OCTA

BOARD OF DIRECTORS

Lisa A. Bartlett
Chairwoman

Tim Shaw
Vice Chairman

Laurie Davies
Director

Barbara Delgleize
Director

Andrew Do
Director

Lori Donchak
Director

Michael Hennessey
Director

Steve Jones
Director

Mark A. Murphy
Director

Richard Murphy
Director

Al Murray
Director

Shawn Nelson
Director

Miguel Pulido
Director

Todd Spitzer
Director

Michelle Steel
Director

Tom Tait
Director

Gregory T. Winterbottom
Director

(Vacant)
Ex-Officio Member

CHIEF EXECUTIVE OFFICE

Darrell E. Johnson
Chief Executive Officer

March 9, 2018

Gentlemen/Ladies:

SUBJECT: Invitation for Bids (IFB) 7-1904
"OC Streetcar Construction Project"

This letter and its Attachments comprise **Addendum No. 7** to the above captioned Invitation for Bids issued by the Orange County Transportation Authority ("Authority").

1) Bidders are advised that questions received by 2:00 p.m. on March 6, 2018 and responses to those questions are presented as Attachment A to this Addendum No. 7. Questions received after this date and time will be responded to in upcoming addenda.

2) Bidders are advised that the answers to Questions Nos. 136 and 157 have been revised. The revised responses are included as part of Attachment A to this Addendum No. 7.

3) Bidders are advised that "Exhibit A – General Conditions" has been revised as follows:

   a. General Condition (GC) 37.9 has been revised in response to Question No. 284.
   b. GC 47.2 has been revised in response to Question No. 284.

   Bidders are advised to delete pages 31, 32 and 43 of "Exhibit A General Conditions" and replace with the revised pages 31, 32 and 43 of "Exhibit A General Conditions", which are presented as Attachment B to this Addendum No. 7.

4) Bidders are advised that "Exhibit A-1 - Special Conditions" has been revised as follows:

   c. Special Condition (SC) 6.8 has been revised to delete references to Temporary Construction Easements for Nova Academy and the Orange County Flood Control District.
   d. Special Condition (SC) 7.2 has been revised in response to Question No. 181.
   e. Special Condition (SC) 26.4 has been revised in response to Question No. 169.

Bidders are advised to delete pages 43-46 ,48, and 114 of "Exhibit A-1 Special Conditions" and replace with revised pages 43- 46 ,48, and 114 of "Exhibit A-1 Special Conditions", which is presented as Attachment C to this Addendum No. 7.

5) Offerors are advised that "Exhibit B-1 Technical Specifications – OC Streetcar (Volume 1)" have been modified as follows:

   f. Technical Specification 34 10 40, pages 2, 4, and 5 - Added requirements to ductbank/walkway concrete panel in response to Question No. 66.

   Bidders are to substitute the above Technical Specification pages of "Exhibit B-1 Technical Specifications – OC Streetcar (Volume 1)" with the revised Technical Specification pages, which is presented as Attachment D to this Addendum No. 7.

6) Bidders are advised to delete in its entirety and replace the following DRAWING Sheets which are presented as Attachment E to this Addendum No. 7:

Sheet	Drawing Number	Title / Description	Dated
262	CP09	Civil Platform Detail	3/8/2018
263	CP10	Civil Platform Detail	3/8/2018
264	CP11	Civil Platform Detail	3/8/2018
265	CP12	Civil Platform Detail	3/8/2018
338	WG01	Water - Key Map Index	3/8/2018
339	WG02	Water - General Notes	3/8/2018
340	WN01	Water Improvement Plan	3/8/2018
341	WN02	Water Improvement Plan	3/8/2018

342	WN03	Water Improvement Plan	3/8/2018
343	WN04	Water Improvement Plan	3/8/2018
344	WN05	Water Improvement Plan	3/8/2018
345	WN06	Water Improvement Plan	3/8/2018
346	WN07	Water Improvement Plan	3/8/2018
347	WN08	Water Improvement Plan	3/8/2018
348	WN09	Water Improvement Plan	3/8/2018
349	WN10	Water Improvement Plan	3/8/2018
350	WN11	Water Improvement Plan	3/8/2018
351	WN12	Water Improvement Plan	3/8/2018
633	DN19	Westminster Bridge – Misc Details	3/8/2018
662	DN48	Santa Ana River Bridge – Girder Details No. 1	3/8/2018
663	DN49	Santa Ana River Bridge – Girder Details No. 2	3/8/2018
664	DN50	Santa Ana River Bridge – Girder Details No. 3	3/8/2018
665	DN51	Santa Ana River Bridge – Girder Details No. 4	3/8/2018
671	DN57	Santa Ana River Bridge – Misc Details	3/8/2018

7) Bidders are advised that the Temporary Construction Easement (TCE) for Nova Academy has been deleted and the TCEs for Orange County Flood Control District (OCFCD) have been replaced by an Encroachment Permit. The following drawings depicting these TCEs, and perhaps others, will be revised in a future Addendum: RN18, CA08, CA24, CA38, CA39, CA40, CN03, CN04. Grading and paver replacement on Nova Academy property will be replaced with installation of a new planter within publically-owned

right-of-way. Bidders are advised that "Exhibit L" is being replaced in its entirety and that the revised "Exhibit L" is being presented as Attachment F to this Addendum No. 7.

8) Bidders are advised that as of the date of this Addendum the following prime contractors, listed in alphabetical order, have been pre-qualified to participate on this IFB:

   - AECOM Energy & Construction, Inc.
   - Flatiron West Inc.
   - Skanska USA Civil West California District Inc.
   - Stacy and Witbeck / Herzog, a Joint Venture
   - Walsh Construction Company II, LLC

   The Authority has completed its review of all timely applications submitted and no other prime contractors will be added to this list.

Bidders are reminded to acknowledge receipt of this **Addendum No. 7** on their "Bid Form". Bidders are advised that all changes addressed in this **Addendum No. 7** shall be incorporated into the final Agreement.

Questions regarding this Addendum No. 7 should be directed to the undersigned at (714) 560-5743.

Sincerely,

Bob Webb
Senior Contract Administrator
Contracts Administration and Materials Management

Attachments
- Attachment A – Questions Received and Authority Responses
- Attachment B – Exhibit A, General Conditions
- Attachment C – Exhibit A-1, Special Conditions
- Attachment D – "Exhibit B-1 Technical Specifications – OC Streetcar
- (Volume 1)
- Attachment E - Drawing Sheets
- Attachment F – Exhibit L Temporary Construction Easements and Private Property Work Requirements

IFB 7-1904 - OC Streetcar Construction Project
Questions Received

Submitted No.	Reference Document(s)				Questions	Response
	Exhibit / Attachment / Spec Section	**Drawing/ Attachment**	**Page Number(s)**	**Paragraph (s)**		
1	Book 1A		Cover Page, Page 4, Page 7		Section I, Subsection E-3a states that questions must be received by 5:00 pm on January 3, 2018. The Book 1A cover sheet states that the Questions/Approved Equal Submittal date is January 10, 2018. Subsection E-4 also states that inquiries received after January 10, 2018 will not be responded to. This deadline is too soon for a number of reasons. The four sections of Book 1 contain over 10,000 pages to review. Multiple subcontractors and suppliers for the MSF building, systems and civil trades also need time to review the same documents, it is not just the prime contractors. Many of these subcontractors and suppliers are small business DBEs that are shut down for the holidays and focusing their estimating efforts on projects bidding sooner. Without an extension to this deadline, they may either decide not to bid this project or to place un-needed contingency in their pricing for items that are unclear. For the reasons stated above, we feel that a more reasonable deadline for questions and approved equals would be February 12, 2018, which is three weeks before the bid date. Please confirm the deadline for clarification and approved equal requests.	Addendum No. 4 to the IFB extended the due date for questions to February 28, 2018
2	Book 1C	OCS Drawings			OCS drawing U-OCSN54 shows the OCS through the Yard and Maintenance Facility. The drawing has a callout for a Y/038 and Y/037 but neither of those callouts are listed in the Pole and Foundation Installation Schedule. Please provide some information as to what Y/038 and Y/037 are supposed to be.	Y/038 and Y/037 are inside the maintenance shop. See details on drawing Z-DD36.

IFB 7-1904 - OC Streetcar Construction Project
Questions Received

Submitted No.	Reference Document(s)				Questions	Response
	Exhibit / Attachment / Spec Section	**Drawing/ Attachment**	**Page Number(s)**	**Paragraph (s)**		
3		OCS Drawings			OCS drawings U-OCSN19, U-OCSN20 and U-OSCN-54 all show the new OCS construction for the WYE Turnback Track. Bid Item 19, Construct WYE Track (Optional), indicates that OCTA may choose to eliminate this bid item which includes the OCS for the WYE Track. Please provide a drawing that shows what is to be constructed (e.g. track, foundations, etc.) if OCTA chooses to eliminate Bid Item 19 so that we may bid accurately.	Bid Item 19 includes track TB-1 and TB-2, Special Trackwork Items 19 (20M Turnout), 20 (No 5 Equilateral Turnout), and 21 (20M Turnout) per drawing TG13, OCS Poles and Foundations Y/026 and Y/027 per drawing U-OCSN54, and OCS wire above track TB-1 and TB-2. If Optional Bid Item 19 is eliminated, a CCO would be written to add straight track to replace Special Trackwork Items 19 and 21, and to add paving to replace track TB-1 and TB-2.
4	Special Condition 53.3				Special Condition 53.3, Measurement and Payment describes what is included in each bid item for payment. Please confirm that Bid Item 47, Traction Power Infrastructure pays for all items outside the actual TPSS Buildings and Bid Item 48, Traction Power Substation, pays for all items inside the TPSS buildings including the building enclosures.	Yes, Bid Item 47 is for items outside of the TPSS Buildings. SC53, Item 47 (b) has been deleted in Addendum No. 5.
5		Z-TN01 & Z-TD02			Please confirm that double restraining rails are required within the MSF Yard in curves of less than 100 ft radius.	Yes, confirmed as shown on TD29 and TD30.
6	Book 1C, Book 2	Z-TN01, TA18, TA19, & TA20	Bid Form, Pg 5 Item 18		Please confirm that the two turnouts that lead to the yard, within the WBT (PS 585+72.32 & PS 594+12.28) are to be included in the Yard Track Item, Item 18.	The turnouts referenced shall be paid for in Item 18, Yard Track.
7	Book 1C, Book 2	Z-TN01	Bid Form, Pg 5 Item 19		Please confirm that all three turnouts shown in the WYE Turnback Track are to be included in the WYE Track Item, Item 19.	Confirmed, these shall be paid for in Item 19 Construct WYE Track

IFB 7-1904 - OC Streetcar Construction Project
Questions Received

Submitted No.	Reference Document(s)				Questions	Response
	Exhibit / Attachment / Spec Section	**Drawing/ Attachment**	**Page Number(s)**	**Paragraph (s)**		
8	Book 1C, Book 2	TA18 & TA20	Bid Form, Pg 6 Item 41		Please note that the Special Trackwork Schedule, TG13, identifies the Crossover at EBT PS 195+69.24 as two individual Turnouts, for which there is no Bid Item. Please confirm that the two crossovers to be included in the 190' Radius Single Crossover Item, Item 41, are; the 14 ft track centers crossover at EBT PS 184+74.64, and the 24 ft track centers crossover at EBT PS 195+69.24.	Correct. Sheet TG13 will be revised in an upcoming Addendum.
9	Book 1C	TA74 & TG13			Is the turnout at YL PS 16+76.42 to be encapsulated?	Turnout at YL PS 16+76.42 does not need to be encapsulated. Drawing TG13 will be revised in an future Addendum to remove the encapsulation requirement of this turnout.
10	Book 2		Bid Form, Pg 6 Item 37		Please identify the scope and location of the work to be included in Item 37.	This item was referencing work that has now been incorporated into item 38. Item 37 will be deleted from the Schedule of Quantities and Prices. The Bid Form will be revised in a future Addendum.
11	Book 2		Bid Form, Pg 6 Item 38 & 42		The quantity in Item 38 seems to be overstated. Please confirm that the quantity in Item 38 is to include the DF on the Bridges as well as the DF on the 9"- 13.5" slab from the Begin Track DF to the Westminster Bridge, and not include the TF of the DF Double Crossover that is included in Item 42. If confirmed; please correct the quantity in Item 38. Please explain the reference to 8" slab in the Item 38 description.	Item 38 will be modified to Track, Direct Fixation Track Slab all thicknesses, and includes direct fixation on bridge decks. This does not include limits of special trackwork which should be included in their appropriate pay items. Quantities will be updated appropriately.

IFB 7-1904 - OC Streetcar Construction Project
Questions Received

Submitted No.	Reference Document(s)				Questions	Response
	Exhibit / Attachment / Spec Section	**Drawing/ Attachment**	**Page Number(s)**	**Paragraph (s)**		
12	Book 1A, Book 2		IFB Pages 75-77, IFB 20-27		The bid forms require bidders to submit a DBE Participation Commitment(s) Form and Bidders List. Bidders are also encouraged to submit Good Faith Efforts. Section 4.2 of the IFB (page 75) states that the Bidders List must be included with the bid submission. Primes will be receiving hundreds of quotes from subcontractors and suppliers for this project. It is unrealistic to expect primes to receive competitive quotes and submit information for every quote received and documentation of good faith efforts at bid time. For this reason, other agencies such as Caltrans extend the deadline for DBE Good Faith Effort documentation and other forms such as the bidders list to 4:00 PM on the 5th working day after the bid opening. Please consider a similar deadline for this project.	Good Faith Efforts, DBE Participation Commitment letters and Bidders Lists must be received by the AUTHORITY no later than 4:00 pm on the 2nd business day after bid opening if they are not submitted with the bid.
13	Book 1C	TD05			TD05 in Vol 1 of Book 1C shows a reinforced concrete curb wall and a reinforced concrete slab beneath the DF plinths. We are assuming this is paid for under bid item 60 - Retaining Walls and not bid item 35 - Track, Embedded Track. Please Confirm.	DF track and upturned curb should be paid as part of Item 38.
14	Book 1C	NS01, NS02			NS01 and NS02 in Vol 3 of Book 1C show 4" Asphalt beneath the ballasted track. We are assuming this work is paid for under bid item 60 - Retaining Walls and not bid item 36 - Track, Ballasted Track. Please Confirm.	The Asphalt cap beneath the ballasted track is paid for under Item 36 Track, Ballast Track
15	IFP 7-1904 Cover & IFP 7-1904 Contract			Sec I Instruction to Bidders (F)Submission of Bid (1) Date and Time	Bid Submittal Date: “Bids must be submitted at or before 11:00 a.m., March 5, 2018” – We respectfully request moving the bid submission date to a Tuesday, Wednesday or Thursday as Monday's can lead to issues with coordination of subcontractors and suppliers based on past experience and the amount of documentation that is required with this bid package and DBE information at time of bid.	Bid due date changed to Friday, April 27th via Addendum No. 3

IFB 7-1904 - OC Streetcar Construction Project
Questions Received

Submitted No.	Reference Document(s)				Questions	Response
	Exhibit / Attachment / Spec Section	**Drawing/ Attachment**	**Page Number(s)**	**Paragraph (s)**		
16	IFP 7-1904 Cover & IFP 7-1904 Contract			Sec I Instruction to Bidders (E) Clarifications of Specifications and Approved Equals (4) Authority Responses	Per the contract documents "Inquiries received after 5:00 p.m. on January 10, 2018, will not be responded to." however the bid submission date is more than 7-weeks past this date. In an effort to avoid post project award issues and due to the timing of this bid request for proposal, we respectfully request that this date be moved to 3-weeks of bid opening to allow for a full evaluation of all contract documents.	Addendum No. 4 to the IFB extends the due date for questions to February 28, 2018
17	IFB 7-1904 Contract			Sec I Instruction to Bidders (E) Clarifications of Specifications and Approved Equals (3) Submitting Request (a)	Per the contract documents "All request for approved equals, clarifications of specification, or request must be in writing and must be received by the Authority no later than 5:00 p.m., on January 3, 2018." Due to the holidays and ability to provide ample time to review and acquire services and goods that may provide value to all stakeholders, we respectfully request that an extension of this date to February 1, 2018.	Addendum No. 4 to the IFB extends the due date for questions to February 28, 2018
18	IFB 7-1904 Contract DBE Participation Commitment(s) Form PDBE INFORMATION - GOOD FAITH EFFORT			Sec II Instruction to Bidding Forms (K) Disadvantage Business Enterprise DBE Participation Commitment(s) Form Bidders List DBE Information – Good Faith Efforts	Per the contract documents all DBE Good Faith Effort and DBE Participation Comments are due at time of bid. We are respectfully requesting a 96 hour extension to accurately compile the data and reduce the potential protest that may occur due to minor errors. This documentation typically is not complete in it's entirety and/or in a timely manner during the bid closing period.	Good Faith Efforts, DBE Participation Commitment letters and Bidders Lists must be received by the AUTHORITY no later than 4:00 pm on the 2nd business day after bid opening if they are not submitted with the bid.
19	Prequalification Documents				Will the Authority release all submitted prequalified subcontractors for use by all prime contractors use during the project bidding period?	No, the AUTHORITY will only release the names of prequalified prime contractors.

IFB 7-1904 - OC Streetcar Construction Project
Questions Received

Submitted No.	Reference Document(s)				Questions	Response
	Exhibit / Attachment / Spec Section	**Drawing/ Attachment**	**Page Number(s)**	**Paragraph (s)**		
20	Prequalification Documents				Will the Authority allow the use of alternate prequalified subcontractors which were prequalified with other prime contractors post bid award to construct the project?	No.
21	IFB 7-1904 General Conditions	GC-9 Hazardous Materials			Please clarify if the Authority will be identified as the generator and sign all manifest for all pre-existing hazardous waste encountered on the project? In addition, please clarify if the Authority will maintain a hazardous waste agreement through the project duration in order to expeditiously remove all such waste encountered and minimize potential delays?	The AUTHORITY or cities, will be identified as generator for and sign manifests for pre-existing hazardous waste encountered within the project limits. The Contract Special Conditions will be revised to provide specific information for AUTHORITY or cities Hazardous Waste representatives.
22	IFB 7-1904 Contract and GC-41			Sec I Instruction to Bidders (E) Clarifications of Specifications and Approved Equals (3) Submitting Request (a) AND GC-41 Product Options, Supplier Approval, and Substitutions	Per the contract documents, all requests for approved equals, clarifications of specification, or request must be in writing and must be received by the Authority no later than 5:00 p.m., on January 3, 2018." and "As required by California Public Code such request shall be made within thirty-five (35) calendar days from date of notice to proceed with Construction in order to receive consideration, unless submission of a request is agreed to by the Authority." We respectfully request that these 2 requirements are modified to allow the contractor to provide alternative materials, within a respectable time period prior to the start of said work, throughout the contract duration. In addition, these two sections are contradicting and require clarification on which statement will be considered to set precedence during the bidding period.	The IFB provides for two distinct timeframes and processes for product substitution. During the bidding period, if the bidder wishes to receive AUTHORITY's approval of substitution(s) prior to submission of bid, then the bidder should adhere to the deadline indicated by the AUTHORITY. Postaward requests are covered in GC-41. No change in requirements.

IFB 7-1904 - OC Streetcar Construction Project
Questions Received

Submitted No.	Reference Document(s)				Questions	Response
	Exhibit / Attachment / Spec Section	**Drawing/ Attachment**	**Page Number(s)**	**Paragraph (s)**		
23	IFB 7-1904 Bid Book		Bid Form Page 2, Item Number (12)		Per the contract documents the "Bid will be in effect for 180 calendar days after the bid closing date." Please clarify when the Authority will issue LNTP and NTP. In addition, please clarify the timeline for on-site work activated to commence.	Per Addendum No. 3, the bid opening is scheduled for 4/27/18. OCTA Board Approval to Award is anticipated for 6/25/18. The Limited Notice to Proceed described in Special Condition (SC) 4.2.1 is expected to be issued in August 2018. There are several items described in SC 4.2.2 that must be submitted and approved prior to OCTA issuing the Notice to Proceed with Construction. As stated in SC 4.2.2, it is OCTA's intent to issue it within 60 days.
24	General Conditions Article 11			Article 11 Insurance, (A)	Article 11.A, indicates that any self-insured retention above $50K must be approved by the Authority. Please modify this section to remove the self-insured maximum limit.	No, the requirement will remain. Approvals for self-insurance will be promptly considered.
25	General Conditions Article 11			Article 11 Insurance, (A) Item Number (1)	Article 11.A.1. General Liability states the following: limits of $5,000,000 occurrence / $20,000,000 aggregate. Please clarify that this can be meet through a combination of primary and excess insurance as it is not commercially available as a primary policy.	Yes, the limits can be met with a combination of primary and excess insurance.
26	General Conditions Article 11			Article 11 Insurance, (A) Item Number (1)	Article 11.A.1. General Liability states the following: b. Indicates the policy not exclude coverage for inverse condemnation. We are respectfully requesting that this portion of the requirements are removed from the contract requirements as it is not applicable to coverage of property damage and non-typical for general liability coverage as this is not commercially available.	This is not a standard exclusion under commercial general liability. No change.

IFB 7-1904 - OC Streetcar Construction Project
Questions Received

Submitted No.	Reference Document(s)				Questions	Response
	Exhibit / Attachment / Spec Section	**Drawing/ Attachment**	**Page Number(s)**	**Paragraph (s)**		
27	General Conditions Article 11			Article 11 Insurance, (A) Item Number (1) (a)	Article 11.A.1.(a) states the following: (a) the workers comp and employers liability exclusion should only apply to the policyholder. We respectfully request this section be removed from the requirements, as described below it is not needed. 1. The Work Comp exclusion is written so it only applies to the insured under a workers' compensation, disability benefits or unemployment compensation law or any similar law. That will not be amended, the policy will cover any insured s obligation to cover these benefits. 2. The employers liability exclusion eliminates coverage for an insured with respect to that insured's employees. The exclusion does not apply to liability assumed by the insured under an "insured contract". So when the Contractor assumes the project owner's liability exposure in connection with injury to the Contractors employees, the Contractor will be obligated to pay any damages awarded to the injured employee as a result of the employee's suit against the owner. 3. The requested changes are due to the prescribed coverage(s) which are not commercially available.	In California, workers compensation and employers liability are the exclusive remedy for workplace injuries. Therefore, a commercial liability policy would not provide coverage and an exclusion is appropriate.
28	General Conditions Article 11			Article 11 Insurance, (A) Item Number (1) (b)	Article 11.A.1.(b) indicates that "no other endorsements" may be included. That is not possible. Exclusions for such items as Pollution, asbestos, silica, employment practices , etc. are added to the policy. We respectfully request that this requirement be removed from the project requirements.	This Article has been been amended in Addendum No. 6 so that other endorsements will need to be approved by the AUTHORITY.
29	General Conditions Article 11			Article 11 Insurance, (A) Item Number (4) (a)	Article 11.A.4. (a) indicates that the Builder's Risk insurance is maintained until "final acceptance". We are respectfully requesting that this section is modified to reflect "substantial completion." Final acceptance could be construed to include minor construction activities and/or the warranty period and will bear additional unwarranted cost to the Authority.	No change to the requirement.

IFB 7-1904 - OC Streetcar Construction Project
Questions Received

Submitted No.	Reference Document(s)				Questions	Response
	Exhibit / Attachment / Spec Section	**Drawing/ Attachment**	**Page Number(s)**	**Paragraph (s)**		
30	General Conditions Article 11			Article 11 Insurance, (A) Item Number (5)	Article 11.A.5. states the following: “The CPL shall not contain any provision or exclusion that would bar or otherwise preclude any insured or additional insured from making a claim that would otherwise be covered by the CPL”. Please clarify that the intent of this statement is to allow an additional insured (the Authority) to make a claim against the Contractor and have the policy respond without an insured vs insured exclusion.	Confirmed.
31	General Conditions Article 11			Article 11 Insurance, (A) Item Number (7)	Article 11.A.7. states the following: “Allocated Loss Expense must be in addition to all policy limits for coverage referenced above”. The Professional and Cyber policies required will not loss expense as part of the limit and not in addition to the limit. We respectfully request that this statement be removed from the contract requirements as it is not relevant and not commercially available.	This Article has been amended in Addendum No. 6 to allow exceptions for claims made policies.
32	General Conditions Article 11			Article 11 Insurance, (A) Item Number (7)	Article 11.A.7. states the following: “Not more frequently than once every five years". Please clarify the intent of this statement as it is unclear?	This phrase has been deleted in Addendum No. 6.
33	General Conditions Article 11			Article 11 Insurance, (A) Item Number (8)	Article 11.A.8. states the following: the "subcontractors maintain insurance coverage in the same amounts required of CONTRACTOR herein”... We respectfully request that this statement be removed. Subcontractors will not have limits that meet these spec as regard to General Liability and Pollution and most will not carry Professional and Cyber Liability. IF this unusual coverage can be obtained by the subcontractors, it will add additional unnecessary financial burden to all stakeholders and not commercially available.	No change to the requirement.
34	General Conditions Article 11			Article 11 Insurance, (B) Item Number (3)	Article 11.B.3. requires 30 day notice of cancellation. We are requesting that the following statement be modified by adding "10 days if for nonpayment of premiums."	Accepted. This Article has been amended in Addendum No. 6 to add "10 days if for nonpayment of premiums."
35	General Conditions Article 11			Article 11 Insurance	Please clarify if this contract is subject to California Code, Public Contract Code, Section 7105 as it is unclear?	At this time, the AUTHORITY does not have any planned debt issuances associated with the OC Streetcar.

IFB 7-1904 - OC Streetcar Construction Project
Questions Received

Submitted No.	Reference Document(s)				Questions	Response
	Exhibit / Attachment / Spec Section	**Drawing/ Attachment**	**Page Number(s)**	**Paragraph (s)**		
36	General Conditions Exhibit A Section 2.2.1 Other Insured Entities			Special Conditions SC-2 Indemnifications and Insurance 2.2.1	Employers liability can NOT have additional insureds. Please delete this requirement as it is not commercially available.	The AUTHORITY is not requiring additional insured endorsements for Workers Compensation and Employers Liability.
37					Currently the documents require that the Good Faith Efforts (GFE) and the complete Bidders List (all firms that bid, propose or quote to the primes) are due at the time of bid. We are requesting that for this pursuit the Owner allows these documents to be submitted within 3 or 4 business days after the submission of the bid. Allowing these documents to be submitted after the bid date is industry standard and requiring them to be submitted at time of bid puts an incredible burden on the Contractors that can result in responsible bidders from not being able to provide the Owner with the lowest price possible.	Good Faith Efforts, DBE Participation Commitment letters and Bidders Lists must be received by the AUTHORITY no later than 4:00 pm on the 2nd business day after bid opening if they are not submitted with the bid.
38					Currently the documents require that the DBE commitment letters be signed and submitted at time of bid. We are requesting that for this pursuit the Owner allows these letters to be submitted within 3 or 4 business days after the submission of the bid. Due to the variability of how subcontractor and suppliers provide their numbers to Contractors, scopes may adjust during bid close-out, resulting in different values from subcontractors and suppliers that would need to submit these commitment letters making it impractical to have them due with the bids.	Good Faith Efforts, DBE Participation Commitment letters and Bidders Lists must be received by the AUTHORITY no later than 4:00 pm on the 2nd business day after bid opening if they are not submitted with the bid.
39					Currently the deadline for questions to the Owner is Wednesday, January 10th 2018 at 5pm PST. Due to the magnitude of documents provided with this RFP it is requested that the questions deadline be extended 3 to 4 weeks to allow sufficient time for Contractors, Subcontractors and Vendors to discover and submit questions that arise during the review of the documents.	Addendum No. 4 to the IFB extends the due date for questions to February 28, 2018

IFB 7-1904 - OC Streetcar Construction Project
Questions Received

Submitted No.	Reference Document(s)				Questions	Response
	Exhibit / Attachment / Spec Section	**Drawing/ Attachment**	**Page Number(s)**	**Paragraph (s)**		
40					In the document "IFB 7-1904 Add 1 Att D IFB Book 1A revised.pdf" that was issued in addenda 1, on page 15 of the pdf (Section I. Instructions to Bidders E-3.a) it states that all requests… must be received by the Authority no later than 5:00pm on January 3, 2018. On the cover sheet of the same document it states that Questions/Approved Equal Submittal is due by January 10, 2018. Please confirm that the deadline for Questions and Approved Equal Submittals is January 10, 2018 at 5:00pm PST.	Addendum No. 4 to the IFB extends the due date for questions to February 28, 2018
41	Book 1A, Book 1C				GC-47 and SC-33 describe that the contractor is required for all project Quality Control, including all testing and inspection. Drawing ZDG02, Structural Observation, specifically items 2 and 3 note that structural observation shall be by a registered engineered employed by the Owner, and independent of the contractor. Please clarify who is responsible for all testing, inspection, and structural observation at the Maintenance and Storage facility.	The Contractor shall provide all Testing & Inspection as required by the contract documents. Owner may provide additional independent Inspection, but this does not relieve the Contractor of its duty to provide these services. Structural Observation shall be provided by the Owner, but this does not relieve the Contractor of its duty to provide specified Structural Inspection & Testing.
42	Book 1C	ZCN03, ZDD15, TA72, TA74, TD12, ZTN01			Drawing ZCN03 indicates that (concrete) embedded tracks extend from the MSF building to the zone of asphalt paving. Section 3 on drawing ZDD15 indicates that the track becomes ballasted at the end of the building apron, supported by 10' approach slabs. Drawings TA72 and TA74 clearly indicate the transition from embedded to ballasted, approximately corresponding to drawing ZCN03. Drawing TD12 details a transition from embedded to ballasted, using a 20' approach slab. Please confirm where the tracks in the yard convert from ballasted to embedded. Please confirm the proper track section for the embedded portion (2 and 3/ZDD15, or something else)? Please confirm the intended transition detail for the yard (ZDD15, or TD12).	The track transitions from ballasted to embedded at the locations shown on TA72 and TA74. The embedded track section at the transition from ballasted to embedded track shall be per A/TD-12. The track slab section at the building apron shall be per 2/Z-DD15. There are no transition slabs for the transition from ballasted and embedded track within the MSF. TD-12 is applicable to mainline track only. Z-DD15 will be revised for clarification in an upcoming Addendum.

IFB 7-1904 - OC Streetcar Construction Project
Questions Received

Submitted No.	Reference Document(s)				Questions	Response
	Exhibit / Attachment / Spec Section	**Drawing/ Attachment**	**Page Number(s)**	**Paragraph (s)**		
43	Book 1C, Volume 4, 2	Z-CN01			Note 1 on the reference drawing states, "site demotion: existing structures, recycling facility, associated equipment, and pavement surfaces will be removed by others". Note 3 on this same drawing states, "contractor to remove all existing structures, obstructions, foundations, and utility services on this site". Please confirm the scope and method of payment of contractor demolition within the limits of the VMSF site.	Note 1 on Z-CN01 will be deleted in a future Addendum. It is possible that one or both of the property owners will remove existing structures, equipment, and/or pavement. In addition, OCTA is developing a separate demolition contract. If neither of these occur, Optional Bid Items 11-14, which are allowances, will be used for demolition.
44	Book 1A Special Conditions Book 1C, Volume 1	FG03	Special Conditions Page 18, Section 6.3.4		Section 6.3.4 of the special conditions summarizes the sub segments for Segment 2. The sub segments do not match the Traffic Control Plans as depicted on FG03. Please confirm that Segment 2 has two sub segments as shown on FG03.	Section 6.3.4 has been revised to be consistent with FG03 in Addendum No. 5.
45	Book 1A Special Conditions Book 1C, Volume 1	FG05	Special Conditions Page 22, Section 6.3.7		Section 6.3.7 of the special conditions summarizes the sub segments for Segment 5. The sub segments and their sequencing do not match the Traffic Control Plans as depicted on FG05. Please confirm that Segment 2 has three sub segments as shown on FG05.	Section 6.3.7 is correct. Drawing TG05 will be updated to be consistent in a future Addendum.
46	Book 1A Special Conditions		Special Conditions Page 17, Section 6.3.3		Section 6.3.3 of the special conditions states that closures may occur during weekends with appropriate detours in place for the Fairview Street and 5th Street grade crossings. Intersection closure hours can not be found. Please provide closure hours or confirm that closures will be allowed from 10 PM Friday night to 5 AM Monday morning.	Yes, where it says "weekend" it means 10 PM Friday to 5 AM Monday. This has been added to Section 6.3.3 in Addendum No. 5.
47	Book 1A Special Conditions		Special Conditions Page 19, 20, 21, 22		Sections 6.3.4, 6.3.5, 6.3.6 and 6.3.7 state that closures of major intersections in Segments 2, 3, 4 and 5 will be limited to night work between the hours of 10 PM and 5 AM. Please consider allowing weekend closures from 10pm Friday night to 5am Monday morning for major intersections instead of limiting them to 7 HRS at night. This will minimize disruptions to the public, improve schedule and eliminate unnecessary expenses.	We confirm that closures of major intersections will be limited to night work between the hours of 10PM to 5AM.

IFB 7-1904 - OC Streetcar Construction Project
Questions Received

Submitted No.	Reference Document(s)				Questions	Response
	Exhibit / Attachment / Spec Section	**Drawing/ Attachment**	**Page Number(s)**	**Paragraph (s)**		
48	Book 1A Special Conditions Book 1C, Volume 1		Special Conditions Page 19, 20		FG04 depicts the work required at the intersection at Mortimer St and 5th St in Segment 3, Stage 3. FN41 shows this intersection as a non-active zone with traffic crossing through it. Although this intersection is listed within the limits of Segment 3C on Page 19, we find no mention of this intersection being defined as minor or major as listed on page 20. We are assuming this is an error and that the intersection of Mortimer St and 5th St will be considered at a temporary partial intersection closure (minor). Please confirm.	Special Condition 6.3.5 bullet starting with "Temporay partial intersection closures will be allowed at minor intersections" has been expanded to say "on Mortimer Street at 4th, 5th, and 6th Streets" in Addendum No. 5.
49	Book 1C		ZCD04		Drawing ZCD04 notes a standing seam metal roof on the trash enclosure, but we find no specification for this roofing system. Please provide a specification for standing seam metal roofing.	A specification will be provided for the standing seam roof in an upcoming Addendum. Standing seam metal roof shall also be provided over the metal deck on the train washer canopy.
50	Book 1C		ZCD04		Drawing ZCD04 notes to see structural drawings for the roof-supporting beams of the trash enclosure, but we find no details in the structural drawings. Please indicate the plan sheet containing this information.	A drawing revision will be provided in an upcoming Addendum to clarify the detail.
51	Book 1C		ZCD04		Drawing ZCD04 notes that the trash enclosure roof is supported by metal decking, but we find no information to indicate depth or gauge. Please provide this information	A drawing revision will be provided in an upcoming Addendum to clarify the detail.
52	Book 1C		ZPN42; ZPS32		Drawings ZPN42 and ZPS32 note that the car wash equipment room has insulated roof metal panels over metal decking, but the main wash bay just notes metal decking. Is there a roofing system over the metal decking on the wash bay? If so, please specify.	A specification will be provided for the standing seam roof in an upcoming Addendum. Standing seam metal roof shall also be provided over the metal deck on the train washer canopy.
53	Book 1C		UCOMN13; ZBD03		Drawing UCOMN13 notes that panel CP1A is a 100A panel, fed from a UPS powered by branch panel UP1A, but the panel schedule on ZBD03 for panel UP1A shows only a 20A circuit (46) for “CP-1”. Please clarify the source of power for panel CP1A.	The correct source of power to the UPS is Panel “SBP-1A” Circuit #1, 20A,3P located within Tele/data Rm. Refer to Schedule drawing ZBD-04. Circuit #46 in UP-1A pertains to a different load. UCOMN13 will be revised in an upcoming Addendum to reflect source panel SBP-1A.

IFB 7-1904 - OC Streetcar Construction Project
Questions Received

Submitted No.	Reference Document(s)				Questions	Response
	Exhibit / Attachment / Spec Section	Drawing/ Attachment	Page Number(s)	Paragraph (s)		
54	Book 1A		Special Condtions Pages 62, 143		Section 14.1 of the special conditions states for all soil excavation in the PE ROW, the top 1' of excavation shall be stockpiled and tested prior to disposal. Section 53.4 of the special conditions states that Bid Item 15 includes all investigation, testing and excavation of Contaminated Soils if encountered within the PE ROW. Please confirm that the removal, stockpiling and testing of the top 1' as stipulated in Section 14.1 will be paid as part of the Bid Item 15 allowance.	Section 53.4 of the Special Conditions Bid Item 15 has been revised in Addendum No. 5 to read as "Removal and Disposal of Contaminated Soils". The Bid Form will be revised in a future Addendum. The description for this bid item has also been revised as follows: "a. The Work of this item includes investigation, testing and excavation for Contaminated Soils if encountered within the limits of OCTA-owned property within the PE ROW and public ROW, removal, transporting and disposal of Contaminated Soils at a permitted TSD facility including permitting efforts and permitting fees required for disposal and all other costs associated to the testing, removal, and disposal of the materials, as directed by the AUTHORITY. b. Measurement: Allowance c. Payment: This item will be paid for on Force Account in accordance with GC-60 as authorized by the Engineer."
55	Book 1C, Volume 2	SN09			The plans call for 28.22' of 8" PVC pipe heading north from a manhole at CL station 49+46.37. The line looks to extend north of the WBT by 5'. This would be a total of 46' of 8" PVC pipe. How many feet of 8" PVC pipe is to be installed heading north of the manhole at CL station 49+46.37 and please provide connection detail?	The lateral called out at 49+46.37 is incorrect. A revision to drawing SN09 to be issued in a future Addendum will show the correct lateral and length of pipe. Connection detail shall be per City of Santa Ana Std Plans 1204 and 1204A.
56	Book 1C, Volume 2	SN11			The plans call for 6" VCP SS to be extended to the north and south of the manhole at CL station 17+15.28. The plans also show the existing pipe to be 8" VCP. What size of pipe should be installed at this location?	Existing pipe verified to be 8". SN11 will be changed in a future Addendum to change 6" VCP SS as noted to be 8" to match existing.

IFB 7-1904 - OC Streetcar Construction Project
Questions Received

Submitted No.	Reference Document(s)				Questions	Response
	Exhibit / Attachment / Spec Section	**Drawing/ Attachment**	**Page Number(s)**	**Paragraph (s)**		
57	Book 2	Bid Form, Pg 5 & 6 Item 18 & 36			The quantity in Item 36 seems to be very overstated. Please confirm that the quantity in Item 36 is to include the Ballasted Mainline Track only, without the footage within the special trackwork, and not including the Yard Lead (Yard Lead in Item 18 per Item 18 Measurement & Payment). If confirmed; please correct the quantity in Item 36.	Ballasted trackwork does not include special trackwork limits or limits for yard lead, quantity will be confirmed and updated as required. Bid Item 36 will be revised in a future addendum.
58	Book 1C, Volume 2 Book 1B, Exhibit B-1 02 41 12 Book 1D, Exhibit M-4	RN11 to RN17			Drawings RN11 to RN17 depict the limits of existing railroad ties and ballast located under asphalt along W Santa Ana Blvd. 1) For bidding purposes, please confirm that bidders are to assume that the existing rail has already been removed and if encounter, removal of rail, spikes and accessories will be paid for under Item 23 - Removal of Buried Man Made Objects. 2) The notes in Table 1 of Exhibit M-4 show RR ties encountered with petroleum odor...along this location. If the existing ties, ballast and underlying soils contain creosote preservative, or any other contaminates, please confirm that theinvestigation and removal will be paid for under Item 23 - Removal of Buried Man Made Objects. 3) Specification 02 41 12 -3.13 states that leaving existing ballast in place is acceptable based on approval of the qualified geotechnical professional. For bidding purposes, please confirm that existing ballast can remain in place. 4) Is the investigation and removal of existing non-contaminated railroad ties within 2 feet of the bottom of excavation paid for under Item 23, or is it considered incidental to other items of work? If it is incidental to the other items of work, can OCTA provide the number of tracks and tie spacing in this location that bidders should use?	1) If encountered, removal of rail and spikes would be paid for under Bid Item 23, Remove Buried Man Made Objects. 2) If encountered, removal of treated ties would be paid for under Bid Item 15, and removal of underlying contaminated soils would be paid for under Bid item 15. 3) If the geotech directs the removal of the ballast material below the proposed excavation, it would be paid for under Bid Item 23. If it is found to be contaminated, it would be paid for under Bid Item 15 4) If non-contaminated ties are encountered, removal would be paid for under Item Bid Item 23. SC 53, part 15, and bid item description for Bid Item 15 will be revised in a future Addendum so that it is clear that Treated Wood Waste will be paid for under Bid Item 15. The Bid Form will be revised in a future Addendum.
59	Book 1C, Volume 2 Book 1B, Exhibit B-1 02 41 12				Drawings RN03, RN05 and RN06 depict general outline of where timber piling may be buried. Specification 02 41 12-3.12 states to remove any trestle pile at least 2' below the bottom of the proposed excavation. Please confirm that if encountered, the investigation and removal will be paid for under Item 23 Removal of Buried Man Made Objects.	If encountered, the indentification, excavation, removal, and disposal of existing buried timber piles would be paid for under Bid Item 23, Remove Buried Man Made Objects. If timber piling is determined to be Treated Wood Waste, then it will be paid for under Bid Item No. 15.

IFB 7-1904 - OC Streetcar Construction Project
Questions Received

Submitted No.	Reference Document(s)				Questions	Response
	Exhibit / Attachment / Spec Section	Drawing/ Attachment	Page Number(s)	Paragraph (s)		
60					Specification Section 27 01 60, 3.02 General Software Requirements, A, 3-8 lists interfaces to OCTA systems, please identify each interface or provide the OCTA API for review?	To be answered in a future Addendum.
61					**Traffic Signals** Within IFB 7-1904 Book 1C Sheets XN1 – XN 23 (sheet numbers 417 – 439/1520), there is a callout to referenced plans designated XN24, XN25, XN26, XN27- XN33. These plans are not attached with project plans. Can the Authority please provide a copy of those plans which are needed to facilitate the required fiber optic modifications that are stipulated at each traffic signal intersection?	These drawings will be provided in an upcoming Addendum.
62					Street Lighting IFB 7-1904 BOOK 1B-TECHNICAL SPECS-SECTION 26 56 13 ITEM C.3 dictates for the street lighting that work, products, and materials shall conform to City of Santa Ana Standard Plans. Note Standard Plan No. 1126A thru I which pertain to street lighting are unavailable for downloading from their web site due to they are being revised by the city at this time. Can these plans please be provided?	Revised City of Santa Ana Street Lighting Standard Plans have been included in Addendum No. 5 in Exhibit S, Standard Plans.
63					Addendum No. 3, issued on Thursday, January 4, 2018, has pushed the bid date of the OC Streetcar project to April 27, 2018. If this push of the bid date is due to the Authority anticipating that large changes are going to occur with the specifications and plans that necessitate such an extension, it would be a great benefit to the bidding Contractors if the Authority is able to indicate what major items of work/scopes or locations are more likely to be altered in the future. This will allow Contractors to more efficiently allocate resources and efforts on the areas/scopes or locations that are not as likely to undergo major changes.	The change in bid date was not due to large changes coming to the specifications and plans. There are changes being made to traffic signals, signs, and pavement markings resulting from California Public Utilities Commission comments, changes to the MSF and TPSS resulting from comments coming from the City of Santa Ana Development Review, and changes to the Orange County Sanitation District Sewer.
64					Plan Sheets DN49 & DN50, Section Details A & B call out Ducts for top Strands and says “See Temporary Top Strand Layout”. I am unable to find the “Temporary top strand layout” sheet or information. Can you please clarify what this is for and the duct size?	The Temporary Top Strand Layout detail is not needed. The drawings will be revised in a future addendum to remove reference to the Temporary Top Strand Layout.
65					For the Insert assembly shown on DN51, is there a spec or bolt grade required?	For Insert Assembly shown on DN51, please refer to Technical Specification Section 05 60 00 – “Miscellaneous Metal Fabrication”.

IFB 7-1904 - OC Streetcar Construction Project
Questions Received

Submitted No.	Reference Document(s)				Questions	Response
	Exhibit / Attachment / Spec Section	Drawing/ Attachment	Page Number(s)	Paragraph (s)		
66					Plan sheet DN57, detail 2 calls out “Precast Concrete Panel with Non-Skid Surface (Weight Limited to 75lbs per piece)” Can you please provide additional information, dimensions, attachment method, Non-skid surface design or requirements, ect?	"Specification 34 10 40 Precast Concrete Panels provides design requirements for panels. It is intended that width and thickness of panel be selected as part of the design by the contractor. A revision to the specification will be added in an upcoming Addendum to clarify the non-skid surface. The revisions to Item 1 in Section 2.02 of the Section 34 10 40 – “Precast Concrete Panel-Structural” will state: “The non-skid surface shall conform to the requirements in Section 51-1.03E(6), “Nonskid Abrasive Finish” of the 2015 Caltrans Standard Specifications.” The panels are intended to be set into place such that the panel(s) can be removed to access the duct bank. A revision to the drawings showing a method of transverse restraint (a shear tab on the underside of the precast panel) will be shown in a future revision."
67					Can we please get further clarification where the bonding details on sheet U-TSN38 are used? Some details call out specific locations and others don’t and the signal layout plans do not show I-bonds on the drawings.	The bonding details on U-TSN38 without specific locations are shown as possible installation options. All required information can be found in single line plans, and the information about impedance bonds is shown in U-TSN038 (details 6 and 7 contain all required information about all impedance bonds for the four signal interlockings).

IFB 7-1904 - OC Streetcar Construction Project
Questions Received

Submitted No.	Reference Document(s)				Questions	Response
	Exhibit / Attachment / Spec Section	**Drawing/ Attachment**	**Page Number(s)**	**Paragraph (s)**		
68	Special Conditions 6.6.1				Special Condition 6.6.1 makes the Contractor responsible for all utility service fees (design, engineering, impact, connection, etc.) from a multitude of utility providers (SCE, SCG, COGG, COSA). The cost of these types fees is highly variable, depending on the existing infrastructure as well as previous coordination and/or memorandums of understanding (MOUs), and are sometimes indeterminate until final engineering and design is complete. The points of connection are missing for all the SCE electrical services, which will greatly impact cost depending on their actual location. Some third party utilities are also unwilling to comment on fees at this time due to the multitude of unknowns. In order to avoid contractors adding contingencies to their bids, please consider creating an allowance item for all such utility-assessed fees.	Coordination with the Utlity Companies is ongoing. Since complete and comprehensive service locations and fees are not currently available, a Utility Service Fee Bid Item Allowance will be added to the Schedule of Quantities and Prices and SC-53 will be updated to describe what is covered by this Allowance Bid Item. Related to the points of connection, please reference the paragraphs in SC-6.6.1 which immediately follow each Utilty Service and Meter Table for contractor instructions on how to base its bid for this Work. The Bid Form will be revised in a future Addendum.
69	Special Conditions 6.6.1				Special Condition 6.6.1 makes the Contractor responsible for all utility service coordination (timing, performance, etc.). In order to responsibily bid this project, we need to understand what previous coordination has occurred, and the terms of any Memorandums of Understanding (MOUs). Please provide information on previous coordination, MOUs, and any commitments made by the various utility providers in support of this project.	The AUTHORITY is in the process of applying for all utility services and will complete the service applications in accordance with exhibit J-10 New Service Matrix and the Service Request Exhibits. The AUTHORITY has carried out several utility service coordination activities in preparation for the subject construction contract, including but not limited to the following: Regular and ongoing coordination meetings with all-known Utility Owners that are impacted by Project implementation; Utility Potholing by the Designer and Utility Owners, Utility Relocation Designs by the Designer and Utility Owners, and preparation of service applications. The AUTHORITY is prepared to assist CONTRACTOR in the Project's utility service coordination activities during the construction phase of the Project. However, this does not relieve the CONTRACTOR of the responsibilities identified in the Contract Documents.

IFB 7-1904 - OC Streetcar Construction Project
Questions Received

Submitted No.	Reference Document(s)				Questions	Response
	Exhibit / Attachment / Spec Section	**Drawing/ Attachment**	**Page Number(s)**	**Paragraph (s)**		
70		NN08, NN11	685, 688		At the following wall drawings and locations, the footing elevation callouts do not match the elevations shown on the drawings: Drawing NN08, Wall 144 - elevation callouts at 11+50, 12+72, 13+08 Drawing NN11, Wall 553 - elevation callout at wall station 10+24 Please advise the correct elevation for each location.	1) Retaining Wall 144, top of footing call out on the plans from beginning of wall (Wall LOL STA 10+00) to the end of the first 14' tall wall (Wall LOL STA 12+88.0) is labeled correctly at elevation 86.5'. The top of footing drawn on the developed elevation view was not properly scaled and will be adjusted in a future Addendum. 2) Retaining Wall 153, top of footing elevation call out of 94.0' will be adjusted to elevation 93.5' between Wall LOL STA 10+00 and 10+50. The wall design height is not adjusted by this change (Design Height is still H=12'). The top of footing drawn on the Mirrored Developed Elevation was not properly scaled and will be adjusted in a future Addendum.
71	ITB, GC-41		1,3,4,44		Regarding Approved Equal requests/substitutions, GC-41 states, "as required by the California Public Contracts Code such request shall be made within thirty-five (35) calendar days from the date of the Notice to Proceed." However, a Key IFB date as modified by Addendum 2 requires "all requests for approved equals . . .must be received . . .February 7, 2018." Please confirm that February 7, 2018 is the deadline for substitution/approved equal requests for which the Authority will provide a determination before the bid date, but that substitution requests will still otherwise be accepted up to 35 days after NTP.	The IFB provides for two distinct timeframes and processes for product substitution. During the bidding period, if the bidder wishes to receive AUTHORITY's approval of substitution(s) prior to submission of bid, then the bidder should adhere to the deadline indicated by the AUTHORITY, as modified by Addenda. Postaward requests are covered in GC-41.
72		U-OCSN03, U-OCSD68			OCS layout plan drawing U-OCSN03 shows one down guy foundation that is shared for 1W/200 and 1W201. Down guy foundation installation schedule on drawing UOCSD68 shows a separate down guy foundation for 1W/200 and 1W/201. Both 1W/200 and 1W/201 show the same stationing and offset in the installation schedule implying it could be the same foundation as shown in the OCS layout plan drawings. Please confirm that only one OCS Down guy Foundation is required between OCS foundation 1W/200 and 1W/201.	Yes, only one down guy foundation is required between OCS foundation 1W/200 and 1W/201.

IFB 7-1904 - OC Streetcar Construction Project
Questions Received

Submitted No.	Reference Document(s)				Questions	Response
	Exhibit / Attachment / Spec Section	**Drawing/ Attachment**	**Page Number(s)**	**Paragraph (s)**		
73	Schedule of Quanitities & Prices				Schedule of Quantity and Prices has Bid Item 48 Traction Power Substation with a quantity of 4ea. There are four full size TP substations through out the alignment with a smaller substation inside the Maintenance Building. Should the smaller traction power substation inside the maintenance facility get paid under Bid Item 48, increasing the quantity to 5 ea? If the smaller traction power substation inside the maintenance facility is not to be paid under Bid Item 48, which bid item should it be paid under?	Traction power equipment contained within the Maintenance and Storage Facility would be paid for under Bid Item 16 as described in SC 53.4 Item 16.
74		DN47, DN49, DN50			For the Santa Ana River Bridge, please provide details for intermediate diaphrams at spans 2 and 3.	Drawings with details for intermediate diaphragms at Spans 2 and 3 will be added by future addendum.
75	Book 1A, SC 6.6.1	CU07			Page 36 of the Special Conditions 6.6.1 shows a 2" water service and meter at N Fairview St, station 49+37, 47' RT. Sheet CU07 denotes this as a 1" service. Please confirm that this a 2" service as stated in the special conditions.	This is a 1" service. The table on Page 36 of SC 6.6.1 has been corrected in Addendum No. 5.
76	34 11 13 2.02.B	TD18, TD19, & TA Track Plans			We have identified the following conflicts between the TA Track Plans, the Referenced Spec, and the Precurved Rail Details on TD18 & TD19: The curves identified on TD18 & TD19 as curves EB134, EB135, EB145, EB147, EB148, WB139, WB146, & EB155 are identified on the Track Plans as curves EB133, EB134, EB144, EB146, EB147, WB138, WB145, & EB154. The curve EB147 on TD & EB146 on TA is shown as R=265' on TD and R=400' on TA. The curve EB148 on TD & EB147 on TA is shown as R=82' on TD and R=66' on TA. Please update the track plans and precurved rail details with the same Curve IDs and Radii. The curve WB133 on both TD & TA is shown as precurved with a R=355' while the Referenced Spec calls for precurved rail for R of 300' or less. Please confirm that this curve must be pre-curved rail. If the curve EB147 on TD & EB146 on TA is actually R=400', is it still required to be precurved?	--The curve numbers shown on the TA sheets are correct. TD 18 and 19 will be updated accordingly in an upcoming Addendum. --The minimum curve radii for precurved rail shall be 300' for 115RE and 400' for 112TRAM. The spec will be updated accordingly in an upcoming Addendum. --EB146 with R400' shall be precurved as it is within the 112TRAM limits.
77		TD20			Plan TD20 is titled "MSF Precurved Rail", but does not show the limits of the precurved rails. Within the MSF Yard, how far past the PC's and PT's will the Precurved Rails be required to extend?	The precurved rail shall be curved throughout the entire length of the curve per Note 5 on TD20.

IFB 7-1904 - OC Streetcar Construction Project
Questions Received

Submitted No.	Reference Document(s)				Questions	Response
	Exhibit / Attachment / Spec Section	Drawing/ Attachment	Page Number(s)	Paragraph (s)		
78	34 11 23 2.15.A	TG13			Plan TG13 is the Special Trackwork Schedule. In the schedule 10 ballasted concrete tie turnouts are designated as Shop Encapsulated. All but one of these turnouts are embedded in A.C. Paving. The 190' R turnout is not embedded at all. The encapsulation spec 34 11 23 2.15 is identified in 34 11 23 2.15A as for special trackwork embedded in concrete. It is unusual to encapsulate ballasted special trackwork. Please provide specifications and details for encapsulated ballasted special trackwork including fastening details for encapsulated or booted rail to concrete ties, and how the switch points are to be isolated. Also, is the 190' R turnout actually encapsulated?	Encapsulation for AC paved special trackwork is required to provide stray current corrosion control. Specification 34 11 28 has been updated in Addendum No. 6 to provide encapsulation specs for AC paved special trackwork. Fastening for AC paved special trackwork shall be per TD26. The ballasted 190'R TO will not be encapsulated per revision to TG13 that was issued with Addendum No. 5.
79	Book 1A, SC 6.6.1	CU27 BN11			Sheet CU27 depicts a new electrical service equipment enclosure at the south east intersection of E Santa Ana Blvd and French St (note 8). This electrical service can not be found in the table of SCE New Streetcar Electric Service Meters included in Special Conditions Section 6.6.1. Sheet BN11 shows an existing SCE Service Feed Point with an existing Metered Service Equipment Enclosure at this general location (Note 5). Sheet BN11 also shows this circuit coming from a new 120/240 V dual metered service panel at the North West intersection of French St and E Santa Ana Blvd, which is identified in the table in SC 6.6.1 (E Santa Ana Blvd 98+31, 28' LT). We are assuming that an electrical service, meter and enclosure will not be required at this location since it is not shown on the table and is depicted as existing in the street lighting plans. Please confirm.	There is no callout on either CU27 or BN11 for electrical service on the southeast quadrant of the intersection – it is on the southwest quadrant and on both CU27 and BN11 the callout is an existing service pedestal, not proposed. The existing pedestal at the southwest quadrant is to be removed and a new pedestal will be installed on the northwest quadrant as shown on BN 11 and on CU27 as item 14.
80	34 11 93 3.H	TD01 & CX Typ Sect			Regarding Geotextile Fabric under Ballasted Track: Drawing TD01 states "See Specifications for Location and Placement" and in Note 1 states "See typical sections on CX drawings...". In Referenced Spec it states "...fabric shall be installed as indicated on the Contract Drawings...". On the CX drawings the Fabric is not shown or referenced. Please show or specify locations for Geotextile Fabric in Ballasted Track Areas. Also, when used, is geotextile to extend under the maintenance access road in all areas?	Geotextile fabric shall be installed between the subgrade and subballast for all ballasted mainline and yard tracks for the entire subballast width. At locations where there is a maintenance road, the geotextile shall extend under the road as shown in TD01. TD01 will be updated in a future Addendum to remove the reference to the specifications for location and placement.

IFB 7-1904 - OC Streetcar Construction Project
Questions Received

Submitted No.	Reference Document(s)				Questions	Response
	Exhibit / Attachment / Spec Section	**Drawing/ Attachment**	**Page Number(s)**	**Paragraph (s)**		
81	34 11 93 3.I.5 & 32 12 18				Spec 34 11 93 3.I.5 states "Place paving fabric on top of ballast...". Spec 32 12 18 "Asphalt Paving" does not mention paving fabric. Please provide a spec for the required Paving Fabric; note that this is a different application than that of the specified Separation/Stabilization Geotextile.	Paving fabric shall be per Caltrans Standard Specification Section 96-1.02J, Paving Fabric. Contract Specification 34 11 93 have been updated accordingly in Addendum No. 6.
82	Book 1A, SC 6.6.1	CU26 BN11			The table of SCE New Streetcar Electrical Services in Special Conditions 6.6.1 calls out for a new SCE service pedestal with one meter for pedestrian lights at E Santa Ana Blvd station 97+00, 23' LT. Sheet CU26 shows a pullbox at this location and does not depict a an electrical service equipment enclosure. Sheet BN11 shows this circuit coming from a new 120/240 V dual metered service panel at the North West intersection of French St and E Santa Ana Blvd, which is identified in the table in SC 6.6.1 (E Santa Ana Blvd 98+31, 28' LT). Please confirm that there will not be a SCE service at this location.	There is a new pull box at 97+00, 23' LT along with new conduits and new street lights on north side of E. Santa Ana as shown on BN 11. There is no new SCE service pedestal as these street lights are tying into an existing circuit on the south side of the street (at southeast curb return).
83	Book 1A, SC 6.6.1				The table of SCE New Streetcar Electrical Services in Special Conditions 6.6.1 calls out for two new SCE service pedestals at the W 5th St station (21+80, 22' RT and 21+89, 22' RT). These service pedestals can not be found on the composite utility plans. It appears they could be duplicated with the services shown on Sheet CU24, which are identified in the table in SC 6.6.1 (74+70 31' RT, 74+61 31' RT). Please confirm that they are not required or update the composite utility plans to show them.	The two locations (21+80 and 22+89, not 21+89) are along W 5th St in front of the MSF, not at 74+70 and 74+61. Two new street lights (and poles) will be located here, and will be shown in an upcoming Addendum. Two new service pedestals will be shown in the upcoming drawing revision.
84		ZPN21, ZPS11, ZPS13, ZPS14, ZPD15			The signage depicted on ZPD15 as west facade signage we believe should be north facade signage. On this detail, the OC Streetcar logo is shown to be laser cut in a 1/4" piece of aluminum, and the surrounding area is denoted as "horiz. pattern 3" insulated metal panels", including the area beyond (west of)gridline 1. However, per the 2nd floor plan on ZPN21, there is no occupied area west of Gridline 1. Do the metal panels extend beyond Gridline 1, and if so, is the only aluminum the 1'-11-1/2" x 11'=11-1/2" panel? Or are all the panels beyond Gridline 1 aluminum, and if so, do the aluminum panels extend to Gridline 2, covering the underlying insulated metal panels?	1. Detail 2/Z-PD15 will be revised to North Façade Signage in an upcoming Addendum. 2. Metal panels will extend beyond Gridline 1 at roof level, see sheet Z-PN-31 Roof Plan Segment 1 and Sheet Z-PS11 MF North Elevation. 3. Aluminum panel to be 1'-11-1/2"" x 11'-11-1/2"", see details 2/Z-PD15, 1/Z-pd22.

IFB 7-1904 - OC Streetcar Construction Project
Questions Received

Submitted No.	Reference Document(s)				Questions	Response
	Exhibit / Attachment / Spec Section	**Drawing/ Attachment**	**Page Number(s)**	**Paragraph (s)**		
85		ZPD15			The west facade signage on ZPD15 appears to be specified in 10 14 02, section 2.03C, with the exception that the material is shown to be 1/4" thick. The west facade signage screen on ZPD15 does not appear to be specified in 10 14 02. Please confirm the specification sections for the signage shown on ZPD15.	1. Detail 1 – large OCTA logo says to be “silk screened” --- however the Painting spec 09 91 00 does not contain any language for silk screening. 10 14 02 Signage, 2.02.A.3 does state that Copy Application signs may be by silk screen 2. Detail 2 – west façade signage is covered by specification 05 60 02, Misc. Metal Fabrications. Digital artwork to be provided by OCTA for the OCTA and OC Streetcar logos.
86	Exhibit M	ZDG01			For the MSF, there are no earthwork specifications other than 31 11 02, Site Clearing. Plan sheet ZDG01 states that, "report of geotechnical investigation and addenda are part of the contract documents". Exhibit M-3, the geotechnical report for the MSF includes many recommendations not conveyed on the plans, including: - over-ex and replacement with structural backfill 2' below, and 3' beyond footings - special ASTM E1745 vapor barrier under slabs on grade - no sand above vapor barriers - wet curing requirements for slabs on grade and flatwork - restrictions on trench excavations - etc. Please provide specifications and updated plans that reflect the earthwork requirements at the MSF.	New Technical Specification Section 31 20 00, Earthwork (MSF), will be issued in a future addendum. Please refer to drawing Z-DD11.

IFB 7-1904 - OC Streetcar Construction Project
Questions Received

Submitted No.	Reference Document(s)				Questions	Response
	Exhibit / Attachment / Spec Section	**Drawing/ Attachment**	**Page Number(s)**	**Paragraph (s)**		
87	Book 1A, SC 6.6.1				Page 37 of the Special Conditions 6.6.1 shows a new 6" Domestic water service and meter for the Maintenance Storage Facility. Sheet Z-CN07 denotes this as a 3" service. Please confirm that this a 3" service and meter.	Sheet Z-CN07 is correct, Domestic Water is a 3" service. SC 6.6.1 had been revised in Addendum No. 6 from 6" to 3", and has deleted the meter for the 8" fire line.
88	34 11 93 2.02 & 34 11 16 3.08.B				Do the rail length requirements of 34 11 16 3.08.B apply to the Insulated Joint Plugs as described in 34 11 93 2.02? As with the 115# Rail, are Tram Rail Insulated Joints required to be plugs?	Insulated Joints for 115RE Section shall be prefabricated bonded insulated joint sections as shown in Contract Drawing TD15 and as detailed in Section 34 11 93 2.02. Length of prefabricated section (“plug”) shall conform to the requirements of Specification Section 34 11 16 3.08B. Tram Rail IJ’s shall be prefabricated bonded insulated joint “plugs” per Contract Drawing TD28, length as shown.
89	34 11 93 2.01 & 34 72 00 3.15.C				The referenced specs give requirements for superelevation tags on ties. Are superelevation tags required on any type of track other than Ballasted Track?	Superelevation tags are required for ballasted track only.
90	34 72 00 3.10 - 3.14				Please confirm that the referenced specs are requirements for Ballasted and DF Tracks and not for Embedded Track.	Confirmed that 34 72 00 3.10-3.14 applies to Ballasted and DF Track. See 34 11 30 for the requirements for Embedded Track.
91	Prequalification Documents				Does the prequalification of the CIDH pertain to the bridge foundation pile only? (36 inch, 48 inch and 108 inch CIDH)	Yes, the CIDH prequalification was for bridge foundations only.

Submitted No.	Reference Document(s)				Questions	Response
	Exhibit / Attachment / Spec Section	Drawing/ Attachment	Page Number(s)	Paragraph (s)		
92	Prequalification Documents				Please provide a list of all prequalified and potentially prequalified prime contractors and subcontractors.	The AUTHORITY will only release the names of prequalified prime contractors. The most release list was issued as part of Addendum No. 5 and will be updated as necessary
93					Is track-to-earth resistance testing required for the ballasted and direct fixation rail sections? Section 34 72 00 “Trackwork”, Paragraph 3.19E provides a criteria for track-to-earth resistance tests on the embedded (1,000 ohms per 1,000’ rail) track and special (100 ohms per 1,000’ rail) trackwork, but there is no mention nor criteria for testing the direct fixation and ballasted track.	Spec 26 05 11 governs the track-to-earth acceptance ratio for track types. Spec 34 72 00, issued with Addendum No. 6, was revised to reference 26 05 11.
94					Drawing Z-DD11 (Sheet 792 of 1520) “Structure MSF Typical Concrete Details,” Detail 1 shows a vapor barrier on the expansion joint detail. The detail states “Typical – Provide fine graded aggregate, Vapor Retarder and Gravel/Crushed rock as required by Geotechnical Engineer” Please provide the details of what the Geotechnical Engineer is going to require so we can have a defined section to bid. (What section depth and type of materials will make up the “Fine graded aggregate, Vapor Retarder and gravel/crushed rock”)?	Vapor barrier shall be installed per specification section 03 30 02 Cast-in-Place Concrete, specifically parts 2.02, I, 2. and 3.02, G. Vapor Barrier.
95					Drawing Z-DD11 (Sheet 792 of 1520) “Structure MSF Typical Concrete Details,” Detail 1 note 4 states, “Locations of Vapor retarder per architectural drawings.” We are not able to locate the vapor retarder locations in the architectural drawings. Please provide the locations for the vapor retarder. Please confirm vapor retarder is defined as the system of aggregate, vapor retarder and gravel/crushed rock.	Vapor barrier shall be installed per specification section 03 30 02 Cast-in-Place Concrete, specifically parts 2.02, I, 2. and 3.02, G. Vapor Barrier. Vapor barrier shall be placed under all poured-in-place concrete slabs at grade. Waterproofing as specified elsewhere shall be used in lieu of vapor barrier at the sides and bottoms of all pits below the bottom of associated slabs on grade.
96		ZGD80-82, ZGN80-81			The referenced Fire Protection Plans do not include the car wash. Please confirm that neither the car wash bay, nor the car wash equipment building require an automatic fire sprinkler system.	Confirmed
97		ZGN80			While both rooms 124 and 125 have separate preaction sprinkler systems (in addition to room 148), the arrow for FM-200 protection appears to only apply to room 124. Please confirm that only room 124 has FM-200 protection.	Yes. That is correct. Both rooms have separate preaction sprinkler systems. Room 124 only will have additional FM-200 protection.

IFB 7-1904 - OC Streetcar Construction Project
Questions Received

Submitted No.	Reference Document(s)				Questions	Response
	Exhibit / Attachment / Spec Section	**Drawing/ Attachment**	**Page Number(s)**	**Paragraph (s)**		
98	Specification 34 12 00	ZHG02			Drawing Z-HG02 Equipment Schedule, calls for Spantec Systems Inc. as the manufacture/vendor for equipment no. LI-05 Monorail. Specification 34 12 00 for the Monorail lists Craneveryo Corp. and Washington Crane and Hoist Company Inc. as the only approved manufactures for the monorail. Please confirm if Spantec Systems Inc. is an approved manufacture for the monorail.	Yes, Spantec is an approved manufacturer/vendor. Revised spec will be provided in a future Addendum.
99	Specification 41 22 13	ZHG02			Drawing Z-HG02 Equipment Schedule, calls for Spantec Systems Inc. as the manufacture/vendor for equipment no. LI-09 2 Ton Underhung Bridge Crane and LI- 19 7.5 Ton Bridge Crane. Specification 41 22 13 for the 2 Ton Underhung Bridge Crane and 7.5 Ton Bridge Crane lists Craneveyor Corp., Washington Crane and Hoist Company Inc., and Allied Crane Inc. as the only approved manufactures. Please confirm if Spantec Systems Inc. is an approved manufacture for the 2 Ton Underhung Bridge Crane and 7.5 Ton Bridge Crane.	Yes, Spantec is an approved manufacturer/vendor. Revised spec will be provided in a future Addendum.
100	Specification 41 33 00	ZHG02			Drawing Z-HG02 Equipment Schedule, calls for Cincinnati Electrical Tool as the manufacture/vendor for equipment no. MA-05 Grinder/Dust Collector. Specification 41 33 00 for the Grinder/Dust Collector lists Hammond Machinery Inc. as the only approved manufacture. Please confirm if Cincinnati Electrical Tool is an approved manufacture for the Grinder/Dust Collector.	Yes, Cincinnati is an approved manufacturer/vendor. Revised spec will be provided in a future Addendum.
101		ND01, Sheet 694			Sheet 694, Retaining Wall Detail Drawing, Note #1 at the top of the page states "For Sound Wall and Retaining Wall Architectural Finish or Texture See Details Elsewhere in Project Plans." We have been unable to find where any Architectural treatments or textures are being called out in the Plans or Specifications, aside from Anti Graffiti coatings. Please confirm if there are any architectural requirements, coatings or anti-graffiti coatings and provide the details if required.	No architectural treatments or textures are required. Note #1 on ND01 has been revised accordingly in Addendum No. 6.

IFB 7-1904 - OC Streetcar Construction Project
Questions Received

Submitted No.	Reference Document(s)				Questions	Response
	Exhibit / Attachment / Spec Section	**Drawing/ Attachment**	**Page Number(s)**	**Paragraph (s)**		
102	34 11 33, & 34 72 00	TD12, TD13, &TD24			The referenced trackwork specifications do not provide the required spacing for Ties. The referenced drawings show spacings for specific conditions. Is the typical spacing for Ties to be 30"? Is this spacing to be reduced in curves? If so, to what and at what Radius?	Concrete tie spacing is provided in Spec 34 11 33, Section 1.01.C.2.a thru d. Note the following revisions to the referenced spec have been made in Addendum No. 6: c. Grade Crossing Track: 20 inches d. Special Trackwork: As shown on Contract Plans
103	34 11 93	TD29			Note 3 on the referenced drawing states "Restraining Rail...with 115 RE Rail...shall extend 10' beyond the limits of the curve...". In some cases, within the MSF yard, extending the Restraining rail will put the restraining rail in the shop and in the car wash. Please confirm that restraining rail should terminate before the shop & car wash.	The restraining rail shall extend into the shop and car wash building to provide the 10’ extension beyond the curve limits.
104		U-TSN08, U TSN16, U DBN32 and U-DBD10			Drawing U-TSN08 and U-TSN16 both show a train signal cabinet just before the alignment goes through Sasscer Park. Drawing U-DBN32 is a ductbank drawing of the same area but the train signal cabinet does not appear in drawing U-DBN32. Drawing U-DBD10 shows a cable schedule which includes every signal cabinet shown in the ductbank drawings. The only signal cabinet not listed in U-DBD10 is the signal cabinet from drawings U-TSN08 and U-TSN16. Should the signal cabinet shown in drawings U-TSN08 and U-TSN16 also be shown in U-DBN32 and be connected to the actual ductbank system? If so, please provide details on how the train signal cabinet on U-TSN16 connects to the ductbank system.	The train cabinet in this location only serves the bikeway crossing signal at the park, and is only connected to the nearby traffic signal cabinet at Parton/Santa Ana. The routing of signal cables does not need to pass through the systemwide ductbank.
105		Z-TN01, Z DD15, & TD02			Are the concrete embedded tracks shown on Z-TN01 within the MSF Yard and outside of the shop and carwash, to be constructed per section 2 of Z-DD15, or per section A of TD02?	See response to Bidder Question #42.
106		U-TSN08, XN07			Train signal drawing U-TSN08 note 1 states that the operation of the warning device (flasher) is provided by the traffic system and that the interface with traffic controller is via dry contact. Traffic signal plan XN07 is for the same area as U-TSN08 but doesn't show a conduit from the traffic controller to the warning device (flasher). Is the warning device (flasher) controlled by the traffic cabinet? If so, please provide details on connection to the ductbank system, details for modifications to the traffic controller and equipment to be housed in the train signal cabinet.	The flasher is operated by the Railroad Signal Controller. The flasher is connected to railroad signal cabinet. The intersection traffic signal cabinet is interconnected with the railroad signal cabinet to allow for coordination and communication. Cable and conduit types and sizes are shown on U-TSN16.

IFB 7-1904 - OC Streetcar Construction Project
Questions Received

Submitted No.	Reference Document(s)				Questions	Response
	Exhibit / Attachment / Spec Section	**Drawing/ Attachment**	**Page Number(s)**	**Paragraph (s)**		
107		Special Trackwork Drawings, Train Signal Drawings			The special trackwork drawings show a manual switch mechanism with note 2 that states the switches will be manual with accommodation for point detection. The train signal drawings do not show any conduit runs from any train signal cabinet to any of the turnouts with manual switch mechanisms. Please provide drawings that show a conduit running from a train signal cabinet to the manual switch mechanisms.	All facing point switches on mainline will have point detection. Revised drawings to be issued in a future addendum.
108		Volume 4 Z-CN04			Please provide existing elevations at the MSF so bidders can calculate cut and fill quantities for the MSF site.	Z-CN04 will be updated to show existing spot elevations and contours and issued in a future Addendum.
109		Volume-2 C1002			Please provide the profiles for Laterals "A" and "B" that are missing on drawing no. C1002.	Drawings C1001 to C1008 are under revision and will be issued in a subsequent addendum.
110		Volume-2 C1004			Please provide the profile for Lateral "D" that is missing on drawing no. C1005.	Drawings C1001 to C1008 are under revision and will be issued in a subsequent addendum.
111		Volume-2 C1005			Please provide the profile for Lateral "C" that is missing on drawing no. C1004.	Drawings C1001 to C1008 are under revision and will be issued in a subsequent addendum.
112		Volume-2 C1006			Please provide the profile for Lateral "E" that is missing on drawing no. C1006.	Drawings C1001 to C1008 are under revision and will be issued in a subsequent addendum.
113		Volume-2 SN13, SD01			The new manhole to be installed at centerline station 25+53.42, 0' RT, on Drawing SN13, depicts that approximately 6 LF of 24" VCP on the north and south side of the manhole needs to be replaced. However there are no call outs to replace the 24" VCP pipe on SN13 or SD01. Does approximately 6 LF of 24" VCP on either sided at this manhole need to be removed and replaced?	To be answered in a future Addendum.
114		Volume-2 WN01-WN12			Water construction notes 150, 159, 160, & 165 are the only notes that call to install a casing around the new waterline. These construction notes refer to details 2 and 7 on WN11 which both call for casings around the new waterlines. Please confirm that casings are only required per Detail 2/WN11 for the locations that have call outs 159, 160 and 165.	Locations with construction notes 150,159,160, or 165 will be the only locations requiring a casing. Casing requirements and locations will be clarified in a future addendum . Small services (1”/2”) will require a 10-mil polyethylene sleeve per Detail 1/WN11.

IFB 7-1904 - OC Streetcar Construction Project
Questions Received

Submitted No.	Reference Document(s)				Questions	Response
	Exhibit / Attachment / Spec Section	**Drawing/ Attachment**	**Page Number(s)**	**Paragraph (s)**		
115		Volume-2 WN09			The waterline detail for the intersection of Santiago Street and E. Santa Ana Blvd shows to begin construction of an 8" domestic water main at station 230+04 Santiago Street. Construction notes 128 and 138 say to install 12" DI Tee and Gate Valve. Also, all of the existing waterline in the vicinity is 12" CI pipe. Please confirm that this waterline is not 8" but is 12" pipe.	The waterline should be a 12” pipeline, not an 8”. This will be updated in a future addenda.
116		Volume-2 WN01-WN12, RN01-RN29			There is approximately 1,600 lf of 12" waterline to be installed in areas that will require permanent AC/Concrete restoration. This waterline is outside the current demolition limits provided in the removal plans on drawings RN01-RN29. Is this 1,600 lf of 12" waterline intended to be outside the demolition limits or will the removal drawings be revised to include the 1,600 lf of waterline in the AC/Concrete demolition limits?	A utility trench detail (City of Santa Ana Std Plan 1150 is applicable for the installation of the 12" water main for any segments outside the pavement rehab limits. The cost of trenching and resurfacing is included in the lump sum cost for Water Supply System.
117	General Conditions Article 11			Article 11 Insurance, Item Number (7)	Will the agency consider a complete waiver of consequential damages and actual damages, which are unnecessary due to liquidated damages being assessed. Additionally, can the stated liquidated damages be the sole and exclusive remedy for delay and be capped at an aggregate dollar amount or percentage of the contract?	The AUTHORITY will not waive actual or consequential damages. The AUTHORITY will not place a limit on liquidated damages or limit them to an aggregate dollar or percentage amount.
118	General Conditions Article 39			Article 39 Warranty, Section (C)	Will the agency consider a limitation of liability granted as a percentage of the contract value?	No change to the requirement.
119	General Conditions Exhibit A Section 47.2 Quality Control Manager, QC Personnel and Laboratories			47.2 Quality Control Manager, QC Personnel and Laboratories Paragraph 1) and 2).	Section 47.2 states that the Construction Quality Control Manager (CQCM) shall be employed by the contactor. Will the Contractor be allowed to use a third party consulting firm as the CQCM? The ability to subcontract this work can assist in fulfilling the DBE requirements of the project.	Section 47.2 was revised in Addendum No. 6 to clarify that the contractor may use a subcontractor for the role of CQCM.
120	Section IV Agreement Article 16 Disputes			Article 16 Disputes, Section A.	Article 16 states "if project managers do not reach a resolution, the dispute will be decided by AUTHORITY’s Director of Contracts Administration and Materials Management (CAMM), who shall reduce the decision to writing, and mail or otherwise furnish a copy thereof to CONTRACTOR. The decision of the Director, CAMM, shall be the final and conclusive administrative decision.". Will the authority add a neutral Dispute Resolution Board (DRB) as a final step in the dispute cycle?	No change to the requirement.

IFB 7-1904 - OC Streetcar Construction Project
Questions Received

Submitted No.	Reference Document(s)				Questions	Response
	Exhibit / Attachment / Spec Section	**Drawing/ Attachment**	**Page Number(s)**	**Paragraph (s)**		
121	Section IV Agreement Article 31 Ownership of Reports and Documents			Article 31 Ownership of Reports and Documents, Section B	Article 31 states "CONTRACTOR shall not use AUTHORITY's name, photographs of the project, or any other publicity pertaining to the project in any professional publication, magazine, trade paper, newspaper, seminar or other medium without the express written consent of AUTHORITY.". Can the Contractor use the authority's name for the purposes of solicitation as it relates to this project potential subcontractors and the construction community without express written consent?	Article 31 is effective with Agreement execution.
122	Section IV Agreement Article 42 Inspection and Acceptance			Article 42 Inspection and Acceptance, Section C	Article 42 states "CONTRACTOR shall furnish promptly, without additional charge, all facilities, labor, equipment and material reasonably needed for performing such safe and convenient inspection and test as may be required by AUTHORITY.". Please define reasonably. Also identify the types of tests that will be required by the Authority.	To be answered in a future Addendum.
123	Section IV Agreement Article 61 Contractor Purchased Equipment			Article 61 Contractor purchased equipment	Clarify the definition of the word equipment.	To be answered in a future Addendum.
124	General Conditions Exhibit A Section 25 Notices and Communications			25.3 Request for Information (RFI)	Section 25.3 states "Responses to Requests for Information shall be issued within seven (7) calendar days of receipt of the request from CONTRACTOR unless AUTHORITY determines that a longer period of time is necessary to provide an adequate response.". Please specify a definitive amount of time that the Authority has to provide a response to RFIs.	A typical response time will be 7 calendar days. We cannot provide a definitive response time because it has to be evaluated on a case-by-case basis.
125	General Conditions Exhibit A Section 37 Safety Provisions			37.9	Section 37.9 states " The CONTRACTOR shall give notice in writing, at least forty-eight (48) hours before breaking ground, to all persons having interests on or near the Site, ..". Please define the term "all persons having interests on or near the Site" as it is not reasonable to notify all persons without a physical address, or utility stakeholder near the site.	A revision to Section 37.9 was issued with Addendum No. 6 changing it to say: "The CONTRACTOR to give notice in writing, at least14 days before breaking ground in any subsegment, to the ENGINEER."

IFB 7-1904 - OC Streetcar Construction Project
Questions Received

Submitted No.	Reference Document(s)				Questions	Response
	Exhibit / Attachment / Spec Section	**Drawing/ Attachment**	**Page Number(s)**	**Paragraph (s)**		
126	General Conditions Exhibit A Section 37 Safety Provisions			37.15	Section 37.15 states "A rigging plan is required for all lifts". Please clarify the Authority's definition of "rigging plan" and also "all lifts". Will this specification only apply to pre-cast girders for the Santa Ana River bridge?	A rigging plan is a formal planning process that will identify all hazardous conditions (risks) that may be encountered during a lift while using a crane or other hoisting equipment devices. A rigging plan should be developed prior to a load being lifted/hoisted to confirm compliance with all applicable regulatory standards and to ensure the responsible individuals have successfully implemented appropriate engineering and administrative mitigations. For additional information please refer to; •California Code of Regulations (CCR) Title 8 Standards, Subchapter 4. Construction Safety Orders, Article 15. Cranes and Derricks in Construction, and Subchapter 7. General Industry Safety Orders, Group 13. Cranes and Other Hoisting Equipment •Federal OSHA, 29 CFR 1926.550 •American Society of Mechanical Engineers (ASME) •ANSI Standards All lifts require pre-lift planning to determine hazard analysis factors, to include, but not limited to load; load weight, equipment configuration, equipment rated capacity, clearance, and site specific conditions. Such special planning requirements should be validated with appropriate calculations and applicable
127	General Conditions Exhibit A Section 65 Change Requests and Change Directives			65.1 Change Requests	Section 65.1 states "If AUTHORITY has not received sufficient substantiating documentation or information within a reasonable time after receipt of the Change Request, such insufficiency may be grounds to deny the Change Request.". Please define reasonable time after acceptance as it relates to the grounds to return a rejected request as it is open to interpretation.	Reasonable time will be agreed to between the AUTHORITY and the CONTRACTOR based on the request.

IFB 7-1904 - OC Streetcar Construction Project
Questions Received

Submitted No.	Reference Document(s)				Questions	Response
	Exhibit / Attachment / Spec Section	**Drawing/ Attachment**	**Page Number(s)**	**Paragraph (s)**		
128	Special Conditions Exhibit A-1 SC-6 Work Description, Segments, Sequence & Constraints			6.3.2 Pre-Construction Tasks	Section 6.3.2 states "Place orders for any long lead items necessary to complete the project within the established project schedule". Define the term long lead item.	Per Special Condition 6.3.2, long lead items are any items nessessary to complete the project within the established project schedule. Per Special Condition 10.1, CONTRACTOR shall develop Construction Submittal and Deliverable Requirement List (CSDRL) with planned submittal dates
129	Special Conditions Exhibit A-1 SC-4 Time for Performance			4.2.2 Notice to Proceed with Construction	4.2.2 bullet number 11 states "Approved material submittals and proof of orders for long- lead materials". Please provide a list of the Authority's long lead materials required for this submittal.	Per Special Condition 23, Scheduling of Work under this Contract shall be performed by the CONTRACTOR, and shall include procurement of each major type of material or equipment. The CONTRACTOR's schedule shall determine long lead materials.
130	Special Conditions Exhibit A-1 SC-6 Work Description, Segments, Sequence & Constraints			6.3.1 General Work Requirements	Section 6.3.1 states that "The CONTRACTOR shall submit requested revisions of the proposed traffic control plans to the Engineer and City to allow for a minimum review duration of 30 days in advance of proposed traffic control implementation.". We respectfully request that the word minimum be removed from this statement. Please provide a maximum review period.	This specification requires the CONTRACTOR to submit proposed traffic control plans at least 30 days before the CONTRACTOR wishes implement the traffic control measure. This requirement will remain. The AUTHORITY is unable to guarantee approval within a pre-determined timeframe. If the CONTRACTOR submits a plan that isn't acceptable to the City, and doesn't make revisions requested by the City, then the approval will not be granted.
131	Special Conditions Exhibit A-1 SC-6 Work Description, Segments, Sequence & Constraints			6.3.2 Pre-Construction Tasks	Section 6.3.2 states "Submit shop drawings for the “Submittal of Shop Drawings, Product Data and Samples” of the General Conditions". We respectfully request that this bullet point be removed in its entirety as shop drawings will be submitted by suppliers and subcontractors throughout the life of the project. If there are shop drawings critical to the authority that must be submitted in the pre- construction period of 60 days please specify those items.	The bullet has been revised in Addendum No. 5 to say: Submit shop drawings for any long lead items per the "Submittal of Shop Drawings, Product Data and Samples" of the General Conditions.

IFB 7-1904 - OC Streetcar Construction Project
Questions Received

Submitted No.	Reference Document(s)				Questions	Response
	Exhibit / Attachment / Spec Section	**Drawing/ Attachment**	**Page Number(s)**	**Paragraph (s)**		
132	Special Conditions Exhibit A-1 SC-6 Work Description, Segments, Sequence & Constraints			6.6.1 Utility Service Connections	Section 6.6.1 states "utility service connections the Contractor shall include but not be limited… payment of all associated fees.". Please clarify if the Contractor is responsible for the electric fees associated with, and permits required, for the work or will the Authority cover all costs for power and permits.	See response to question No. 68.
133	Special Conditions Exhibit A-1 SC-12 Sound and Vibration Control Requirements			12.1 General Sound and Vibration Control Requirements	Section 12.1 states "The CONTRACTOR shall take all necessary means to eliminate or minimize vibration impacts to adjacent properties, businesses, and residences caused by its construction operations. Measures applied to limit noise levels will often limit vibration levels. The CONTRACTOR shall ensure that vibration generated by construction activities does not exceed a peak particle velocity (PPV) of 0.12 in/sec within 10 feet of any habitable building or structure or other sensitive receptor.". Please clarify the term "other sensitive receptor".	Other sensitive receptors in addition to habitable buildings are locations where people gather where noise and vibration could interfere with their use, such as schools, churches, courthouses, businesses, etc.
134	Special Conditions Exhibit A-1 SC-23 Progress Schedule			23.14 AUTHORITY Holidays	The Authority's listed holidays in section 23.14 AUTHORITY HOLIDAYS do not align with the region's trade agreements. Please consider incorporating the additional days for scheduling purposes Absent from the list are Veterans day, as well as the first Saturday following the first Friday in the months of June and December. Please define the authority in charge of declaring the holiday observance date.	Contractural durations are based on Calendar Days. We have deleted the following from the first line of Special Condition 23.14: "for establishing normal scheduled workdays and for use in the CPM schedule" in Addendum No. 5.
135	Special Conditions Exhibit A-1 SC-33 Quality Control and Quality Assurance			SC-33 Quality Control and Quality Assurance	Section states "Unless noted otherwise, the CONTRACTOR shall notify the Engineer a minimum of seven (7) calendar days prior to the performance of work that requires inspections by third parties such as the City, OCFCD, or utility company, or witnessing of testing by third parties such as City, or utility company". Will the engineer accept a 3 week look ahead as notification or does the engineer expect a specific notification for each item?	Specific notification will be required for each item.

IFB 7-1904 - OC Streetcar Construction Project
Questions Received

Submitted No.	Reference Document(s)				Questions	Response
	Exhibit / Attachment / Spec Section	**Drawing/ Attachment**	**Page Number(s)**	**Paragraph (s)**		
136	Special Conditions Exhibit A-1 SC-53 Price and Payment Procedures			53.4 Item Measurement and Payment Section B Parts: 48. Paragraph D 49. Paragraph D	Are these two paragraphs the complete spare parts list for the project? Please confirm that these two paragraphs are the complete spare parts list for the project and if not please provide a comprehensive spare parts list.	In addition to bid items 48 (TRACTION POWER SUBSTATION) and 49 (FURNISH AND INSTALL OCS), bid items 39 (25M TURNOUT AND 25M TURNOUT-SPECIAL), 41 (190'R SINGLE CROSSOVER), 52 (TRAIN CONROL AND SIGNAL SYSTEM), and throughout the Technical Specifications, lists the spare parts that should be included in the bid.
137	Special Conditions			Section 6.3	Section 6.3 states "If the CONTRACTOR deviates from the specified order of Work, or sequencing indicated by the Contract Documents, it does so at its own risk and shall assume any and all time impacts and cost associated with such deviations.". Has the agency or any of its consultants prepared a schedule that is compliant with all of the contract requirements, if so please provide this to the contractors.	To be answered in a future Addendum.
138	Special Conditions			Section 6.3	Section 6.3 states "If the CONTRACTOR deviates from the specified order of Work, or sequencing indicated by the Contract Documents, it does so at its own risk and shall assume any and all time impacts and cost associated with such deviations." Can the agency confirm that upon the submission and acceptance of a mutually agreed to Revised Schedule, the applicable portion of the General Conditions with respect to Time for Performance of Work and Contract Modification, Disputes and Claims will apply?	Yes, confirmed.
139	Addendum 3				Per Addendum 3 the contract bid date was extended from March 5, 2018 to April 27th, 2018 will the questions and clarifications deadline be extended to April 6th to coincide with the change of the bid date?	Addendum No. 4 to the IFB extends the due date for questions to February 28, 2018

IFB 7-1904 - OC Streetcar Construction Project
Questions Received

Submitted No.	Reference Document(s)				Questions	Response
	Exhibit / Attachment / Spec Section	**Drawing/ Attachment**	**Page Number(s)**	**Paragraph (s)**		
140	Special Conditions Exhibit A-1 GC-61 Progress Payments			61.2 Payment to Subcontractors	Can the agency specify a period for response by the contractor for any allegation of actions described under 61.2 Payment to the Subcontractors.	Question withdrawn by requester.
141	SECTION I. INSTRUCTIONS TO BIDDERS F. SUBMISSION OF BIDS and Addendum 3			3. Bid Booklet and Identification of Bids	Per Addendum 3 the bid submittal date is scheduled for April 27, 2018 at 11:00am. Will the Authority allow a 96 hour grace period from this submittal date for all bid information outside of the Bid Booklet?	To be answered in a future Addendum.
142	Special Conditions Exhibit A-1 SC-11 Mobilization			11.2 Payment	Will the agency consider removing the 5% cap on the mobilization fee as the costs associated with mobilization are likely to exceed 5% of the contract value? Will the agency consider paying 50% of the mobilization fee at LNTP and the remaining 50% of the mobilization at NTPC as the costs of mobilization are incurred ahead of performing the work that counts towards the amount earned?	The cap on total mobilization and payment schedule will remain unchanged. Please note SC-38 and the willingness of the AUTHORITY to compensate for materials not yet incorporated into the Work.
143					MSF Volume II, Spec. 14 71 11, Material Lift, Part 2.01 calls for the material lift to be a Series B VRC manufactured by Pflow Industries. Part 2.02 calls for the VRC to have a minimum rating of 1,300 lb and have a minimum 48” by 72” platform. The Pflow Series B VRC has a max. capacity of 500 lbs and a platform size of 36” x 36”. Please clarify.	Specification 14 71 11 will be revised in a future Addendum to specifiy a Series "M" VRC.
144					MSF Volume II, Spec. 14 71 11, Material Lift, Part 2.02, C calls for the Mechanical Lift to have a max. lift height of 12’-6” with a total of 3 levels with a distance between floors of 12’-6”. Three levels with 12’-6” between levels requires a max lift height of 25’. Please clarify.	Specification 14 71 11 will be revised in a future Addendum to specifiy a max height of 25'.
145					Please confirm that we are not required to provide any furniture (desks, chairs, file cabinets, white boards, etc.) for the Maintenance Facility.	Correct, the CONTRACTOR is not required to provide furniture (desks, chairs, file cabinets, white boards, etc.) for the Maintenance Facility.

IFB 7-1904 - OC Streetcar Construction Project
Questions Received

Submitted No.	Reference Document(s)				Questions	Response
	Exhibit / Attachment / Spec Section	Drawing/ Attachment	Page Number(s)	Paragraph (s)		
146					Sheet No. 873 (MF North Elevation PS11) calls out Green Screen panel mounted over split face wall. Please provide the specifications for the Green Screen.	Green Screen specifications will be provided via future addendum, however, the basis for design is: greenscreen® 1743 S. La Cienega Blvd. Los Angeles, CA 90035-4650 310.837.0526 800.450.3494 sales@greenscreen.com
147					The below listed specification sections appear in the Technical Specification for the MSF, Volume II, but are not clearly identified where the items of work are to be performed within the MSF. Please clarify. Section 12 21 00 “Window Blinds” indicates blinds will be required on the project. We are not able to locate the blinds on the plans. Please provide the locations where blinds are required. Section 07 13 00 “Sheet Waterproofing” indicates waterproofing is required at the MSF. Please indicate where the sheet waterproofing is required on the MSF drawings. Section 07 14 16 “Cold Fluid-Applied Waterproofing” indicates waterproofing is required at the MSF. Please indicate where the cold fluid-applied waterproofing is required on the MSF drawings. Section 07 16 13 “Polymer Modified Cement Waterproofing” indicates waterproofing is required at the MSF. Please indicate where the polymer modified cement waterproofing is required on the MSF drawings. Section 10 22 13 “Wire Mesh Partitions” indicates Wire Mesh Partitions are required at the MSF. Please indicate where the Wire Mesh Partitions is required on the MSF drawings. Section 10 26 00 “Wall and Door Protection” indicates Wall and Door Protection is required at the MSF. Please indicate where the Wall and Door Protection is required on the MSF drawings. Section 10 51 13 “Metal Lockers” indicates Metal Lockers are required at the MSF. Please indicate where the Metal Lockers are required on the MSF drawings. Section 10 56 13 “Metal Storage Shelving” indicates Metal Storage Shelving is required at the MSF. Please indicate where the Metal Storage Shelving is required on the MSF drawings.	Window blinds are required for all occupiable space including corridors except for the shops, storage rooms, and lobby Sheet waterproofing or cold fluid-applied waterproofing shall be employed underneath and at all sides of pits below the finished first floor, to the bottom of first floor slab. It shall be at the Contractor's discretion to employ the system or combination of systems that ensure a waterproof enclosure. Sheet waterproofing or cold fluid-applied waterproofing shall be employed underneath and at all sides of pits below the finished first floor, to the bottom of first floor slab. It shall be at the Contractor's discretion to employ the system or combination of systems that ensure a waterproof enclosure. Polymer Modified Cement Waterproofing is to be employed on the interior surfaces of all pits designed to contain or potentially contain water and other spill related fluids (i.e. sumps, train washer capture area/slab, reclamation pits). This is to be applied in addition to waterproofing on the exterior of the structures and will be shown in a future Addendum. See Z-PN22 and Z-PN24 and notes thereon that reference "5'-0" high wire mesh fence". Refernce also detail F/Z-PD02 Door protection is provided in the specification section 08 70 00, Part 3.06 Schedule. Wall protection sections of 10 26 00 are not a part of the work. In all '"Locker Rooms;" there are three such rooms shown on Z-PN10. Metal shelving is located in the parts rooms--see Z-PN10 and Z-PN20.

IFB 7-1904 - OC Streetcar Construction Project
Questions Received

Submitted No.	Reference Document(s)				Questions	Response
	Exhibit / Attachment / Spec Section	**Drawing/ Attachment**	**Page Number(s)**	**Paragraph (s)**		
148					Per the conduit and cable schedule, the feeder cable from the DC switchgear to the OCS pole is aluminum. Per specifications section 34 23 20 the feeder cable is called out to be 500 Kcmil copper cable Class H bare. Please clarify which cable is correct.	To be answered in a future Addendum.
149					What size conduit and cable is required from the "OCS grounding switch operator with kirk key interlock" per detail A / U-TPN34 up to the ground switch?	Conduit size is 2 inch FRE inside conduit. Refer to drawing U-OCSD38 Feeder Configuration for Maintenance Facility.
150					Per sheet U-TPN01, on the Trolley Wire diagram between stations PS 314+86.71 and PS 315+35.23 EB, is the 1-500 KCMIL AL for the trolley wire correct?	To be answered in a future Addendum.
151					When I budget priced the girders for Santa Ana River Bridge to HNTB in 2016, I assumed 6' deep Caltrans Bulb-Tee Girders, which we have provided for previous railroad bridges. Although the contract drawings now show 6' Wide Flange girders, can we substitute 6' Bulb-Tee girders (with similar structural properties) in our bid ?	The substitutuion of girders would require other changes to the design. Please bid according to the plans. See SC-30 for instructions regarding Value Engineering Change Proposals that are considered after contract award.
152	Exhibit B-4 Section 4.30				Traffic Signal plans TSP Opticom vehicle equipment is required. We do not have a quantity or a way to quantify. Please advise.	To be answered in a future Addendum.
153	Exhibit B-4 Section 4.06				The project is replacing loops at most of the locations or installing new Signals with VDS. Please confirm that the new VDS can be used for the temp and then installed for permanent. This is standard practice.	Yes, the VDS can be used for the temporary and installed for permanent. The VDS will have to be accepted by the Cities of Santa Ana and Garden Grove for temporary and permanent use.
154			XN01 to XN023		These plans reference communication plan sheets XN24 to XN33 that are not part of the plan sheets issued for bid. Please advise if they will be issued for use with this bid.	See answer to bidder question No. 61

IFB 7-1904 - OC Streetcar Construction Project
Questions Received

Submitted No.	Reference Document(s)				Questions	Response
	Exhibit / Attachment / Spec Section	**Drawing/ Attachment**	**Page Number(s)**	**Paragraph (s)**		
155		Volume 2, ND03			ND03 depicts the lateral limits of lightweight fill for the retaining walls. Please confirm the following in regards to the longitudinal limits of lightweight fill: 1) Please confirm that the limits of structure excavation 2' beneath the footings as shown on 1/ND03 applies to retaining walls 101/501 only and does not apply to the return walls and backwalls at Abutment 1 for Westminster Ave Bridge. 2) Please confirm that the limits of structure excavation 5' beneath the footings as shown on 2/ND03 applies to retaining walls 108/508, 144/544 and 153/553 only and does not apply to the return walls and backwalls at Abutment 3 for Westminster Ave Bridge and does not apply to the return walls and backwalls at Abutments 1 and 4 for Santa Ana River Bridge. 3) Please confirm that the limits of lightweight fill 2' beneath the footings as shown on 1/ND03 applies to retaining walls 101/501 only and does not apply to the return walls and backwalls at Abutment 1 for Westminster Ave Bridge. 4) Please confirm that the limits of lightweight fill 5' beneath the footings as shown on 2/ND03 applies to retaining walls 108/508, 144/544 and 153/553 only and does not apply to the return walls and backwalls at Abutment 3 for Westminster Ave Bridge and does not apply to the return walls and backwalls at Abutments 1 and 4 for Santa Ana River Bridge.	To be answered in a future Addendum.
156		Volume 2, CX02, CX04, NS01, NS02			NS01 and NS02 depict a 4" AC Cap beneath the track ballast at retained fills but do not provide stationing. The typical sections on CX02 and CX04 show the 4" AC Cap and retaining walls, but the stationing in those sections do not match the limits of the retaining walls. 1) For RW 108/508, please confirm that the 4" AC Cap starts as shown on CX02 (EBT 108+28) and ends at the end of retaining wall 508 (WBT 515+75) as shown on NN07 and does not end as shown on CX02 (EBT 115+00). 2) For RW 144/544, please confirm that the 4" AC Cap starts and ends as shown on CX04 (EBT 144+00 to 148+96). 3) For RW 153/553, please confirm that the 4" AC Cap starts and ends as shown on CX04 (EBT 152+68 to 156+00)	AC Cap limit begins at the end of the bridge approach slab and extends 5-ft beyond the trench drain as shown in the profile of the TA sheets. The trench drain station locations are: EBT STA 114+95.00 EBT STA 144+05.00 EBT STA 155+95.00 The CA drawings were updated and provided in Addendum No. 5 to provide the station locations above.

IFB 7-1904 - OC Streetcar Construction Project
Questions Received

Submitted No.	Reference Document(s)				Questions	Response
	Exhibit / Attachment / Spec Section	**Drawing/ Attachment**	**Page Number(s)**	**Paragraph (s)**		
157	Book 2 Exhibit M-6		Bid Form, Pg 6 Exhibit M-6, page 15		Bid Item 25 is for Overexcavation of Unsuitable Soils. Section 4.2.1 of the Geotechnical Design Report states that areas that preclude compaction should be overexcavated and that geogrids and/or easily compactable material can reduce the depth of excavation. Please clarify the following items for this bid item for pricing purposes: 1) We are assuming that bidders are to price the replacement material using Class 2 recycled Aggregate Base per 2015 California Dept of Transportation Specifications. Please confirm. 2) We are assuming that bidders are not to include geogrids or geotextiles for pricing this item. Please confirm.	Bid Item 25 will be changed in a future Addendum to an Allowance Item. ~~Class 2 aggregate base is acceptable for pricing. We confirm that geogrid is not required for pricing this item.~~
158		ZPS42,43; ZPD21			The wall sections on ZPS42 and ZPS43 show a waterstop at the construction joint between the main building slab and the wall curbs beneath CMU and Gypsum walls. However, the referenced detail, 2/ZPD21, does not show this waterstop, nor do the structural drawings. Is a waterstop required at the perimeter curb/main slab interface beneath gypsum and/or cmu walls?	To be answered in a future Addendum.
159		ZPN16			Drawing ZPN16 indicates ceiling areas to receive spray-applied fireproofing, but we find no spec section for spray-applied fireproofing. Please provide a spec for the spray-applied fireproofing. Please indicate if any structural steel is to receive the spray-applied fireproofing, or if only the metal decking receives this treatment.	Drawings will be revised in a future Addendum to show that spray applied fireproofing is not required, but instead structural steel beams supporting the slab above the 1-hour rated rooms shall be 1-hour rated for their entire span through either intumescent paint or one layer of 5/8" Type-X gypsum board on all sides, taped and fire chaulked to the metal deck.

IFB 7-1904 - OC Streetcar Construction Project
Questions Received

Submitted No.	Reference Document(s)				Questions	Response
	Exhibit / Attachment / Spec Section	Drawing/ Attachment	Page Number(s)	Paragraph (s)		
160		ZPD21			1/ZPD21 (waterstop detail) shows "continuous fluid applied waterproofing at sub-grade conditions". However, waterproofing is otherwise only shown on the drawings at the car wash, and elevator sump pit. Is fluid-applied waterproofing required at all sub-grade conditions?	Sheet waterproofing or cold fluid-applied waterproofing shall be employed underneath and at all sides of pits below the finished first floor, to the bottom of first floor slab. It shall be at the Contractor's discretion to employ the system or combination of systems that ensure a waterproof enclosure.
161		FN44A			FN44A depicts the work at the intersection of 4th street and Ross street occurring during a full intersection closure. There is a significant amount of work at this location associated with welding and special trackwork installation that would prevent it from being done overnight or on a two day weekend. How long can this intersection be closed?	Special Trackwork is west of Ross Street. Per Special Condition 6.3.6, Ross Street can only be closed for night work.
162		TD12 & TD02			On drawing TD02, in Detail B, the transverse and longitudinal track-slab rebar spacing is shown as 24" max both ways. In several other depictions of the track- slab such as on drawing TD12, in Section A, the rebar is shown at approx 12" spacings. Please confirm that the embedded track-slab rebar spacing is 24" max both ways and that the top bars are actually #3s?	To be answered in a future Addendum.
163		Z-DD15			On drawing Z-DD15, in Section 2, the longitudinal spacing of the transverse rebar in the track-slab infill pour, is not shown. It appears that the dowel spacing identifier is pointing at the wrong place. Are the #4 dowels to be 4 each transverse at 12" longitudinal spacing? Are the dowels to be epoxy coated or set in epoxy? Is the center-top transverse bar a #4 or a #5? Is the longitudinal spacing of this bar 12"?	1) Yes--#4 dowels, 4 each transverse at 12" longitudinal spacing. 2) Dowels are set in epoxy. They are not epoxy coated. 3) Center-top transverse bar is #4 4) Longitudinal spacing of center -top transverse bar is 12". Drawing Z-DD15 will be revised in a future addendum.
164		U-CCD11 & TD02			Drawing U-CCD11 shows track-slab longitudinal rebar, for stray current collection, at 12" spacing. This rebar is shown at 24" spacing on Drawing TD02. Please confirm that the collectors shall be welded to rebar that are at 24" spacing.	To be answered in a future Addendum.

IFB 7-1904 - OC Streetcar Construction Project
Questions Received

Submitted No.	Reference Document(s)				Questions	Response
	Exhibit / Attachment / Spec Section	**Drawing/ Attachment**	**Page Number(s)**	**Paragraph (s)**		
165		U-CCD14 & Z-DD15			Both Section 2 on Drawing Z-DD15 and Section 6 on Drawing U-CCD14 are depictions of track-slab within the MSF. They do not match. Please provide a revised Drawing U-CCD14 that depicts the required section and collector bar as shown on 2/Z-DD15.	To be answered in a future Addendum.
166		U-CCDXX			The Stray Current Corrosion Control drawings do not include requirements for the embedded MSF yard tracks or the Car Wash track. Please provide the requirements for the embedded MSF yard tracks and the Car Wash track, or state that none is required.	To be answered in a future Addendum.
167					Reference Addendum #2 which revised the date for receipt of questions to February 7, 2018. Due to the size and complexity of this project, we would like to request that the date for receipt of questions be extended to February 27, 2018, which is 2 months prior to the bid date of April 27, 2018.	Addendum No. 6 revises the date for receipt of questions to March 16, 2018.
168	Reference IFB – Book 1 – Section III, page 75 – item 4.0 – DBE Bid Submission Requirements				This section indicates that the DBE Participation Commitment Form, the Bidders List, and the DBE Information-Good Faith Efforts package are to be submitted with the bid. We would like to request that these DBE forms be submitted by the three lowest bidders within 4 business days after the bid date. This is standard practice in the industry and is followed by agencies such as RCTD, ACE, SBCTA, and Caltrans to name a few.	Good Faith Efforts, DBE Participation Commitment letters and Bidders Lists must be received by the AUTHORITY no later than 4:00 pm on the 2nd business day after bid opening if they are not submitted with the bid.
169					SC 26.2, 26.3 and 26.4 all make reference to settlement periods. Westminster Bridge Abutment 1 and Walls 101/501 require a 1 month settlement period. Westminster Bridge Abutment 3 and Walls 108/508 require a 4 month settlement period. Santa Ana River Bridge Abutment 1 and Walls 144/544 require an 8 month settlement period. Santa Ana River Bridge Abutment 4 and Walls 153/533 require a 6 month settlement period. Due to these settlement periods likely being on the critical path, especially those concerning the Santa Ana River Bridge, please clarify exactly how many calendar days of settlement are going to be required at each location. The measurement of a month in these instances is not specific enough.	Settlement periods identified in 26.4 will be revised as follows: 1 month will be changed to 30 calendar days, 4 months will be changed to 122 calendar days, 6 months will be changed to 183 calendar days, and 8 months will be changed to 243 calendar days.

IFB 7-1904 - OC Streetcar Construction Project
Questions Received

Submitted No.	Reference Document(s)				Questions	Response
	Exhibit / Attachment / Spec Section	Drawing/ Attachment	Page Number(s)	Paragraph (s)		
170					The descriptions of Traffic Management Segments 2 through 5 in Exhibit I-2 allows full closures of “major intersections” during nights and weekends for track work. Special Conditions Section 6.3 states that partial intersection closures will be allowed at major intersections – which are “limited to night work between the hours of 10 PM and 5 AM.” Please confirm that: a. full closures of major intersections are allowed and b. major intersections can be closed for an entire weekend. c. Also, please specify start and end times for weekend closures.	The Traffic Management Plan, Exhibit I-2, considered a range of traffic handling and construction phasing scenarios. Per Article 13 of the Construction Agreement, Special Condition Section 6.3 takes precedence, and limits closures at major intersections to night work between the hours of 10PM and 5AM. See responses to questions 46 and 47.
171					Special Conditions Section 6.3.4 states that “Segment 2 shall be constructed so no more than one subsegment is constructed at a time.” Are the subsegments 2A and 2B or are the subsegments 2A(1), 2A(2), 2A(3), and 2B(1)? Please clarify.	Please note that per question 44, subsegments of Segment 2 in SC-6.3.4 have been revised to 2A(1), 2A(2), 2B(1), and 2B(2) in Addendum No. 5. Each of these are considered to be a subsegment.
172					Regarding access to the Santa Ana River (SAR) Bridge via the existing channel. The notes on plan sheet 642 refer to the use of steel plates and fill dirt to protect the existing channel lining. Access to the channel bottom with large equipment is required for but not limited to the following activities: removal of existing concrete lining, CIDH pile drilling, and precast girder erection. Please provide the allowable access locations to enter and exit the channel with heavy equipment.	Access to the Santa Ana River channel bottom is via Fairview Ave, west embankment, through a gate, and down an existing ramp from the top of bank to the river channel bottom.
173					Reference plan sheet 627 for the Westminster Bridge. The girder longitudinal section detail for post tensioning does not match the typical section dimensions shown on plan sheet 626. The bottom slab thickness is shown to vary from 6” to 3’. The full depth of the CIP girders is shown as 4’9” on plan sheet 626, detail 1. Please verify and provide the correct dimensions.	To be answered in a future Addendum.
174					Project special conditions section 6.4.2 prohibits pile driving on this project. However the temporary shoring for pier construction at the SAR Bridge and the retaining wall construction will require the use of vibratory hammers to drive sheets. Please confirm that sheet piling for temporary shoring at the Santa Ana River bridge and for retaining wall construction along the PE ROW will be permitted.	To be answered in a future Addendum.

IFB 7-1904 - OC Streetcar Construction Project
Questions Received

Submitted No.	Reference Document(s)				Questions	Response
	Exhibit / Attachment / Spec Section	**Drawing/ Attachment**	**Page Number(s)**	**Paragraph (s)**		
175					Reference plan Sheet DN-18- Section G/ DN-18. This detail shows the approach slab extending beyond the return wall and overlapping the retaining walls. The plan view shows the approach slabs are inside the return walls. Please verify and provide the correct detail.	To be answered in a future Addendum.
176					Reference plan Sheet DN-18- Section G/ DN-18. This detail shows the 3 Inch plastic pipe from the retaining wall and along the return wall. However the plan view does not show the pipe along the retaining wall. Please verify and provide the correct detail.	To be answered in a future Addendum.
177					Reference plan Sheet DN-18- Detail 2. This detail shows a filter fabric for geo-composite drain. Is it the intent that this fabric wrap around the full depth of geo-composite drain? Or is it only required around the top. Please clarify.	To be answered in a future Addendum.
178					Please provide the as built drawings for the existing Santa Ana River bridge.	To our knowledge, as built drawings do not exist for the Historic Santa Ana River Bridge. We know that is is a Pegram Truss, built in 1907 as part of the Pacific Electric Railway that operated until 1950.
179					Please verify the quantity for Bid Item No. 55 – 48” CIDH Piling	To be answered in a future Addendum.
180	General Conditions - 41			GC-41 Product Options, Supplier Approvals, and Substitutions	Per addendum 2, all questions and approved equals are due to the owner by February 7, 2018. The GC-41 states that request shall be made within thirty-five calendar days from the Notice to Proceed with Construction…..unless later submission of request is agreed to by the authority. These dates do not align regarding approved equals. Please clarify which timeline is correct. In addition, we respectfully request that submission of approved equals be carried throughout the life of the project in order to provide the best product per application, reduce cost and increase project efficiency.	The IFB provides for two distinct timeframes and processes for product substitution. During the bidding period, if the bidder wishes to receive AUTHORITY's approval of substitution(s) prior to submission of bid, then the bidder should adhere to the deadline indicated by the AUTHORITY, as modified by Addenda. Postaward requests are covered in GC-41. No change to the requirement.

IFB 7-1904 - OC Streetcar Construction Project
Questions Received

Submitted No.	Reference Document(s)				Questions	Response
	Exhibit / Attachment / Spec Section	**Drawing/ Attachment**	**Page Number(s)**	**Paragraph (s)**		
181	Special Conditions - 7			SP-7 Permits and Fees, (7.2) CONTRACTOR Acquired Permits	Per the Special Conditions 7.2, CONTRACTOR - Acquired Permits, the Authority list permits a through h. Can the Authority provide the fee associated with each permit?	The contractor will not have to pay for any of these permits. Per General Condition, the AUTHORITY is responsible for SWPPP Permit fee. The rider to the OCFCD Encroachment Permit will be no cost. The AUTHORITY has Construction Agreements with the Cities of Santa Ana and Garden Grove that states: "The AUTHORITY, and/or its Construction Contractor(s), shall not be charged for the CITY's fixed cost permit issuance fees for building and street work permits deemed necessary for the Project." SC-7.2 will be revised in a future Addendum to delete the requirement to pay for permits.
182	Special Condition - 28			SC-28 Systems Integration Testing and Start-Up/Pre-Revenue Service	Please clarify who will be responsible for the cost of power during the System Integration and Streetcar Testing period?	Per SC-6.6.1, and response to Bidder Question No. 69, the AUTHORITY is applying for permanent utility services in their name, meaning that bills for permanent services will go to the AUTHORITY from the time new service is established. Per SC-6.6.1, the CONTRACTOR will be responsible for temporary utility services. The AUTHORITY will pay for permanent services during System Integration and Streetcar Testing period.

IFB 7-1904 - OC Streetcar Construction Project
Questions Received

Submitted No.	Reference Document(s)				Questions	Response
	Exhibit / Attachment / Spec Section	Drawing/ Attachment	Page Number(s)	Paragraph (s)		
183	Special Condition - 6			SC-6 Work Description, Segments, Sequence & Constraints, (6.3) Description of Work Segments and Work Restrictions	Per the special conditions section 6.3 Description of Work Segments and Work Restrictions, "The Work shall be performed in conformance with the phasing and staging of construction shown on the Plans and indicated below. Non-conflicting Work in subsequent stages may proceed concurrently with Work in preceding stages, provided satisfactory progress is maintained in the preceding stages of construction, subject to approval of the Engineer in advance." Please clarify the following: 1. Will the Contractor be allowed to work in multiple segment at any time as long as work is concurrent within each segment? 2. Will the Contractor be allowed to work in Segments 1 and 2 concurrently? 3. Will the Contractor be allowed to work in Segments 2 and 3 concurrently? 4. Will the Contractor be allowed to work in Segments 2 and 4 concurrently? 5. Will the Contractor be allowed to work in Segments 2 and 5 concurrently? 6.Will the Contractor be allowed to work in Segments 3 and 4 concurrently? 7. Will the Contractor be allowed to work in Segments 3 and 5 concurrently? 8. Will the Contractor be allowed to work in Segments 4 and 5 concurrently?	Per the second sentence in SC-6.3, "Non-conflicting Work in subsequent stages may proceed concurrently with Work in preceding stages, provided satisfactory progress is maintained in the preceding stages of construction, subject to approval of the Engineer in advance." Approval to work concurrently in the seqments listed in questions 1-8 may be given based on whether satisfactory progress is maintained in the preceeding states of construction. The Engineer will balance the construction schedule against impacts to the community (traffic, parking, noise, dust, etc.).
184	Special Condition - 6			SC-6 Work Description, Segments, Sequence & Constraints, (6.2) Coordination of Work with Others	Per the special conditions section 6.2 Coordination of Work with Other, "It is anticipated that work by other contractors, municipalities and utility companies may be in progress adjacent to and within the limits of this Project during progress of the Work on this Contract." Please identify all anticipated work by "others", provide an anticipated schedule for the work and locations.	Please refer to the City of Santa Ana's Planning Department web site: http://www.ci.santa-ana.ca.us/pba/planning/ or request a list of projects by emailing MMcCann@santa-ana.org. This is not necessarily going to reflect all projects that may occur during the life of the Project. SC6.2, Coordination of Work with Others, will still apply.

IFB 7-1904 - OC Streetcar Construction Project
Questions Received

Submitted No.	Reference Document(s)				Questions	Response
	Exhibit / Attachment / Spec Section	**Drawing/ Attachment**	**Page Number(s)**	**Paragraph (s)**		
185	Special Conditions - 10			SC-10 Contract Data Submission Requirements, (10.6) Time For Submittals	Per the special conditions section 10.6 Time For Submittals, states that the CONTRACTOR can assume that AUTHORITY will review and return all submittals within thirty (30) calendar days after receipt of a complete submittal. Due to the number long lead material items and prescribed sequencing of the project this will have a significate effect on the overall construction duration of the project. We respectfully request that this time period be reduced to 14 calendar days and/or a time period that is less than 30 to facilitate a seamless submittal process.	As is emphasized in Article 1 of the Construction Agreement and General Condition 30, time is of the essence. SC10.6's intent is to be sure that submittals are received by the AUTHORITY sufficiently in advance of the required approval date to allow necessary reviews to be completed. The AUTHORITY will not reduce the specified duration, however, the CONTRACTOR may request a shorter review period for long lead items that require early submittal and the AUTHORITY will strive to complete reviews in less than 30 days and prioritize reviews in accordance with the CONTRACTOR's schedule.
186	Technical Spec Book 1B Exhibit B-2			Section 41 22 13.13	Per plan sheet 2-HD02 (931 of 1520), the 7.5 Ton Bridge Crane is supported from post and includes 14x132 steel beams on grid line 8. Please clarify the connection on gridline 9 and confirm that this 7.5 Ton Bridge Crane is to be supported by the W24X55 that run transversely to the 14x132 and supports the roof structure. Please provide additional details from this connection and rail detail. Please verify the W24x55 are adequate to support the loading from the roof structural and the fully loaded 7.5 Ton Bridge Crane.	At gridline 9, 7.5 Ton Bridge Crane shall only be supported from W36X150 roof beams which occurs on gridlines B, C, D & E. Crane corbel detail shown on 1/Z-DS21 and 7/Z-DD35 is typical, but shall be detailed by the Contractor and submitted for approval via the shop drawing process for Bridge Crane approval. Both bridge cranes (2) will be underhung running and will be supported from the building structure on 5-7 and 8-9. Bridge manufacturer shall provide all supports and attachments to the structural steel building frame as part of the crane packages.

IFB 7-1904 - OC Streetcar Construction Project
Questions Received

Submitted No.	Reference Document(s)				Questions	Response
	Exhibit / Attachment / Spec Section	**Drawing/ Attachment**	**Page Number(s)**	**Paragraph (s)**		
187	Book 1C – Volume 4			Drawing Z-PN10 – Note 7	Note 7 on drawing Z-PN10 states “To provide corner guards at all exterior corners at first floor work areas.” Please provide details for material and dimensions as they are not noted in the drawings or the project specification 10 26 00 Wall and Door Protection.	The requirement is eliminated from the project. Note 7 on drawing Z-PN10 will be revised in a future Addendum.
188	Book 1B – Exhibit 2			Specification Section 10 26 00-2.02.A.1.a	In specifications section 10 26 00 Wall and Door Protection page 5, notes the locations for the wall protection in the Corridors A103, A104, A116 and A127. The Room numbers listed are not referring to correct locations or rooms. Please advise on the intended locations for the wall protection needed in the maintenance building.	Spec. section 10 26 00 will be revised to indicate the room numbers. All walls of corridors A-107, A-113, A-129, A-222, excluding the CMU walls to have wall protections.
189	Various Plan Sheets				Please provide details for the Landings, Crosswalks and Sidewalks shown near each proposed Rail Platform and noted as "SEE PLAN DETAILS FOR ADJACENT PAVEMENT TREATMENT" on Plan Sheet CD11. These areas do not indicate if there is a footing required under the proposed curb, pavement sections, footing terminations and location and/or type of truncated domes required to properly provide accurate pricing. For example, please see Drawing CP01-1EA, CP02-1EA, CP03-1EA, CP04- 1EA, CP05-2EA, CP06-2EA, CP07-2EA, CP13-1EA, CP15-1EA and CP16-2EA.	Refer to Civil Improvement Plans (Volume 2 A) for type of pavement located adjacent to on-street platform locations. Refer to Construction Details for information on platform footings. Refer to Architectural Street Station Stop Plans (Volume 3) for type of truncated domes (tactile warning surface) on platforms. Please see PD01 for truncated dome details on platform.
190					Communication drawings U-COMN02 – U-COMN04, illustrating the interfacility cable plan within the systemwide ductbank show TWC loops at 560+60, 164+75, 172+00, 182+50, 188+20, 191+70, 599+25 & 302+75 that do not appear in the Train Signal Drawings. Please confirm these TWC loops are required.	TWC loop locations are shown on Train Signal drawings. Comms drawings U-COMN02 and U-COMN14 will be updated to reflect TWC loop locations on Train Signal drawings.
191					Communication drawings U-COMN02 – U-COMN04 indicated 4-6PR #18 cables connecting the signal cases to the TWC loops. Train signal cable plans show single 2c#14 connecting the TWC loops. Please clarify TWC loop cable type.	TWC loop cable type is 1-2c#14 as shown in Train Signal plans. Comms drawings will be updated to reflect the 1-2C#14 cable type.
192					Train Signal Drawing U-TSN10 does not show a FO cable linking the vital processor to the rest of the system. Please confirm a 24 strand fiber is required to connect the train signal cabinet at Harbor Blvd. to the train signal cabinet at N. Fairview St.	24 strand fiber is not required to connect the train signal cabinet at Harbor Blvd. to the train signal cabinet at N. Fairview St.
193		Volume 2 - CD14, CD08			For the installation of the sidewalk brick pavers per construction detail drawing CD14 detail (SIDEWALK BRICK PAVERS DETAIL) call out 15A, it is unclear if there is a concrete slab underneath these bricks. Does this brick paver section require a concrete slab and if so please provide the detail?	Sidewalk Brick Pavers Detail should include a concrete slab underneath the bricks and mortar bed. Detail CD14 will be revised and included in a future Addendum.

IFB 7-1904 - OC Streetcar Construction Project
Questions Received

Submitted No.	Reference Document(s)				Questions	Response
	Exhibit / Attachment / Spec Section	**Drawing/ Attachment**	**Page Number(s)**	**Paragraph (s)**		
194		U-TPN33, U-TPN60			Drawing U-TPN33 has a callout showing the dimensions of TPSS#2 to be 14'-4"x38'. Drawing U-TPN60 has a table that shows the length of TPSS#2 to be 44'. Is the length of TPSS#2 38' or 44'?	Size of TPSS #2 is correctly shown on U-TPN08 as 44'-0" internal, 44'-8" overall. Drawing U-TPN33 will be revised in a future addendum.
195	Exhibit M6	DN01 through DN07			Exhibit M6 Foundation / Geotechnical Reports requires excavating 2 feet below bottom of footing level and placing 2 feet of compacted structure fill (See Figure 6 - Grading Foundation Details). The station footing drawings and specifications do not reference or require any additional excavation. Please confirm if the Station Canopy Footings or Station Sign Marker Footings require structure fill to be placed below the footing. If so, please provide specifications and updated plans that reflect the earthwork requirements at the platforms.	To be answered in a future Addendum.
196		CP09 & CA26			Please reference CP09 and CA26, there is a discrepancy between the 2 sheets in Tactile limits. CP09 shows the tactile extending west beyond the west ramp of the EB Sycamore Platform. However civil sheet CA26 does not show the tactile in this location west of the platform. Please confirm the tactile limits. This discrepancy occurs at 4 locations: EB Sycamore Platform - West Side CP09 compared to CA26 EB French Platform - East Side CP10 compared to CA29 EB Lacy Platform - East Side CP11 compared to CA31 WB Lacy Platform - West Side CP12 compared to CA31	Tactile surface limits should extend beyond the platform ramps at each of the four (4) locations indicated. Drawings CP09 through CP12 will be revised and included in a future Addendum.
197		PS11 CP01 to CP16			Reference Plansheet PS11 Typical Center Platform Exterior Elevations. Note 7 on the typical center platform sheet shows 2 EA Stop Markers (one on each end, in the platform ramps). However the platform detail sheets (CP01 to CP16) show one stop marker per center platform. Please confirm the number of Stop Markers for each center platform.	P-PS11 is a generic typical drawing. Please refer to CP (Civil-Platform) drawings for specific types and number of signs. CP01 (Harbor) – No streetcar vehicles are approaching from the west, therefore only 1 stop marker is needed. CP02 (Fairview) & CP03 (Raitt) –One stop marker is provided for eastbound vehicles. The "5' unistrut post with reflector" will be used as a stop locator for westbound vehicles. CP13 (SARTC) – No streetcar vehicles are approaching from the south, therefore only 1 stop marker is needed.

IFB 7-1904 - OC Streetcar Construction Project
Questions Received

Submitted No.	Reference Document(s)				Questions	Response
	Exhibit / Attachment / Spec Section	**Drawing/ Attachment**	**Page Number(s)**	**Paragraph (s)**		
198		TD02 & Civil Drawings			Drawing TD02 detail A and B states "Geotextile Fabric to be Installed Between Subgrade and Aggregate Base for Entire Width of Pavement Cut, Along Sides, and Wrap at Least 1 Foot on Top." It is unclear if this is in reference to having the Geotextile installed just under the track slab or have it extend it to the limits of the civil cut areas. When referring to the civil details, civil cross sections, or civil plan sheets there is no reference to install this geotextile fabric. Please clarify the where geotextile fabric is required.	To be answered in a future Addendum.
199					Impedance bond locations are not shown on the plans; rather they are part of the design build signal scope. Please provide installation and accessibility requirements.	Correct. Train Signal plans will be updated to provide clarification on installation and accessibility requirements.
200		U-TPN28			Can Traction Power and Signal Wires be connected to the rail in a common track box such as the track box shown in U-TPN28? Where there is no traction power connection, do the track circuit and impedance bond connections need to be accessible and be in some sort of track box for future accessibility? If so, please provide detail of the box and connection.	Impedance bonds don't need any other boxes. Installation instructions for them will be added according to question/answer 199. The box referenced on U-TPN28 is for traction power needs.
201		Corridor & MSF			Is electrical grounding required for general Corridor and MSF Site metallic fencing, railings, etc? If so; please provide specifications and details.	To be answered in a future Addendum.
202		ZCN03, ZPG02			Drawing ZCN03 (site construction plan) notes to "see drawing PG02 for signage . . ." However, neither drawing PG02 nor any other MSF site drawing depicts any exterior site signage. Please provide drawings and specifications for any required exterior site signage at the Maintenance and Storage facility.	To be answered in a future Addendum.
203	43 20 00	ZHN04			Drawing ZHN04 locates the engine oil pumps, and windshield fluid washer pump in room 152. However, we find no process piping, nor distribution/dispensing equipment for these products in the maintenance and storage facility plans. Please confirm that there is no distribution piping or dispensing equipment required for gear oil, hydraulic oil, flange lubrication, or windshield washer fluid.	To be answered in a future Addendum.

IFB 7-1904 - OC Streetcar Construction Project
Questions Received

Submitted No.	Reference Document(s)				Questions	Response
	Exhibit / Attachment / Spec Section	**Drawing/ Attachment**	**Page Number(s)**	**Paragraph (s)**		
204	SC-39 GC-55 26 05 00				Within the MSF specifications, various sections refer to a CxA, or Commissioning Agent, and make reference to SC-39. SC-39, however, provides no information on the roles and responsibilities surrounding commissioning of the MSF. Section 26 05 00 , section 1.25I does make reference to the "Owner's Commissioning Authority and Commissioning Agent". With regard to the building commissioning, please clarify the contractor's responsibilities (i.e. who writes commissioning plan, who manages, who provides the commissioning agent, etc.)	To be answered in a future Addendum.
205		U-TPN37 and U-DBN-32			Drawing U-TPN37 has a note for a traction power ductbank coming out of Comms 3'x4' pull box # CPB-654 that states "TO SWBD PB# PB-43A SEE DRAWING U-DBN32". Drawing U-DBN32 does not show a PB-43A. Where do the 2ea 2" conduit runs that leave south from CPB-654 terminate?	Drawing U-TPN37 reference to PB-43A will be changed to PB-41A in a future addendum.
206					Per sheet U-OCSG02, general note 13, it states “Wherever a specific manufacturer item is listed on the drawings, the contractor shall supply that item.” Is it possible to reach out to multiple vendors to provide more competitive pricing?	To be answered in a future Addendum.
207					Santa Ana River Bridge (SAR): This Bridge is designed with Pre-stressed girders to avoid false work in the river channel. Piers with Hammer head caps would have completely eliminated false work altogether. However the present design requires support towers at the piers to build the diaphragms. Constructability issues have defeated the purpose of doing away with false work. Please re-visit and modify the design.	To be answered in a future Addendum.
208					Santa Ana River Bridge (SAR): Per current drawings and design, temporary false work towers are required at Piers 2 and 3. This means building temporary pads underneath the support towers. Please verify and confirm that the 404 permit allows for this.	To be answered in a future Addendum.
209					Reference SC-53.4, B 48 and 49. Subsection “b” under both items 48 and 49 include the identical description of work to be included for payment. Please clarify the scope of work to be covered in bid items 48 and 49.	To be answered in a future Addendum.

IFB 7-1904 - OC Streetcar Construction Project
Questions Received

Submitted No.	Reference Document(s)				Questions	Response
	Exhibit / Attachment / Spec Section	Drawing/ Attachment	Page Number(s)	Paragraph (s)		
210					Will OCTA provide list of pre-qualified OCS Subcontractors for this project?	The AUTHORITY will only release the names of prequalified prime contractors. The most release list was issued as part of Addendum No. 5 and will be updated as necessary
211	34 11 28	TW03-TW06, TW09, & TW10			We find no rebar details (cross section, sizing, spacing) for special track work. Please provide Rebar requirements for embedded special trackwork, and Rebar and Doweling requirements for D.F. special trackwork.	To be answered in a future Addendum.
212	27 05 33				Spec section 27 05 33 - 2.01.A states that conduits are to conform to ASTM F512 for pvc materials. ASTM F512 covers five types of pvc conduit material. Those five types are EB-20, EB-35, DB-60. DB-100 and DB-120. Spec section 27 05 33 - 3.02.C.4 states that all conduit within ductbanks shall be Schedule 40 PVC. Are the conduits from the ductbank drawings to be of EB/DB material as per ASTM F512 or are they to be schedule 40? Please provide a designation if they are to be EB/DB.	To be answered in a future Addendum.
213	34 42 28				Spec section 34 42 28 gives requirements for Embedded Power Switch Machines. Non-Embedded Machines are required for the Ballasted (non-AC Paved) and D.F. Special Trackwork. Please provide specifications for Non-Embedded Power Switch Machines.	To be answered in a future Addendum.
214	TW02, TW03, TW07, Z-TN01				Drawing TW03 mis-identifies 3 Yard turnouts as Concrete Embedded Turnouts. Should these yard turnouts actually be AC Paved Ballasted turnouts as shown on TW02? Also, please confirm that since all 7 of the 25M yard ballasted turnouts are AC paved (Z-TN01); all of the Notes on Drawing TW07 should apply to them.	To be answered in a future Addendum.
215	34 11 23				Spec 34 11 23 paragraph 2.15A states "All special trackwork to be embedded in concrete shall be fully insulated..." Please confirm that concrete includes AC Paving.	To be answered in a future Addendum.
216	U-CCD01 thru U-CCD16				Which Spec Section is associated with the "Stray Current Corrosion Control" work shown on Drawings U-CCD01 - U-CCD16? If no spec exists for this specific work; please provide.	To be answered in a future Addendum.

IFB 7-1904 - OC Streetcar Construction Project
Questions Received

Submitted No.	Reference Document(s)				Questions	Response
	Exhibit / Attachment / Spec Section	**Drawing/ Attachment**	**Page Number(s)**	**Paragraph (s)**		
217	U-CCD11 & U-CCD15				On Drawing U-CCD11 in the "Crossovers/Turnout/DFT Collector Bars" Detail a Test Station Box is shown and noted as (Field Located). Are these boxes to be in addition-to the boxes tabulated on U-CCD15. If so; are we correct to assume 1 box per piece of Special Trackwork?	To be answered in a future Addendum.
218		Ductbank and Structure Drawings			Please provide details of how the ductbank conduits transition across the bridge/approach slabs. Will slip couplings, expansion/deflection couplings, plates or other seismic devices be required?	To be answered in a future Addendum.
219	32 17 26 32 17 27	CP01-CP16			Many landing and crossing Detectable Warning Panels are not clearly labeled in the Platform Detail Drawings (CP01-CP16) they are also not labeled in the Civil drawings. At several locations detectable panels are shown but not specified with any notes or call outs. Please provide Detectable Warning Panels details for the following locations: CP01 - Harbor Platform, Bottom of East Ramp Track Crossing CP04 - EB Bristol Platform, Bottom of East Ramp CP05 - WB Bristol Platform - Bottom of West and East Ramp CP06 - EB Flower Platform - Bottom of West and East Ramp CP07 - WB Flower Platform - Bottom of West and East Ramp CP15 - WB Sycamore Platform, Bottom of East Ramp CP16 - WB French Platform, Bottom of West and East Ramp	To be answered in a future Addendum.
220	27 05 20	P-PS22			Please clarify the contractor scope regarding owner provided TVMs and Ticket Validators. (NIC Not in Contract Devices) Will Contractor be required to transport or install devices on site? Will contractor terminate power or communication wires to the devices? Will the contractor be required to provide any testing or troubleshooting support of these devices?	Per 27 05 33, CONTRACTOR shall install conduit, free from debris, sand, or gravel, protected by suitable caps or plugs, with pulling cord--to each TVM and Ticket Validator location. CONTRACTOR will not be required to transport, install, connect, or test the TVMs or Ticket Validators.
221	10 73 43 - 17 Paragraph E-2				Shelter Stop - Shop Assembly Please confirm the required Mock-up can be provided and inspected off site at the manufacturing location.	Yes the Mock-Up can be provided and inspected off site at the manufacturing location.

IFB 7-1904 - OC Streetcar Construction Project
Questions Received

Submitted No.	Reference Document(s)				Questions	Response
	Exhibit / Attachment / Spec Section	**Drawing/ Attachment**	**Page Number(s)**	**Paragraph (s)**		
222		P-BD03			Conduits Encased in Red Concrete P-BD03 requires red concrete encasement for power conduits. However no specification supports this. Please confirm which conduits on the project require encasement with red concrete and provide the limits/details/specifications as required.	To be answered in a future Addendum.
223	34 21 50 - 3.02.A.9				Spec section 34 21 50 - 3.02.A.9, Basic Electrical Materials and Methods - Traction Power, states that where conduits cross structural expansion joints, conduit expansion and deflection fittings, as specified in Paragraph 2.06 of these Specifications, shall be installed at the expansion joint. Please provide a drawings, detail or any information as to where this statement applies. Please confirm this applies to Traction Power conduits only.	To be answered in a future Addendum.
224		CX-16 LN20 LN28			Typical Section SARTC - SANTIAGO ST EBT STA 315+96.91 to 316+59.91 depicts decomposed granite between the track slab and railing at the SARTC East Terminus. Landscape Plans LN20 and LN28 do not show DG, or any planting or hardscape improvements at this location. The area between the tracks is also blank on these sheet. Please specify if any landscaping or hardscaping is required in the portion of the SARTC East Terminus that is enclosed by handrail.	To be answered in a future Addendum.
225					The current deadline for questions and approved equals is February 28th. We are striving to thoroughly review the documents and send all our questions in a timely manner before the current deadline. However, general feedback from subcontractors and suppliers within the industry is that they are hesitant to start document review and pricing efforts because the bid date is over two and half months away. Please consider extending the deadline for questions and approved equals to Wednesday, March 28th. This will allow for greater input from Subcontractors and Supplier interest for this pursuit and OCTA will have 1 month to review questions. If the deadline is not extended, subcontractors and suppliers may not bid the project or un-needed contingencies may be included in the pricing.	Addendum No. 6 revised the deadline for questions and approved equals to March 16, 2018.

IFB 7-1904 - OC Streetcar Construction Project
Questions Received

Submitted No.	Reference Document(s)				Questions	Response
	Exhibit / Attachment / Spec Section	Drawing/ Attachment	Page Number(s)	Paragraph (s)		
226					In Specification 34 21 76 Section 1.01.A.1 it states "… a (SCIS) for remote control and Indication of Traction Power…" In general, what level of "Control" decisions does the SCITC panel PLC (the SCIS) have in operation of breakers in the TPSS? Who makes local Traction Power decisions (like transfer trip) – the SCIS or remote RTU?	To be answered in a future Addendum.
227					In Specification 34 21 76 Section 2.01.A.2 it states a "plate shall be used for Terminal blocks…between SCIS and remote SCADA RTU". This statement seems to imply there are hardwire connections between the SCITC and the SCADA RTU. Is this correct? In 3.02D there is mention of a communications connection. Is it both? Which OCTA drawing shows this connection method?	To be answered in a future Addendum.
228					In Specification 34 21 76 Section 3.02.D it states to "Identify the communication protocol". What is preferred communication media for the connection of SCITC cabinet and SCADA RTU? The Technical specs and drawings appear conflicting and show SCADA commmunications as both serial and Ethernet, fiber and twisted pair, and MODBUS TCP (which is Ethernet). Please clarify.	To be answered in a future Addendum.
229					In Specification 34 21 76 Section 2.03.A it states "I/O and field connective peripherals; and drawing 1116 of 1520 Typical TPSS SCADA Points". Drawing 1116 (typical TPSS SCADA Points) implies all SCADA I/O is discrete. But the specifications mention smart devices may provide I/O. Is there a preferred method or is this open to the contractor?	To be answered in a future Addendum.
230					In Drawing #1115 "Typical Interface Block Diagram" it shows SCADA I/O from the switchgear and Rectifiers going direct (via communications) to the SCADA RTU. Where is the SCIS (and the SCITC) in this drawing?	To be answered in a future Addendum.
231					In Drawing #U-TPN07 it shows FDR 172-3 & 172-4 "FUT SPACE ONLY". Does the authority want empty DC Switchgear cells with rear access doors built into the building or does the authority want open space for future DC Switchgear cells and no rear access doors integrated into the building?	To be answered in a future Addendum.
232					In Specification 34 21 15 Section 1.05.B.5 (Substation Enclosure) calls for submittal of "Certified test results for thermal and electrical". This needs further definition. Please clarify per what standards or specification detail the test procedures.	To be answered in a future Addendum.

IFB 7-1904 - OC Streetcar Construction Project
Questions Received

Submitted No.	Reference Document(s)				Questions	Response
	Exhibit / Attachment / Spec Section	**Drawing/ Attachment**	**Page Number(s)**	**Paragraph (s)**		
233					Will the Authority provide an allowance to repair existing damaged sound walls under Force Account throughout the PE ROW as there are several locations that are current damaged?	There are no plans by the AUTHORITY to repair existing walls along the PE ROW. The bidders attention is directed to SC-20, Pre-Construction Surveys.
234	General Conditions Article 11 Page 10 of 59			Article 11 Insurance, (A) Item Number (1)	Per the contract documents, the insurance requirements for the prime and subcontractors are as follows: a. GL/Excess limit $5MM occurrence AND $20MM Aggregate b. Contractors Pollution Liability limit $5MM per claim and $10MM Aggregate c. Cyber Liability $5MM per claim and $5MM Aggregate d. Professional Liability $5MM per claim and $5MM Aggregate The majority of subcontractors and a DBs will not have this coverage which will preclude them from bidding on the project. Please revise this spec for the subcontractors to include the following: a. GL: Per Occurrence $1,000,000 b. General Aggregate $2,000,000 c. Products/Completed Operations Aggregate $2,000,000 d. Personal & Advertising Injury Limit $1,000,000 e. Excess Liability is $5,000,000. Please exclude the following for subcontractors and DBEs: a. Pollution Liability b. Cyber Liability c. Professional Liability	To be answered in a future Addendum.
235	Special Condition 6.4			Working Hours and Other Work Restrictions	Per the special conditions section 6.4, "The CONTRACTOR will be required to plan all construction to limit residential driveway access restrictions to a maximum of three consecutive days, but no more than 10 single-day access restrictions per driveway over the entire duration of the Project." Please clarify the meaning of "access restriction" and if the intent of this statement is "full driveway closure"?	By "access restriction" we mean that the resident or business owner or their visitors, customers, vendors, etc. are unable to use the driveway in a manner consistent with their typical use. The CONTRACTOR shall work with AUTHORITY Public Outreach and the affected properties to confirm that construction activities minimize and don't exceed the maximum number of "access restrictions".

IFB 7-1904 - OC Streetcar Construction Project
Questions Received

Submitted No.	Reference Document(s)				Questions	Response
	Exhibit / Attachment / Spec Section	**Drawing/ Attachment**	**Page Number(s)**	**Paragraph (s)**		
236	Special Condition 6.6			Coordination with Utility Work and Work by Others	Per the special condition section 6.6, the Authority identifies 10 third party utility owners that will be responsible for adjusting and relocating conflicting utilities. Per Exhibit J the utility relocation plans for each agency will be provide during the bidding process. Please provide the utility relocation plans and a utility matrix used during design that includes all utility crossings, utilities that will be completed prior to construction, anticipated remaining utilities to be relocated during the construction phase and utilities to be protected in place.	Utility relocation plans for each third party utility will be provided in a future Addendum.
237	General Conditions Exhibit A Section 37 Safety Provisions			37.15	Section 37.15 states "A rigging plan is required for all lifts". Please clarify the Authority's definition of "rigging plan" and also "all lifts". Will the Authority modify "all lifts" to "Critical Lifts" as defined per California Code of Regulations and OSHA?	See response to bidder question no. 126. Critical lifts are identified and explained in Level 3 Safety Specifications, Section 2.13 Cranes, item C. Engineered Critical Lifts. The AUTHORITY will not modify these definitions.
238	Contract Plans Book 1C Volume 2				On Dwg. CA10 (sheet 198 of 1520) east of the Fairview Platform between the proposed new track alignment & Detectable Warning Surface there is PCC designated. Please clarify the PCC section required?	To be answered in a future Addendum.
239	Contract Plans Book 1C Volume 2				On Dwg. CA20 (sheet 208 of 1520) there are dashed lines outside of the (1) Curb on the southwest and southeast corner of Shelton. Please clarify that this is Detail (13), remove and replace existing HMA.	To be answered in a future Addendum.
240	Contract Plans Book 1C Volume 2				Dwg. CA27 at the Main Street Intersection calls out (35B) Place 8” PCC Over 6” AB, but also states to see Note 1 which states, “For Limits of Stamped Concrete at Intersection see Construction Detail CD14 which is stamped concrete and score lines and 8” PCC Over 4” AB. Please clarify which detail is to be used.	To be answered in a future Addendum.
241	Contract Plans Book 1C Volume 2				Per Dwg. CA27 and 28 (sheet 216 of 1520) on east 4 th Street in the westbound lane at intersection of N Bush St, there is a call out for note (36) 6” PCC Over 6” AB on both the east and west side of N Bush Street. Please clarify the limits of the 6” PCC Over 6” AB as the drawing is unclear.	To be answered in a future Addendum.

IFB 7-1904 - OC Streetcar Construction Project
Questions Received

Submitted No.	Reference Document(s)				Questions	Response
	Exhibit / Attachment / Spec Section	**Drawing/ Attachment**	**Page Number(s)**	**Paragraph (s)**		
242	Contract Plans Book 1C Volume 2				On Dwg. CN05 & CP13, there is 1EA Detectable Warning Surfaces indicated on the Platform and 2 additional Detectable Warning Surfaces indicates adjacent to the parking area near the metal handrail. Please clarify which type of Detectable Warning Surfaces are to be used at these locations.	To be answered in a future Addendum.
243	Contract Plans Book 1C Volume 2				Please clarify if the Authority will require a steel plate incorporated in the curb within the limits of the bus stops?	There are no bus stops being constructed as part of this project.
244	Contract Plans Book 1C Volume 2				The project plans and typical cross sections indicate AB under several locations of the proposed curb, gutter and sidewalk with no thickness or descriptive section and refer the contractor to the standard plans. The standard plans do not show the proposed AB. Please clarify the required section of AB under the following locations: 1. (14) Longitudinal Gutter per SSPWC STD Plan No. 122-2 on Dwg. CA25, CA26 and CX13 (Plan sheets 213, 214 &282 of 1520) 2. (11) A-1-6 Curb per SPPWC STD Plan No 120-2 on Dwg. 25 (Plan sheet (282 of 1520) 3. (2A) A3-6 (150) Curb & Gutter on Dwg. CA16 (Plan sheet 204 of 1250) Clarify locations of 6" and 12" requirements 4. (1) Type A-2-6 Curb & Gutter 5. (2) Type B-1 Curb Mod per detail Dwg. CD07 6. (10) Type A-2-8 Curb & Gutter per C.A.S. STD Plan 1101 7. (16 Cross Gutter per C.S.A. STD Plan No. 1109 8. (17) A-8 Curb C.G.G. STD Plan No. B-112 9. Bus Pads at Bristol and W Santa Ana Blvd on Dwg. CA18 10. (11) Curb per SPPWC STD Plan 120-2 in the MSF area shown on Book 1C Volume 4, Dwg. z-CN03. Please clarify CMB thickness.	To be answered in a future Addendum.

IFB 7-1904 - OC Streetcar Construction Project
Questions Received

Submitted No.	Reference Document(s)				Questions	Response
	Exhibit / Attachment / Spec Section	**Drawing/ Attachment**	**Page Number(s)**	**Paragraph (s)**		
245	Special Conditions 53.1 for Bid Item 15				Per Special Conditions 53.1 – Item Measurement and Payment Bid Item 15. Removal and Disposal of Contaminated Soils “The work of this item includes investigation, testing and excavation for Contaminated Soils if encountered” AND Special Conditions 14.1 – Contaminated Soils “For all soil excavation in the PE ROW, remove the top one (1) foot separately and place in separate stockpile, not to be mixed with excavation of soil 1-FT below existing grade.Test the excavated soil and appropriately handle/dispose of contaminated soil based upon test results.” PLEASE CLARIFY THE FOLLOWING: It appears under SC 53.1 for Bid Item 15 – Removal and Disposal of Contaminated Soils, the testing for contaminates will be performed in-situ. If that is correct, is the contractor required to remove the top one (1) foot, stockpile and test? It seems the two sections are contradicting each other. Please clarify if all work irrespective of means and methods will be covered under the allowance?	To be answered in a future Addendum.
246	Book 2, Book 1C Volume 2, Book 1B Exhibit B-01 02 41 13 and Book 1D Exhibit M-4			Bid Form Pg 5 & 6 Item 18, 23 & 36 and RN11 to RN17	Per Addendum 5 questions and answers 57 and 58, the removal of various items encountered will "be paid for inder Bid Item 23, Remove Buried Man Made Objects". Please clarify how the material to replace the void, if encountered, will be compensated.	If various items are removed under the Allowance for Bid Item 23, backfill to replace the void will be included in the Allowance for Bid Item 23. SC53.23 will be revised in a future Addendum to include backfill.
247	Special Conditions 53.1 - Item Measure and Payment Bid Item 25. Over-excavation of Unsuitable Soils				Per the description for Bid Item 25, the bid item only covers the description of work and given quantity of 6,000 CY. Without location/area/limit/depth of unsuitable excavation, the unit pricing could vary drastically from each team bidding. We have no way of knowing if shoring will be required, the production and type of equipment could vary depending on quantities, access for each location etc. With all the possibilities that could affect this item work without knowing any details, for bidding purposes this item should be revised to an Allowance Item.	Bid Item 25 will be be changed to an Allowance Item in a future Addendum. The response to Submitted No. 157 has been changed in Addendum No. 7.
248	Contract Plans Book 1C Volume 2				Please provide a section identifying the proposed thickness of the Decomposed Granite (D.G.) at TPSS #4 shown on Dwg. LN20 (sheet 442 of 480).	To be answered in a future Addendum.

IFB 7-1904 - OC Streetcar Construction Project
Questions Received

Submitted No.	Reference Document(s)				Questions	Response
	Exhibit / Attachment / Spec Section	**Drawing/ Attachment**	**Page Number(s)**	**Paragraph (s)**		
249	Technical Specifications 31 23 19 Dewatering			Section 1.05G Monitoring Wells	Per the specification the Contractor is required to install Monitoring Wells prior to excavation at both Santa Ana – Pier Excavation and Westminster – Abutment Excavation. Will the Contractor be required to remove the monitoring wells or will they remain in place post construction?	To be answered in a future Addendum.
250	SC-19 Automated Time Lapse Camera				Per the Special Conditions, Section 19.2 the Contractor is to provide 2 Automated Camera Systems hower the locations of these systems is not specified. 1. Will the contractor be required to furnish, install and provide 24-hour maintanence of two seperated systems, including mounting poles, electrical, internet and Monthly Management or is there 1 complete system with 1 back-up camera. 2. Please clarify "life of the project" with an additional 60 days as it relates to maintaning images. Milestone 1, 2 or substaintial completion? 3. Please clarify who is responsible for the monthly Managed Monthly Service cost associated. 4. Does the Authority require Certified Installation by the manufacturer? 5. Will the system be mounted to an existing facility or pole?	1) Per SC-19.1G, the CONTRACTOR is told the two locations to initially locate the two cameras, and told that they will be moved up to three times; 2) Final Completion; 3) CONTRACTOR is responsible for service cost; 4) No specific certification requirement, but required to comply with SC-19; 5) Per SC-19.1H, CONTRACTOR is to propose location and mounting details meeting the other requirements of SC-19.

IFB 7-1904 - OC Streetcar Construction Project
Questions Received

Submitted No.	Reference Document(s)				Questions	Response
	Exhibit / Attachment / Spec Section	**Drawing/ Attachment**	**Page Number(s)**	**Paragraph (s)**		
251	Special Conditions 4.3.1				The maximum time for Milestone 1 is 600 calendar days. We believe this time is inadequate given the scope of work and restrictions. Bidders will need to include premium time, liquidated damages, and/or excessive contingencies in their pricing if the milestone is not extended. Our concerns are as follows: 1) Milestone 1 includes completion of the MSF facility. The site is currently occupied and all buildings, debris and other material left behind by the previous tenant will need to be investigated, tested, remediated and removed before construction can begin. It is currently unknown who will perform this work. Phase II of the Site Investigation Report indicates the existing soil is impacted with VOC and Lead and that it will require remediation. 2) Milestone 1 includes completion of the MSF facility (both building/specialty equipment, and surrounding yard, track, and systems). Experience has shown construction of a maintenance facility like this will take roughly 24 months. 3) Milestone 1 includes the completion of Retaining Walls 144/544 and 153/553 which require 8 month and 6 month settlement periods before construction of railroad tracks can commence. Multiple headings will be needed at the start of the project to build both walls concurrently in order to commence the settlement period. This will add expenses for premium labor and logistics for the Santa Ana River bridge construction, which will start after the Retaining Wall construction because of the seasonal work restrictions within the river. 4) Milestone 1 requires completion of traction power, overhead catenary, train signals, automatic crossing gates, including all static, dynamic, and integrated testing as well as O&M manuals/training.For the reasons stated above, please extend Milestone 1 by 175 days.	To be answered in a future Addendum.

IFB 7-1904 - OC Streetcar Construction Project
Questions Received

Submitted No.	Reference Document(s)				Questions	Response
	Exhibit / Attachment / Spec Section	**Drawing/ Attachment**	**Page Number(s)**	**Paragraph (s)**		
252	Special Conditions 4.3.1				Milestone 1 extends from 116+00 to 196+67. On the west side of Milestone 1, OCS Wire Runs WBT2 and EBT2 will need to be complete to operate streetcar vehicles for post delivery vehicle acceptance testing. For these OCS Wire runs to be complete, they need to either (1) be installed to the down-guy at 104+50 which will require completion of the Westminster Bridge or (2) OCS Wire Runs WBT2 and EBT2 will need to be temporary sectionalized, which will add expense for temporary down guys/splicing/etc and will require de-energizing them during streetcar testing when the Westminster Bridge and all other work west of 116+00 is complete and the remainder of WBT2 and EBT2 can be installed. Please consider moving Milestone 1 700 feet east to 123+00 to avoid this conflict with OCS Wire Runs WBT2 and EBT2.	To be answered in a future Addendum.

IFB 7-1904 - OC Streetcar Construction Project
Questions Received

Submitted No.	Reference Document(s)				Questions	Response
	Exhibit / Attachment / Spec Section	**Drawing/ Attachment**	**Page Number(s)**	**Paragraph (s)**		
253	Special Conditions 4.3.2				The maximum time for Milestone 2 is 730 calendar days. We believe this time is inadequate given the sequencing restrictions and scope of work. Bidders will need to include premium time, liquidated damages and excessive contingencies in their pricing if this milestone is not extended. Our concerns are as follows: 1) Weekend closures of major intersections is not allowed per the response to Question 47. Performing the intersection closures at night, instead of weekends, will add a significant amount of time to the schedule. 2) Work sequencing restrictions will significantly impact progress on the project; for example: a) Special Conditions 6.3.4 restricts Segment 2 construction to one subsegment at a time and Addendum 5 has broken this one mile long corridor into four subsegments. b) Special Condition 6.3.6 states that the contractor shall not have any construction in progress or temporary traffic control in place for the holiday moratoriums and other events on 4th Street, and this work is divided into multiple subsegments. 3) Milestone 2 requires completion of traction power, overhead catenary, train signals, static testing, dynamic testing and training. In addition, please confirm the following: A) Please confirm that Segments 2, 3, 4 and 5 can proceed concurrently provided that satisfactory progress is maintained in the preceding stages of construction. B) Multiple headings will be needed to complete the utility relocations required for Milestone 2. Please confirm that multiple shifts (day and night) will be allowed for utility relocation work. C) Work windows for utility relocation work by others is outlined in Special Conditions 6.6.3.1 - 6.6.3.3. Please confirm that bidders can work concurrently in these windows. Also, please provide the referenced exhibits for their work. D) In regards to the response to Question 47, please confirm that night work includes the hours from 10PM to 12AM on Sundays. For the reasons stated above, we believe that Milestone 2 needs to be extended by 175 days.	To be answered in a future Addendum.
254	Special Conditions 4.3.2				Will additional time for Milestones 1 and 2 be granted if Optional Bid Items 11-14 are exercised, provided the work is on the critical path?	To be answered in a future Addendum.
255	Special Conditions 6.3.4				Special Conditions 6.3.4 restricts Segment 2 construction to one subsegment at a time and Addendum 5 has broken this one mile long corridor into four subsegments. Please consider allowing concurrent work in Segment 2 subsegments or changing Segment 2 back to two subsegments.	To be answered in a future Addendum.

IFB 7-1904 - OC Streetcar Construction Project
Questions Received

Submitted No.	Reference Document(s)				Questions	Response
	Exhibit / Attachment / Spec Section	**Drawing/ Attachment**	**Page Number(s)**	**Paragraph (s)**		
256	Special Conditions 6.3.6				Special Condition 6.3.6 states that the contractor shall not have any construction in progress or temporary traffic control in place for the holiday moratoriums and other events on 4th Street. Please consider adding allowing 4th Street to be constructed as a single subsegment.	To be answered in a future Addendum.
257	32 12 16				Specification 32 12 16 - 3.02B states that successive courses of asphalt can not be laid upon previously laid courses until 24 hours after the previous course was laid. This will add a significant amount of cost and time to the paving work. Please consider revising this requirement to be consistent with industry practice outlined in Caltrans Specifications and SSPWC.	To be answered in a future Addendum.
258	Special Conditions 5				Liquidated Damages are $60,000 per calendar day for Contract Completion and $60,000 per calendar day for Interim Milestones. Liquidated Damages are also cumulative when the time periods overlap. The amounts are inconsistent with other transit agencies. We feel they are also excessive. Please consider reducing these liquidated damages to $2500 per calendar day.	To be answered in a future Addendum.
259					Reference Plan Sheet Z-CN13. Masonry Wall, Thickness confirmation: Detail 'OCS Poles at CMU Wall Detail' indicates a 1'-0" thick wall whereas 'Typical Section (H=8')' indicates 8" CMU, please confirm thickness of the wall.	To be answered in a future Addendum.
260					Reference Plan Sheet Z-CN13. Masonry Wall, Height confirmation: Detail 'Elevation' indicates a 5'-0" high wall where as 'Typical Section (H=8')' indicates 8' High CMU wall, please confirm the height of the wall.	To be answered in a future Addendum.
261					Reference Plan Sheet Z-DN-12. Please confirm the spacing of the Truck support detail indicated on Z-DN12 and detail 06 / Z-DD18.	To be answered in a future Addendum.
262					Reference Plan Sheet Z-DS11. Elevation Detail 07 / Z-DS-11; the Bracing above the roof line (Detail 10 / ZZ-DD37) indicates typical, is this typical for each bay in between the HSS 14 x 14 Columns?	To be answered in a future Addendum.
263					Reference Plan Sheet Z-PN11. CMU Shaft at the elevator at grid lines 2 & A; indicates D2 wall type, should this be labeled as a D3 Wall type instead?	To be answered in a future Addendum.
264					Reference Plan Sheet Z-PN41. The elevations 1 /Z-PS31 & 4/Z-PS31 are labeled in reverse, meaning North is actually south and vice versa.	To be answered in a future Addendum.

IFB 7-1904 - OC Streetcar Construction Project
Questions Received

Submitted No.	Reference Document(s)				Questions	Response
	Exhibit / Attachment / Spec Section	Drawing/ Attachment	Page Number(s)	Paragraph (s)		
265					Reference Plan Sheet Z-BN32. Adjacent to Grid lines 5.6 and A there is an indication of a light fixture 'L9', L9 does not show up on the fixture schedule.	To be answered in a future Addendum.
266					Special Permits for traffic control required by the contract for weekend and night work. We are interested each cities' required processes, fees, and constraints for these permits.	Bidders are directed to SC1.3, SC1.4, SC6, Volume 2 Traffic Control and Construction Staging Plans, and Exhibit I, Traffic Management Plan. Traffic control permits must be obtained from the Cities. There will be no fees for City Permits for this Project.
267					Permit for potentially setting up a construction trailer within the OCTA PE ROW. We are interested in finding out what kind of permit, if any, is required and what process, fees, constraints will be asked of the Contractor.	Per SC7.2, the City of Santa Ana requires a permit for temporary buildings. There will be no fees for City Permits for this Project.
268					Do you have a contact within the City of Garden Grove and City of Santa Ana who are familiar with this project and can provide this information or are you able to provide additional information?	This project has been developed in partnership with the Cities of Santa Ana and Garden Grove. Agreements are in place, and OCTA coordinates closely with the Cities.
269					The legend on Plan Sheet FG01, page no. 440, identifies 1) road construction and 2) rail placement/track slab placement as "(long term)". What is meant by "long term" and how is it different from the other work items listed in the legend such as concrete work, mill and overlay, and work area which are not identified as "long term"?	To be answered in a future Addendum.
270					Plan sheets FG02-FG05 include a note for all segments that states "traffic control plans show all trackwork and full depth pavement construction. All other ancillary work shall be constructed in accordance with civil plans using W.A.T.C.H. Manual application." The traffic control plans also identify concrete work, mill and overlay work, and work areas. 1) Please confirm that these items are not considered ancillary work. 2) Will electrical, communication, and OCS work be considered ancillary work? 3) Please further define what is considered "ancillary work".	To be answered in a future Addendum.

IFB 7-1904 - OC Streetcar Construction Project
Questions Received

Submitted No.	Reference Document(s)				Questions	Response
	Exhibit / Attachment / Spec Section	Drawing/ Attachment	Page Number(s)	Paragraph (s)		
271					SC-6.3.3, 6.3.4, 6.3.5, 6.3.6, and 6.3.7 state that "Closures will only be allowed during the time the intersection is an active construction zone." SC-6.3.6, 18th bullet point, alludes to an active construction zone as being defined as 3 days or less of inactivity. Please confirm or define what is meant by "active construction zone".	The intent of this requirement is to minimize unnecessary disruptions to the traveling public. There has to be valid justification for maintaining closures in compliance with the hours allowed for the particular work activity (i.e. night work) and in compliance with the City's Traffic Control Permit.
272					It is unclear what the intended order of work and construction sequencing is for this project particularly as one segment's order of work relates to the other segments' order of work. There are several places where the Special Conditions reference that the Contractor cannot deviate from the specified order of Work or sequencing. In order to better understand the Authority's requirements, we request that the Authority provide the sequence of work that was used for 1) the design of the traffic handling and detour plans 2) determining the contractual milestone timeframes 3) determining what work will be constructed under the W.A.T.C.H. Manual and when that work would occur.	To be answered in a future Addendum.
273					SC-1.4 states "Any deviations from, or modifications to the TC Plans…shall be at the expense of the CONTRACTOR. The cost of any additional traffic management and control measures and detours not indicated are considered to be incidental to the performance of the items of Work and no additional compensation will be made for such traffic management and control measures and detours." Please confirm that the costs referenced above are only applicable for changes requested for the Contractor's convenience and not for public convenience enhancements Required by public Agencies or changes due to deficient TC Plans and Detour Plans.	Changes requested for the Contractor's convenience shall be at the expense of the CONTRACTOR. With regards to public convenience, bidder's attention is pointed to Bid Item 33 and SC-53.4B.33 that describes an allowance item to be used for traffic control and related Work that is not shown in the contract documents but is determined to be needed. SC-1.4 will be revised in a future addendum to be consistent with Bid Item 33 and SC-53.4B.33.
274					Addendum #3 has revised the bid date from March 5, 2018 to April 27, 2018. Based on the pre-bid meeting, the anticipated award date is May 14, 2018. Does the Authority expect the anticipated award date to be revised?	See response to bidder question 23, which provides a revised anticipated award date of June 25, 2018.

IFB 7-1904 - OC Streetcar Construction Project
Questions Received

Submitted No.	Reference Document(s)				Questions	Response
	Exhibit / Attachment / Spec Section	Drawing/ Attachment	Page Number(s)	Paragraph (s)		
275					SC-6.8.1 TCE-1-OCFCD states that the Contractor is responsible for replacing, repairing, restoring, or removing Contractor improvements that have been damaged by OCFCD. Please provide OCFCD's plans, scope, and schedule for all operating, maintaining, repairing, improving, restoring, or enlarging of OCFCD'S improvements within, upon, over, or under OCFCD's ROW so that all bidders can reasonably estimate this scope of work.	Addendum No. 7 includes a revision in SC-6.8 to reflect that OCFCD will be providing an Encroachment Permit rather than a Temporary Construction Easement. OCFCD does not have capital improvements planned in this segment of the Santa Ana River. OCFCD does have maintenance trucks regularly passing through the project area, and at any time could have releases from dams upstream. This is standard OCFCD language.
276					Reference Special Conditions, Section SC-14 – Hazardous Materials, Pages 62 thru 65 of 157. "…During the performance of earthwork activities…the contractor shall anticipate to encounter lead, arsenic and Total Petroleum Hydrocarbon impacted soils…" Elsewhere in this section "…Contractor shall anticipate encountering buried railroad timber structures, old timber pilings and old railroad ties … this wood has been treated with chemicals that are hazardous to human health and shall be regarded as hazardous Treated Wood Waste (TWW)." Will the contractor be paid as extra work for the removal and disposal of these Hazardous Materials? Or, will the removal and disposal of Haz Material be paid under bid items 13 thru 15?	See reponse to bidders questions nos. 54 and 58. Removal and disposal of Hazardous Materials from the PE ROW or Public ROW, including Treated Wood Waste, will be paid for under Bid Item 15.
277					The description contained in SC-53.4 Item Measurement and Payment for Bid Item 48 b. appears to be the same as 49 b. Bid item 48 is for Traction Power Substation and 49 is for Furnish and Install OCS. Please review and confirm or revise.	To be answered in a future Addendum.
278					Reference Sound Wall 1 General Plan Sheet NN12; and Caltrans Standard Drawing B15-3 & B15-5. Are the Sound Wall CIDH Pile lengths supposed to be per Case 1 or Case 2 of the Caltrans Standard Plans?	To be answered in a future Addendum.

IFB 7-1904 - OC Streetcar Construction Project
Questions Received

Submitted No.	Reference Document(s)				Questions	Response
	Exhibit / Attachment / Spec Section	Drawing/ Attachment	Page Number(s)	Paragraph (s)		
279					Reference 8.2 AUTHORITY-Furnished Materials. What is the Authority's expectation from the Contractor for supporting the delivery, storage, installation, testing, and implementation of the Ticket Vending Machines & Streetcar Vehicles?	With regards to the Ticket Vending Machines, please see response to bidder's question 220. With regards to the CONTRACTOR's role in Integrated or Dynamic Testing with the Streetcar Vehicles, please see SC-28 and Exhibit P.
280					Reference Bid Item 13, 14, & 15; Technical Specifications 31 23 33, 3.02 E. Exhibit N Environmental Site Assessment Reports makes the recommendation that some soil could be used in industrial or commercial fill, but it offers no definition of what soil will be considered contaminated. What definition for Contaminated Soil is the Authority using for this contract? Is there a legal definition or testing limit thresholds that can be applied to differentiate what will be paid under the Contaminated Soil bid items?	Per GC-9 and SC-14, the CONTRACTOR shall comply with current California Health and Safety Code , current California Department of Toxic Substances Control, and all current local, State and Federal laws.
281					Reference Technical Specifications 31 23 33, 3.01(A); General Conditions 67.2; California Government Code 4216.7(c). TS 31 23 33, 3.01(A),"Contractor's attention is directed to possible existence of pipe and other underground improvements which may or may not be shown on Plans. Preserve and protect any such improvements whether shown or not. Where necessary to remove and replace or to relocate such improvements to prosecute Work, improvements shall be removed, maintained, and permanently replaced by Contractor at their expense, except as otherwise provided in Contract Documents." This Technical Specification conflicts with GC 67.2, Notice of Differing Conditions, which allows the authority to issue a change order for "subsurface or latent physical conditions at the site differing materially from those indicated in the Contract, or unknown physical conditions at the site." It also conflicts with California Government Code 4216.7(c), which assigns costs from a utility damaged by excavation to the utility owner if the Excavator follows Dig Alert required protocol and the utility owner fails to mark their lines. Please clarify the meaning of TS 31 23 33, 3.01(A), or modify it so that it does not conflict with General conditions and the California Government Code.	To be answered in a future Addendum.

IFB 7-1904 - OC Streetcar Construction Project
Questions Received

Submitted No.	Reference Document(s)				Questions	Response
	Exhibit / Attachment / Spec Section	Drawing/ Attachment	Page Number(s)	Paragraph (s)		
282					OCTA's instructions to bidders, special conditions and technical specifications do not clearly define prequalified subcontract scopes of the "5 specialty work areas". Please confirm that the prequalification applies to general work descriptions and not to specific bid items and/or technical specification sections. For instance, the Santa Ana and Westminster Bridges require bridge construction prequalification. But these bridges will require utilization of subcontractors for precast girders, reinforcing steel, post-tensioning, and railings. Please confirm that other, non-prequalified subcontractors will be allowed to perform supporting and/or overlapping work related to the specialty work areas that require prequalification?	Prequalification applies to general work descriptions and the use of subcontractors for supporting or overlapping work will be allowed.
283					Exhibit A-1 under Bid Item #30 "Roadway Construction" states that it will include all work associated with roadway improvements and preparation of the existing pavement surface to include milling and grinding in preparation of overlay, providing, placement and compaction including testing services for asphalt overlay as indicated on the plans/specification. This section also states that the item work excludes work covered by other Bid Items. However, Bid Item #32 "Mill & Overlay" states that "the work of this item includes for preparation of the existing pavement surface to include milling and grinding in preparation of overlay, providing, placement and compaction including testing services for asphalt overlay". This bid item also excludes Work covered by other bid items, including Bid Item 30 Roadway Construction. These two Bid Item sections contradict each other by both excluding the same type of work described in other bid items, and both these sections both describe the same scope for preparing, grinding, overlay, testing and compaction. Please clarify which item will cover the scope for the aforementioned Mill & Overlay work?	To be answered in a future Addendum.

IFB 7-1904 - OC Streetcar Construction Project
Questions Received

Submitted No.	Reference Document(s)				Questions	Response
	Exhibit / Attachment / Spec Section	**Drawing/ Attachment**	**Page Number(s)**	**Paragraph (s)**		
284	Addendum #6, dated 02/23/2018 Item 4 – Revisions to Exhibit A – General Conditions GC 37.9 and GC 47.2				The referenced addendum item provided replacements for pages 37 and 51 of the General Conditions, however, the revised pages are applicable to the original General Conditions issued with the RFP and not the revised General Conditions issued with Addendum #1. As such the pages do not match up. Please reissue the replacement pages based on the revised General Conditions issued with Addendum #1.	The replacement pages are being reissued with Addendum No. 7.
285	Book 1B	27 01 60		2.01	SIL-2 certification. OS for servers and workstations are specified as Windows. Please confirm SIL-2 certification applies to the OS only.	To be answered in a future Addendum.
286	Book 1B	27 01 60		2.02.A	Specifies TransitVUE software for the VMS subsystem and Harman software for the PA subsystem, with no "or approved equal". Contractor requests adding "or approved equal".	To be answered in a future Addendum.
287	Book 1B	27 01 60		2.02.J	Are there any specifications/criteria for the Microwave link between MSF abd Garden Grove? Have any engineering studies been done on the link path? Any information on tower height, equipment, etc?	To be answered in a future Addendum.
288	Book 1B	27 01 60		2.03.A.3	Please confirm the qty three (3) Pivot 3 vSTAC Watch 160 R3 and qty nine (9) Pivot 3 vSTAC Data 160 R3 servers are correct and will fit in the rack space identified on Drawing U-COMN11.	To be answered in a future Addendum.
289	Book 1B	27 01 60		2.03.A.4	Please expand the description on the Contractor's scope to integrate existing OCTA ITMS servers to the streetcar network.	To be answered in a future Addendum.
290	Book 1B	27 01 60		2.04.G	Please confirm the Network Time Server is existing/by others.	To be answered in a future Addendum.
291	Book 1B	27 01 60		2.04.H	Specifies the Contractor provides 3 racks at MSF, 2 racks at Garden Grove. Drawing U-COMN18 shows 2 racks at MSF. Is the third rack at MSF a spare?	To be answered in a future Addendum.
292	Book 1B	27 01 60		4.02.B	Please confirm that this report/certification is not required for software specified in Part 2 OCC System Requirements of this Specification Section.	To be answered in a future Addendum.
293	Book 1B	27 05 16		1.01	Please confirm the Contractor will develop a spare parts list for OCTA approval, and allocate 15% of the actual communications equipment cost per the bid proposal to spare parts budget.	Confirmed.
294		U-COMN27			Drawing U-COMN27 seems to indicate a 48 fiber SM backbone cable in/out of the CIC FDP. Drawing U-COMN23 and U-COMN05-07 indicate the 48 fiber backbone cable is spliced in an adjacent manhole, with 12-fiber laterals in/out of the CIC.	To be answered in a future Addendum.

IFB 7-1904 - OC Streetcar Construction Project
Questions Received

Submitted No.	Reference Document(s)				Questions	Response
	Exhibit / Attachment / Spec Section	**Drawing/ Attachment**	**Page Number(s)**	**Paragraph (s)**		
295	Book 1B	27 05 56		1.07.C	Note 1 of the table. Unclear how the traffic signal system is part of the CTS system?	To be answered in a future Addendum.
296	Book 1B	27 51 16			Confirm audio coverage criteria is limited to under-canopy areas of the platform.	To be answered in a future Addendum.
297	Book 1B	27 51 16		2.01.A.7&8	Confirm specified UPS's are adequately sized for the anticipated loads as wel as 50% future loads.	To be answered in a future Addendum.
298	Book 1B	28 41 29		2.02.G	Please confirm 1500TB total storage capacity at Garden Grove, and please clarify 2.01.C.2 language regarding video storage at Garden Grove.	To be answered in a future Addendum.
299					On 808 details 6 and 7 you show a haunched connection point for the runway. On 931 the cranes are drawn as underhung, rather than top rider as specified in the specs. Also, there is no wall to attach one side of each runway to. Are we to come up with a structure? Is there something I have overlooked?	To be answered in a future Addendum.
300		U-DBN01, U-DBN02 and U-DBD02			Drawing U-DBN01 Note 4 call out is for system ductbank under walkway. See U-DBD02 for details. Drawing U-DBN02 Note 3 calls out for system ductbank installed under bridge walkway. See U-DBD02 detail A. Drawing U-DBD02 detail A is for Bridge and Walkway Ductbank. What material/schedule is the conduit on U-DBD02 detail A?	To be answered in a future Addendum.
301		U-DBN10, U-DBN11, U-DBD01 and U-DBD02			Drawings U-DBN10 and U-DBN11 show a GRS ductbank beneath the walkway lids from PB-14 to PB-15. Which ductbank cross section detail applies to this run, U-DBD01 detail E or U-DBD02 detail A? Is the intent to have six individual two inch un-encased conduits underneath the walkway lids? If U-DBD02 detail A, are the spacers plastic or a unistrut type spacer? How are the spacers connected to the concrete?	To be answered in a future Addendum.
302		U-DBD01			Drawing UDBD01 shows detail E for bridge ductbank. Where does this detail apply? Please confirm that UDB01 detail is meant to be un-reinforced concrete encased.	To be answered in a future Addendum.

IFB 7-1904 - OC Streetcar Construction Project
Questions Received

Submitted No.	Reference Document(s)				Questions	Response
	Exhibit / Attachment / Spec Section	**Drawing/ Attachment**	**Page Number(s)**	**Paragraph (s)**		
303	34 10 40	TD05			Spec section 34 10 40 - 1.01.A states that the Ductbank/Walkway Precast Concrete Panels are to be installed on the Santa Ana River Bridge and Westminster Bridge Structures. Please confirm that 34 10 40 also applies to the precast concrete panel for the DF track area as shown on drawing TD05 detail 8.	To be answered in a future Addendum.
304	34 10 40	DN19			Drawing DN19 detail 2 and spec section 34 10 40 - 2.02.1 both show that the walkway precast lids are limited to 75 lbs per piece using normal concrete weight. While scaling the width at 2'-6" and the thickness of the lid at 2", to get to 75 lbs the precast lid can only be about 1'-2" long. Please confirm that the agency is wanting these precast walkway lids at just over 1' long for the length of the walkway.	To be answered in a future Addendum.
305	32 12 33, 32 12 16, & 34 11 93				Spec section 32 12 33, added by Addm 6, was provided as a spec for the fabric to be used between the ballast and AC paving in the MSF yard. This is a spec for peel & stick AC crack and joint repair/reinforcing fabric. The spec includes a requirement for a 25Kn mat; believe this should read 25Kn/m. We believe this specification has been provided in error, as it is not the proper product to be used between the ballast and AC paving. This peel & stick product is only available in 12" to 36" widths and it would be a mess trying to stick it down to the ballast. We believe the product should be something with a high melting point, available in wide widths, that will easily create separation and a surface on the ballast to facilitate AC paving. If reinforcement is required, an initial layer of AC should be layed prior to mat or grid placement. Please confirm that peel & stick is really what you want or specify a different product.	To be answered in a future Addendum.
306	34 23 13				Spec section 34 23 13 - 2.02.N.1 and.2 state that 1) OCS poles shall not be painted unless so required by the Engineer and 2) where required by the Engineer, poles shall be painted with anti-graffiti paint finish. Please confirm that OCS poles are not painted and also do not require anti-graffiti coating.	To be answered in a future Addendum.

IFB 7-1904 - OC Streetcar Construction Project
Questions Received

Submitted No.	Reference Document(s)				Questions	Response
	Exhibit / Attachment / Spec Section	**Drawing/ Attachment**	**Page Number(s)**	**Paragraph (s)**		
307		ZDD13			Sheet ZDD13 is entitled Typical Concrete Details, and detail 1 on this sheet is for edge guard (angle iron armor at slab edges). We don't find this detail referenced, except at the folding door trench drains and turntable pits; we don't see this angle armor called out at the wheel truing pit, nor at the main pit. Please confirm that the 1/ZDD13 detail is required only at the folding door trench drains and turntable pits.	To be answered in a future Addendum.
308		ZDN14, ZDD17			Detail 1/ZDN14 calls for stainless steel grating at the folding door trench drains, but the referenced cross sections (8 and 9/ZDD17) call for the grating to be fiberglass. Please clarify what type of grating is required at the folding door trench drains.	To be answered in a future Addendum.
309	34 72 00	CX01, CX02, DN12, NS01, et al.			Spec 34 72 00, section 3.17A states that "maintenance walkways shall be provided . . .in accordance with . . CPUC General Order No. 118-A"; however, the thickness and limits of walkway ballast is not shown in the track cross sections. Please provide details for the required CPUC walkways (concrete/walkway ballast).	To be answered in a future Addendum.
310		Traction Power Dwgs			Traction Power Drawings show SCE Disconnect Switches sitting on concrete slabs. Traction Power drawing U-TPN60 shows a detail for SCE Disconnect Switch Foundation Plan with callouts for detail C, G and F. Drawing U-TPN61 detail C and G both look to be for a cast-in-place foundation while detail F looks to be for a pre-cast box. Please confirm that detail C and G on U-TPN61 do not apply to the Disconnect Switch detail and that the Disconnect Switches sit on precast vaults as shown in SCE Underground Structure Standard SS 590.	To be answered in a future Addendum.
311					Please confirm that there are no grounding or corrosion control requirements for retaining walls or the railing sitting on top of the retaining walls	To be answered in a future Addendum.
312					Reference Technical Specification Section 051215-ARCHITECTURALLY EXPOSED STRUCTURAL STEEL FRAMING for the MSF. We are unable to find an indication on the drawings on the intent where this occurs. Please provide drawing sheet numbers where this work occurs.	To be answered in a future Addendum.

IFB 7-1904 - OC Streetcar Construction Project
Questions Received

Submitted No.	Reference Document(s)				Questions	Response
	Exhibit / Attachment / Spec Section	**Drawing/ Attachment**	**Page Number(s)**	**Paragraph (s)**		
313					On sheet Z-PD22 we have conflicting details on the EPDM Roofing system: Detail 01 indicates EPDM Membrane on Rigid Insulation whereas Details 02 & 03 indicate EPDM membrane on Protection Board and Rigid insulation, please clarify which set of detail(s) are correct and apply.	To be answered in a future Addendum.
314					01 / Z-PD06 Indicates a Solid Countertop and 4” Backsplash on typical casework, whereas the specification 064000 calls for a Plastic Laminate countertop, please clarify which applies. If it is the solid countertop, please provide an acceptable specification.	To be answered in a future Addendum.

37.5 All Work, whether performed by the CONTRACTOR, or its Subcontractors of all tiers or anyone directly or indirectly employed by any of them, and all equipment, machinery, materials, tools and like items incorporated or used in the Work, shall be in compliance with and conform to all applicable laws, ordinances, rules, regulations, standards and orders of any public, quasi-public, or other authority relating to the safety of persons and their protection against injury, specifically including, but in no event limited to, the Federal Occupational Safety and Health Act of 1970 and the California Code of Regulations (CCR) Title 8 Standards, as amended, and all rules and regulations now or hereafter in effect pursuant to said Act; and CONTRACTOR shall provide, or cause to be provided, each worker on the Project Site the proper safety equipment for the duties performed by that worker and will not permit any worker on the Project Site who fails or refuses to use the same. The AUTHORITY shall have the right, but not the obligation, to order CONTRACTOR to send a worker off the Project Site for the day or to discharge a worker for his or her failure to comply with safety practices.

37.6 The CONTRACTOR shall, throughout the performance of the Work, maintain adequate and continuous protection of all Work and temporary facilities against loss or damage from whatever cause. The CONTRACTOR shall protect the property of the AUTHORITY and third parties from loss or damage from whatever cause arising out of the performance of Work and shall comply with the requirements of the AUTHORITY, its insurance carriers and with all applicable laws, codes, rules and regulations with respect to the prevention of loss or damage to property as a result of fire or other hazards to:

- Employees on the Work and other persons who may be affected thereby;
- The Work and materials and equipment to be incorporated therein, whether in storage on or off the Site, under care, custody or control of the CONTRACTOR or the CONTRACTOR's Subcontractors or Sub-subcontractors; and
- Other property at the Site or adjacent thereto, such as trees, shrubs, lawns, walks, pavements, roadways, structures and utilities not designated for removal, relocation or replacement in the course of construction.
- Solvents, oils and any other substance, which may be harmful to plant life, shall be disposed of in containers and removed from the Site. At completion of the Work, any contaminated soil shall be removed and replaced with soil of equal quality prior to contamination by the CONTRACTOR at no increase in the Contract Price.

37.7 The AUTHORITY may, make periodic patrols of the Project Site as a part of its normal security and safety program. The CONTRACTOR shall not be relieved of its aforesaid responsibilities and the AUTHORITY shall not assume same, nor shall it be deemed to have assumed, any responsibility otherwise imposed upon the CONTRACTOR, as a result of safety patrols by the AUTHORITY.

The AUTHORITY may audit the CONTRACTOR's safety program for health, safety and environmental compliance at various intervals of the project, at the sole discretion of the AUTHORITY. Elements may include but, are not limited to; OSHA injury & illness records and logs, Job Safety Analysis and safety plans, equipment operator licenses and training records, incident reports, meeting minutes, engineered plans, safety meeting records, crane and rigging plans, equipment inspection records, qualifications of and interviews with key CONTRACTOR management personnel, and similar information. The CONTRACTOR shall support and cooperate with these audits at no additional compensation or schedule impacts with this contract.

37.8 The CONTRACTOR shall be responsible for the payment of all fines levied against the AUTHORITY for safety violations arising from or related to activities over which CONTRACTOR has responsibility under Contract Documents.

37.9 The CONTRACTOR shall give notice in writing, at least ~~forty-eight (48) hours~~14 calendar days before breaking ground in any subsegment, to ~~all persons having interests on or near the Site, Public Utility Companies, owners of property having structures or improvements in proximity to the Site of the Work, Superintendents, Inspectors, or those otherwise in charge of property, streets, water pipes, gas pipes, sewer pipes, telephone cables, electric cables,~~

~~railroads or otherwise who may be affected by the CONTRACTOR's operation, in order that they may remove any obstruction for which they are responsible and have a representative on Site to see that their property is properly protected~~the ENGINEER. Such notice does not relieve the CONTRACTOR of responsibility for any damages, claims, and defense of all actions against the AUTHORITY resulting from performance of such Work.

37.10 The CONTRACTOR shall erect and maintain reasonable safeguards for safety and protection, including posting danger signs and other warnings against hazards, promulgating safety regulations and notifying owners and users of adjacent Sites and utilities.

37.11 Use or storage of explosives is prohibited.

37.12 The CONTRACTOR shall designate a competent person for each task, as required by Cal-OSHA standards or laws. The task competent person shall be approved by the AUTHORITY, to be responsible for the prevention of incidents. If the AUTHORITY or any public agency with jurisdiction notifies the CONTRACTOR of any claimed dangerous condition at the Site that is within the CONTRACTOR's care, custody or control, the CONTRACTOR shall take immediate action to rectify the condition at no additional cost to the AUTHORITY. The CONTRACTOR shall be responsible for the payment of all fines levied against the AUTHORITY for deficiencies relating to the CONTRACTOR's supervision or conduct and /or control of the Work.

37.13 The CONTRACTOR shall not load or permit any part of the construction or Site to be loaded so as to endanger safety of persons or property.

37.14 The CONTRACTOR shall not permit open fires on the Project Site.

37.15 No later than seven (7) calendar days prior to the arrival of a crane, the CONTRACTOR must provide the most recent annual and quadrennial certificates. The CONTRACTOR must also provide crane operator certificates from the National Commission for the Certifying of Crane Operators (NCCCO), as outlined in CIIPP, no later than seven (7) calendar days prior to a crane operator working on site.

A rigging plan is required for all lifts. The rigging plan shall be submitted no later than fourteen (14) calendar days prior to the scheduled crane activity.

Critical lifts require an engineered plan designed by a registered professional engineer licensed in California. A critical lift includes, but is not limited to:

- Any lift location that could result in the boom or load falling into a hazardous area in the event of a mishap, including energized electrical wiring and equipment, gas manifolds, and operating machinery,
- Lifts equal to or greater than 10 tons,
- Lifts equal to or greater than 75% of rated capacity,
- Lifts over occupied buildings, railways or public roadways,
- The use of multiple cranes for one lift, and/or
- Lift and transit of load greater than 75% of rated capacity of track crawler crane.

Pick and carry with rubber tired cranes is forbidden on AUTHORITY projects.

Tandem lifts (two or more cranes) shall require a California registered professional engineer stamped lift plan from the crane company, a detailed written job safety analysis, and a lift plan review meeting that includes the AUTHORITY's Engineer, and the AUTHORITY's HSEC. Written plans and review meetings shall be completed a minimum of fourteen (14) calendar days in advance of the scheduled task operation.

37.16 A **Job Safety Analysis** (JSA) shall be forwarded to the AUTHORITY no later than seven (7) calendar days prior to any new operation being performed.

47.2 Quality Control Manager, QC Personnel and Laboratories

The CQCP shall include the name and qualifications of a Contractor Quality Control Manager ("CQCM"). The CQCM shall be responsible for the administration of the CQCP, including compliance with the CQCP and CQCP modifications.

The CQCM shall meet the following minimum requirements:

1) Be a graduate engineer, or a graduate construction manager with a bachelor's degree in engineering or construction management from an accredited college or university, with a minimum of five (5) years construction experience on construction projects similar to the work of this contract and a minimum of three (3) years experience as a construction quality control manager and shall be employed by the CONTRACTOR, or

2) Have ten (10) years construction experience on construction projects similar to the work of this contract, and a minimum of six (6) years experience as a construction quality control manager, and shall be employed by the CONTRACTOR.

The CQCM shall be assigned as the Manager of the Program but may also perform project quality control duties. An alternate for the CQCM shall be identified in the plan to serve in the event of the CQCM's absence. The education and experience requirements for the alternate shall be the same as for the designated CQCM.

The CQCM shall be responsible to the CONTRACTOR, shall have the authority to make decisions concerning quality of the work or product, shall have the authority to reject work as defective or non- compliant, shall have the authority to require removal and correction of defective or non-compliant work, and the CQCM or the approved alternate CQCM shall be at the project site during performance of all work requiring inspection or testing. The CQCM cannot be the project manager, superintendent, project engineer, a foreman, member of the production crew, nor have other "production" duties on the project. The CQCM must work directly for an officer or principal of the CONTRACTOR. The CONTRACTOR's project manager, superintendent, or other on-site staff member, shall not have authority over the CQCM. A letter prepared and signed by an officer of the CONTRACTOR, addressed to the CQCM, which describes the CQCM's responsibilities and authority consistent with the requirements of these specifications shall be included with the CQCP. The CQCM may be employed by a subcontractor.

The CONTRACTOR shall provide qualified Contractor Quality Control staff to perform inspections and oversee testing under the CQCP. The minimum qualifications for the position of Quality Control Inspector are as follows:

a) Inspection and test personnel shall be trained and qualified in their respective areas of responsibility. CONTRACTOR shall verify appropriate certifications for each Quality Control Inspector as required by the Contract Documents, Government Codes and Standards, and Industry Standards. Certification records shall be maintained and available to the Authority upon request.

b) Concrete Inspectors shall hold a current ICC certification as a Reinforced Concrete Special Inspector.

c) Masonry Inspectors shall hold a current ICC certification as a Structural Masonry Inspector.

d) Electrical and mechanical inspectors shall have a minimum of five (5) years demonstrated experience in the inspection of electrical and/or mechanical work.

e) Structural Steel Inspectors shall hold a current ICC certification as a Structural Steel and Bolting Special Inspector- S1.

f) Welding Inspectors shall be an A.W.S. Certified Welding Inspector (CWI).

g) Four (4) years construction experience on similar projects or other relevant experience.

6.6.7 Payment

Compensation for furnishing all labor, materials, tools, equipment and incidentals and for doing all the work required to comply with section SC-6.6 Coordination with Utility Company Work and Work By Others shall be considered as included in the contract prices paid for the various items of work involved and no additional compensation shall be allowed therefor.

6.7 CONTRACTOR's Work Area

Reference is made to GC-34, CONTRACTOR's Work Area, of the General Conditions and areas designated as "CONTRACTOR Work Areas," if any, in the plans or elsewhere in the contract documents.

The CONTRACTOR shall be responsible for determining construction access and ingress/egress to its work areas and shall prepare an access and ingress/egress plan, signed by a professional Civil Engineer, registered in the State of California, depicting access and ingress/egress points and associated barricades, crash cushions, temporary railing, signs and other devices required to prevent accidents or damage or injury to the public, for review and approval by the Engineer.

Entry to or egress from these work areas shall be through the existing public right of way or other means in which the CONTRACTOR has legal access rights. The CONTRACTOR shall secure CONTRACTOR Work Areas from public access.

As a first order of Work following NTPC, CONTRACTOR shall carry out activities for locating all underground features within the Project area including pot holing for utilities.

The CONTRACTOR's attention is brought to the existence of basements within the Project area which are identified on the Contract Plans. CONTRACTOR shall use extra caution for removal of existing improvements and installation of new pavers in accordance with Technical Specification 32 14 00 Precast Concrete Unit Paving, concrete slabs, and/or other appurtenances in the vicinity of the existing basements.

The CONTRACTOR shall store construction materials in a way that does not impede and/or interfere with the use of OCFCD access roads, channel inspection, maintenance of the OCFCD facilities, and emergency vehicle access. The CONTRACTOR does have the option under this Contract to rent and use storage facilities off-site at the CONTRACTOR's sole expense.

The former Pacific-Electric (PE) right of way is available for use by the CONTRACTOR for rail welding, plant sites, material and equipment storage, staging and lay-down areas, and for other purposed uses as permitted by the Engineer. If the CONTRACTOR decides to utilize the PE right of way for permanent or temporary plant sites, preparatory work areas, staging areas or storage, then the CONTRACTOR shall provide a written occupancy plan to the Engineer for review and approval a minimum of fourteen (14) days in advance of the requested occupancy date in the right of way. The plan shall include a site layout and state the proposed use of the right of way, detail specific locations for rail string welding or other welding operations, show areas to be used for staging, lay-down and other preparatory work activities, specify locations of plant sites and material storage, detail fencing and safety measures, and include a restoration plan.

The CONTRACTOR is responsible for the final cleanup and restoration of the right-of-way. Any materials or equipment storage shall be performed in an orderly manner and in clean organized stock piles. The locations shall be such that they shall not preclude AUTHORITY or City vehicles from traversing the right of way and shall not impact the CONTRACTOR's performance of the Work. The CONTRACTOR shall not occupy the right of way until the occupancy plan is approved by the Engineer.

Full compensation for conforming to this provision, including placement of such protection devices required by the CONTRACTOR's access and ingress/egress plan and required to secure the area, shall be considered as included in the contract prices paid for the various items of work and no additional compensation will be allowed therefor.

6.8 Temporary Construction Easement and Encroachment Permit Areas

The location and use by the CONTRACTOR of the Temporary Construction Easements (TCEs) that have

been secured by the AUTHORITY for construction of the Project are identified and described in the table below and in the ROW Requirements Map included as Exhibit L to the Agreement. Additional information regarding the TCEs can be found in EXHIBITs L-1 through L-3.

Temporary Construction Easement and Encroachment Permit Areas

No.	Parcel No.	TCE/Encroachment Permit	Owner	Address
1	N/A	Encroachment Permi	Orange County Flo Control District	Santa Ana River
~~2~~	~~398-221-19~~		~~Nova Academy~~	~~500 W Santa Ana Blvd, San Ana, CA 92701~~
~~3~~2	101-681-22	TCE	76 Station	13960 Harbor Blvd, Gard Grove, CA 92843

When use of each TCE and Encroachment Permit Area is no longer required for construction, the CONTRACTOR shall promptly remove all equipment, and debris, including construction and stockpiled material, repair any damage to the property caused by the CONTRACTOR's operations, backfill and compact any excavations to a minimum of ninety percent (90%) relative compaction and leave the property in a neat, clean, and presentable condition in exactly the same configuration as it was when the CONTRACTOR began using the TCE/Encroachment Permit. The CONTRACTOR shall be responsible for obtaining from the Engineer written acceptance of the restored condition of the TCE/Encroachment Permit upon clearance of the area.

Reference is made to section SC-20, Pre-construction Surveys, for requirements related to documentation of the existing condition of TCE/Encroachment Permit areas.

Reference is made to section SC-21, Construction Activities on Temporary Construction Easements, for requirements related to construction activities occurring on private properties.

CONTRACTOR shall use reasonable efforts to prevent or minimize disruption to the property owner's and/or lessee's usage of the property during the term of the TCE/Encroachment Permit, including, without limitation, use of reasonable efforts to minimize interference with property owner's and/or lessee's, customer's and visitor's access to the property and interference with the business use on the property, if any. To the extent that any activity of the CONTRACTOR may block access or cause any other inconvenience to the property and interference with the business use on the property, the CONTRACTOR shall meet and coordinate such activity with the Engineer, AUTHORITY Public Outreach Manager, property owner and/or lessee prior to commencement of any such activity. CONTRACTOR shall include the AUTHORITY or AUTHORITY's designated representative in all such coordination activities.

If the CONTRACTOR disturbs existing soil or base material within the TCE/Encroachment Permit Area, it shall re-compact the soil or base material to the same condition as existed prior to the construction activities. CONTRACTOR shall perform a minimum of one in-situ compaction test for each 1,000 SY of the TCE areas prior to disturbance of the existing property at locations determined by the Engineer and in the presence of the Engineer. No less than one test per separate TCE/Encroachment Permit parcel shall be performed. Results of the tests shall be delivered to the Engineer within five (5) days of performance of each test.

In addition to the general requirements described above, the CONTRACTOR shall comply with the following requirements related to specific TCE/Encroachment Permit properties. For the purposes of liquidated damage calculations related to occupancy of a TCE/Encroachment Permit located on private property beyond the date specified, a "calendar month" is defined as all or part of the calendar month.

6.8.1 ~~TCE~~Encroachment Permit-1-OCFCD

The actual physical construction activities within the ~~TCE~~ Encroachment Permit area shall be limited to "NON-STORM-SEASON" (May 1st through September 30th (the "Construction Period") unless special written permission is acquired by the CONTRACTOR. No work shall be performed between October 1st and April 30th without prior authorization and approval obtained from the OCFCD. During the Construction Period, the CONTRACTOR's use and occupancy of the ~~TCE~~ Encroachment Permit will be non-exclusive, subject to the rights and limitations set forth below:

- CONTRACTOR shall provide the Engineer a minimum of forty (40)-days written notice as to when the Construction Period will commence.
- Except as to those improvements identified below as being protected in place, improvements within the ~~TCE~~ Encroachment Permit area can be removed as needed to allow for construction activities:
- The following improvements within the ~~TCE~~ Encroachment Permit area will be protected in place:
  - OCSD facilities
  - OCWD facilities
  - City of Santa Ana sewer facilities
  - Santa Ana River Trail
- All Orange County Flood Control ("District") improvements disturbed, damaged, vandalized or removed as a result of the CONTRACTOR's activities within, upon, under or over OCFCD's ROW shall be repaired, restored or replaced at the CONTRATOR'S expense in conformance with Orange County Public Works (OC Public Works) Standard plans and to the satisfaction of the Director of OC Public Works or his designee (herein after "Designee") within sixty (60) calendar days of the issuance of written notice by Director. If the CONTRACTOR fails to repair, restore or replace OCFCD's improvements within 60 calendar days, Engineer may, in his sole and absolute discretion, cause the repair, restoration or replacement of OCFCD's improvements to be completed by OCFCD's personnel or outside contractors and the CONTRACTOR shall be solely responsible for these costs and expenses. The CONTRACTOR agrees that in an emergency situation which threatens the public's health, safety or welfare as determined by OCFCD in their sole and absolute discretion, OCFCD shall be permitted to cause the repair, replacement or restoration of OCFCD's improvements without prior notice to CONTRACTOR and CONTRACTOR shall be solely responsible for the cost of such repair, restoration or replacement in accordance with the procedures described above.
- The CONTRACTOR agrees that if any of the CONTRACTOR'S improvements are disturbed, damaged or removed by OCFCD during the course of OCFCD's operating, maintaining, repairing, improving, restoring or enlarging OCFCD's improvements within, upon, over, or under OCFCD's ROW, the CONTRACTOR shall be responsible for replacing, repairing, restoring or removing the CONTRACTOR's improvements to the satisfaction of OCFCD solely at the CONTRACTOR'S expense within sixty (60) calendar days of receiving written notice from the Engineer.
- The CONTRACTOR'S activities within OCFCD ROW allowed in this ~~TCE~~ Encroachment Permit shall be performed during the NON-STORM-SEASON (May 1st through September 30th). No work shall be performed between October 1st and April 30th without prior authorization and approval obtained from the assigned County inspector.
- If any approved activity within a bikeway or trail area is anticipated to have an impact or disruption upon normal recreational use, prior to the CONTRACTOR's activities within, upon, under or over OCFCD's ROW, the CONTRACTOR shall submit in writing a detailed Traffic Control Plan for the written approval of OCFCD. Upon receipt of OCFCD's written approval, the CONTRACTOR shall implement the approved Traffic Control Plan. The CONTRACTOR shall not conduct any activity within, upon, under or over OCFCD's ROW until it has implemented the approved Traffic Control Plan.
- No construction materials are to be stored in a way that impedes and/or interferes with bikeway use, channel inspection or maintenance operations.
- It shall be the responsibility of the CONTRACTOR to dispose of any of the existing chain link fencing removed. However, if it is determined by OCFCD inspection staff that the fence condition is good for salvage, the CONTRACTOR shall use caution and remove the fencing fabric, roll it up in 50' long rolls and deliver the material to OC Public Works/Operations and Maintenance Yard at 2301 Glassell, Orange, CA 92865, at the CONTRACTOR's sole cost and expense within five working days following removal.
- Any existing chain link fencing shall include the installation of new corner posts in conformance with OC Public Works Std. Plan 600-0-OC and be repaired to the satisfaction of the assigned inspector.

- The CONTRACTOR shall provide emergency access to Police, Fire and District personnel during TCE period.
- OCFCD access gates are to be immediately locked upon entering or exiting OCFCD ROW.
- Vehicular speeds on OCFCD access roads shall not exceed a maximum of 10 MPH.
- The CONTRACTOR shall be required to yield the right-of-way to recreational users in cases where the OCFCD access road is also designated as a bikeway or riding/hiking trail. In such cases, the CONTRACTOR shall drive vehicles off to the right side of the access road/bikeway/trail improvements, stop and allow the recreational user to pass by prior to commencing to the CONTRATOR'S desired location.
- Prior to the termination of the Construction Period, the CONTRACTOR will remove from the ~~TCE~~ Encroachment Permit area all construction equipment and materials including, without limitation, any temporary fence, any temporary improvements, and all construction-related debris. The ~~TCE~~ Encroachment Permit area will be restored to a condition that is as functionally equivalent as is practicable to its condition prior to commencement of the construction activities, as indicated above.

~~6.8.2 TCE-2-Nova Academy~~

~~The CONTRACTOR's use of this area (Construction Period for TCE-2-Nova Academy) is limited to the time period between the end of the 2018-2019 school year to the beginning of the 2019-2020 school year. CONTRACTOR shall notify the Engineer in writing forty (40) days prior to its scheduled start date of its planned occupancy of the TCE area, and CONTRACTOR shall provide weekly updates of that planned start date until occupancy actually begins.~~

~~The maximum time limit will be measured from the date that the CONTRACTOR first occupies the TCE area until the area is restored by the CONTRACTOR and accepted by the Engineer and the property owner.~~

~~During the Construction Period for TCE-2-Nova Academy, CONTRACTOR shall place a temporary fence around the TCE area, provided however, no fence shall be placed around or across no more than one-half of the walkway or pathway to any entrance to the building and the remaining walkway in temporary use shall be in compliance with ADA requirements. Reasonable pedestrian access to the property shall be maintained at all times. Access to the TCE area shall be from the public right of way. Except as to those improvements identified below as being protected in place, improvements within the TCE area can be removed as needed for construction activities. The following improvements within the TCE area shall be protected in place:~~

- ~~Steps and railings~~
- ~~Concrete banding immediately adjacent to building~~
- ~~Raised concrete planter~~
- ~~Four (4) trees~~
- ~~Fixed bike and skateboard racks~~

~~The following improvements within the TCE area will be replaced:~~

- ~~Pavers to be consistent with the proposed improvements within Sasscer Park~~
- ~~Tree wells or planter areas around existing trees~~

~~Drainage patterns and/or systems shall be maintained during construction and restored to pre-existing conditions. Prior to the termination of the Construction Period for TCE-2-Nova Academy, the CONTRACTOR shall remove from the TCE area all construction equipment and materials including, without limitation, any temporary fence, any temporary improvements, and all construction-related debris. The TCE area shall be restored to a condition that is as functionally equivalent as is practicable to its condition prior to commencement of the construction activities, as indicated above.~~

6.8.3 TCE-~~3~~2-76 Station

The CONTRACTOR's use of this area is limited to one twenty-eight (28) day period (Construction Period for TCE-~~3~~2-76 Station). CONTRACTOR shall notify the Engineer in writing forty (40) days prior to its scheduled start date of its planned occupancy of the TCE area, and CONTRACTOR shall provide weekly updates of that planned start date until occupancy actually begins.

The maximum time limit will be measured from the date that the CONTRACTOR first occupies the TCE

c) US Army Corps of Engineers Section 408 Permit – Authorization to construct in US Federal Waters

d) California Department of Fish and Wildlife Section 1600 Permit (Streambed Alteration Agreement)

e) Orange County Flood Control District (OCFCD) Encroachment Permit – requires annual renewal by CONTRACTOR

f) California Public Utilities Commission (CPUC) Order to Construct At-Grade Crossings

g) City of Santa Ana Building Development Plan Approval

CONTRACTOR shall perform the tasks necessary to renew AUTHORITY-acquired permits during the project duration, if necessary. CONTRACTOR shall prepare and submit any supplemental information required by the authority / agency providing the permit. CONTRACTOR shall pay all costs associated with the renewal process and submission of supplemental information. AUTHORITY will reimburse the CONTRACTOR for the actual cost of the permit renewal fee imposed by the authority / agency providing the permit. CONTRACTOR shall not add any handling charges or markups of any kind to the actual permit renewal fee.

7.2 CONTRACTOR-Acquired Permits

The CONTRACTOR shall apply for and obtain all other permits and licenses required to perform the work ~~and will include the cost of the required permits in the bid price~~. Full compensation for complying with these permit requirements shall be considered as included in the prices paid for the various contract items of work and no additional compensation will be allowed therefor.

Below is a listing of permits that the CONTRACTOR shall obtain. The listing is not warranted to be complete, and the omission of any permit or license required by law, statute, or ordinance does not relieve the CONTRACTOR from the requirement to obtain~~,~~ and comply with~~, and pay for~~ such permit.

a) City of Santa Ana Encroachment Permit

b) City of Garden Grove Encroachment Permit

c) Rider to the OCFCD Encroachment Permit

d) NPDES General Permit – Annual SWPPP Certification and Fee

e) City of Santa Ana Building Permit(s) for MSF Building and TPSS's

f) City of Santa Ana Permits for Temporary Buildings as needed for CONTRACTOR Operations.

g) City of Santa Ana Traffic Control Permits

h) City of Garden Grove Traffic Control Permits

SC-8 Materials & Services

8.1 Source of Supply and Quality of Materials

The CONTRACTOR shall furnish all materials required to complete the work, except materials that are designated in the specifications to be furnished by the AUTHORITY, which are the ticket vending machines (TVM's) and the streetcar vehicles.

Only materials conforming to the requirements of the specifications shall be incorporated in the Work. All materials which the Engineer has determined do not conform to the requirements of the plans and specifications will be rejected whether in place or not. The rejected materials shall be removed immediately from the site of the work, unless otherwise permitted by the Engineer. No rejected material, the defects of which have been subsequently corrected, shall be used in the Work, unless approval in writing has been given by the Engineer. Upon failure of the CONTRACTOR to comply promptly with any order of the Engineer made under the provisions in this Section SC-8.1, the Engineer shall have authority to cause the removal and replacement of rejected material and to deduct the cost thereof from any moneys due or to

If increased settlements are noticed or if distress to levees or the channel lining is observed, the CONTRACTOR shall be prepared to take appropriate mitigation measures to stabilize the levee system. The CONTRACTOR's Work may be stopped at any time in the event the Permitting Agencies or Geotechnical Engineer note excessive settlement and/or high potential for damage to pre-existing infrastructure. This potential stoppage of the Work shall not be cause for additional compensation to the CONTRACTOR.

26.3 Westminster Bridge Approaches

The CONTRACTOR shall monitor settlement of the approach embankments/abutment systems during construction. A Settlement Monitoring Installation Plan shall be submitted by the CONTRACTOR and approved by the AUTHORITY prior to implementing the monitoring plan and initiating any Work. The Settlement Monitoring Plan shall consist of installation of a minimum of eight (8) total settlement-monitoring devices at each approach embankment at locations of highest anticipated settlement as approved by the AUTHORITY through the Project's standard submittal process. CONTRACTOR shall provide the following settlement-monitoring devices at each bridge approach:

- a minimum of five (5) settlement-monitoring devices shall be installed along the middle of the approach embankment; and,
- a minimum of three (3) settlement-monitoring devices shall be installed near the back of the proposed retaining walls.

Settlement devices shall be installed prior to the placement of any fill material. A baseline reading should be taken immediately. The type of settlement devices used in the CONTRACTOR's Settlement Monitoring Installation Plan shall be approved by the AUTHORITY as part of the submittal process. During construction and after the fill has been placed up to the final grade, the CONTRACTOR shall take settlement measurements every two to three days. Settlement-monitoring readings and associated data and information shall be provided to the AUTHORITY at least once per week for evaluation by the Geotechnical Engineer. Evaluation will include investigation of whether the anticipated settlement is complete. Settlement is deemed as complete following the prescribed settlement period and when less than 0.1 inches of settlement is measured in three consecutive readings taken at four-day intervals with approval by the Geotechnical Engineer of Record. The prescribed settlement period (reference *Exhibit M-1 Foundation Report Westminster Bridge*) starts after the completion of the proposed fill placement up to the final grade. If increased settlements are noticed or if distress to the surrounding area and/or adjacent property is observed, the CONTRACTOR shall be prepared to take appropriate mitigation measures. The CONTRACTOR's Work may be stopped at any time in the event the Geotechnical Engineer notes excessive settlement and/or high potential for damage to pre-existing infrastructure. This potential stoppage of the Work shall not be cause for additional compensation to the CONTRACTOR.

26.4 Walls

The CONTRACTOR shall monitor settlement at retaining wall locations prior to and during wall construction. The Settlement Monitoring Installation Plans indicated above for the Bridge Approaches include the settlement-monitoring activities necessary for construction at the Project's Walls as well (reference *Exhibit M-5 Geotechnical Report for Earth Retaining Systems)*.

Long-term consolidation settlements are anticipated. Settlement-sensitive improvements (e.g., railroad tracks) shall commence only after long-term settlements are deemed complete by the Geotechnical Engineer of Record. The required waiting periods for long-term settlements (corresponding to 90% consolidation settlements) of the Walls are summarized below as follows:

- Walls 101/501: ~~1 month~~30 calendar days
- Walls 108/508: ~~4 months~~122 calendar days
- Walls 144/544: ~~8 months~~243 calendar days
- Walls 153/553: ~~6 months~~183 calendar days

For each Wall specified, settlement monitoring shall include monitoring as described herein including at the highest (tallest) wall locations. Regular settlement measurements as described herein shall be performed by the CONTRACTOR during the prescribed waiting period for each pair of Walls as listed above.

5. ASTM C33: Standard Specification for Concrete Aggregates.

6. ASTM C150: Standard Specification for Portland Cement.

7. ASTM C260: Standard Specification for Air-Entraining Admixtures for Concrete.

8. ASTM C618: Standard Specification for Coal Fly Ash and Raw or Calcined Natural Pozzolan for Use in Concrete.

9. ASTM C494: Standard Specification for Chemical Admixtures for Concrete.

10. ASTM C1260: Standard Test Method for Potential Alkali Reactivity of Aggregates (Mortar-Bar Method).

11. ASTM D257: Standard Test Methods for DC Resistance of Conductance of Insulating Materials.

D. Standard Specifications for Public Work Construction (SSPWC), "Greenbook"

1.03 RELATED SECTIONS

A. Section 03 20 00 - Concrete Reinforcement

1.04 SUBMITTALS AND DELIVERABLES

~~1.04~~A. Submit design calculations that are sealed and signed by an engineer who is registered as a civil engineer in the State of California.

~~A.~~B. Submit shop drawings, material specifications, and installation procedures for precast panels

~~B.~~C. Submit concrete panel mix design not less than 60 calendar days before the manufacture of concrete panels.

~~C.~~D. Submit concrete panel compressive strength certification and test report not less than 60 calendar days before the manufacture of concrete panels.

~~D.~~E. Submit manufacturer's OCTA-approved Quality Assurance Program plan not less than 60 calendar days before the manufacture of concrete panels.

1.05 DELIVERY, STORAGE AND HANDLING

A. The Contractor shall load, transport, and handle the material in a manner which will prevent damage to the material.

1.06 QUALITY ASSURANCE

A. Manufacturer's Qualifications for Concrete Panels:

3. Air entraining admixtures shall conform to ASTM C260 and shall be used to produce 7 percent ±1 percent entrained air in the concrete after all admixtures have been incorporated.

4. Water reducing admixtures shall be used only with the approval of the Engineer and shall conform to ASTM C494, Types A, B, D, or E.

5. High-range water reducers (superplasticizers) and retarding admixtures, in quantities appropriate for the ambient temperatures, may be permitted, subject to the approval of the Engineer.

6. The use of calcium chloride or any admixture containing chloride ions will not be permitted.

I. Flyash:

1. Flyash, Type C, meeting the requirements of ASTM C618 may be used as a cement replacement with the approval of the Engineer.

2. Type F may be used to modify potentially reactive aggregates.

3. This mix shall be subject to the requirements of ASTM C1260.

4. Flyash may replace up to 15 percent, by weight, of the cement.

J. Water:

1. Potable, clean.

2. Free of oils, acids, and organic matter.

K. Maximum total chloride ion content contributed from all ingredients of concrete including water, aggregates, cement and admixtures measured as a weight percent of cement to not exceed 0.10 for precast concrete.

2.02 DUCTBANK/WALKWAY CONCRETE PANEL

1. Concrete panels for ductbank/walkway shall be pre-fabricated panels with non-skid surface. The precast concrete panels shall have a weight limited to 75 lbs. per piece. Material shall be precast reinforced concrete. The non-skid surface shall conform to the requirements in Section 51-1.03E(6), "Nonskid Abrasive Finish" of the 2015 Caltrans Standard Specifications.

2. Panels shall be designed to facilitate installation on concrete ~~steps as~~walkway as shown on the Contract Drawings. Precast concrete panels shall be modified such that no concrete or metal portion of the panel comes into contact with the ductbank below the panels. Panels shall be constructed in a manner that shall ensure their non-conductivity. Panels shall be tested for non-conductivity before shipment. Panel dimensions shall be as indicated on the Contract Drawings. Panel width, measured parallel to bridge center line shall not be less than 6 inches.

PART 3 EXECUTION

3.01 DUCTBANK/WALKWAY CONCRETE PANEL INSTALATION

A. Construct ductbank/walkway panels to the alignment shown on the Contract Drawings, as specified in these technical specifications

1. Concrete panels including rubber filler shall be installed in accordance with the manufacturer's installation instructions and recommendations.

2. Contractor operations during construction or at any time after concrete panels are installed shall not allow any steel tools to contact or damage concrete panels. Panels showing spalling or cracking, however minor, before final acceptance of track will be rejected and shall be removed and replaced by Contractor at no cost to OCTA.

END OF SECTION 34 10 40

NOTES:

1. NOT USED.
2. SEE CIVIL IMPROVEMENT PLANS FOR SIDEWALK, CURB, CURB RAMPS, SAWCUT AND JOIN INFORMATION.
3. SEE DRAWINGS CD01 - CD06 FOR INTERSECTION DETAILS.
4. SEE DRAWINGS LN01 - LN20 FOR LANDSCAPING PLANS.
5. SEE DRAWINGS P-PN10 - P-PN22 FOR PLATFORM ARCHITECTURAL PLANS.

CONSTRUCTION NOTE:

B 19 INSTALL DETECTABLE WARNING SURFACE PER DRAWING 10 OF SPPWC STD PLAN NO. 111-5.

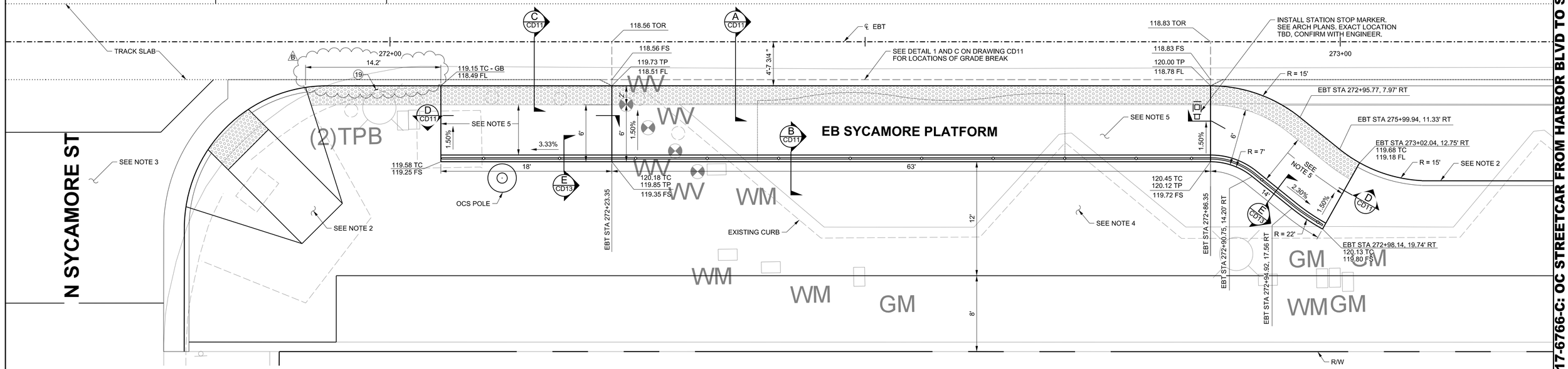

Underground Service Alert of Southern California
CALL: **TOLL FREE 1-800-422-4133**
TWO WORKING DAYS BEFORE YOU DIG

NOTICE TO CONTRACTOR

PURSUANT TO ASSEMBLY BILL 3019 NO EXCAVATION PERMIT IS VALID UNLESS THE CONTRACTOR CONTACTS AND OBTAINS AN INQUIRY I.D. NUMBER FROM "UNDERGROUND SERVICE ALERT" (1-800-422-4133) AT LEAST TWO WORKING DAYS PRIOR TO COMMENCING EXCAVATION.

5 0 5 10
1"=5'

FILE NO.: SHT-CP09-62481-R0B.dgn 2/21/2018 10:24:10 AM

REVISIONS

NUMBER	DATE	INITIALS	DESCRIPTION	APPROVED	INSTALLED
A	12/2017		ISSUE FOR BID		
B	03/08/18	JJV	TACTILE WARNING SURFACE		

REFERENCES

BENCHMARK NO.: 3B-98-85 (PT. 400) ELEV.: 140.19 (NAVD 88)

FOUND 3.75" OCS ALUMINUM BENCHMARK DISK STAMPED "3B-98-5", SET IN THE NORTHWESTERLY CORNER OF A 4 FT. BY 8 FT. CONCRETE CATCH BASIN. MONUMENT IS LOCATED IN THE SOUTHEASTERLY CORNER OF THE INTERSECTION OF FRUIT STREET AND THE ATCHINSON TOPEKA AND SANTA FE RAILROAD, 23 FT. EASTERLY OF THE CENTERLINE OF THE RAILWAY, 19.5 FT. SOUTHERLY OF THE CENTERLINE OF FRUIT STREET AND 14.3 FT. WEST OF A POWER POLE (#716815E"). ORANGE COUNTY SURVEYS, PUBLIC WORKS.

REGISTERED PROFESSIONAL ENGINEER JOSUE J. VAGLIENTY RCE No. C70783 Exp. 06/30/2019 CIVIL STATE OF CALIFORNIA

HNTB
The HNTB Companies Infrastructure Solutions
200 E. Sandpointe Ave., Ste. 200
Santa Ana, CA 92707
Phone: 714-460-1600

PREPARED UNDER THE SUPERVISION OF:	J. VAGLIENTY		DATE
		RCE NO.: C56141	06/2019
DESIGNED: BAO TRAN	DRAWN: S. KIVRIZIS	CHECKED: J. VAGLIENTY	10/2017

CP09

PLATFORM DETAIL

OC STREETCAR

W 4TH ST AT N SYCAMORE ST

ORANGE COUNTY TRANSPORTATION AUTHORITY

CITY OF SANTA ANA PROJECT NO. 17-6766-C: OC STREETCAR FROM HARBOR BLVD TO SARTC

NOTES:

1. NOT USED.
2. SEE CIVIL IMPROVEMENT PLANS FOR SIDEWALK, CURB, CURB RAMP, SAWCUT AND JOIN INFORMATION.
3. SEE DRAWINGS CD01 - CD06 FOR INTERSECTION DETAILS.
4. SEE DRAWINGS LN01 - LN20 FOR LANDSCAPING PLANS.
5. SEE DRAWINGS P-PN10 - P-PN22 FOR PLATFORM ARCHITECTURAL PLANS.

CONSTRUCTION NOTE:

19 INSTALL DETECTABLE WARNING SURFACE PER DRAWING 10 OF SPPWC STD PLAN NO. 111-5.

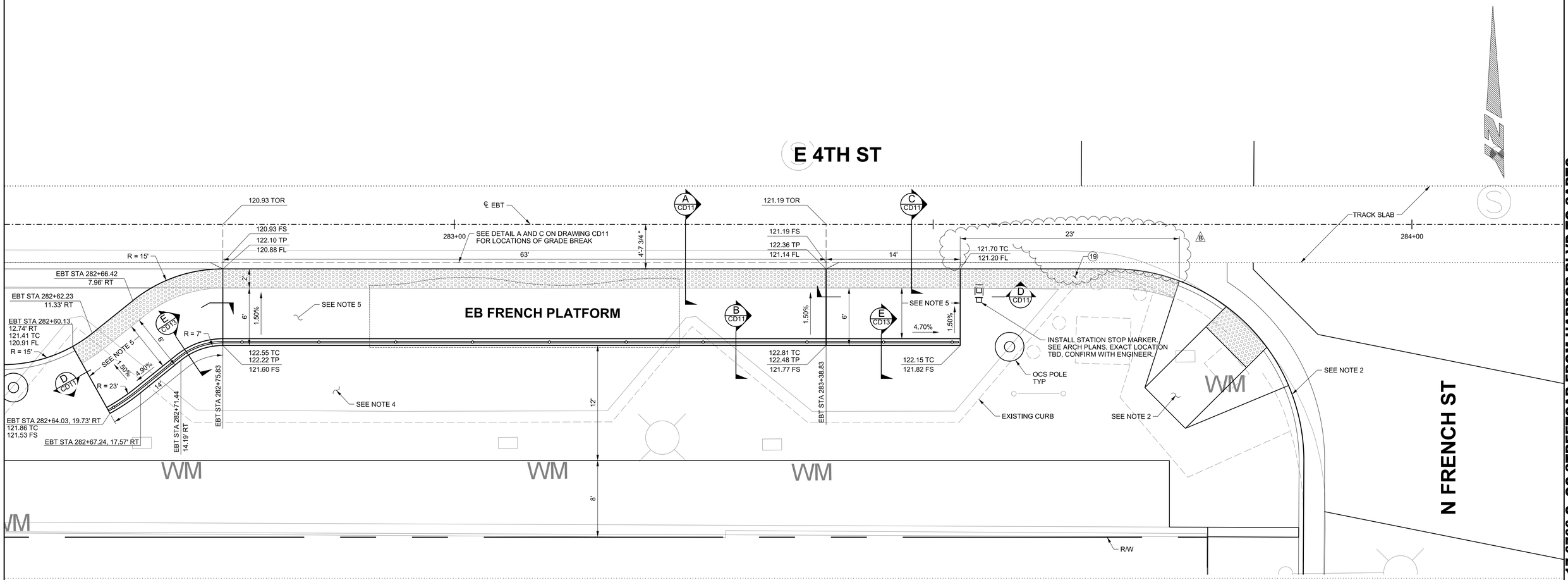

Underground Service Alert
of Southern California
811
CALL: **TOLL FREE 1-800-422-4133**
TWO WORKING DAYS BEFORE YOU DIG

NOTICE TO CONTRACTOR

PURSUANT TO ASSEMBLY BILL 3019 NO EXCAVATION PERMIT IS VALID UNLESS THE CONTRACTOR CONTACTS AND OBTAINS AN INQUIRY I.D. NUMBER FROM "UNDERGROUND SERVICE ALERT" (1-800-422-4133) AT LEAST TWO WORKING DAYS PRIOR TO COMMENCING EXCAVATION.

5 0 5 10
1"=5'

SHT-CP10-62481-R0B.DGN 2/21/2018 10:39:17 AM

FILE NO.:

REVISIONS

NUMBER	DATE	INITIALS	DESCRIPTION	APPROVED	INSTALLED
A	12/2017		ISSUE FOR BID		
B	03/08/18	JJV	TACTILE WARNING SURFACE		

REFERENCES

BENCHMARK NO.: 3B-98-85 (PT. 400) ELEV.: 140.19 (NAVD 88)

FOUND 3.75" OCS ALUMINUM BENCHMARK DISK STAMPED "3B-98-5", SET IN THE NORTHWESTERLY CORNER OF A 4 FT. BY 8 FT. CONCRETE CATCH BASIN. MONUMENT IS LOCATED IN THE SOUTHEASTERLY CORNER OF THE INTERSECTION OF FRUIT STREET AND THE ATCHINSON TOPEKA AND SANTA FE RAILROAD, 23 FT. EASTERLY OF THE CENTERLINE OF THE RAILWAY, 19.5 FT. SOUTHERLY OF THE CENTERLINE OF FRUIT STREET AND 14.3 FT. WEST OF A POWER POLE (#716815E"). ORANGE COUNTY SURVEYS, PUBLIC WORKS.

REGISTERED PROFESSIONAL ENGINEER JOSUE J. VAGLIENTY RCE NO. C70783 Exp. 06/30/2019 CIVIL STATE OF CALIFORNIA

HNTB
The HNTB Companies Infrastructure Solutions
200 E. Sandpointe Ave., Ste. 200
Santa Ana, CA 92707
Phone: 714-460-1600

PREPARED UNDER THE SUPERVISION OF: J. VAGLIENTY — DATE
RCE NO.: C56141 — 06/2019
DESIGNED: BAO TRAN DRAWN: S. KIVRIZIS CHECKED: J. VAGLIENTY — 10/2017

PUBLIC WORKS DEPARTMENT Garden Grove Yours & Ambition Est. 1956 — OCTA — DOWNTOWN ORANGE COUNTY SANTA ANA

PLATFORM DETAIL
OC STREETCAR
E 4TH ST AT N FRENCH ST
ORANGE COUNTY TRANSPORTATION AUTHORITY

CP10

CITY OF SANTA ANA PROJECT NO. 17-6766-C: OC STREETCAR FROM HARBOR BLVD TO SARTC

NOTES:

1. NOT USED.
2. SEE CIVIL IMPROVEMENT PLANS FOR SIDEWALK, CURB, CURB RAMP, SAWCUT AND JOIN INFORMATION.
3. SEE DRAWINGS LN01 - LN20 FOR LANDSCAPING PLANS.
4. SEE DRAWINGS P-PN10 - P-PN22 FOR PLATFORM ARCHITECTURAL PLANS.

CONSTRUCTION NOTE:

(19) INSTALL DETECTABLE WARNING SURFACE PER DRAWING 10 OF SPPWC STD PLAN NO. 111-5.

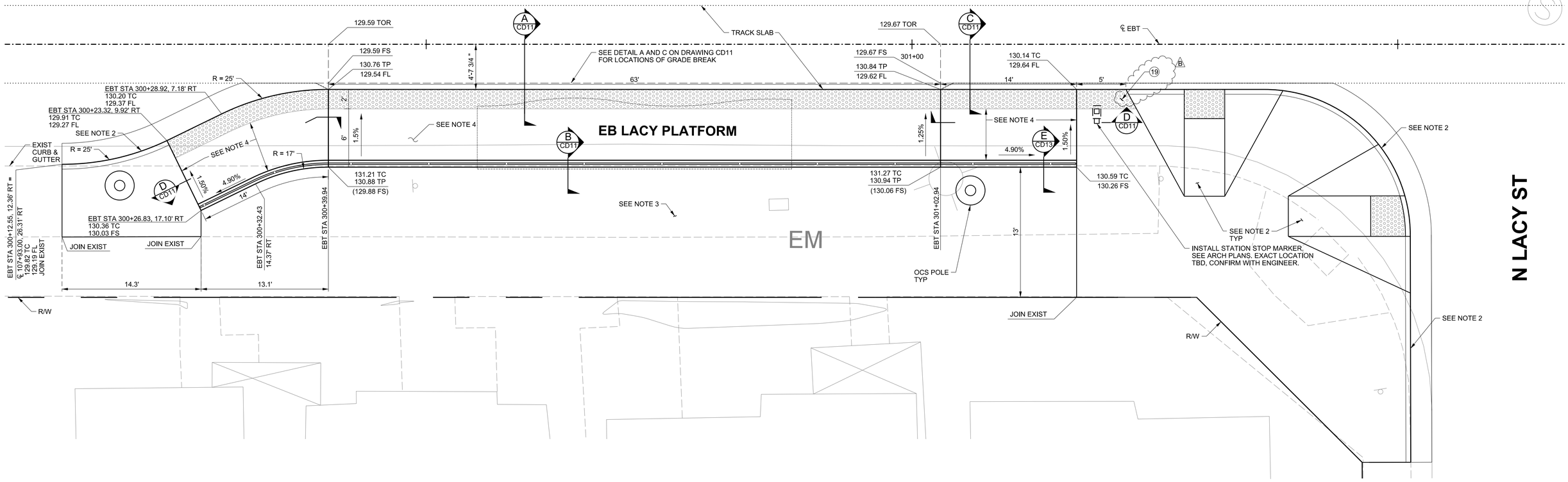

Underground Service Alert of Southern California
811
CALL: **TOLL FREE 1-800-422-4133**
TWO WORKING DAYS BEFORE YOU DIG

NOTICE TO CONTRACTOR

PURSUANT TO ASSEMBLY BILL 3019 NO EXCAVATION PERMIT IS VALID UNLESS THE CONTRACTOR CONTACTS AND OBTAINS AN INQUIRY I.D. NUMBER FROM "UNDERGROUND SERVICE ALERT" (1-800-422-4133) AT LEAST TWO WORKING DAYS PRIOR TO COMMENCING EXCAVATION.

5 0 5 10
1"=5'

SHT-CP11-62481-R08.DGN 10:42:42 AM 2/21/2018
SHT-CP11-62481-R08.dgn

FILE NO.:

REVISIONS

NUMBER	DATE	INITIALS	DESCRIPTION	APPROVED	INSTALLED
A	12/2017		ISSUE FOR BID		
B	03/08/18	JJV	TACTILE WARNING SURFACE		

REFERENCES

BENCHMARK NO.: 3B-98-85 (PT. 400) ELEV.: 140.19 (NAVD 88)

FOUND 3.75" OCS ALUMINUM BENCHMARK DISK STAMPED "3B-98-5", SET IN THE NORTHWESTERLY CORNER OF A 4 FT. BY 8 FT. CONCRETE CATCH BASIN. MONUMENT IS LOCATED IN THE SOUTHEASTERLY CORNER OF THE INTERSECTION OF FRUIT STREET AND THE ATCHINSON TOPEKA AND SANTA FE RAILROAD, 23 FT. EASTERLY OF THE CENTERLINE OF THE RAILWAY, 19.5 FT. SOUTHERLY OF THE CENTERLINE OF FRUIT STREET AND 14.3 FT. WEST OF A POWER POLE (#716815E"). ORANGE COUNTY SURVEYS, PUBLIC WORKS.

REGISTERED PROFESSIONAL ENGINEER JOSUE J. VAGLIENTY RCE NO. C70783 Exp. 06/30/2019 CIVIL STATE OF CALIFORNIA

HNTB
The HNTB Companies
Infrastructure Solutions
200 E. Sandpointe Ave., Ste. 200
Santa Ana, CA 92707
Phone: 714-460-1600

PREPARED UNDER THE SUPERVISION OF: J. VAGLIENTY — DATE

RCE NO.: C56141 — 06/2019

DESIGNED: BAO TRAN DRAWN: S. KIVRIZIS CHECKED: J. VAGLIENTY — 10/2017

PUBLIC WORKS DEPARTMENT Garden Grove Youth & Authority

OCTA

DOWNTOWN ORANGE COUNTY SANTA ANA

PLATFORM DETAIL

CP11

OC STREETCAR

E SANTA ANA BLVD AT N LACY ST (EASTBOUND)

ORANGE COUNTY TRANSPORTATION AUTHORITY

CITY OF SANTA ANA PROJECT NO. 17-6766-C; OC STREETCAR FROM HARBOR BLVD TO SARTC

NOTES:

1. NOT USED.
2. SEE CIVIL IMPROVEMENT PLANS FOR SIDEWALK, CURB, CURB RAMP, SAWCUT AND JOIN INFORMATION.
3. SEE DRAWINGS LN01 - LN20 FOR LANDSCAPING PLANS.
4. SEE DRAWINGS P-PN10 - P-PN22 FOR PLATFORM ARCHITECTURAL PLANS.

CONSTRUCTION NOTE:

19 INSTALL DETECTABLE WARNING SURFACE PER DRAWING 10 OF SPPWC STD PLAN NO. 111-5.

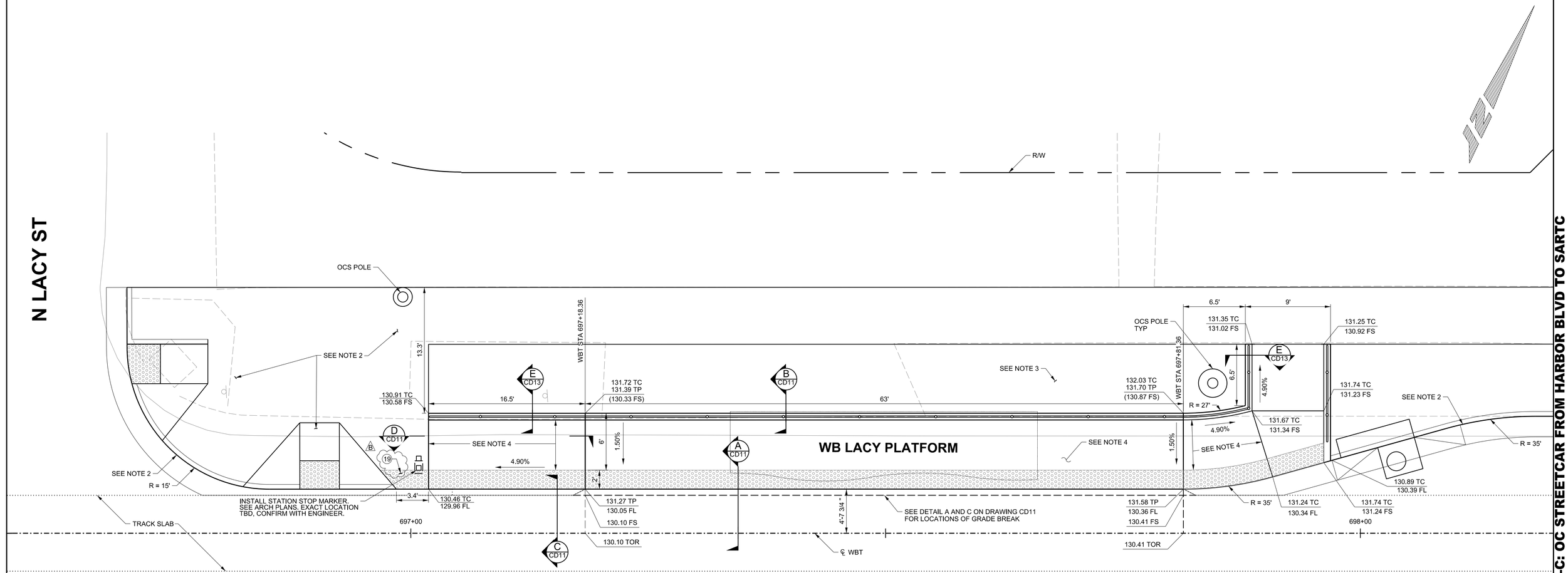

Underground Service Alert
of Southern California
CALL: **TOLL FREE 1-800-422-4133**
TWO WORKING DAYS BEFORE YOU DIG

NOTICE TO CONTRACTOR

PURSUANT TO ASSEMBLY BILL 3019 NO EXCAVATION PERMIT IS VALID UNLESS THE CONTRACTOR CONTACTS AND OBTAINS AN INQUIRY I.D. NUMBER FROM "UNDERGROUND SERVICE ALERT" (1-800-422-4133) AT LEAST TWO WORKING DAYS PRIOR TO COMMENCING EXCAVATION.

5 0 5 10
1"=5'

SHT-CP12-62481-R0B.DGN 2/21/2018 10:47:18 AM

FILE NO.:

REVISIONS

NUMBER	DATE	INITIALS	DESCRIPTION	APPROVED	INSTALLED
A	12/2017		ISSUE FOR BID		
B	03/08/18	JJV	TACTILE WARNING SURFACE		

REFERENCES

BENCHMARK NO.: 3B-98-85 (PT. 400) ELEV.: 140.19 (NAVD 88)

FOUND 3.75" OCS ALUMINUM BENCHMARK DISK STAMPED "3B-98-5", SET IN THE NORTHWESTERLY CORNER OF A 4 FT. BY 8 FT. CONCRETE CATCH BASIN. MONUMENT IS LOCATED IN THE SOUTHEASTERLY CORNER OF THE INTERSECTION OF FRUIT STREET AND THE ATCHINSON TOPEKA AND SANTA FE RAILROAD, 23 FT. EASTERLY OF THE CENTERLINE OF THE RAILWAY, 19.5 FT. SOUTHERLY OF THE CENTERLINE OF FRUIT STREET AND 14.3 FT. WEST OF A POWER POLE (#716815E"). ORANGE COUNTY SURVEYS, PUBLIC WORKS.

REGISTERED PROFESSIONAL ENGINEER JOSUE J. VAGLIENTY RCE NO. C70783 Exp. 06/30/2019 CIVIL STATE OF CALIFORNIA

HNTB
The HNTB Companies Infrastructure Solutions
200 E. Sandpointe Ave., Ste. 200
Santa Ana, CA 92707
Phone: 714-460-1600

PREPARED UNDER THE SUPERVISION OF: J. VAGLIENTY — DATE
RCE NO.: C56141 — 06/2019
DESIGNED: BAO TRAN DRAWN: S. KIVRIZIS CHECKED: J. VAGLIENTY — 10/2017

PUBLIC WORKS DEPARTMENT Garden Grove Yesterday & Tomorrow Ambition SINCE 1874 & 1911 — OCTA — DOWNTOWN ORANGE COUNTY SANTA ANA

CP12

PLATFORM DETAIL

OC STREETCAR

E SANTA ANA BLVD AT N LACY ST (WESTBOUND)

ORANGE COUNTY TRANSPORTATION AUTHORITY

CITY OF SANTA ANA PROJECT NO. 17-6766-C: OC STREETCAR FROM HARBOR BLVD TO SARTC

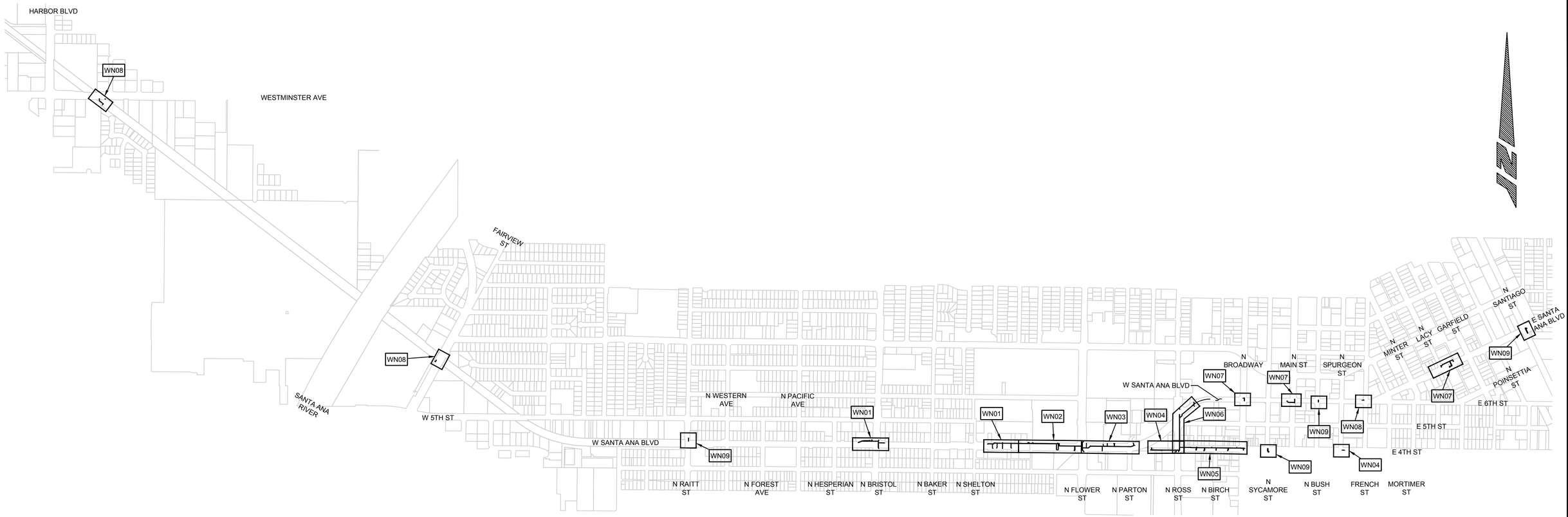

KEY MAP INDEX

	DESCRIPTION
WG01	KEY MAP INDEX AND KEY MAP
WG02	GENERAL NOTES, NOTES TO CONTRACTOR, WATER CONSTRUCTION NOTES, JOB SITE SAFETY, ENGINEER'S NOTICE TO CONTRACTOR, STANDARD SYMBOLS, AND CITY OF SANTA ANA'S GENERAL NOTES
WN01	SANTA ANA BLVD STA: 09+96 TO 12+59, 20+00 TO 20+80 AND 39+96 TO 44+00 BRISTOL STREET STA: 29+96 TO 31+08
WN02	SANTA ANA BLVD STA: 44+00 TO 52+44
WN03	SANTA ANA BLVD STA: 70+00 TO 76+85 FLOWER STREET STA: 59+96 TO 60+89
B WN04	WALKWAY (SASSCER PARK) STA: 79+95 TO 83+81 E 4TH STREET STA: 260+00 TO 260+32
WN05	W 4TH STREET STA: 100+00 TO 108+38 BIRCH ST STA: 110+00 TO 110+33 AND BROADWAY STA: 120+00 TO 120+29
B WN06	ROSS STREET STA: 90+00 TO 94+58 SANTA ANA BLVD STA: 130+00 TO STA. 132+90
WN07	SANTA ANA BLVD STA: 140+00 TO 140+18, 159+96 TO 161+03 AND 190+00 TO 191+97 BROADWAY STA: 150+00 TO 150+40, MAIN ST STA: 169+96 TO 170+44 AND LACY ST STA: 180+00 TO 180+25
B WN08	WESTMINSTER AVE STA: 200+00 TO 201+05 AND FIRE HYDRANT LOCATIONS
WN09	BUSH ST STA: 210+00 TO 210+26, SYCAMORE ST STA: 220+00 TO 220+46, SANTIAGO ST STA: 230+00 TO 230+70, AND SANTA ANA BLVD STA: 240+00 TO 240+17, RAITT ST STA: 250+00 TO 250+40
WN10	MISCELLANEOUS DETAILS
WN11	MISCELLANEOUS DETAILS
WN12	MISCELLANEOUS DETAILS

KEY MAP

NOT TO SCALE

CITY OF SANTA ANA PROJECT NO. 17-6766-C; OC STREETCAR FROM HARBOR BLVD TO SARTC

Underground Service Alert
of Southern California
811
CALL: **TOLL FREE 1-800-422-4133**
TWO WORKING DAYS
BEFORE YOU DIG

NOTICE TO CONTRACTOR

PURSUANT TO ASSEMBLY BILL 3019 NO EXCAVATION PERMIT IS VALID UNLESS THE CONTRACTOR CONTACTS AND OBTAINS AN INQUIRY I.D. NUMBER FROM "UNDERGROUND SERVICE ALERT" (1-800-422-4133) AT LEAST TWO WORKING DAYS PRIOR TO COMMENCING EXCAVATION.

M:\2HNTG\10400\Public_Works\Sheets_wotr-Addendum\SHT-WG01-62481-R0B.dwg 02/27/18 8:42am

SHT-WG01-62481-R0B.DWG

FILE NO.:

REVISIONS

NUMBER	DATE	INITIALS	DESCRIPTION	APPROVED	INSTALLED
A	12/2017		ISSUE FOR BID		
B	03/08/18	NAG	SHEET STATION REVISED		

REFERENCES

BENCHMARK NO.: 3B-98-85 (PT. 400) ELEV.: 140.19 (NAVD 88)

FOUND 3.75" OCS ALUMINUM BENCHMARK DISK STAMPED "3B-98-5", SET IN THE NORTHWESTERLY CORNER OF A 4 FT. BY 8 FT. CONCRETE CATCH BASIN. MONUMENT IS LOCATED IN THE SOUTHEASTERLY CORNER OF THE INTERSECTION OF FRUIT STREET AND THE ATCHINSON TOPEKA AND SANTA FE RAILROAD, 23 FT. EASTERLY OF THE CENTERLINE OF THE RAILWAY, 19.5 FT. SOUTHERLY OF THE CENTERLINE OF FRUIT STREET AND 14.3 FT. WEST OF A POWER POLE (#716815E"). ORANGE COUNTY SURVEYS, PUBLIC WORKS.

REGISTERED PROFESSIONAL ENGINEER — NEHA A. GAJJAR — No. 55574 — Exp. 12-31-18 — CIVIL — STATE OF CALIFORNIA

HNTB
The HNTB Companies
Infrastructure Solutions
200 E. Sandpointe Ave., Ste. 200
Santa Ana, CA 92707
Phone: 714-460-1600

PSOMAS
3 HUTTON CENTRE DRIVE, SUITE 200
SANTA ANA, CA 92707
(714) 751-7373 WWW.PSOMAS.COM

PREPARED UNDER THE SUPERVISION OF: NEHA GAJJAR — DATE

RCE NO.: 55574 — 12/2018

DESIGNED: MATTHEW VERA DRAWN: MATTHEW VERA CHECKED: NEHA GAJJAR — 10/2017

PUBLIC WORKS DEPARTMENT — Golden Opportunities — Yours & Ours — Anaheim — OCTA — DOWNTOWN ORANGE COUNTY — SANTA ANA

WATER IMPROVEMENT PLANS

OC STREETCAR

KEY MAP INDEX AND KEY MAP

ORANGE COUNTY TRANSPORTATION AUTHORITY

WG01

GENERAL NOTES

1. STATIONING IS ALONG CENTERLINE OF PIPELINE.
2. ALL CONSTRUCTION DETAILED ON THESE PLANS SHALL BE PERFORMED IN ACCORDANCE WITH THE STANDARD SPECIFICATIONS FOR PUBLIC WORKS CONSTRUCTION, LATEST EDITION (GREENBOOK). EXCEPT AS MODIFIED BY THE CITY'S STANDARD DRAWINGS AND SPECIAL PROVISIONS AND THIS PROJECT'S CONTRACT DOCUMENTS.
3. UTILITIES SHOWN ON THESE PLANS ARE CORRECT AND ACCURATE TO THE EXTENT OF AVAILABLE RECORDS AND KNOWLEDGE. THE CONTRACTOR, HOWEVER IS REQUIRED TO ASCERTAIN THE EXACT LOCATION OF ALL UNDERGROUND FACILITIES PRIOR TO DOING ANY WORK THAT MAY DAMAGE SUCH FACILITIES OR INTERFERE WITH THEIR SERVICE.
4. PRIOR TO ANY CONSTRUCTION, THE CONTRACTOR SHALL POTHOLE AND LOCATE ALL EXISTING UTILITY AND PIPELINE CROSSINGS AND CONNECTION POINTS, AND NOTIFY THE ENGINEER IN CASE OF INTERFERENCE OR CLOSE PROXIMITY TO PROPOSED IMPROVEMENTS. IN ADDITION, THE CONTRACTOR SHALL EXPOSE ALL UTILITIES AND SERVICES AT LEAST 300 LINEAR FEET IN ADVANCE OF THE ACTUAL PIPE EXCAVATION OPERATIONS. DEPTHS FOR EXISTING ELECTRICAL, FIBER OPTIC, GAS, TELEPHONE AND ALL OTHER SERVICE LATERALS ARE ASSUMED TO BE SHALLOW AND CONTRACTOR SHALL CONSTRUCT PIPELINE UNDER THESE FACILITIES, UNLESS OTHERWISE SHOWN ON PLANS. SEWER AND STORM DRAIN MAINS ARE ASSUMED TO BE DEEP AND CONTRACTOR SHALL CONSTRUCT PIPELINE OVER THESE FACILITIES, UNLESS OTHERWISE SHOWN ON PLANS. THE CONTRACTOR SHALL, AT HIS EXPENSE AND COST, CONSTRUCT ALL IMPROVEMENTS IN SUCH A MANNER AS WILL PROTECT ALL EXISTING UNDERGROUND UTILITIES AND, IN THE EVENT OF ANY CONFLICTS, SHALL NOTIFY THE ENGINEER.
5. THE CONTRACTOR SHALL ADJUST TO GRADE ALL CITY OWNED WATER VALVE CANS AND STREET CENTERLINE AND SURVEY MONUMENTS.
6. CONTRACTOR SHALL BE RESPONSIBLE FOR DEWATERING OF THE EXCAVATION, DISPOSAL OF WATER, AND FOR COMPLYING WITH ALL FEDERAL AND STATE REGULATIONS. CONTRACTOR SHALL DEWATER TRENCH UNTIL PIPE IS INSTALLED AND BACKFILLED. ALL DEWATERING SHALL BE DONE IN ACCORDANCE WITH RWQCB ORDERS AND THE PROJECT PERMIT PROVIDED BY THE CITY OF SANTA ANA.
7. CONTRACTOR SHALL PROVIDE TRAFFIC CONTROL IN CONFORMANCE WITH THE WORK AREA TRAFFIC CONTROL HANDBOOK (WATCH MANUAL) AND CITY OF SANTA ANA REQUIREMENTS.
8. WATER SERVICE SIZES AND LOCATIONS ARE SHOWN ON THESE PLANS TO THE EXTENT OF AVAILABLE RECORDS AND KNOWLEDGE. IN SOME CASES, SERVICE SIZES ARE NOT AVAILABLE FROM THE CITY'S RECORD INFORMATION. CONTRACTOR SHALL FIELD VERIFY THE SIZE AND LOCATION OF ALL SERVICES PRIOR TO REPLACEMENT/RECONNECTION.
9. ACTUAL FIELD CONDITIONS MAY VARY FROM THOSE SHOWN ON THE CONSTRUCTION DRAWINGS. THE CONTRACTOR SHALL BE RESPONSIBLE FOR VERIFYING ACTUAL ABOVE GROUND CONDITIONS PRIOR TO SUBMITTAL OF THE BID.
10. THE CONTRACTOR SHALL MAINTAIN AND PROTECT ALL EXISTING WATER SERVICE LINES UNTIL THE ACCEPTANCE OF THE NEW WATER MAIN AND SERVICES BY THE CITY OF SANTA ANA.
11. REPLACEMENT OF WATER SERVICE LINES AND METERS SHALL BE IN ACCORDANCE WITH CITY STANDARDS. SIZES OF METERS SHALL BE FIELD VERIFIED BY THE CONTRACTOR AND REPLACEMENT METERS SHALL MATCH THE EXISTING METER SIZE UNLESS OTHERWISE DIRECTED BY THE CITY.
12. THE CONTRACTOR SHALL FURNISH AND INSTALL ALL NECESSARY MATERIALS AND EQUIPMENT REQUIRED FOR PRESSURE TESTING, DISINFECTING, AND FLUSHING THE NEW WATER LINES AT NO ADDITIONAL COST TO THE CITY.
13. ALL EXISTING FIRE HYDRANTS SHALL BE REMOVED BY CONTRACTOR WHERE SHOWN ON PLANS. AFTER NEW PIPELINES HAVE BEEN TESTED AND DISINFECTED BY CONTRACTOR, AND ACCEPTED BY CITY, CONTRACTOR SHALL REMOVE FIRE HYDRANTS AND FIRE HYDRANT BURYS A MINIMUM OF 12" BELOW FINISH GRADE AND FILL FIRE HYDRANT BURYS WITH CONCRETE. THEREAFTER, CONTRACTOR SHALL SAWCUT EXISTING CONCRETE WALK AND DISPOSE OF SAME AT A LEGAL DISPOSAL SITE, AND REPLACE CONCRETE WALK OVER ABANDONED FIRE HYDRANT BURYS. IF EXISTING FIRE HYDRANTS ARE LOCATED IN AN AREA WITHOUT CONCRETE, CONTRACTOR SHALL REMOVE AND REPLACE IN KIND AROUND ABANDONED FIRE HYDRANT BURYS. CONTRACTOR SHALL RESTORE LANDSCAPING AND EXISTING IMPROVEMENTS AROUND ABANDONED FIRE HYDRANTS. CONTRACTOR SHALL NOTIFY THE ORANGE COUNTY FIRE AUTHORITY OF THE LOCATION OF THE FIRE HYDRANTS THAT ARE OUT OF SERVICE. HYDRANTS SHALL BE DELIVERED TO A LOCATION APPROVED BY THE ENGINEERING DIVISION.
14. AIR RELEASE VALVE ASSEMBLY, PER CITY OF SANTA ANA STD. PLAN 1415, SHALL BE INSTALLED AT HIGH POINTS OF WATER MAINS, OR AS DIRECTED BY THE ENGINEER.

NOTES TO CONTRACTOR

1. ALL BENDS 11 1/4° OR GREATER, TEES AND CROSSES SHALL BE DUCTILE IRON (CLASS 350) WITH PUSH-ON JOINTS UNLESS NOTED OTHERWISE. (B)
2. DO NOT EXCEED 80% OF MANUFACTURER'S RECOMMENDED DEFLECTION REQUIREMENTS FOR PIPE INSTALLATION.
3. A MINIMUM COVER OF 36" SHALL BE MAINTAINED OVER CENTERLINE OF ALL PIPELINES UNLESS NOTED OTHERWISE. A MINIMUM COVER OF 48" SHALL BE MAINTAINED OVER CENTERLINE OF ALL PIPELINES WHEN CROSSING PROPOSED TRACKS UNLESS NOTED OTHERWISE. (B)
4. A MINIMUM 12" CLEARANCE BETWEEN EXISTING UTILITIES AND PROPOSED PIPELINES SHALL BE MAINTAINED AT CROSSINGS UNLESS NOTED OTHERWISE.
5. CONTRACTOR SHALL VERIFY DEPTH, LOCATION AND DIMENSIONS OF EXISTING FACILITIES AND CONNECTION POINTS PRIOR TO CONSTRUCTION OF WATER MAINS.
6. ALL METALLIC FITTINGS, VALVES AND APPURTENANCES (INCLUDING VALVES, BOLTS, FLANGE JOINTS, JOINT HARNESSES, FLEXIBLE COUPLINGS, ETC.) SHALL BE COATED WITH WAX TAPE PER AWWA C217 AFTER ASSEMBLY. FLANGE COUPLING ADAPTERS MAY BE EPOXY COATED.
7. ALL COPPER TUBING SHALL BE PLACED IN 10-MIL POLYETHYLENE SLEEVES WITH BEDDING/BACKFILL OF A MINIMUM OF 2" THICK IMPORTED SAND (SE ≥ 30) PER DETAIL 1/WN11
8. ALL HORIZONTAL BENDS AND FITTINGS SHALL BE PLACED WITH THRUST BLOCKS PER CITY OF SANTA ANA STD. PLAN 1412. ALL VERTICAL BENDS SHALL BE PLACED WITH VERTICAL BEND ANCHOR BLOCKS PER CITY OF SANTA ANA STD. PLAN 1420.
9. THE CONTRACTOR SHALL CONTACT RICK BICKER OR TIM HATCH AT 714-577-5084 AT LEAST TWO (2) WORKING DAYS (MONDAY THROUGH THURSDAY) PRIOR TO STARTING ANY WORK IN THE VICINITY OF MWD FACILITIES.
10. CONTRACTOR TO REFERENCE UTILITY PLAN DRAWINGS CU01 TO CU29 FOR WATER SERVICE AND FIRE HYDRANT LATERAL RECONNECTIONS TO EXISTING WATER MAINS.
11. TO MEET COVERS NOTED IN PLANS, CONTRACTOR SHALL REFERENCE DETAIL 4/WN11. IF ADEQUATE SPACE IS NOT AVAILABLE, CONTRACTOR SHALL REFERENCE DETAIL 3/WN11 WITH INSPECTOR'S APPROVAL.
12. CONTRACTOR SHALL FILL EXISTING ABANDONED LINES LOCATED UNDERNEATH PROPOSED TRACK SLABS AND PLATFORMS WITH CLSM. (B)

WATER CONSTRUCTION NOTES

(125) CONSTRUCT 12" AWWA C900 (DR14) PVC PIPE AND DI FITTINGS PER THE CITY OF SANTA ANA STD. PLAN NOs. 1150 AND 1420.
(126) CONSTRUCT 10" AWWA C900 (DR14) PVC PIPE AND DI FITTINGS PER THE CITY OF SANTA ANA STD. PLAN NOs. 1150 AND 1420.
(127) CONSTRUCT 8" AWWA C900 (DR14) PVC PIPE AND DI FITTINGS PER THE CITY OF SANTA ANA STD. PLAN NOs. 1150 AND 1420.
(128) INSTALL 12" FLGxMJ GATE VALVE PER THE CITY OF SANTA ANA STD. PLAN NO. 1410
(129) INSTALL 12" MJ GATE VALVE WITH VALVE ANCHOR PER THE CITY OF SANTA ANA STD. PLAN NO. 1410 AND 1419
(130) INSTALL 8" FLGxMJ GATE VALVE PER THE CITY OF SANTA ANA STD. PLAN NO. 1410
(131) INSTALL 8" MJ GATE VALVE PER THE CITY OF SANTA ANA STD. PLAN NO. 1410
(132) INSTALL 12" DI 90° BEND AND THRUST BLOCK PER THE CITY OF SANTA ANA STD. PLAN NO. 1412.
(133) INSTALL 12" DI 45° BEND AND THRUST BLOCK PER THE CITY OF SANTA ANA STD. PLAN NO. 1412.
(134) INSTALL 12" DI 22-1/2° BEND AND THRUST BLOCK PER THE CITY OF SANTA ANA STD. PLAN NO. 1412.
(135) INSTALL 8" DI 90° BEND AND THRUST BLOCK PER THE CITY OF SANTA ANA STD. PLAN NO. 1412.
(136) INSTALL 8" DI 45° BEND AND THRUST BLOCK PER THE CITY OF SANTA ANA STD. PLAN NO. 1412.
(137) INSTALL 8" DI 22-1/2° BEND AND THRUST BLOCK PER THE CITY OF SANTA ANA STD. PLAN NO. 1412.
(138) INSTALL 12" DI TEE AND THRUST BLOCK PER THE CITY OF SANTA ANA STD. PLAN NO. 1412.
(139) INSTALL 12"x8" DI TEE AND THRUST BLOCK PER THE CITY OF SANTA ANA STD. PLAN NO. 1412.
(140) INSTALL 8" DI TEE AND THRUST BLOCK PER THE CITY OF SANTA ANA STD. PLAN NO. 1412.
(141) INSTALL 12" DI CROSS AND THRUST BLOCK PER THE CITY OF SANTA ANA STD. PLAN NO. 1412.
(142) INSTALL 12"x10" DI REDUCER
(143) INSTALL 12"x8" DI REDUCER
(144) INSTALL 12"x6" DI REDUCER
(145) CONSTRUCT 12" DI FLGxPO ADAPTER.
(146) CONSTRUCT 8" DI FLGxPO ADAPTER.
(147) REMOVE AND DISPOSE OF INTERFERING PORTIONS OF EXISTING PIPE AND VALVES. CONNECT AND TIE-IN TO EXISTING WATER MAIN PER DETAIL NOTED ON PLANS.
(148) CUT EXISTING WATERLINE, CAP AND ABANDON IN PLACE.
(149) ABANDON EXISTING WATER MAIN IN PLACE. REMOVE AND DISPOSE OF INTERFERING PORTIONS OF EXISTING WATER MAIN INCLUDING VALVES AND APPURTENANCES. REMOVE VALVES PER SANTA ANA STD. PLAN NO. 1430. IF THE EXISTING MAIN TO BE ABANDONED IS LOCATED UNDERNEATH PROPOSED TRACK SLABS OR PLATFORMS, CONTRACTOR SHALL FILL MAIN WITH CLSM. (B)
(150) CONTRACTOR SHALL FIELD VERIFY THE SIZE AND LOCATION OF ALL SERVICES PRIOR TO REPLACEMENT/RECONNECTION. CONNECT TO EXISTING WATER SERVICE PER DETAIL 7/WN11
(151) CONSTRUCT NEW WATER SERVICE FROM MAIN TO EXISTING WATER METER PER THE CITY OF SANTA ANA STD. PLAN NO. 1401 OR 1402 AND PER DETAIL 1/WN11
(152) CONSTRUCT NEW WATER SERVICE AND NEW METER PER THE CITY OF SANTA ANA STD. PLAN NO. 1401 OR 1402 AND PER DETAIL 1/WN11
(153) CONSTRUCT FIRE HYDRANT ASSEMBLY PER THE CITY OF SANTA ANA STD. PLAN NO. 1405.
(154) CONSTRUCT 2" COMBINATION AIR VALVE ASSEMBLY PER CITY OF SANTA ANA STD. PLAN NO. 1415
(155) CONSTRUCT 2" BLOWOFF ASSEMBLY PER CITY OF SANTA ANA STD. PLAN NO. 1414
(156) INSTALL ONE CONTINUOUS SECTION OF PVC PIPE, CENTERED UNDER OR OVER THE CROSSING UTILITY PIPELINE TO MEET DDW CRITERIA.
(157) REMOVE AND DISPOSE OF EXISTING VALVE, RISER, VALVE BOX FRAME AND COVER, BACKFILL WITH SAND, COMPACT, AND REPAVE.
(158) CUT INTO EXISTING STEEL CASING AND CONNECT TO EXISTING WATER MAIN PER DETAIL 5/WN10
(159) INSTALL PVC CASING PER DETAIL 2/WN11

WATER CONSTRUCTION NOTES (CONTINUED)

(160) INSTALL STEEL CASING PER DETAIL 2/WN11
(161) REMOVE AND SALVAGE EXISTING FIRE HYDRANT AND RETURN TO THE CITY OF SANTA ANA WATER RESOURCES DIVISION. REMOVE VALVE, VALVE BOX FRAME AND COVER PER SANTA ANA STD. PLAN NO. 1430.
(162) CONTRACTOR TO RELOCATE EXISTING FIRE DEPARTMENT CONNECTION. CONTRACTOR SHALL FIELD VERIFY SIZE AND LOCATION OF EXISTING ON-SITE FIRE SYSTEM CONNECTING THE FDC. ANY PORTIONS INTERFERING WITH THE PROPOSED WATER MAIN, FDC LATERAL, OR STREET CAR FACILITIES SHALL BE RE-ROUTED. INSTALL PIPING TO MATCH EXISTING SIZE AND MATERIAL. CONNECT AND TIE-IN TO EXISTING PIPING WITH TRANSITION COUPLING. CONTRACTOR TO COORDINATE WITH OCFA AND THE CITY OF SANTA ANA FOR RELOCATION.
(163) REMOVE EXISTING FIRE HYDRANT AND RELOCATE WITH NEW FIRE HYDRANT PER DETAIL NOTED ON PLANS.
(164) CONTRACTOR SHALL FIELD VERIFY THE SIZE AND LOCATION OF ALL SERVICES PRIOR TO REPLACEMENT/RECONNECTION. CONNECT TO EXISTING WATER SERVICES PER DETAIL 8/WN11
(165) CONTRACTOR SHALL FIELD VERIFY THE SIZE AND LOCATION OF ALL SERVICES PRIOR TO REPLACEMENT. REMOVE ANY INTERFERING PORTIONS OF EXISTING SERVICE. CONSTRUCT NEW WATER SERVICE AND NEW METER PER THE CITY OF SANTA ANA STD. PLAN NO. 1403 AND PER DETAIL 7/WN11
(B) (166) INSTALL 12" DI 22-1/2° BEND AND THRUST BLOCK PER THE CITY OF SANTA ANA STD. PLAN NO. 1412.

JOB SITE SAFETY

BY ACCEPTING THIS CONTRACT, CONTRACTOR HEREBY RELEASES AND AGREES TO INDEMNIFY, DEFEND, HOLD HARMLESS CITY OF SANTA ANA, OCTA, ENGINEER, THEIR PARENT AND SUBSIDIARY COMPANIES, AGENTS, EMPLOYEES, CONSULTANTS AND REPRESENTATIVES FOR ANY AND ALL DAMAGE TO PERSONS OR PROPERTY OR WRONGFUL DEATH REGARDLESS OF WHETHER OR NOT SUCH CLAIM, DAMAGE, LOSS OR EXPENSE IS CAUSED IN WHOLE OR IN PART BY THE NEGLIGENCE, ACTIVE OR PASSIVE, OF CITY OF SANTA ANA, ENGINEER, THEIR PARENT AND SUBSIDIARY COMPANIES, AS AS WELL AS THEIR AGENTS AND EMPLOYEES, EXCEPTING ONLY THE SOLE NEGLIGENCE OF CITY OF SANTA ANA, ENGINEER, THEIR PARENT AND SUBSIDIARY COMPANIES AND THEIR AGENTS AND EMPLOYEES TO THE FULLEST EXTENT PERMITTED BY LAW. SUCH INDEMNIFICATION SHALL EXTEND TO ALL CLAIMS, DEMANDS, ACTIONS, OR LIABILITY FOR INJURIES, DEATH OR DAMAGES OCCURRING AFTER COMPLETION OF PROJECT, AS WELL AS DURING THE WORK'S PROGRESS. CONTRACTOR FURTHER AGREES THAT IT SHALL ACCOMPLISH THE ABOVE AT ITS OWN COST, EXPENSE AND RISK EXCLUSIVE OF AND REGARDLESS OF ANY APPLICABLE INSURANCE POLICY OR POSITION TAKEN BY ANY INSURANCE COMPANY REGARDING COVERAGE.

ENGINEER'S NOTICE TO CONTRACTOR

THE EXISTENCE AND LOCATION OF ANY UNDERGROUND UTILITIES OR STRUCTURES SHOWN ON THESE PLANS ARE OBTAINED BY A SEARCH OF AVAILABLE RECORDS. TO THE BEST OF OUR KNOWLEDGE THERE ARE NO EXISTING UTILITIES EXCEPT THOSE SHOWN ON THIS PLAN. THE CONTRACTOR IS REQUIRED TO TAKE ALL PRECAUTIONARY MEASURES TO PROTECT THE UTILITIES SHOWN, AND ANY OTHER LINES OR STRUCTURES NOT SHOWN ON THESE PLANS, AND IS RESPONSIBLE FOR THE PROTECTION OF, AND ANY DAMAGE TO THOSE LINES OR STRUCTURES. CONTRACTOR SHALL VERIFY THE LOCATIONS OF ALL UTILITIES SHOWN ON THE DRAWINGS.

CONTRACTOR SHALL DEFEND, INDEMNIFY AND HOLD THE OWNER (CITY OF SANTA ANA), OCTA, HNTB, AND PSOMAS, ITS EMPLOYEES, OFFICERS, OR AGENTS, HARMLESS AGAINST ANY AND ALL CLAIMS BY ANY PARTIES ARISING FROM, OR RELATED TO, ANY AND ALL DAMAGES, INCLUDING LEGAL COSTS AND ATTORNEY'S FEES, RESULTING FROM INTERFERENCE WITH, INTERRUPTION OF, DAMAGE TO, OR ANY AND ALL INJURIES WHICH RESULT FROM DAMAGE CAUSED TO SUBSURFACE INSTALLATIONS AS DEFINED IN GOVERNMENT CODE 4216.1 (J), WHICH IS UNFORESEEN AND DESPITE ENGINEER'S EFFORT DURING THE DESIGN PROCESS WAS NOT LOCATED, EXCEPTING ONLY THE GROSS NEGLIGENCE OR WILLFUL MISCONDUCT OF ENGINEER IN PROVIDING ITS SERVICES.

STANDARD SYMBOLS

- PROPOSED WATER LINE - SIZE AS INDICATED
- PROPOSED PIPE ENCASEMENT - TYPE AS INDICATED
- PROPOSED WATER VALVE
- PROPOSED WATER LINE SHOWN ON NOTED SHEET
- PROPOSED FIRE HYDRANT (F.H.)
- PROPOSED WATER SERVICE RECONNECTION
- AV — PROPOSED AIR RELEASE AND VACUUM RELIEF VALVE
- BO — PROPOSED BLOWOFF ASSEMBLY

CITY OF SANTA ANA GENERAL NOTES

1. CONSTRUCTION AND INSTALLATION OF ALL WATER MAINS AND APPURTENANCES SHALL BE IN ACCORDANCE WITH THE CITY OF SANTA ANA STANDARD PLANS AND SPECIFICATIONS. WHERE THE STANDARD PLANS ARE SILENT, CONSTRUCTION AND INSTALLATION OF WATER MAINS AND APPURTENANCES SHALL CONFORM TO THE AMERICAN WATER WORKS ASSOCIATION (AWWA) SPECIFICATIONS AND THE AMERICAN PUBLIC WORKS ASSOCIATION (APWA) SPECIFICATIONS.
2. CONSTRUCTION OF WATER MAINS AND APPURTENANCES SHALL ONLY BE PERFORMED BY QUALIFIED CONTRACTORS WITH A VALID CALIFORNIA CONTRACTOR A OR C34 LICENSE.
3. NO PERSON, OTHER THAN CITY OF SANTA ANA WATER RESOURCES DIVISION STAFF CERTIFIED BY THE STATE OF CALIFORNIA AS A WATER DISTRIBUTION OPERATOR, SHALL BE ALLOWED TO OPERATE THE CITY'S WATER SYSTEM VALVES.
4. NO PERSON, OTHER THAN CITY OF SANTA ANA WATER RESOURCES DIVISION STAFF CERTIFIED BY THE STATE OF CALIFORNIA AS A WATER DISTRIBUTION OPERATOR, SHALL SHUT WATER SERVICE OFF TO ANY CUSTOMER.
5. ALL NEWLY CONSTRUCTED WATER MAINS AND APPURTENANCES SHALL BE DISINFECTED AND TESTED IN ACCORDANCE WITH AMERICAN WATER WORKS ASSOCIATION SPECIFICATIONS, SECTION C600'S, PRIOR TO CONNECTION TO THE CITY'S WATER DISTRIBUTION SYSTEM. DISINFECTION TESTING RESULTS SHALL BE SUBMITTED TO THE WATER RESOURCES DIVISION WHEN REQUIRED FOR REVIEW AND APPROVAL PRIOR TO CONNECTING TO THE CITY'S WATER DISTRIBUTION SYSTEM.
6. WATER MAINS WILL BE HYDROSTATIC TESTED AT 200 PSI FOR 2 HOURS.
7. REQUESTS TO SHUT-DOWN THE WATER DISTRIBUTION SYSTEM FOR TIE-INS OR OTHER PURPOSES SHALL BE COORDINATED WITH THE WATER RESOURCES DIVISION STAFF AT LEAST 2 WEEKS IN ADVANCE AT (714) 647-3320. ALL CUSTOMERS AFFECTED BY THE PROPOSED SHUT DOWN SHALL BE NOTICED 48 HOURS IN ADVANCE BY THE CONTRACTOR.
8. THE CITY OF SANTA ANA WATER RESOURCES DIVISION CANNOT GUARANTEE A COMPLETE SHUTDOWN OF EXISTING MAINS. THE CONTRACTOR SHALL BE RESPONSIBLE FOR DEWATERING AND ISOLATION OF CONSTRUCTION FOR TESTING OR ANY OTHER PURPOSES. CONTRACTOR IS RESPONSIBLE FOR GETTING THE AIR OUT OF THE WATER LINE BY METHOD APPROVED BY WATER RESOURCES DIVISION.
9. ALL FIRE HYDRANTS WHICH ARE OUT OF SERVICE OR NEW FIRE HYDRANTS WHICH HAVE NOT BEEN ACCEPTED FOR SERVICE SHALL BE COVERED WITH A SACK INDICATING THAT THE HYDRANTS ARE NOT IN SERVICE.
10. MAINTAINING WATER SERVICE SHALL BE THE RESPONSIBILITY OF THE CONTRACTOR. METHOD OF PROVIDING TEMPORARY SERVICE MUST BE APPROVED BY THE WATER RESOURCES DIVISION. THE WATER SHALL BE SAFE FOR DRINKING IN ACCORDANCE WITH STATE OF CALIFORNIA WATER RESOURCES CONTROL BOARD (SWRCB) DRINKING WATER PROGRAM (DWP).
11. WATER METERS WILL NOT BE INSTALLED NOR WATER TURNED ON UNTIL THE BACKFLOW DEVICES REQUIRED FOR THE BUILDING AND IRRIGATION SYSTEMS HAVE BEEN INSTALLED, TESTED, APPROVED, AND CERTIFIED. CONTACT WATER RESOURCES DIVISION AT (714) 647-3320.
12. ALL WATER MAINS SHALL BE AWWA C-900 PVC, CLASS 200 PIPE OR AWWA C-151 DUCTILE IRON PIPE. ALL OTHER PIPE MATERIALS REQUIRE SPECIAL REVIEW AND APPROVAL FROM THE WATER RESOURCES DIVISION.
13. WATER MAINS SHALL HAVE 36" MINIMUM COVER TO FINISHED GRADE.
14. CONTRACTOR TO VERIFY DEPTH AND LOCATION OF ALL UTILITIES PRIOR TO TRENCHING.
15. PRIVATE WATER APPURTENANCES SUCH AS BACKFLOW PREVENTERS, FIRE HYDRANTS AND STANDPIPES, AND VALVES SHALL BE PAINTED AS FOLLOWS:
    A. DOMESTIC WATER: BLUE
    B. POTABLE IRRIGATION GREEN
    C. RECYCLED IRRIGATION PURPLE
    D. FIRE PROTECTION OSHA SAFETY RED
16. DO NOT CUT OR MILL ASBESTOS CEMENT PIPE. WHERE JOINING EXISTING ASBESTOS CEMENT PIPE, REMOVE ENTIRE PIPE SEGMENT TO NEAREST JOINT OR SNAP ACP WITH SNAP CUTTER AND JOIN TO NEW PIPE WITH A PROPERLY DIMENSIONED ADAPTER.
17. DO NOT TAP EXISTING MAINS WITHOUT THE PRESENCE OF A CERTIFIED WATER INSPECTOR. PRESSURE TEST TAPPING SLEEVE IN THE PRESENCE OF CERTIFIED WATER INSPECTOR BEFORE TAPPING EXISTING MAIN.
18. FINAL ACCEPTANCE WILL NOT OCCUR UNTIL ORIGINAL RECORD DRAWINGS ON MYLAR AND DIGITAL FILES ARE DELIVERED TO AND ACCEPTED BY THE CITY'S INSPECTOR. SHOW ALL FIELD CHANGES ON RECORD DRAWINGS.
19. TRENCH PLATES SHALL BE FLUSH WITH PAVEMENT.
20. WHEN PUBLIC WATER FACILITIES ARE LOCATED ON PRIVATE PROPERTY, EASEMENT DOCUMENTS ARE TO BE SUBMITTED TO CITY FOR APPROVAL PRIOR TO A PERMIT BEING ISSUED.
21. ALL RECYCLED WATER PROJECTS REQUIRE REVIEW AND APPROVAL BY THE WATER RESOURCES DIVISION.
22. WATER SYSTEM HARDWARE AND APPURTENANCES REMOVED FROM THE FIELD SHALL BE RETURNED AND DELIVERED TO THE CITY WATER RESOURCES DIVISION YARD LOCATED AT 215 S. CENTER STREET. PRIOR NOTIFICATION OF DELIVERY IS REQUIRED AT (714) 647-3320.

Underground Service Alert
of Southern California
811
CALL: **TOLL FREE 1-800-422-4133**
TWO WORKING DAYS BEFORE YOU DIG

NOTICE TO CONTRACTOR

PURSUANT TO ASSEMBLY BILL 3019 NO EXCAVATION PERMIT IS VALID UNLESS THE CONTRACTOR CONTACTS AND OBTAINS AN INQUIRY I.D. NUMBER FROM "UNDER-GROUND SERVICE ALERT" (1-800-422-4133) AT LEAST TWO WORKING DAYS PRIOR TO COMMENCING EXCAVATION.

CITY OF SANTA ANA PROJECT NO. 17-6766-C: OC STREETCAR FROM HARBOR BLVD TO SARTC

M:\2HNT010400\Public_Works\Sheets__watr-Addendum\SHT-WG02-62481-R0B.dwg 02/27/18 8:42am
SHT-WG02-62481-R0B.DWG

FILE NO.:

REVISIONS

NUMBER	DATE	INITIALS	DESCRIPTION	APPROVED	INSTALLED
A	12/2017		ISSUE FOR BID		
B	03/08/18	NAG	NOTE REVISIONS		

REFERENCES

BENCHMARK NO.: 3B-98-85 (PT. 400) ELEV.: 140.19 (NAVD 88)

FOUND 3.75" OCS ALUMINUM BENCHMARK DISK STAMPED "3B-98-5", SET IN THE NORTHWESTERLY CORNER OF A 4 FT. BY 8 FT. CONCRETE CATCH BASIN. MONUMENT IS LOCATED IN THE SOUTHEASTERLY CORNER OF THE INTERSECTION OF FRUIT STREET AND THE ATCHINSON TOPEKA AND SANTA FE RAILROAD, 23 FT. EASTERLY OF THE CENTERLINE OF THE RAILWAY, 19.5 FT. SOUTHERLY OF THE CENTERLINE OF FRUIT STREET AND 14.3 FT. WEST OF A POWER POLE (#716815E"). ORANGE COUNTY SURVEYS, PUBLIC WORKS.

REGISTERED PROFESSIONAL ENGINEER NEHA A. GAJJAR No. C55574 Exp. 12-31-18 CIVIL STATE OF CALIFORNIA

HNTB
The HNTB Companies
Infrastructure Solutions
200 E. Sandpointe Ave., Ste. 200
Santa Ana, CA 92707
Phone: 714-460-1600

PSOMAS
3 HUTTON CENTRE DRIVE, SUITE 200
SANTA ANA, CA 92707
(714) 751-7373 WWW.PSOMAS.COM

PREPARED UNDER THE SUPERVISION OF: NEHA GAJJAR — DATE
RCE NO.: 55574 — 12/2018
DESIGNED: MATTHEW VERA DRAWN: MATTHEW VERA CHECKED: NEHA GAJJAR — 10/2017

PUBLIC WORKS DEPARTMENT Garden Grove Youth & Ambition FOUNDED 1874 & INC. 1956

OCTA

DOWNTOWN ORANGE COUNTY SANTA ANA 1869

WG02

WATER IMPROVEMENT PLANS
OC STREETCAR
GENERAL NOTES, NOTES TO CONTRACTOR, WATER CONSTRUCTION NOTES, JOB SITE SAFETY, PRIVATE ENGINEER'S NOTICE TO CONTRACTOR AND STANDARD SYMBOLS
ORANGE COUNTY TRANSPORTATION AUTHORITY

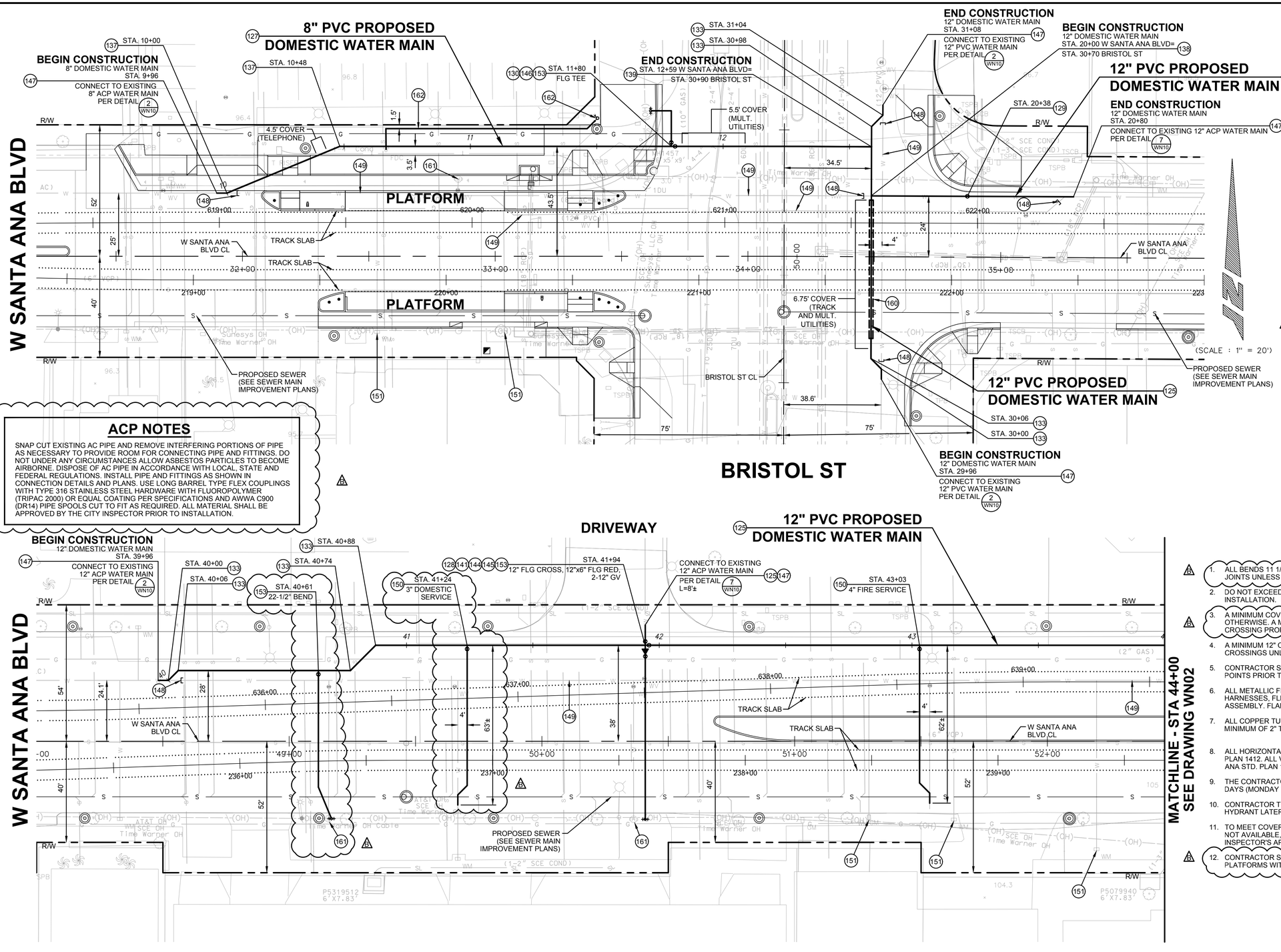

ACP NOTES

SNAP CUT EXISTING AC PIPE AND REMOVE INTERFERING PORTIONS OF PIPE AS NECESSARY TO PROVIDE ROOM FOR CONNECTING PIPE AND FITTINGS. DO NOT UNDER ANY CIRCUMSTANCES ALLOW ASBESTOS PARTICLES TO BECOME AIRBORNE. DISPOSE OF AC PIPE IN ACCORDANCE WITH LOCAL, STATE AND FEDERAL REGULATIONS. INSTALL PIPE AND FITTINGS AS SHOWN IN CONNECTION DETAILS AND PLANS. USE LONG BARREL TYPE FLEX COUPLINGS WITH TYPE 316 STAINLESS STEEL HARDWARE WITH FLUOROPOLYMER (TRIPAC 2000) OR EQUAL COATING PER SPECIFICATIONS AND AWWA C900 (DR14) PIPE SPOOLS CUT TO FIT AS REQUIRED. ALL MATERIAL SHALL BE APPROVED BY THE CITY INSPECTOR PRIOR TO INSTALLATION.

WATER CONSTRUCTION NOTES

125 CONSTRUCT 12" AWWA C900 (DR14) PVC PIPE AND DI FITTINGS PER THE CITY OF SANTA ANA STD. PLAN NOs. 1150 AND 1420.

127 CONSTRUCT 8" AWWA C900 (DR14) PVC PIPE AND DI FITTINGS PER THE CITY OF SANTA ANA STD. PLAN NOs. 1150 AND 1420

128 INSTALL 12" FLG x MJ GATE VALVE PER THE CITY OF SANTA ANA STD. PLAN NO. 1410

129 INSTALL 12" MJ GATE VALVE WITH VALVE ANCHOR PER THE CITY OF SANTA ANA STD. PLAN NO. 1410 AND 1419

130 INSTALL 8" FLGxMJ GATE VALVE PER THE CITY OF SANTA ANA STD. PLAN NO. 1410

133 INSTALL 12" DI 45° BEND AND THRUST BLOCK PER THE CITY OF SANTA ANA STD. PLAN NO. 1412.

137 INSTALL 8" DI 22-1/2° BEND AND THRUST BLOCK PER THE CITY OF SANTA ANA STD. PLAN NO. 1412.

138 INSTALL 12" DI TEE AND THRUST BLOCK PER THE CITY OF SANTA ANA STD. PLAN NO. 1412.

139 INSTALL 12"x8" DI TEE AND THRUST BLOCK PER THE CITY OF SANTA ANA STD. PLAN NO. 1412.

141 INSTALL 12" DI CROSS AND THRUST BLOCK PER THE CITY OF SANTA ANA STD. PLAN NO. 1412.

144 INSTALL 12"x6" DI REDUCER

145 CONSTRUCT 12" DI FLGxPO ADAPTER.

146 CONSTRUCT 8" DI FLGxPO ADAPTER.

147 REMOVE AND DISPOSE OF INTERFERING PORTIONS OF EXISTING PIPE AND VALVES. CONNECT AND TIE-IN TO EXISTING WATER MAIN PER DETAIL NOTED ON PLANS.

148 CUT EXISTING WATERLINE, CAP AND ABANDON IN PLACE.

149 ABANDON EXISTING WATER MAIN IN PLACE. REMOVE AND DISPOSE OF INTERFERING PORTIONS OF EXISTING WATER MAIN INCLUDING VALVES AND APPURTENANCES. REMOVE VALVES PER SANTA ANA STD. PLAN NO. 1430. IF THE EXISTING MAIN TO BE ABANDONED IS LOCATED UNDERNEATH PROPOSED TRACK SLABS OR PLATFORMS, CONTRACTOR SHALL FILL MAIN WITH CLSM.

150 CONTRACTOR SHALL FIELD VERIFY THE SIZE AND LOCATION OF ALL SERVICES PRIOR TO REPLACEMENT/RECONNECTION. CONNECT TO EXISTING WATER SERVICE PER DETAIL 7 WN11

151 CONSTRUCT NEW WATER SERVICE FROM MAIN TO EXISTING WATER METER PER THE CITY OF SANTA ANA STD. PLAN NO. 1401 OR 1402 AND PER DETAIL 1 WN11

153 CONSTRUCT FIRE HYDRANT ASSEMBLY PER THE CITY OF SANTA ANA STD. PLAN NO. 1405.

160 INSTALL STEEL CASING PER DETAIL 2 WN11

161 REMOVE AND SALVAGE EXISTING FIRE HYDRANT AND RETURN TO THE CITY OF SANTA ANA WATER RESOURCES DIVISION. REMOVE VALVE, VALVE BOX FRAME AND COVER PER SANTA ANA STD. PLAN NO. 1430.

162 CONTRACTOR TO RELOCATE EXISTING FIRE DEPARTMENT CONNECTION. CONTRACTOR SHALL FIELD VERIFY SIZE AND LOCATION OF EXISTING ON-SITE FIRE SYSTEM CONNECTING THE FDC. ANY PORTIONS INTERFERING WITH THE PROPOSED WATER MAIN, FDC LATERAL, OR STREET CAR FACILITIES SHALL BE RE-ROUTED. INSTALL PIPING TO MATCH EXISTING SIZE AND MATERIAL. CONNECT AND TIE-IN TO EXISTING PIPING WITH TRANSITION COUPLING. CONTRACTOR TO COORDINATE WITH OCFA AND THE CITY OF SANTA ANA FOR RELOCATION.

NOTES TO CONTRACTOR

A 1. ALL BENDS 11 1/4° OR GREATER, TEES AND CROSSES SHALL BE DUCTILE IRON (CLASS 350) WITH PUSH-ON JOINTS UNLESS NOTED OTHERWISE.

2. DO NOT EXCEED 80% OF MANUFACTURER'S RECOMMENDED DEFLECTION REQUIREMENTS FOR PIPE INSTALLATION.

A 3. A MINIMUM COVER OF 36" SHALL BE MAINTAINED OVER CENTERLINE OF ALL PIPELINES UNLESS NOTED OTHERWISE. A MINIMUM COVER OF 48" SHALL BE MAINTAINED OVER CENTERLINE OF ALL PIPELINES WHEN CROSSING PROPOSED TRACKS UNLESS NOTED OTHERWISE.

4. A MINIMUM 12" CLEARANCE BETWEEN EXISTING UTILITIES AND PROPOSED PIPELINES SHALL BE MAINTAINED AT CROSSINGS UNLESS NOTED OTHERWISE.

5. CONTRACTOR SHALL VERIFY DEPTH, LOCATION AND DIMENSIONS OF EXISTING FACILITIES AND CONNECTION POINTS PRIOR TO CONSTRUCTION OF WATER MAINS.

6. ALL METALLIC FITTINGS, VALVES AND APPURTENANCES (INCLUDING VALVES, BOLTS, FLANGE JOINTS, JOINT HARNESSES, FLEXIBLE COUPLINGS, ETC.) SHALL BE COATED WITH WAX TAPE PER AWWA C217 AFTER ASSEMBLY. FLANGE COUPLING ADAPTERS MAY BE EPOXY COATED.

7. ALL COPPER TUBING SHALL BE PLACED IN 10-MIL POLYETHYLENE SLEEVES WITH BEDDING/BACKFILL OF A MINIMUM OF 2" THICK IMPORTED SAND (SE ≥ 30) PER DETAIL 1 WN11

8. ALL HORIZONTAL BENDS AND FITTINGS SHALL BE PLACED WITH THRUST BLOCKS PER CITY OF SANTA ANA STD. PLAN 1412. ALL VERTICAL BENDS SHALL BE PLACED WITH VERTICAL BEND ANCHOR BLOCKS PER CITY OF SANTA ANA STD. PLAN 1420.

9. THE CONTRACTOR SHALL CONTACT RICK BICKER OR TIM HATCH AT 714-577-5084 AT LEAST TWO (2) WORKING DAYS (MONDAY THROUGH THURSDAY) PRIOR TO STARTING ANY WORK IN THE VICINITY OF MWD FACILITIES.

10. CONTRACTOR TO REFERENCE UTILITY PLAN DRAWINGS CU01 TO CU29 FOR WATER SERVICE AND FIRE HYDRANT LATERAL RECONNECTIONS TO EXISTING WATER MAINS.

11. TO MEET COVERS NOTED IN PLANS, CONTRACTOR SHALL REFERENCE DETAIL 4 WN11. IF ADEQUATE SPACE IS NOT AVAILABLE, CONTRACTOR SHALL REFERENCE DETAIL 3 WN11 WITH INSPECTOR'S APPROVAL.

A 12. CONTRACTOR SHALL FILL EXISTING ABANDONED LINES LOCATED UNDERNEATH PROPOSED TRACK SLABS AND PLATFORMS WITH CLSM.

MATCHLINE - STA 44+00 SEE DRAWING WN02

Underground Service Alert of Southern California
811 CALL: TOLL FREE 1-800-422-4133
TWO WORKING DAYS BEFORE YOU DIG

NOTICE TO CONTRACTOR

PURSUANT TO ASSEMBLY BILL 3019 NO EXCAVATION PERMIT IS VALID UNLESS THE CONTRACTOR CONTACTS AND OBTAINS AN INQUIRY I.D. NUMBER FROM "UNDERGROUND SERVICE ALERT" (1-800-422-4133) AT LEAST TWO WORKING DAYS PRIOR TO COMMENCING EXCAVATION.

CITY OF SANTA ANA PROJECT NO. 17-6766-C: OC STREETCAR FROM HARBOR BLVD TO SARTC

FILE NO.:

SHT-WN01-62481-ROB.DWG

M:\2WNT01\0400\Public_Works\Sheets_wstr-Addendum\SHT-WN01-62481-ROB.dwg 02/27/18 8:43am

REVISIONS

NUMBER	DATE	INITIALS	DESCRIPTION	APPROVED	INSTALLED
A	12/2017		ISSUE FOR BID		
B	03/08/18	NAG	PLAN AND NOTE REVISIONS		
			"SHEET" CHANGED TO "DRAWING"		

REFERENCES

BENCHMARK NO.: 3B-98-85 (PT. 400) ELEV.: 140.19 (NAVD 88)

FOUND 3.75" OCS ALUMINUM BENCHMARK DISK STAMPED "3B-98-5", SET IN THE NORTHWESTERLY CORNER OF A 4 FT. BY 8 FT. CONCRETE CATCH BASIN. MONUMENT IS LOCATED IN THE SOUTHEASTERLY CORNER OF THE INTERSECTION OF FRUIT STREET AND THE ATCHINSON TOPEKA AND SANTA FE RAILROAD, 23 FT. EASTERLY OF THE CENTERLINE OF THE RAILWAY, 19.5 FT. SOUTHERLY OF THE CENTERLINE OF FRUIT STREET AND 14.3 FT. WEST OF A POWER POLE (#716815E"). ORANGE COUNTY SURVEYS, PUBLIC WORKS.

REGISTERED PROFESSIONAL ENGINEER NEHA A. GAJJAR No. 55574 Exp. 12-31-18 CIVIL STATE OF CALIFORNIA

HNTB
The HNTB Companies Infrastructure Solutions
200 E. Sandpointe Ave., Ste. 200
Santa Ana, CA 92707
Phone: 714-460-1600

PSOMAS
3 HUTTON CENTRE DRIVE, SUITE 200
SANTA ANA, CA 92707
(714) 751-7373 WWW.PSOMAS.COM

PREPARED UNDER THE SUPERVISION OF: NEHA GAJJAR		DATE
	RCE NO.: 55574	12/2018
DESIGNED: MATTHEW VERA DRAWN: MATTHEW VERA	CHECKED: NEHA GAJJAR	10/2017

WATER IMPROVEMENT PLANS

OC STREETCAR

SANTA ANA BLVD STA: 09+96 TO 12+59, 20+00 TO 20+80 AND 39+96 TO 44+00
BRISTOL STREET STA: 29+96 TO 31+08

ORANGE COUNTY TRANSPORTATION AUTHORITY

WN01

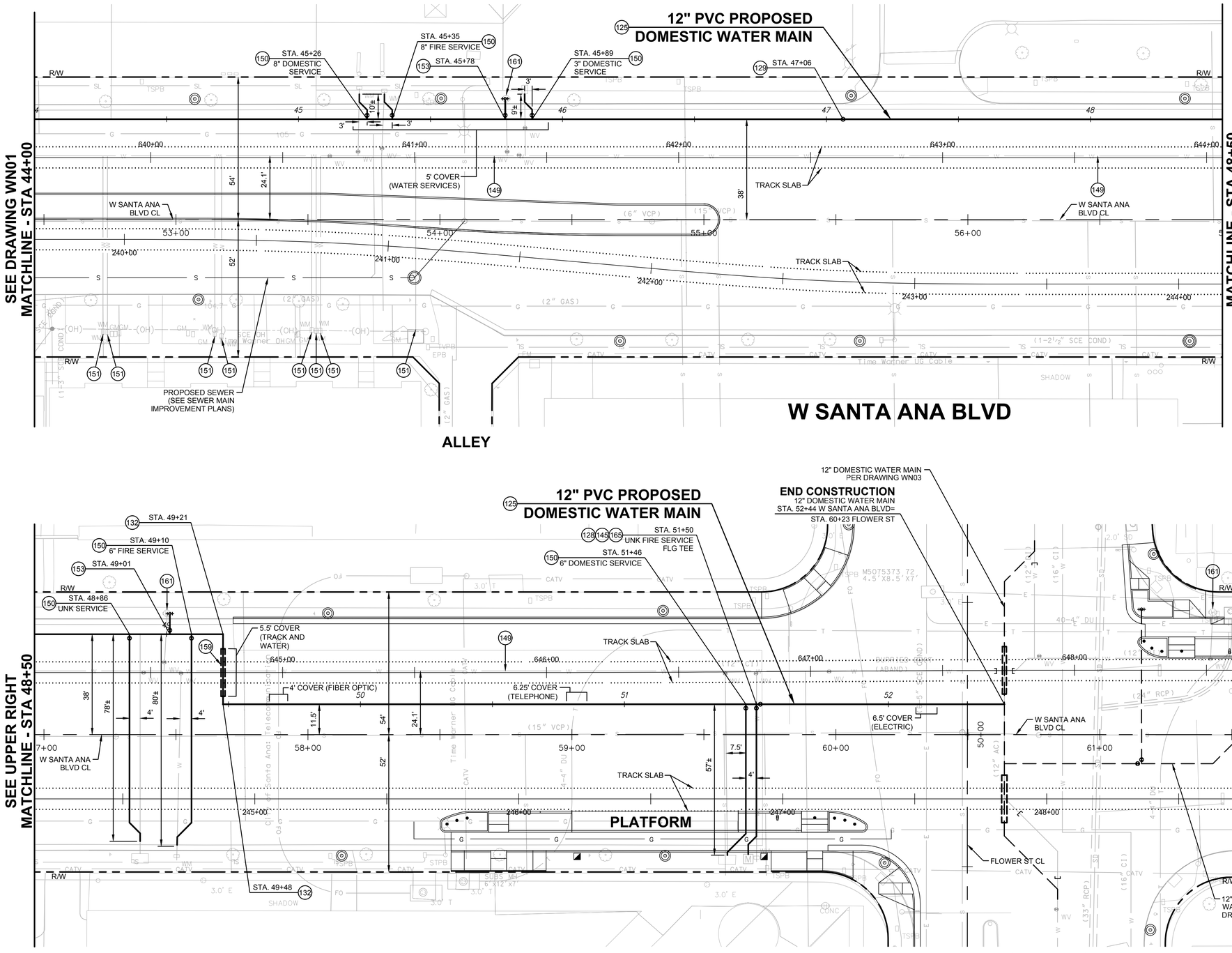

(SCALE : 1" = 20')

WATER CONSTRUCTION NOTES

125 CONSTRUCT 12" AWWA C900 (DR14) PVC PIPE AND DI FITTINGS PER THE CITY OF SANTA ANA STD. PLAN NOs. 1150 AND 1420.

126 INSTALL 12" FLGxMJ GATE VALVE PER THE CITY OF SANTA ANA STD. PLAN NO. 1410

129 INSTALL 12" MJ GATE VALVE WITH VALVE ANCHOR PER THE CITY OF SANTA ANA STD. PLAN NO. 1410 AND 1419

132 INSTALL 12" DI 90° BEND AND THRUST BLOCK PER THE CITY OF SANTA ANA STD. PLAN NO. 1412.

145 CONSTRUCT 12" DI FLGxPO ADAPTER.

△B 149 ABANDON EXISTING WATER MAIN IN PLACE. REMOVE AND DISPOSE OF INTERFERING PORTIONS OF EXISTING WATER MAIN INCLUDING VALVES AND APPURTENANCES. REMOVE VALVES PER SANTA ANA STD. PLAN NO. 1430. IF THE EXISTING MAIN TO BE ABANDONED IS LOCATED UNDERNEATH PROPOSED TRACK SLABS OR PLATFORMS, CONTRACTOR SHALL FILL MAIN WITH CLSM.

150 CONTRACTOR SHALL FIELD VERIFY THE SIZE AND LOCATION OF ALL SERVICES PRIOR TO REPLACEMENT/RECONNECTION. CONNECT TO EXISTING WATER SERVICE PER DETAIL 7/WN11

151 CONSTRUCT NEW WATER SERVICE FROM MAIN TO EXISTING WATER METER PER THE CITY OF SANTA ANA STD. PLAN NO. 1401 OR 1402 AND PER DETAIL 1/WN11

152 CONSTRUCT NEW WATER SERVICE AND NEW METER PER THE CITY OF SANTA ANA STD. PLAN NO. 1401 OR 1402 AND PER DETAIL 1/WN11

153 CONSTRUCT FIRE HYDRANT ASSEMBLY PER THE CITY OF SANTA ANA STD. PLAN NO. 1405.

156 INSTALL PVC CASING PER DETAIL 2/WN11

161 REMOVE AND SALVAGE EXISTING FIRE HYDRANT AND RETURN TO THE CITY OF SANTA ANA WATER RESOURCES DIVISION. REMOVE VALVE, VALVE BOX FRAME AND COVER PER SANTA ANA STD. PLAN NO. 1430.

165 CONTRACTOR SHALL FIELD VERIFY THE SIZE AND LOCATION OF ALL SERVICES PRIOR TO REPLACEMENT. REMOVE ANY INTERFERING PORTIONS OF EXISTING SERVICE. CONSTRUCT NEW WATER SERVICE AND NEW METER PER THE CITY OF SANTA ANA STD. PLAN NO. 1403 AND PER DETAIL 7/WN11

ACP NOTES

△B SNAP CUT EXISTING AC PIPE AND REMOVE INTERFERING PORTIONS OF PIPE AS NECESSARY TO PROVIDE ROOM FOR CONNECTING PIPE AND FITTINGS. DO NOT UNDER ANY CIRCUMSTANCES ALLOW ASBESTOS PARTICLES TO BECOME AIRBORNE. DISPOSE OF AC PIPE IN ACCORDANCE WITH LOCAL, STATE AND FEDERAL REGULATIONS. INSTALL PIPE AND FITTINGS AS SHOWN IN CONNECTION DETAILS AND PLANS. USE LONG BARREL TYPE FLEX COUPLINGS WITH TYPE 316 STAINLESS STEEL HARDWARE WITH FLUOROPOLYMER (TRIPAC 2000) OR EQUAL COATING PER SPECIFICATIONS AND AWWA C900 (DR14) PIPE SPOOLS CUT TO FIT AS REQUIRED. ALL MATERIAL SHALL BE APPROVED BY THE CITY INSPECTOR PRIOR TO INSTALLATION.

NOTES TO CONTRACTOR

△A 1. ALL BENDS 11 1/4° OR GREATER, TEES AND CROSSES SHALL BE DUCTILE IRON (CLASS 350) WITH PUSH-ON JOINTS UNLESS NOTED OTHERWISE.

2. DO NOT EXCEED 80% OF MANUFACTURER'S RECOMMENDED DEFLECTION REQUIREMENTS FOR PIPE INSTALLATION.

△B 3. A MINIMUM COVER OF 36" SHALL BE MAINTAINED OVER CENTERLINE OF ALL PIPELINES UNLESS NOTED OTHERWISE. A MINIMUM COVER OF 48" SHALL BE MAINTAINED OVER CENTERLINE OF ALL PIPELINES WHEN CROSSING PROPOSED TRACKS UNLESS NOTED OTHERWISE.

4. A MINIMUM 12" CLEARANCE BETWEEN EXISTING UTILITIES AND PROPOSED PIPELINES SHALL BE MAINTAINED AT CROSSINGS UNLESS NOTED OTHERWISE.

5. CONTRACTOR SHALL VERIFY DEPTH, LOCATION AND DIMENSIONS OF EXISTING FACILITIES AND CONNECTION POINTS PRIOR TO CONSTRUCTION OF WATER MAINS.

6. ALL METALLIC FITTINGS, VALVES AND APPURTENANCES (INCLUDING VALVES, BOLTS, FLANGE JOINTS, JOINT HARNESSES, FLEXIBLE COUPLINGS, ETC.) SHALL BE COATED WITH WAX TAPE PER AWWA C217 AFTER ASSEMBLY. FLANGE COUPLING ADAPTERS MAY BE EPOXY COATED.

7. ALL COPPER TUBING SHALL BE PLACED IN 10-MIL POLYETHYLENE SLEEVES WITH BEDDING/BACKFILL OF A MINIMUM OF 2" THICK IMPORTED SAND (SE ≥ 30) PER DETAIL 1/WN11

8. ALL HORIZONTAL BENDS AND FITTINGS SHALL BE PLACED WITH THRUST BLOCKS PER CITY OF SANTA ANA STD. PLAN 1412. ALL VERTICAL BENDS SHALL BE PLACED WITH VERTICAL BEND ANCHOR BLOCKS PER CITY OF SANTA ANA STD. PLAN 1420.

9. THE CONTRACTOR SHALL CONTACT RICK BICKER OR TIM HATCH AT 714-577-5084 AT LEAST TWO (2) WORKING DAYS (MONDAY THROUGH THURSDAY) PRIOR TO STARTING ANY WORK IN THE VICINITY OF MWD FACILITIES.

10. CONTRACTOR TO REFERENCE UTILITY PLAN DRAWINGS CU01 TO CU29 FOR WATER SERVICE AND FIRE HYDRANT LATERAL RECONNECTIONS TO EXISTING WATER MAINS.

11. TO MEET COVERS NOTED IN PLANS, CONTRACTOR SHALL REFERENCE DETAIL 4/WN11. IF ADEQUATE SPACE IS NOT AVAILABLE, CONTRACTOR SHALL REFERENCE DETAIL 3/WN11 WITH INSPECTOR'S APPROVAL.

△A 12. CONTRACTOR SHALL FILL EXISTING ABANDONED LINES LOCATED UNDERNEATH PROPOSED TRACK SLABS AND PLATFORMS WITH CLSM.

Underground Service Alert
of Southern California
811 CALL: **TOLL FREE 1-800-422-4133**
TWO WORKING DAYS
BEFORE YOU DIG

NOTICE TO CONTRACTOR

PURSUANT TO ASSEMBLY BILL 3019 NO EXCAVATION PERMIT IS VALID UNLESS THE CONTRACTOR CONTACTS AND OBTAINS AN INQUIRY I.D. NUMBER FROM "UNDERGROUND SERVICE ALERT" (1-800-422-4133) AT LEAST TWO WORKING DAYS PRIOR TO COMMENCING EXCAVATION.

FILE NO.:

REVISIONS

NUMBER	DATE	INITIALS	DESCRIPTION	APPROVED	INSTALLED
A	12/2017		ISSUE FOR BID		
△B	03/08/18	NAG	NOTE REVISIONS		
			"SHEET" CHANGED TO "DRAWING"		

REFERENCES

BENCHMARK NO.: 3B-98-85 (PT. 400) ELEV.: 140.19 (NAVD 88)

FOUND 3.75" OCS ALUMINUM BENCHMARK DISK STAMPED "3B-98-5", SET IN THE NORTHWESTERLY CORNER OF A 4 FT. BY 8 FT. CONCRETE CATCH BASIN. MONUMENT IS LOCATED IN THE SOUTHEASTERLY CORNER OF THE INTERSECTION OF FRUIT STREET AND THE ATCHINSON TOPEKA AND SANTA FE RAILROAD, 23 FT. EASTERLY OF THE CENTERLINE OF THE RAILWAY, 19.5 FT. SOUTHERLY OF THE CENTERLINE OF FRUIT STREET AND 14.3 FT. WEST OF A POWER POLE (#716815E"). ORANGE COUNTY SURVEYS, PUBLIC WORKS.

REGISTERED PROFESSIONAL ENGINEER NEHA A. GAJJAR No. 55574 Exp. 12-31-18 CIVIL STATE OF CALIFORNIA

HNTB
The HNTB Companies
Infrastructure Solutions
200 E. Sandpointe Ave., Ste. 200
Santa Ana, CA 92707
Phone: 714-460-1600

PSOMAS
3 HUTTON CENTRE DRIVE, SUITE 200
SANTA ANA, CA 92707
(714) 751-7373 WWW.PSOMAS.COM

PREPARED UNDER THE SUPERVISION OF: NEHA GAJJAR		DATE
	RCE NO.: 55574	12/2018
DESIGNED: MATTHEW VERA DRAWN: MATTHEW VERA	CHECKED: NEHA GAJJAR	10/2017

WATER IMPROVEMENT PLANS
OC STREETCAR
SANTA ANA BLVD STA: 44+00 TO 52+44

WN02

ORANGE COUNTY TRANSPORTATION AUTHORITY

CITY OF SANTA ANA PROJECT NO. 17-6766-C: OC STREETCAR FROM HARBOR BLVD TO SARTC

M:\2HNT01040\Public...Work\Sheets\...watr-Addendum\SHT-WN02-62481-R0B.dwg 02/27/18 8:44am

SHT-WN02-62481-R0B.DWG

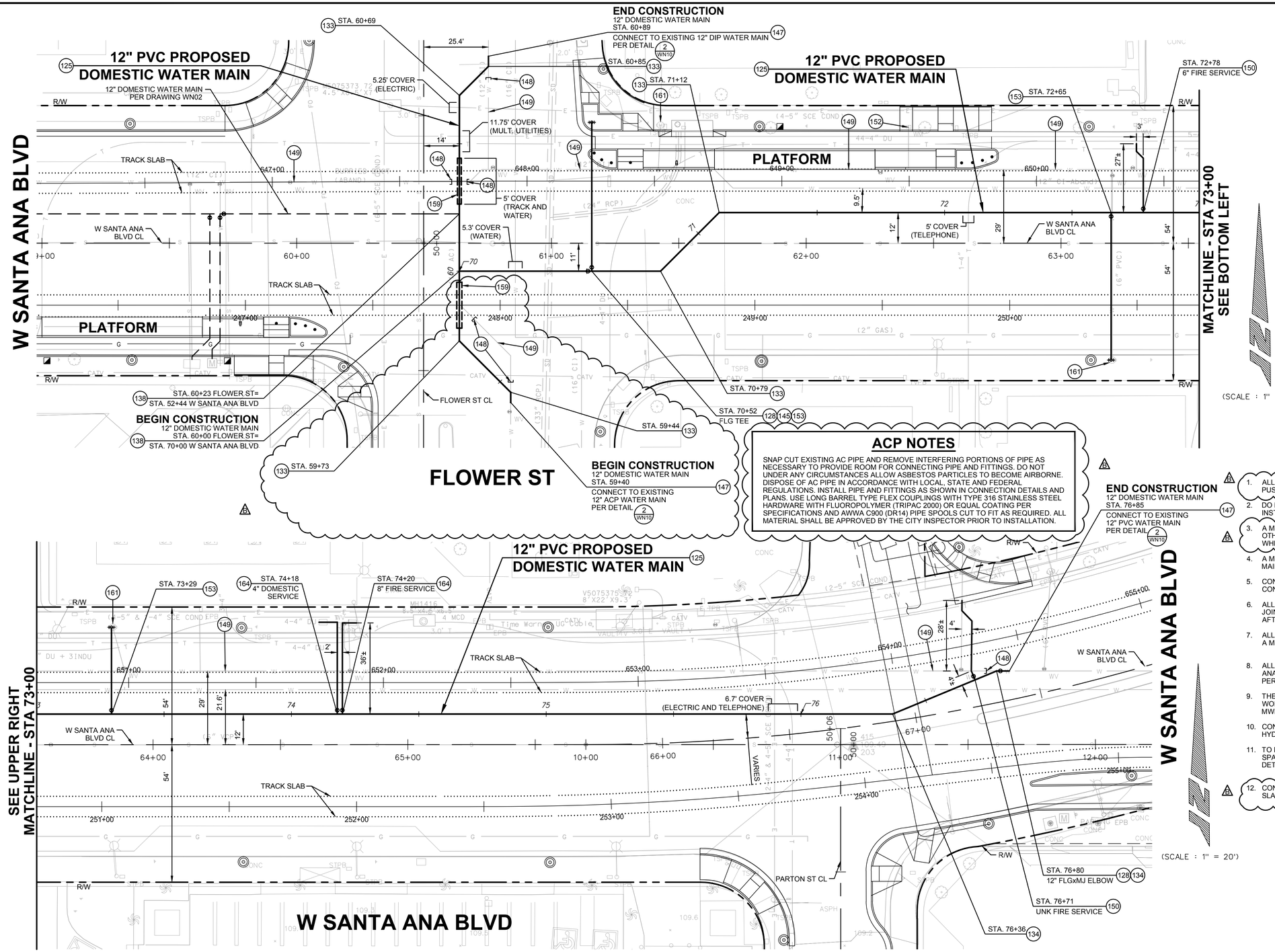

WATER CONSTRUCTION NOTES

125 CONSTRUCT 12" AWWA C900 (DR14) PVC PIPE AND DI FITTINGS PER THE CITY OF SANTA ANA STD. PLAN NOs. 1150 AND 1420

128 INSTALL 12" FLGxMJ GATE VALVE PER THE CITY OF SANTA ANA STD. PLAN NO. 1410

133 INSTALL 12" DI 45° BEND AND THRUST BLOCK PER THE CITY OF SANTA ANA STD. PLAN NO. 1412.

134 INSTALL 12" DI 22-1/2° BEND AND THRUST BLOCK PER THE CITY OF SANTA ANA STD. PLAN NO. 1412.

138 INSTALL 12" DI TEE AND THRUST BLOCK PER THE CITY OF SANTA ANA STD. PLAN NO. 1412.

145 CONSTRUCT 12" DI FLGxPO ADAPTER.

147 REMOVE AND DISPOSE OF INTERFERING PORTIONS OF EXISTING PIPE AND VALVES. CONNECT AND TIE-IN TO EXISTING WATER MAIN PER DETAIL NOTED ON PLANS.

148 CUT EXISTING WATERLINE, CAP AND ABANDON IN PLACE.

⚠5 149 ABANDON EXISTING WATER MAIN IN PLACE. REMOVE AND DISPOSE OF INTERFERING PORTIONS OF EXISTING WATER MAIN INCLUDING VALVES AND APPURTENANCES. REMOVE VALVES PER SANTA ANA STD. PLAN NO. 1430. IF THE EXISTING MAIN TO BE ABANDONED IS LOCATED UNDERNEATH PROPOSED TRACK SLABS OR PLATFORMS, CONTRACTOR SHALL FILL MAIN WITH CLSM.

150 CONTRACTOR SHALL FIELD VERIFY THE SIZE AND LOCATION OF ALL SERVICES PRIOR TO REPLACEMENT/RECONNECTION. CONNECT TO EXISTING WATER SERVICE PER DETAIL 7 WN11

151 CONSTRUCT NEW WATER SERVICE FROM MAIN TO EXISTING WATER METER PER THE CITY OF SANTA ANA STD. PLAN NO. 1401 OR 1402 AND PER DETAIL 1 WN11

152 CONSTRUCT NEW WATER SERVICE AND NEW METER PER THE CITY OF SANTA ANA STD. PLAN NO. 1401 OR 1402 AND PER DETAIL 1 WN11

153 CONSTRUCT FIRE HYDRANT ASSEMBLY PER THE CITY OF SANTA ANA STD. PLAN NO. 1405.

159 INSTALL PVC CASING PER DETAIL 2 WN11

161 REMOVE AND SALVAGE EXISTING FIRE HYDRANT AND RETURN TO THE CITY OF SANTA ANA WATER RESOURCES DIVISION. REMOVE VALVE, VALVE BOX FRAME AND COVER PER SANTA ANA STD. PLAN NO. 1430.

164 CONTRACTOR SHALL FIELD VERIFY THE SIZE AND LOCATION OF ALL SERVICES PRIOR TO REPLACEMENT/RECONNECTION. CONNECT TO EXISTING WATER SERVICES PER DETAIL 8 WN11

ACP NOTES

SNAP CUT EXISTING AC PIPE AND REMOVE INTERFERING PORTIONS OF PIPE AS NECESSARY TO PROVIDE ROOM FOR CONNECTING PIPE AND FITTINGS. DO NOT UNDER ANY CIRCUMSTANCES ALLOW ASBESTOS PARTICLES TO BECOME AIRBORNE. DISPOSE OF AC PIPE IN ACCORDANCE WITH LOCAL, STATE AND FEDERAL REGULATIONS. INSTALL PIPE AND FITTINGS AS SHOWN IN CONNECTION DETAILS AND PLANS. USE LONG BARREL TYPE FLEX COUPLINGS WITH TYPE 316 STAINLESS STEEL HARDWARE WITH FLUOROPOLYMER (TRIPAC 2000) OR EQUAL COATING PER SPECIFICATIONS AND AWWA C900 (DR14) PIPE SPOOLS CUT TO FIT AS REQUIRED. ALL MATERIAL SHALL BE APPROVED BY THE CITY INSPECTOR PRIOR TO INSTALLATION.

NOTES TO CONTRACTOR

⚠5 1. ALL BENDS 11 1/4° OR GREATER, TEES AND CROSSES SHALL BE DUCTILE IRON (CLASS 350) WITH PUSH-ON JOINTS UNLESS NOTED OTHERWISE.

2. DO NOT EXCEED 80% OF MANUFACTURER'S RECOMMENDED DEFLECTION REQUIREMENTS FOR PIPE INSTALLATION.

⚠5 3. A MINIMUM COVER OF 36" SHALL BE MAINTAINED OVER CENTERLINE OF ALL PIPELINES UNLESS NOTED OTHERWISE. A MINIMUM COVER OF 48" SHALL BE MAINTAINED OVER CENTERLINE OF ALL PIPELINES WHEN CROSSING PROPOSED TRACKS UNLESS NOTED OTHERWISE.

4. A MINIMUM 12" CLEARANCE BETWEEN EXISTING UTILITIES AND PROPOSED PIPELINES SHALL BE MAINTAINED AT CROSSINGS UNLESS NOTED OTHERWISE.

5. CONTRACTOR SHALL VERIFY DEPTH, LOCATION AND DIMENSIONS OF EXISTING FACILITIES AND CONNECTION POINTS PRIOR TO CONSTRUCTION OF WATER MAINS.

6. ALL METALLIC FITTINGS, VALVES AND APPURTENANCES (INCLUDING VALVES, BOLTS, FLANGE JOINTS, JOINT HARNESSES, FLEXIBLE COUPLINGS, ETC.) SHALL BE COATED WITH WAX TAPE PER AWWA C217 AFTER ASSEMBLY. FLANGE COUPLING ADAPTERS MAY BE EPOXY COATED.

7. ALL COPPER TUBING SHALL BE PLACED IN 10-MIL POLYETHYLENE SLEEVES WITH BEDDING/BACKFILL OF A MINIMUM OF 2" THICK IMPORTED SAND (SE ≥ 30) PER DETAIL 1 WN11

8. ALL HORIZONTAL BENDS AND FITTINGS SHALL BE PLACED WITH THRUST BLOCKS PER CITY OF SANTA ANA STD. PLAN 1412. ALL VERTICAL BENDS SHALL BE PLACED WITH VERTICAL BEND ANCHOR BLOCKS PER CITY OF SANTA ANA STD. PLAN 1420.

9. THE CONTRACTOR SHALL CONTACT RICK BICKER OR TIM HATCH AT 714-577-5084 AT LEAST TWO (2) WORKING DAYS (MONDAY THROUGH THURSDAY) PRIOR TO STARTING ANY WORK IN THE VICINITY OF MWD FACILITIES.

10. CONTRACTOR TO REFERENCE UTILITY PLAN DRAWINGS CU01 TO CU29 FOR WATER SERVICE AND FIRE HYDRANT LATERAL RECONNECTIONS TO EXISTING WATER MAINS.

11. TO MEET COVERS NOTED IN PLANS, CONTRACTOR SHALL REFERENCE DETAIL 4 WN11. IF ADEQUATE SPACE IS NOT AVAILABLE, CONTRACTOR SHALL REFERENCE DETAIL 3 WN11 WITH INSPECTOR'S APPROVAL.

⚠5 12. CONTRACTOR SHALL FILL EXISTING ABANDONED LINES LOCATED UNDERNEATH PROPOSED TRACK SLABS AND PLATFORMS WITH CLSM.

Underground Service Alert of Southern California
811 CALL: **TOLL FREE 1-800-422-4133**
TWO WORKING DAYS BEFORE YOU DIG

NOTICE TO CONTRACTOR

PURSUANT TO ASSEMBLY BILL 3019 NO EXCAVATION PERMIT IS VALID UNLESS THE CONTRACTOR CONTACTS AND OBTAINS AN INQUIRY I.D. NUMBER FROM "UNDERGROUND SERVICE ALERT" (1-800-422-4133) AT LEAST TWO WORKING DAYS PRIOR TO COMMENCING EXCAVATION.

FILE NO.:

REVISIONS

NUMBER	DATE	INITIALS	DESCRIPTION	APPROVED	INSTALLED
A	12/2017		ISSUE FOR BID		
⚠5	03/08/18	NAG	PLAN AND NOTE REVISIONS		
			"SHEET" CHANGED TO "DRAWING"		

REFERENCES

BENCHMARK NO.: 3B-98-85 (PT. 400) ELEV.: 140.19 (NAVD 88)

FOUND 3.75" OCS ALUMINUM BENCHMARK DISK STAMPED "3B-98-5", SET IN THE NORTHWESTERLY CORNER OF A 4 FT. BY 8 FT. CONCRETE CATCH BASIN. MONUMENT IS LOCATED IN THE SOUTHEASTERLY CORNER OF THE INTERSECTION OF FRUIT STREET AND THE ATCHINSON TOPEKA AND SANTA FE RAILROAD, 23 FT. EASTERLY OF THE CENTERLINE OF THE RAILWAY, 19.5 FT. SOUTHERLY OF THE CENTERLINE OF FRUIT STREET AND 14.3 FT. WEST OF A POWER POLE (#716815E"). ORANGE COUNTY SURVEYS, PUBLIC WORKS.

REGISTERED PROFESSIONAL ENGINEER — NEHA A. GAJJAR — No. 55574 — Exp. 12-31-18 — CIVIL — STATE OF CALIFORNIA

HNTB
The HNTB Companies Infrastructure Solutions
200 E. Sandpointe Ave., Ste. 200
Santa Ana, CA 92707
Phone: 714-460-1600

PSOMAS
3 HUTTON CENTRE DRIVE, SUITE 200
SANTA ANA, CA 92707
(714) 751-7373 WWW.PSOMAS.COM

PREPARED UNDER THE SUPERVISION OF: NEHA GAJJAR		DATE
	RCE NO.: 55574	12/2018
DESIGNED: MATTHEW VERA DRAWN: MATTHEW VERA	CHECKED: NEHA GAJJAR	10/2017

PUBLIC WORKS DEPARTMENT — Certified Construction Inspector — Established in 1889 — Yours to Build

OCTA

DOWNTOWN ORANGE COUNTY — SANTA ANA

WATER IMPROVEMENT PLANS

OC STREETCAR

SANTA ANA BLVD STA: 70+00 TO STA. 76+85
FLOWER STREET STA: 59+96 TO 60+89

ORANGE COUNTY TRANSPORTATION AUTHORITY

WN03

CITY OF SANTA ANA PROJECT NO. 17-6766-C: OC STREETCAR FROM HARBOR BLVD TO SARTC

M:\2INT01040\Public_Works\Sheets_wstr-Addendum\SHT-WN03-62481-R0B.dwg 02/27/18 8:45am

SHT-WN03-62481-R0B.DWG

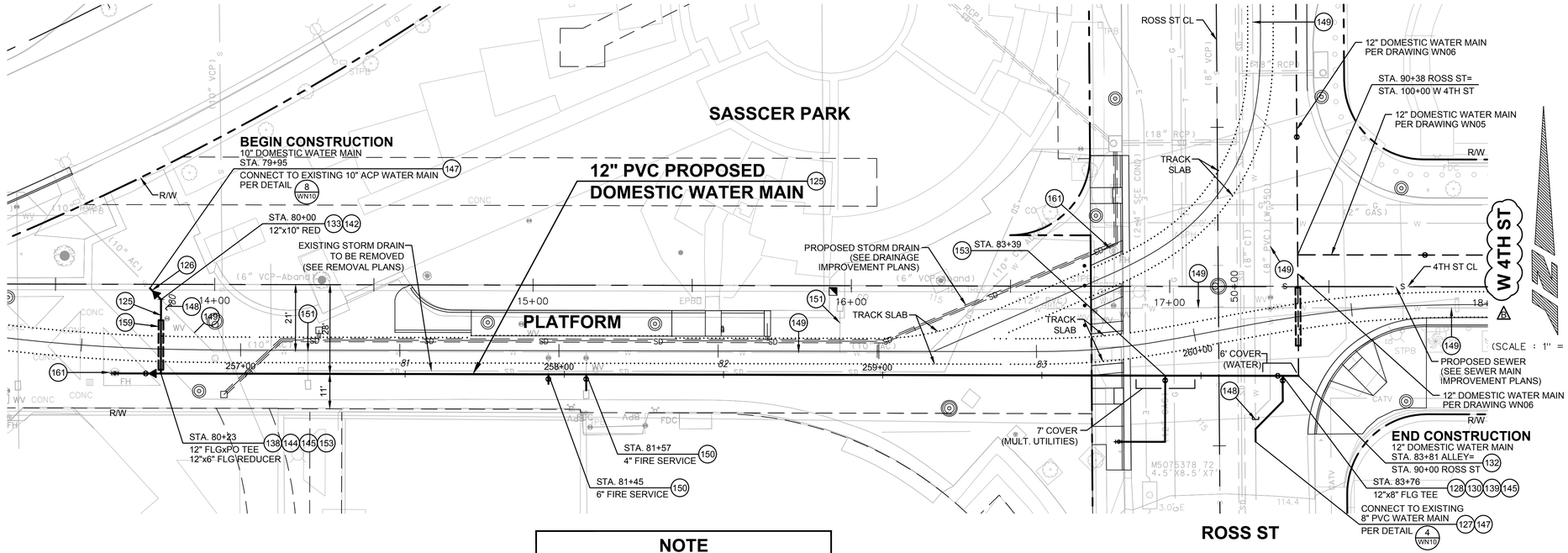

NOTE

A MINIMUM COVER OF 48" SHALL BE MAINTAINED OVER CENTERLINE OF PIPELINE FROM STA. 79+95 TO STA. 83+81 UNLESS OTHERWISE NOTED.

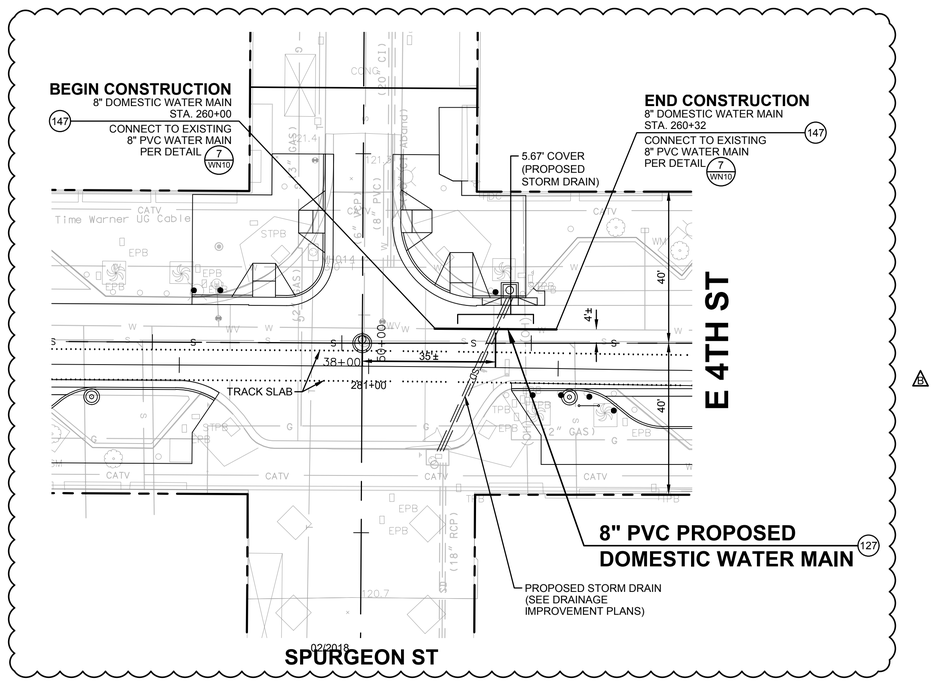

ACP NOTES

SNAP CUT EXISTING AC PIPE AND REMOVE INTERFERING PORTIONS OF PIPE AS NECESSARY TO PROVIDE ROOM FOR CONNECTING PIPE AND FITTINGS. DO NOT UNDER ANY CIRCUMSTANCES ALLOW ASBESTOS PARTICLES TO BECOME AIRBORNE. DISPOSE OF AC PIPE IN ACCORDANCE WITH LOCAL, STATE AND FEDERAL REGULATIONS. INSTALL PIPE AND FITTINGS AS SHOWN IN CONNECTION DETAILS AND PLANS. USE LONG BARREL TYPE FLEX COUPLINGS WITH TYPE 316 STAINLESS STEEL HARDWARE WITH FLUOROPOLYMER (TRIPAC 2000) OR EQUAL COATING PER SPECIFICATIONS AND AWWA C900 (DR14) PIPE SPOOLS CUT TO FIT AS REQUIRED. ALL MATERIAL SHALL BE APPROVED BY THE CITY INSPECTOR PRIOR TO INSTALLATION.

WATER CONSTRUCTION NOTES

125 CONSTRUCT 12" AWWA C900 (DR14) PVC PIPE AND DI FITTINGS PER THE CITY OF SANTA ANA STD. PLAN NOs. 1150 AND 1420.

126 CONSTRUCT 10" AWWA C900 (DR14) PVC PIPE AND DI FITTINGS PER THE CITY OF SANTA ANA STD. PLAN NOs. 1150 AND 1420.

127 CONSTRUCT 8" AWWA C900 (DR14) PVC PIPE AND DI FITTINGS PER THE CITY OF SANTA ANA STD. PLAN NOs. 1150 AND 1420.

128 INSTALL 12" FLGxMJ GATE VALVE PER THE CITY OF SANTA ANA STD. PLAN NO. 1410

130 INSTALL 8" FLGxMJ GATE VALVE PER THE CITY OF SANTA ANA STD. PLAN NO. 1410

132 INSTALL 12" DI 90° BEND AND THRUST BLOCK PER THE CITY OF SANTA ANA STD. PLAN NO. 1412.

133 INSTALL 12" DI 45° BEND AND THRUST BLOCK PER THE CITY OF SANTA ANA STD. PLAN NO. 1412.

138 INSTALL 12" DI TEE AND THRUST BLOCK PER THE CITY OF SANTA ANA STD. PLAN NO. 1412.

139 INSTALL 12"x8" DI TEE AND THRUST BLOCK PER THE CITY OF SANTA ANA STD. PLAN NO. 1412.

142 INSTALL 12"x10" DI REDUCER

144 INSTALL 12"x6" DI REDUCER

145 CONSTRUCT 12" DI FLGxPO ADAPTER.

147 REMOVE AND DISPOSE OF INTERFERING PORTIONS OF EXISTING PIPE AND VALVES. CONNECT AND TIE-IN TO EXISTING WATER MAIN PER DETAIL NOTED ON PLANS.

148 CUT EXISTING WATERLINE, CAP AND ABANDON IN PLACE.

△B 149 ABANDON EXISTING WATER MAIN IN PLACE. REMOVE AND DISPOSE OF INTERFERING PORTIONS OF EXISTING WATER MAIN INCLUDING VALVES AND APPURTENANCES. REMOVE VALVES PER SANTA ANA STD. PLAN NO. 1430. IF THE EXISTING MAIN TO BE ABANDONED IS LOCATED UNDERNEATH PROPOSED TRACK SLABS OR PLATFORMS, CONTRACTOR SHALL FILL MAIN WITH CLSM.

150 CONTRACTOR SHALL FIELD VERIFY THE SIZE AND LOCATION OF ALL SERVICES PRIOR TO REPLACEMENT/RECONNECTION. CONNECT TO EXISTING WATER SERVICE PER DETAIL 7 WN11

151 CONSTRUCT NEW WATER SERVICE FROM MAIN TO EXISTING WATER METER PER THE CITY OF SANTA ANA STD. PLAN NO. 1401 OR 1402 AND PER DETAIL 1 WN11

152 CONSTRUCT NEW WATER SERVICE AND NEW METER PER THE CITY OF SANTA ANA STD. PLAN NO. 1401 OR 1402 AND PER DETAIL 1 WN11

153 CONSTRUCT FIRE HYDRANT ASSEMBLY PER THE CITY OF SANTA ANA STD. PLAN NO. 1405.

159 INSTALL PVC CASING PER DETAIL 2 WN11

161 REMOVE AND SALVAGE EXISTING FIRE HYDRANT AND RETURN TO THE CITY OF SANTA ANA WATER RESOURCES DIVISION. REMOVE VALVE, VALVE BOX FRAME AND COVER PER SANTA ANA STD. PLAN NO. 1430.

NOTES TO CONTRACTOR

△B 1. ALL BENDS 11 1/4° OR GREATER, TEES AND CROSSES SHALL BE DUCTILE IRON (CLASS 350) WITH PUSH-ON JOINTS UNLESS NOTED OTHERWISE.

2. DO NOT EXCEED 80% OF MANUFACTURER'S RECOMMENDED DEFLECTION REQUIREMENTS FOR PIPE INSTALLATION.

△B 3. A MINIMUM COVER OF 36" SHALL BE MAINTAINED OVER CENTERLINE OF ALL PIPELINES UNLESS NOTED OTHERWISE. A MINIMUM COVER OF 48" SHALL BE MAINTAINED OVER CENTERLINE OF ALL PIPELINES WHEN CROSSING PROPOSED TRACKS UNLESS NOTED OTHERWISE.

4. A MINIMUM 12" CLEARANCE BETWEEN EXISTING UTILITIES AND PROPOSED PIPELINES SHALL BE MAINTAINED AT CROSSINGS UNLESS NOTED OTHERWISE.

5. CONTRACTOR SHALL VERIFY DEPTH, LOCATION AND DIMENSIONS OF EXISTING FACILITIES AND CONNECTION POINTS PRIOR TO CONSTRUCTION OF WATER MAINS.

6. ALL METALLIC FITTINGS, VALVES AND APPURTENANCES (INCLUDING VALVES, BOLTS, FLANGE JOINTS, JOINT HARNESSES, FLEXIBLE COUPLINGS, ETC.) SHALL BE COATED WITH WAX TAPE PER AWWA C217 AFTER ASSEMBLY. FLANGE COUPLING ADAPTERS MAY BE EPOXY COATED.

7. ALL COPPER TUBING SHALL BE PLACED IN 10-MIL POLYETHYLENE SLEEVES WITH BEDDING/BACKFILL OF A MINIMUM OF 2" THICK IMPORTED SAND (SE ≥ 30) PER DETAIL 1 WN11

8. ALL HORIZONTAL BENDS AND FITTINGS SHALL BE PLACED WITH THRUST BLOCKS PER CITY OF SANTA ANA STD. PLAN 1412. ALL VERTICAL BENDS SHALL BE PLACED WITH VERTICAL BEND ANCHOR BLOCKS PER CITY OF SANTA ANA STD. PLAN 1420.

9. THE CONTRACTOR SHALL CONTACT RICK BICKER OR TIM HATCH AT 714-577-5084 AT LEAST TWO (2) WORKING DAYS (MONDAY THROUGH THURSDAY) PRIOR TO STARTING ANY WORK IN THE VICINITY OF MWD FACILITIES.

10. CONTRACTOR TO REFERENCE UTILITY PLAN DRAWINGS CU01 TO CU29 FOR WATER SERVICE AND FIRE HYDRANT LATERAL RECONNECTIONS TO EXISTING WATER MAINS.

11. TO MEET COVERS NOTED IN PLANS, CONTRACTOR SHALL REFERENCE DETAIL 4 WN11 IF ADEQUATE SPACE IS NOT AVAILABLE, CONTRACTOR SHALL REFERENCE DETAIL 3 WN11 WITH INSPECTOR'S APPROVAL.

△B 12. CONTRACTOR SHALL FILL EXISTING ABANDONED LINES LOCATED UNDERNEATH PROPOSED TRACK SLABS AND PLATFORMS WITH CLSM.

Underground Service Alert
of Southern California
811 CALL: **TOLL FREE 1-800-422-4133**
TWO WORKING DAYS BEFORE YOU DIG

NOTICE TO CONTRACTOR

PURSUANT TO ASSEMBLY BILL 3019 NO EXCAVATION PERMIT IS VALID UNLESS THE CONTRACTOR CONTACTS AND OBTAINS AN INQUIRY I.D. NUMBER FROM "UNDERGROUND SERVICE ALERT" (1-800-422-4133) AT LEAST TWO WORKING DAYS PRIOR TO COMMENCING EXCAVATION.

FILE NO.:

REVISIONS

NUMBER	DATE	INITIALS	DESCRIPTION	APPROVED	INSTALLED
A	12/2017		ISSUE FOR BID		
△B	03/08/18	NAG	ADDED RELOCATION, NOTE REVISIONS		
			"SHEET" CHANGED TO "DRAWING"		

REFERENCES

BENCHMARK NO.: 3B-98-85 (PT. 400) ELEV.: 140.19 (NAVD 88)

FOUND 3.75" OCS ALUMINUM BENCHMARK DISK STAMPED "3B-98-5", SET IN THE NORTHWESTERLY CORNER OF A 4 FT. BY 8 FT. CONCRETE CATCH BASIN. MONUMENT IS LOCATED IN THE SOUTHEASTERLY CORNER OF THE INTERSECTION OF FRUIT STREET AND THE ATCHINSON TOPEKA AND SANTA FE RAILROAD, 23 FT. EASTERLY OF THE CENTERLINE OF THE RAILWAY, 19.5 FT. SOUTHERLY OF THE CENTERLINE OF FRUIT STREET AND 14.3 FT. WEST OF A POWER POLE (#716815E"). ORANGE COUNTY SURVEYS, PUBLIC WORKS.

REGISTERED PROFESSIONAL ENGINEER — NEHA A. GAJJAR — No. 55574 — Exp. 12-31-18 — CIVIL — STATE OF CALIFORNIA

HNTB
The HNTB Companies
Infrastructure Solutions
200 E. Sandpointe Ave., Ste. 200
Santa Ana, CA 92707
Phone: 714-460-1600

PSOMAS
3 HUTTON CENTRE DRIVE, SUITE 200
SANTA ANA, CA 92707
(714) 751-7373 WWW.PSOMAS.COM

PREPARED UNDER THE SUPERVISION OF: NEHA GAJJAR — DATE

RCE NO.: 55574 — 12/2018

DESIGNED: MATTHEW VERA DRAWN: MATTHEW VERA CHECKED: NEHA GAJJAR — 10/2017

OCTA

WATER IMPROVEMENT PLANS — WN04

OC STREETCAR

△B WALKWAY (SASSCER PARK) STA: 79+95 TO 83+81
E 4TH STREET STA: 260+00 TO 260+32

ORANGE COUNTY TRANSPORTATION AUTHORITY

CITY OF SANTA ANA PROJECT NO. 17-6766-C: OC STREETCAR FROM HARBOR BLVD TO SARTC

M:\2HNT01\0400\Public_Works\Sheets_wat\~Addendum\SHT-WN04-62481-R0B.dwg 02/27/18 8:46am

SHT-WN04-62481-R0B.DWG

02/2018

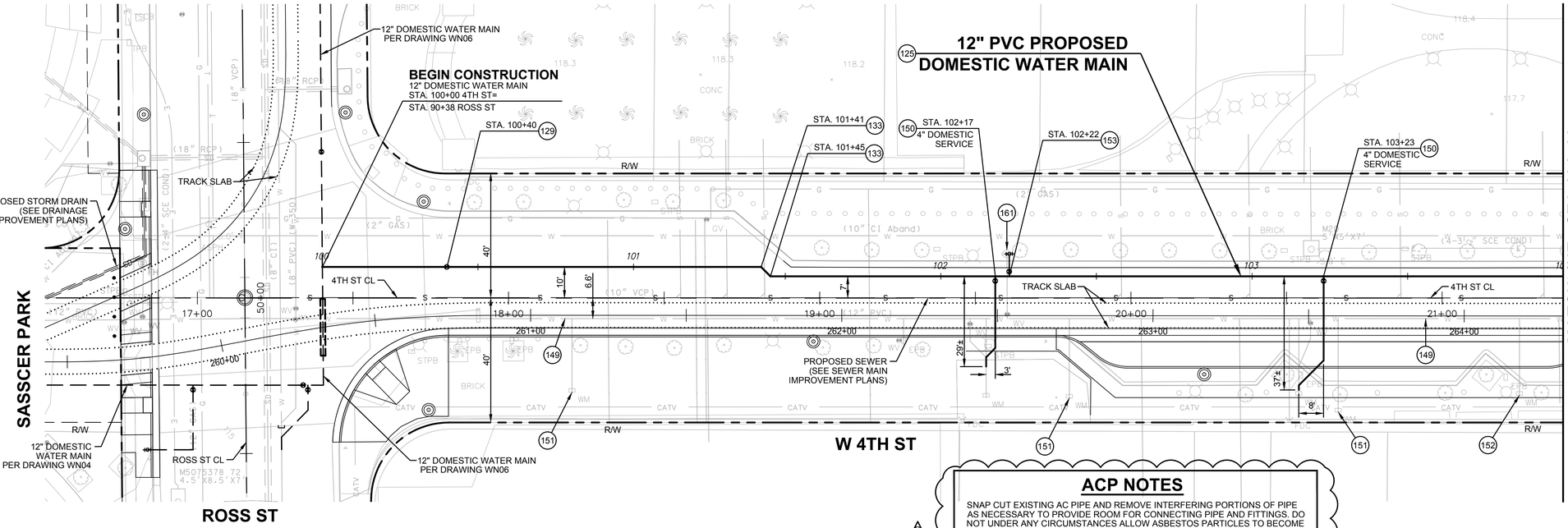

ACP NOTES

SNAP CUT EXISTING AC PIPE AND REMOVE INTERFERING PORTIONS OF PIPE AS NECESSARY TO PROVIDE ROOM FOR CONNECTING PIPE AND FITTINGS. DO NOT UNDER ANY CIRCUMSTANCES ALLOW ASBESTOS PARTICLES TO BECOME AIRBORNE. DISPOSE OF AC PIPE IN ACCORDANCE WITH LOCAL, STATE AND FEDERAL REGULATIONS. INSTALL PIPE AND FITTINGS AS SHOWN IN CONNECTION DETAILS AND PLANS. USE LONG BARREL TYPE FLEX COUPLINGS WITH TYPE 316 STAINLESS STEEL HARDWARE WITH FLUOROPOLYMER (TRIPAC 2000) OR EQUAL COATING PER SPECIFICATIONS AND AWWA C900 (DR14) PIPE SPOOLS CUT TO FIT AS REQUIRED. ALL MATERIAL SHALL BE APPROVED BY THE CITY INSPECTOR PRIOR TO INSTALLATION.

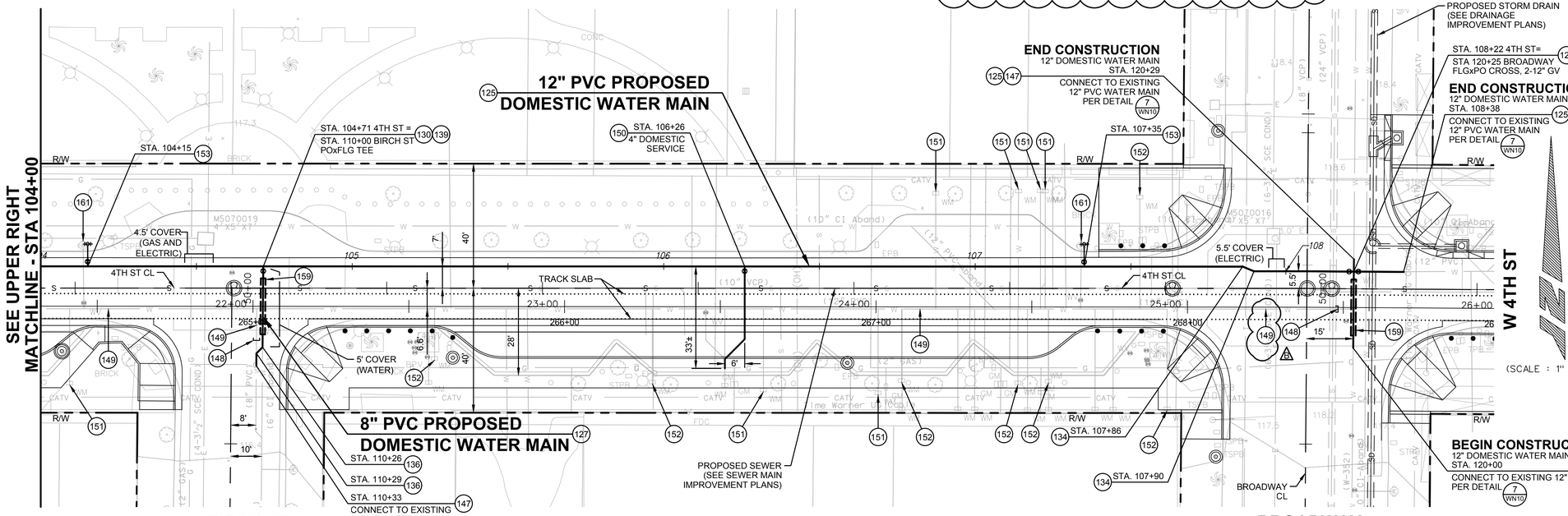

WATER CONSTRUCTION NOTES

(125) CONSTRUCT 12" AWWA C900 (DR14) PVC PIPE AND DI FITTINGS PER THE CITY OF SANTA ANA STD. PLAN NOs. 1150 AND 1420.

(127) CONSTRUCT 8" AWWA C900 (DR14) PVC PIPE AND DI FITTINGS PER THE CITY OF SANTA ANA STD. PLAN NOs. 1150 AND 1420.

(128) INSTALL 12" FLGxMJ GATE VALVE PER THE CITY OF SANTA ANA STD. PLAN NO. 1410

(129) INSTALL 12" MJ GATE VALVE WITH VALVE ANCHOR PER THE CITY OF SANTA ANA STD. PLAN NO. 1410 AND 1419

(130) INSTALL 8" FLGxMJ GATE VALVE PER THE CITY OF SANTA ANA STD. PLAN NO. 1410

(133) INSTALL 12" DI 45° BEND AND THRUST BLOCK PER THE CITY OF SANTA ANA STD. PLAN NO. 1412.

(134) INSTALL 12" DI 22-1/2° BEND AND THRUST BLOCK PER THE CITY OF SANTA ANA STD. PLAN NO. 1412.

(136) INSTALL 8" DI 45° BEND AND THRUST BLOCK PER THE CITY OF SANTA ANA STD. PLAN NO. 1412.

(139) INSTALL 12"x8" DI TEE AND THRUST BLOCK PER THE CITY OF SANTA ANA STD. PLAN NO. 1412.

(141) INSTALL 12" DI CROSS AND THRUST BLOCK PER THE CITY OF SANTA ANA STD. PLAN NO. 1412.

(147) REMOVE AND DISPOSE OF INTERFERING PORTIONS OF EXISTING PIPE AND VALVES. CONNECT AND TIE-IN TO EXISTING WATER MAIN PER DETAIL NOTED ON PLANS.

(148) CUT EXISTING WATERLINE, CAP AND ABANDON IN PLACE.

(149) ABANDON EXISTING WATER MAIN IN PLACE. REMOVE AND DISPOSE OF INTERFERING PORTIONS OF EXISTING WATER MAIN INCLUDING VALVES AND APPURTENANCES. REMOVE VALVES PER SANTA ANA STD. PLAN NO. 1430. IF THE EXISTING MAIN TO BE ABANDONED IS LOCATED UNDERNEATH PROPOSED TRACK SLABS OR PLATFORMS, CONTRACTOR SHALL FILL MAIN WITH CLSM.

(150) CONTRACTOR SHALL FIELD VERIFY THE SIZE AND LOCATION OF ALL SERVICES PRIOR TO REPLACEMENT/RECONNECTION. CONNECT TO EXISTING WATER SERVICE PER DETAIL 7 WN11

(151) CONSTRUCT NEW WATER SERVICE FROM MAIN TO EXISTING WATER METER PER THE CITY OF SANTA ANA STD. PLAN NO. 1401 OR 1402 AND PER DETAIL 1 WN11

(152) CONSTRUCT NEW WATER SERVICE AND NEW METER PER THE CITY OF SANTA ANA STD. PLAN NO. 1401 OR 1402 AND PER DETAIL 1 WN11

(153) CONSTRUCT FIRE HYDRANT ASSEMBLY PER THE CITY OF SANTA ANA STD. PLAN NO. 1405.

(159) INSTALL PVC CASING PER DETAIL 2 WN11

(161) REMOVE AND SALVAGE EXISTING FIRE HYDRANT AND RETURN TO THE CITY OF SANTA ANA WATER RESOURCES DIVISION. REMOVE VALVE, VALVE BOX FRAME AND COVER PER SANTA ANA STD. PLAN NO. 1430.

NOTES TO CONTRACTOR

1. ALL BENDS 11 1/4° OR GREATER, TEES AND CROSSES SHALL BE DUCTILE IRON (CLASS 350) WITH PUSH-ON JOINTS UNLESS NOTED OTHERWISE.
2. DO NOT EXCEED 80% OF MANUFACTURER'S RECOMMENDED DEFLECTION REQUIREMENTS FOR PIPE INSTALLATION.
3. A MINIMUM COVER OF 36" SHALL BE MAINTAINED OVER CENTERLINE OF ALL PIPELINES UNLESS NOTED OTHERWISE. A MINIMUM COVER OF 48" SHALL BE MAINTAINED OVER CENTERLINE OF ALL PIPELINES WHEN CROSSING PROPOSED TRACKS UNLESS NOTED OTHERWISE.
4. A MINIMUM 12" CLEARANCE BETWEEN EXISTING UTILITIES AND PROPOSED PIPELINES SHALL BE MAINTAINED AT CROSSINGS UNLESS NOTED OTHERWISE.
5. CONTRACTOR SHALL VERIFY DEPTH, LOCATION AND DIMENSIONS OF EXISTING FACILITIES AND CONNECTION POINTS PRIOR TO CONSTRUCTION OF WATER MAINS.
6. ALL METALLIC FITTINGS, VALVES AND APPURTENANCES (INCLUDING VALVES, BOLTS, FLANGE JOINTS, JOINT HARNESSES, FLEXIBLE COUPLINGS, ETC.) SHALL BE COATED WITH WAX TAPE PER AWWA C217 AFTER ASSEMBLY. FLANGE COUPLING ADAPTERS MAY BE EPOXY COATED.
7. ALL COPPER TUBING SHALL BE PLACED IN 10-MIL POLYETHYLENE SLEEVES WITH BEDDING/BACKFILL OF A MINIMUM OF 2" THICK IMPORTED SAND (SE ≥ 30) PER DETAIL 1 WN11
8. ALL HORIZONTAL BENDS AND FITTINGS SHALL BE PLACED WITH THRUST BLOCKS PER CITY OF SANTA ANA STD. PLAN 1412. ALL VERTICAL BENDS SHALL BE PLACED WITH VERTICAL BEND ANCHOR BLOCKS PER CITY OF SANTA ANA STD. PLAN 1420.
9. THE CONTRACTOR SHALL CONTACT RICK BICKER OR TIM HATCH AT 714-577-5084 AT LEAST TWO (2) WORKING DAYS (MONDAY THROUGH THURSDAY) PRIOR TO STARTING ANY WORK IN THE VICINITY OF MWD FACILITIES.
10. CONTRACTOR TO REFERENCE UTILITY PLAN DRAWINGS CU01 TO CU29 FOR WATER SERVICE AND FIRE HYDRANT LATERAL RECONNECTIONS TO EXISTING WATER MAINS.
11. TO MEET COVERS NOTED IN PLANS, CONTRACTOR SHALL REFERENCE DETAIL 4 WN11 IF ADEQUATE SPACE IS NOT AVAILABLE, CONTRACTOR SHALL REFERENCE DETAIL 3 WN11 WITH INSPECTOR'S APPROVAL.
12. CONTRACTOR SHALL FILL EXISTING ABANDONED LINES LOCATED UNDERNEATH PROPOSED TRACK SLABS AND PLATFORMS WITH CLSM.

Underground Service Alert of Southern California

811 CALL: **TOLL FREE 1-800-422-4133**

TWO WORKING DAYS BEFORE YOU DIG

NOTICE TO CONTRACTOR

PURSUANT TO ASSEMBLY BILL 3019 NO EXCAVATION PERMIT IS VALID UNLESS THE CONTRACTOR CONTACTS AND OBTAINS AN INQUIRY I.D. NUMBER FROM "UNDERGROUND SERVICE ALERT" (1-800-422-4133) AT LEAST TWO WORKING DAYS PRIOR TO COMMENCING EXCAVATION.

CITY OF SANTA ANA PROJECT NO. 17-6766-C: OC STREETCAR FROM HARBOR BLVD TO SARTC

M:\2INT01040\Public_Works\Sheets_wtr-Addendum\SHT-WN05-62481-R0B.dwg 02/27/18 8:47am

SHT-WN05-62481-R0B.DWG

FILE NO.:

REVISIONS

NUMBER	DATE	INITIALS	DESCRIPTION	APPROVED	INSTALLED
A	12/2017		ISSUE FOR BID		
B	03/08/18	NAG	PLAN AND NOTE REVISIONS		
			"SHEET" CHANGED TO "DRAWING"		

REFERENCES

BENCHMARK NO.: 3B-98-85 (PT. 400) ELEV.: 140.19 (NAVD 88)

FOUND 3.75" OCS ALUMINUM BENCHMARK DISK STAMPED "3B-98-5", SET IN THE NORTHWESTERLY CORNER OF A 4 FT. BY 8 FT. CONCRETE CATCH BASIN. MONUMENT IS LOCATED IN THE SOUTHEASTERLY CORNER OF THE INTERSECTION OF FRUIT STREET AND THE ATCHINSON TOPEKA AND SANTA FE RAILROAD, 23 FT. EASTERLY OF THE CENTERLINE OF THE RAILWAY, 19.5 FT. SOUTHERLY OF THE CENTERLINE OF FRUIT STREET AND 14.3 FT. WEST OF A POWER POLE (#716815E"). ORANGE COUNTY SURVEYS, PUBLIC WORKS.

REGISTERED PROFESSIONAL ENGINEER — NEHA A. GAJJAR — No. 55574 — Exp. 12-31-18 — CIVIL — STATE OF CALIFORNIA

HNTB
The HNTB Companies
Infrastructure Solutions
200 E. Sandpointe Ave., Ste. 200
Santa Ana, CA 92707
Phone: 714-460-1600

PSOMAS
3 HUTTON CENTRE DRIVE, SUITE 200
SANTA ANA, CA 92707
(714) 751-7373 WWW.PSOMAS.COM

PREPARED UNDER THE SUPERVISION OF: NEHA GAJJAR — RCE NO.: 55574 — DATE: 12/2018

DESIGNED: MATTHEW VERA DRAWN: MATTHEW VERA CHECKED: NEHA GAJJAR — DATE: 10/2017

PUBLIC WORKS DEPARTMENT — Certified Community — Trees & Tradition — ARBOR DAY FOUNDATION

OCTA

DOWNTOWN ORANGE COUNTY — SANTA ANA

WN05

WATER IMPROVEMENT PLANS

OC STREETCAR

W 4TH STREET STA: 100+00 TO 108+38

BIRCH ST STA: 110+00 TO 110+33 AND BROADWAY STA: 120+00 TO 120+29

ORANGE COUNTY TRANSPORTATION AUTHORITY

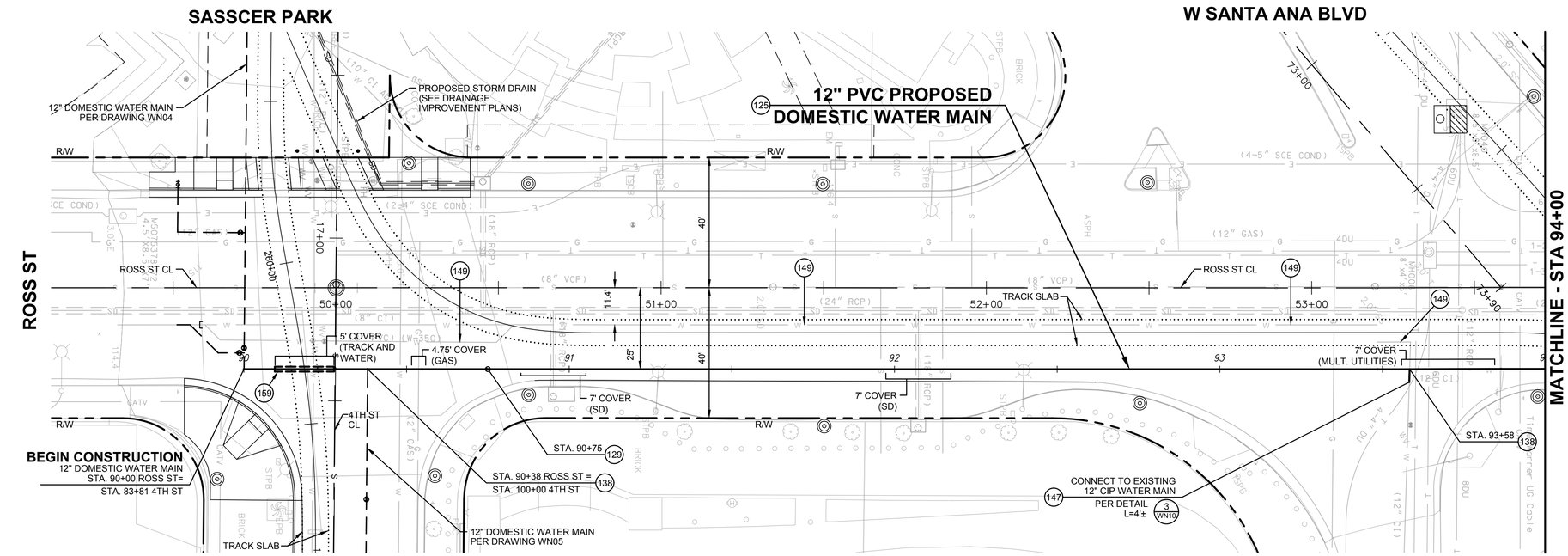

MATCHLINE - STA 94+00 SEE BELOW LEFT

WATER CONSTRUCTION NOTES

125 CONSTRUCT 12" AWWA C900 (DR14) PVC PIPE AND DI FITTINGS PER THE CITY OF SANTA ANA STD. PLAN NOs. 1150 AND 1420 (MODIFIED)

127 CONSTRUCT 8" AWWA C900 (DR14) PVC PIPE AND DI FITTINGS PER THE CITY OF SANTA ANA STD. PLAN NOs. 1150 AND 1420.

129 INSTALL 12" MJ GATE VALVE WITH VALVE ANCHOR PER THE CITY OF SANTA ANA STD. PLAN NO. 1410 AND 1419

131 INSTALL 8" MJ GATE VALVE PER THE CITY OF SANTA ANA STD. PLAN NO. 1410

135 INSTALL 8" DI 90° BEND AND THRUST BLOCK PER THE CITY OF SANTA ANA STD. PLAN NO. 1412.

136 INSTALL 8" DI 45° BEND AND THRUST BLOCK PER THE CITY OF SANTA ANA STD. PLAN NO. 1412.

138 INSTALL 12" DI TEE AND THRUST BLOCK PER THE CITY OF SANTA ANA STD. PLAN NO. 1412.

139 INSTALL 12"x8" DI TEE AND THRUST BLOCK PER THE CITY OF SANTA ANA STD. PLAN NO. 1412.

147 REMOVE AND DISPOSE OF INTERFERING PORTIONS OF EXISTING PIPE AND VALVES. CONNECT AND TIE-IN TO EXISTING WATER MAIN PER DETAIL NOTED ON PLANS.

148 CUT EXISTING WATERLINE, CAP AND ABANDON IN PLACE.

B 149 ABANDON EXISTING WATER MAIN IN PLACE. REMOVE AND DISPOSE OF INTERFERING PORTIONS OF EXISTING WATER MAIN INCLUDING VALVES AND APPURTENANCES. REMOVE VALVES PER SANTA ANA STD. PLAN NO. 1430. IF THE EXISTING MAIN TO BE ABANDONED IS LOCATED UNDERNEATH PROPOSED TRACK SLABS OR PLATFORMS, CONTRACTOR SHALL FILL MAIN WITH CLSM.

150 CONTRACTOR SHALL FIELD VERIFY THE SIZE AND LOCATION OF ALL SERVICES PRIOR TO REPLACEMENT/RECONNECTION. CONNECT TO EXISTING WATER SERVICE PER DETAIL 7 WN11

151 CONSTRUCT NEW WATER SERVICE FROM MAIN TO EXISTING WATER METER PER THE CITY OF SANTA ANA STD. PLAN NO. 1401 OR 1402 AND PER DETAIL 1 WN11

152 CONSTRUCT NEW WATER SERVICE AND NEW METER PER THE CITY OF SANTA ANA STD. PLAN NO. 1401 OR 1402 AND PER DETAIL 1 WN11

153 CONSTRUCT FIRE HYDRANT ASSEMBLY PER THE CITY OF SANTA ANA STD. PLAN NO. 1405.

159 INSTALL PVC CASING PER DETAIL 2 WN11

160 INSTALL STEEL CASING PER DETAIL 2 WN11

161 REMOVE AND SALVAGE EXISTING FIRE HYDRANT AND RETURN TO THE CITY OF SANTA ANA WATER RESOURCES DIVISION. REMOVE VALVE, VALVE BOX FRAME AND COVER PER SANTA ANA STD. PLAN NO. 1430.

(SCALE : 1" = 20')

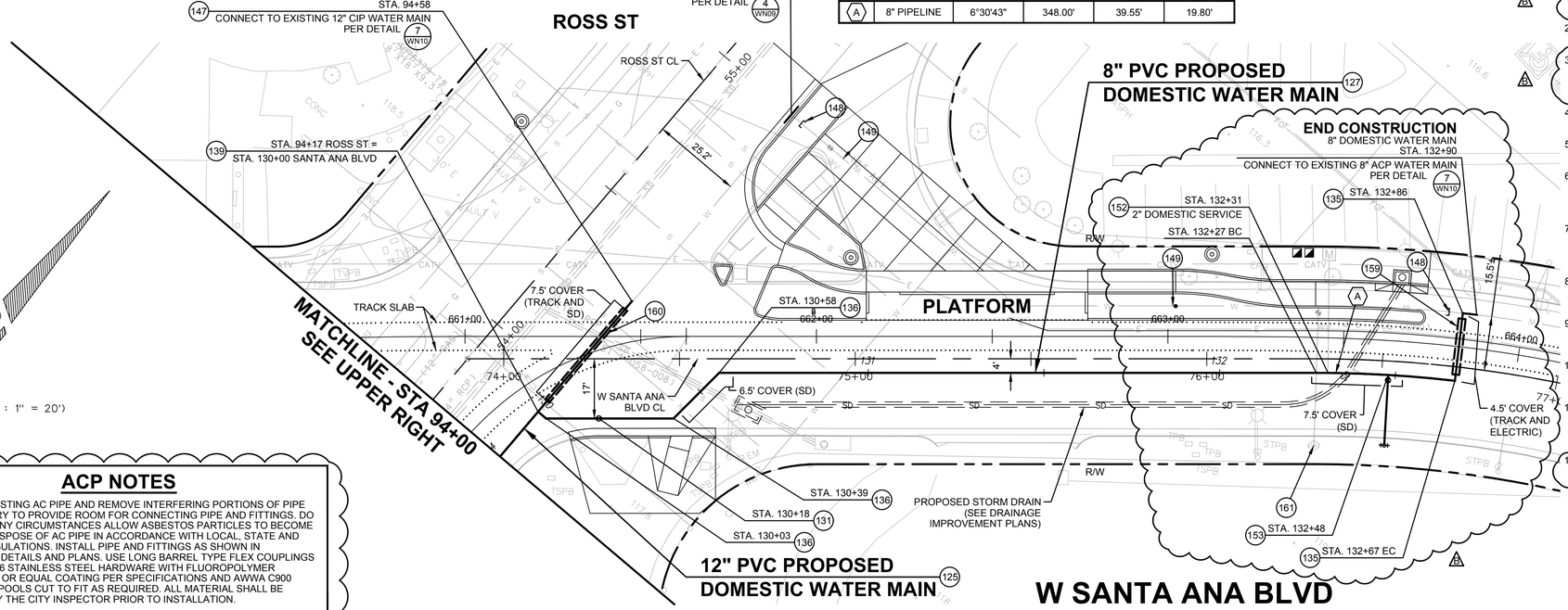

MATCHLINE - STA 94+00 SEE UPPER RIGHT

(SCALE : 1" = 20')

CURVE DATA					
NO.	DESCRIPTION	DELTA	RADIUS	LENGTH	TANGENT
A	8" PIPELINE	6°30'43"	348.00'	39.55'	19.80'

NOTES TO CONTRACTOR

A B 1. ALL BENDS 11 1/4° OR GREATER, TEES AND CROSSES SHALL BE DUCTILE IRON (CLASS 350) WITH PUSH-ON JOINTS UNLESS NOTED OTHERWISE.

2. DO NOT EXCEED 80% OF MANUFACTURER'S RECOMMENDED DEFLECTION REQUIREMENTS FOR PIPE INSTALLATION.

B 3. A MINIMUM COVER OF 36" SHALL BE MAINTAINED OVER CENTERLINE OF ALL PIPELINES UNLESS NOTED OTHERWISE, A MINIMUM COVER OF 48" SHALL BE MAINTAINED OVER CENTERLINE OF ALL PIPELINES WHEN CROSSING PROPOSED TRACKS UNLESS NOTED OTHERWISE.

4. A MINIMUM 12" CLEARANCE BETWEEN EXISTING UTILITIES AND PROPOSED PIPELINES SHALL BE MAINTAINED AT CROSSINGS UNLESS NOTED OTHERWISE.

5. CONTRACTOR SHALL VERIFY DEPTH, LOCATION AND DIMENSIONS OF EXISTING FACILITIES AND CONNECTION POINTS PRIOR TO CONSTRUCTION OF WATER MAINS.

6. ALL METALLIC FITTINGS, VALVES AND APPURTENANCES (INCLUDING VALVES, BOLTS, FLANGE JOINTS, JOINT HARNESSES, FLEXIBLE COUPLINGS, ETC.) SHALL BE COATED WITH WAX TAPE PER AWWA C217 AFTER ASSEMBLY. FLANGE COUPLING ADAPTERS MAY BE EPOXY COATED.

7. ALL COPPER TUBING SHALL BE PLACED IN 10-MIL POLYETHYLENE SLEEVES WITH BEDDING/BACKFILL OF A MINIMUM OF 2" THICK IMPORTED SAND (SE ≥ 30) PER DETAIL 1 WN11

8. ALL HORIZONTAL BENDS AND FITTINGS SHALL BE PLACED WITH THRUST BLOCKS PER CITY OF SANTA ANA STD. PLAN 1412. ALL VERTICAL BENDS SHALL BE PLACED WITH VERTICAL BEND ANCHOR BLOCKS PER CITY OF SANTA ANA STD. PLAN 1420.

9. THE CONTRACTOR SHALL CONTACT RICK BICKER OR TIM HATCH AT 714-577-5084 AT LEAST TWO (2) WORKING DAYS (MONDAY THROUGH THURSDAY) PRIOR TO STARTING ANY WORK IN THE VICINITY OF MWD FACILITIES.

10. CONTRACTOR TO REFERENCE UTILITY PLAN DRAWINGS CU01 TO CU29 FOR WATER SERVICE AND FIRE HYDRANT LATERAL RECONNECTIONS TO EXISTING WATER MAINS.

11. TO MEET COVERS NOTED IN PLANS, CONTRACTOR SHALL REFERENCE DETAIL 4 WN11 IF ADEQUATE SPACE IS NOT AVAILABLE, CONTRACTOR SHALL REFERENCE DETAIL 3 WN11 WITH INSPECTOR'S APPROVAL.

B 12. CONTRACTOR SHALL FILL EXISTING ABANDONED LINES LOCATED UNDERNEATH PROPOSED TRACK SLABS AND PLATFORMS WITH CLSM.

ACP NOTES

A B SNAP CUT EXISTING AC PIPE AND REMOVE INTERFERING PORTIONS OF PIPE AS NECESSARY TO PROVIDE ROOM FOR CONNECTING PIPE AND FITTINGS. DO NOT UNDER ANY CIRCUMSTANCES ALLOW ASBESTOS PARTICLES TO BECOME AIRBORNE. DISPOSE OF AC PIPE IN ACCORDANCE WITH LOCAL, STATE AND FEDERAL REGULATIONS. INSTALL PIPE AND FITTINGS AS SHOWN IN CONNECTION DETAILS AND PLANS. USE LONG BARREL TYPE FLEX COUPLINGS WITH TYPE 316 STAINLESS STEEL HARDWARE WITH FLUOROPOLYMER (TRIPAC 2000) OR EQUAL COATING PER SPECIFICATIONS AND AWWA C900 (DR14) PIPE SPOOLS CUT TO FIT AS REQUIRED. ALL MATERIAL SHALL BE APPROVED BY THE CITY INSPECTOR PRIOR TO INSTALLATION.

Underground Service Alert of Southern California
811 CALL: **TOLL FREE 1-800-422-4133**
TWO WORKING DAYS BEFORE YOU DIG

NOTICE TO CONTRACTOR

PURSUANT TO ASSEMBLY BILL 3019 NO EXCAVATION PERMIT IS VALID UNLESS THE CONTRACTOR CONTACTS AND OBTAINS AN INQUIRY I.D. NUMBER FROM "UNDERGROUND SERVICE ALERT" (1-800-422-4133) AT LEAST TWO WORKING DAYS PRIOR TO COMMENCING EXCAVATION.

CITY OF SANTA ANA PROJECT NO. 17-6766-C: OC STREETCAR FROM HARBOR BLVD TO SARTC

M:\PHNT0104OO\Public_Works\Sheets_wstr-Addendum\SHT-WN06-62481-R08.dwg 02/27/18 8:48am

SHT-WN06-62481-R08.DWG

FILE NO.:

REVISIONS

NUMBER	DATE	INITIALS	DESCRIPTION	APPROVED	INSTALLED
A	12/2017		ISSUE FOR BID		
B	03/08/18	NAG	PLAN AND NOTE REVISIONS		
			"SHEET" CHANGED TO "DRAWING"		

REFERENCES

BENCHMARK NO.: 3B-98-85 (PT. 400) ELEV.: 140.19 (NAVD 88)

FOUND 3.75" OCS ALUMINUM BENCHMARK DISK STAMPED "3B-98-5", SET IN THE NORTHWESTERLY CORNER OF A 4 FT. BY 8 FT. CONCRETE CATCH BASIN. MONUMENT IS LOCATED IN THE SOUTHEASTERLY CORNER OF THE INTERSECTION OF FRUIT STREET AND THE ATCHINSON TOPEKA AND SANTA FE RAILROAD, 23 FT. EASTERLY OF THE CENTERLINE OF THE RAILWAY, 19.5 FT. SOUTHERLY OF THE CENTERLINE OF FRUIT STREET AND 14.3 FT. WEST OF A POWER POLE (#716815E"). ORANGE COUNTY SURVEYS, PUBLIC WORKS.

REGISTERED PROFESSIONAL ENGINEER NEHA A. GAJJAR No. 55574 Exp. 12-31-18 CIVIL STATE OF CALIFORNIA

HNTB
The HNTB Companies
Infrastructure Solutions
200 E. Sandpointe Ave., Ste. 200
Santa Ana, CA 92707
Phone: 714-460-1600

PSOMAS
3 HUTTON CENTRE DRIVE, SUITE 200
SANTA ANA, CA 92707
(714) 751-7373 WWW.PSOMAS.COM

PREPARED UNDER THE SUPERVISION OF: NEHA GAJJAR		DATE
	RCE NO.: 55574	12/2018
DESIGNED: MATTHEW VERA DRAWN: MATTHEW VERA	CHECKED: NEHA GAJJAR	10/2017

WATER IMPROVEMENT PLANS

OC STREETCAR

ROSS STREET STA: 90+00 TO 94+58
SATNA ANA BLVD STA: 130+00 TO STA. 132+90

ORANGE COUNTY TRANSPORTATION AUTHORITY

WN06

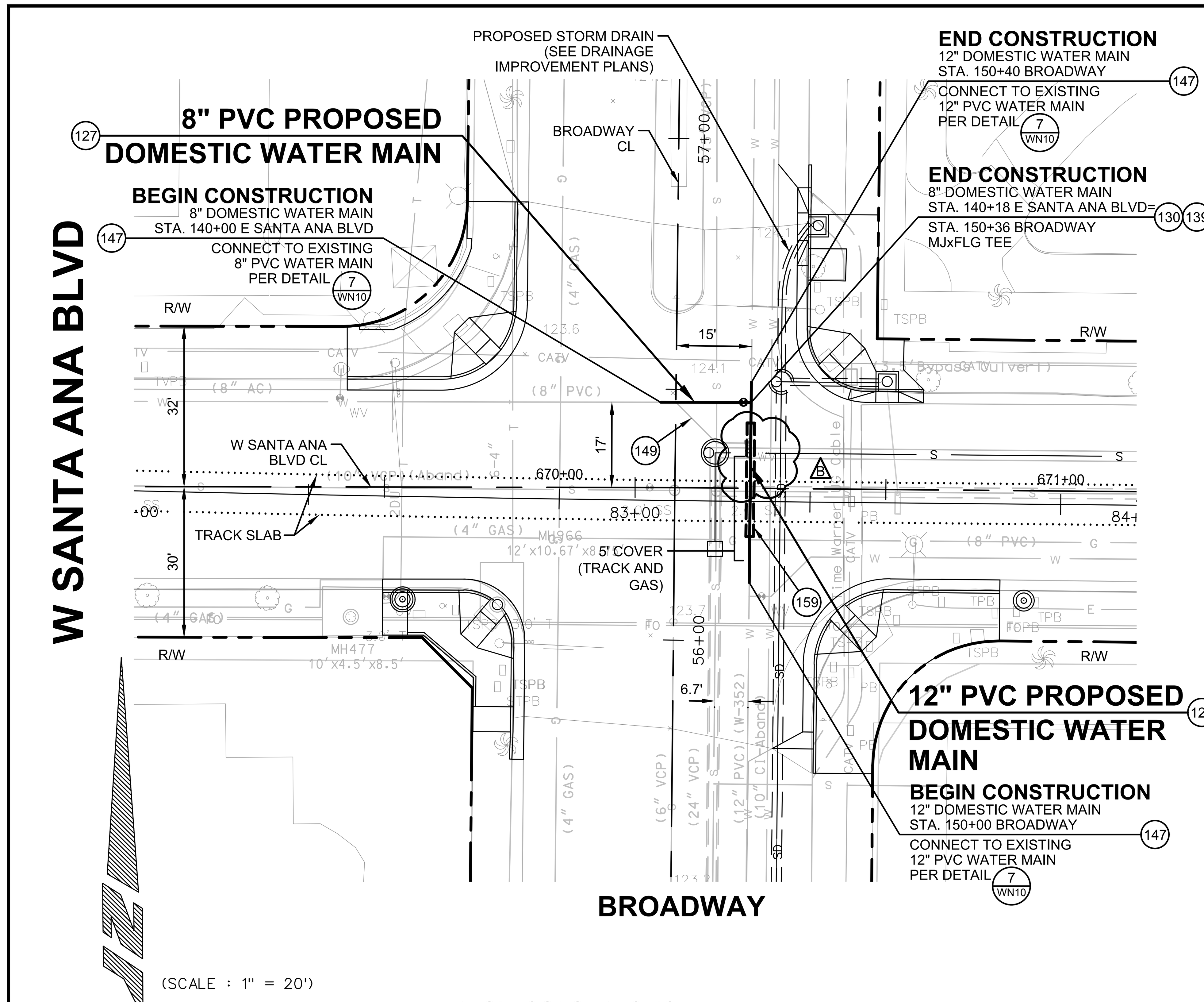

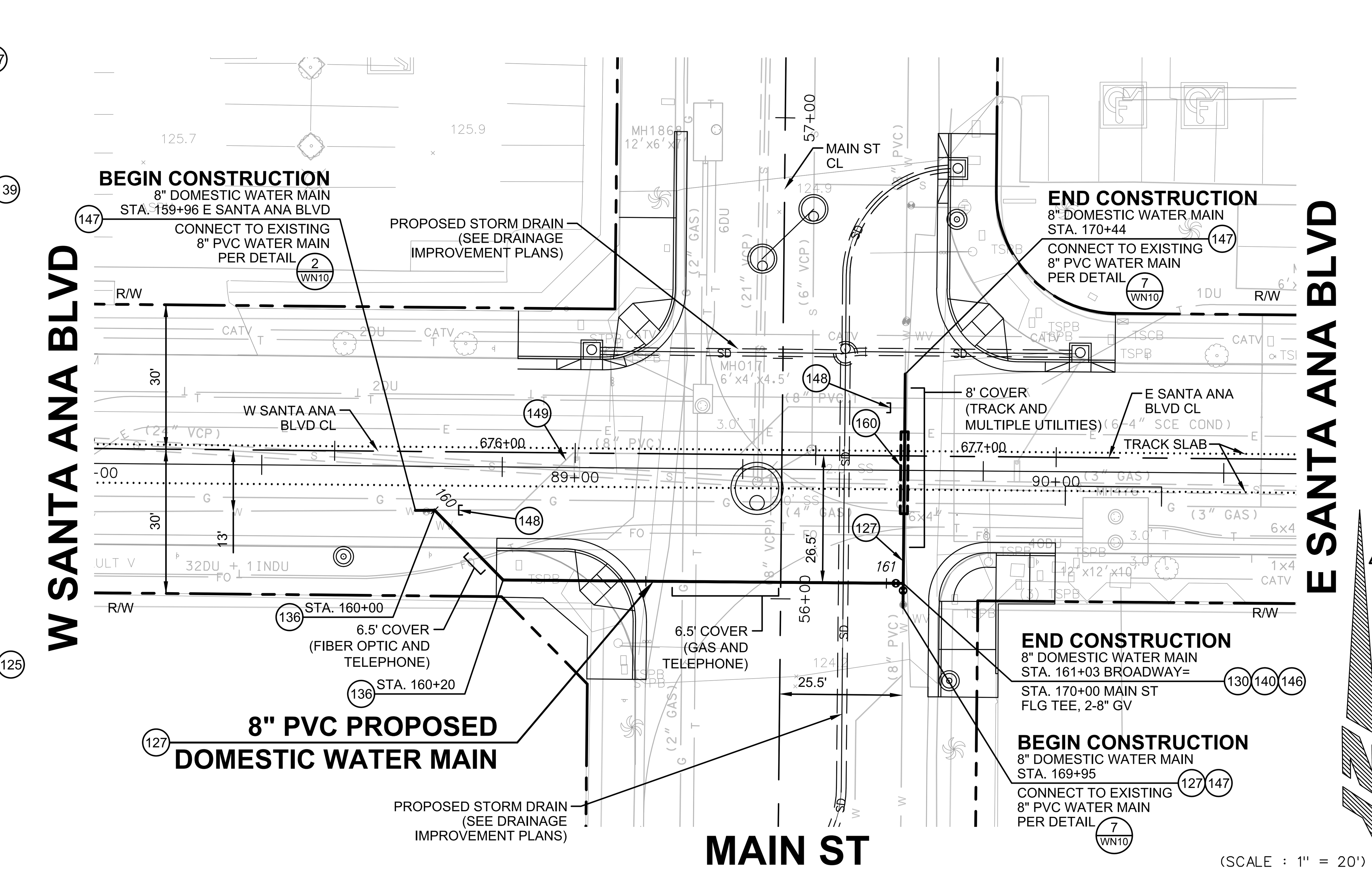

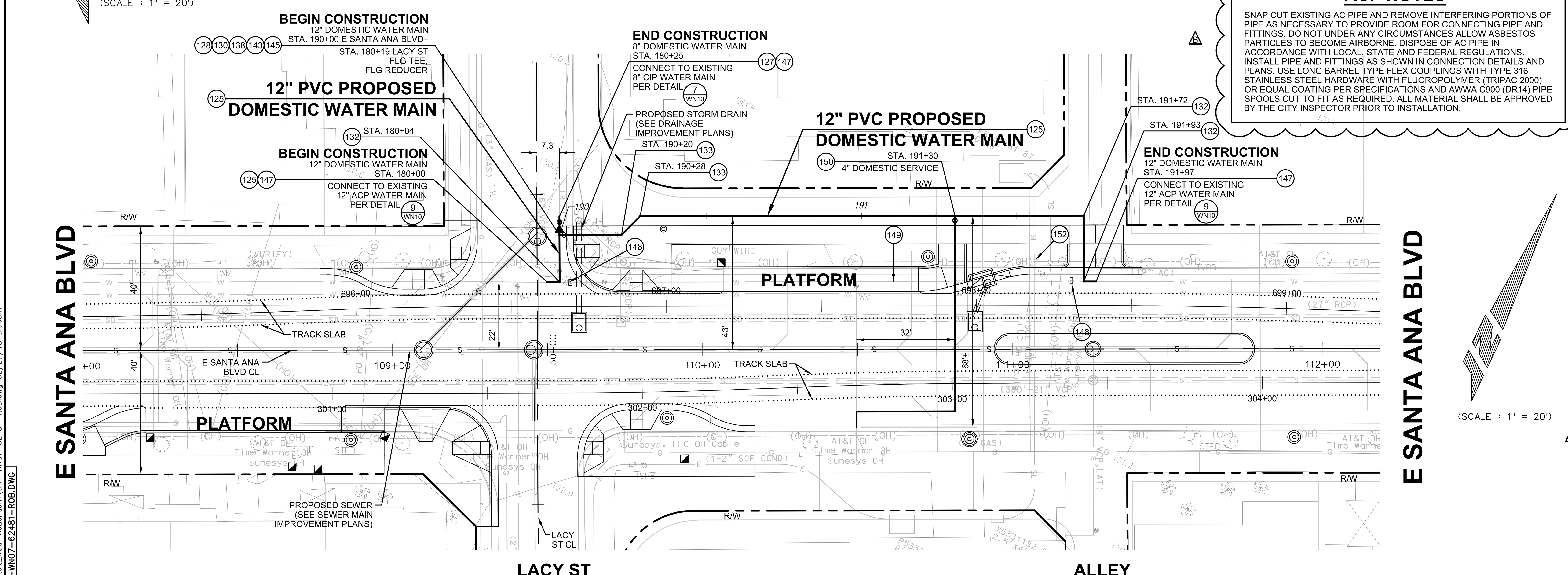

WATER CONSTRUCTION NOTES

- (125) CONSTRUCT 12" AWWA C900 (DR14) PVC PIPE AND DI FITTINGS PER THE CITY OF SANTA ANA STD. PLAN NOs. 1150 AND 1420.
- (127) CONSTRUCT 8" AWWA C900 (DR14) PVC PIPE AND DI FITTINGS PER THE CITY OF SANTA ANA STD. PLAN NOs. 1150 AND 1420.
- (128) INSTALL 12" FLGxMJ GATE VALVE PER THE CITY OF SANTA ANA STD. PLAN NO. 1410
- (130) INSTALL 8" FLGxMJ GATE VALVE PER THE CITY OF SANTA ANA STD. PLAN NO. 1410
- (132) INSTALL 12" DI 90° BEND AND THRUST BLOCK PER THE CITY OF SANTA ANA STD. PLAN NO. 1412.
- (133) INSTALL 12" DI 45° BEND AND THRUST BLOCK PER THE CITY OF SANTA ANA STD. PLAN NO. 1412.
- (136) INSTALL 8" DI 45° BEND AND THRUST BLOCK PER THE CITY OF SANTA ANA STD. PLAN NO. 1412.
- (138) INSTALL 12" DI TEE AND THRUST BLOCK PER THE CITY OF SANTA ANA STD. PLAN NO. 1412.
- (139) INSTALL 12"x8" DI TEE AND THRUST BLOCK PER THE CITY OF SANTA ANA STD. PLAN NO. 1412.
- (140) INSTALL 8" DI TEE AND THRUST BLOCK PER THE CITY OF SANTA ANA STD. PLAN NO. 1412.
- (143) INSTALL 12"x8" DI REDUCER
- (145) CONSTRUCT 12" DI FLGxPO ADAPTER.
- (146) CONSTRUCT 8" DI FLGxPO ADAPTER.
- (147) REMOVE AND DISPOSE OF INTERFERING PORTIONS OF EXISTING PIPE AND VALVES. CONNECT AND TIE-IN TO EXISTING WATER MAIN PER DETAIL NOTED ON PLANS.
- (148) CUT EXISTING WATERLINE, CAP AND ABANDON IN PLACE. (B)
- (149) ABANDON EXISTING WATER MAIN IN PLACE. REMOVE AND DISPOSE OF INTERFERING PORTIONS OF EXISTING WATER MAIN INCLUDING VALVES AND APPURTENANCES. REMOVE VALVES PER SANTA ANA STD. PLAN NO. 1430. IF THE EXISTING MAIN TO BE ABANDONED IS LOCATED UNDERNEATH PROPOSED TRACK SLABS OR PLATFORMS, CONTRACTOR SHALL FILL MAIN WITH CLSM.
- (150) CONTRACTOR SHALL FIELD VERIFY THE SIZE AND LOCATION OF ALL SERVICES PRIOR TO REPLACEMENT/RECONNECTION. CONNECT TO EXISTING WATER SERVICE PER DETAIL 7/WN11
- (151) CONSTRUCT NEW WATER SERVICE FROM MAIN TO EXISTING WATER METER PER THE CITY OF SANTA ANA STD. PLAN NO. 1401 OR 1402 AND PER DETAIL 1/WN11
- (152) CONSTRUCT NEW WATER SERVICE AND NEW METER PER THE CITY OF SANTA ANA STD. PLAN NO. 1401 OR 1402 AND PER DETAIL 1/WN11
- (159) INSTALL PVC CASING PER DETAIL 2/WN11
- (160) INSTALL STEEL CASING PER DETAIL 2/WN11

ACP NOTES

(B) SNAP CUT EXISTING AC PIPE AND REMOVE INTERFERING PORTIONS OF PIPE AS NECESSARY TO PROVIDE ROOM FOR CONNECTING PIPE AND FITTINGS. DO NOT UNDER ANY CIRCUMSTANCES ALLOW ASBESTOS PARTICLES TO BECOME AIRBORNE. DISPOSE OF AC PIPE IN ACCORDANCE WITH LOCAL, STATE AND FEDERAL REGULATIONS. INSTALL PIPE AND FITTINGS AS SHOWN IN CONNECTION DETAILS AND PLANS. USE LONG BARREL TYPE FLEX COUPLINGS WITH TYPE 316 STAINLESS STEEL HARDWARE WITH FLUOROPOLYMER (TRIPAC 2000) OR EQUAL COATING PER SPECIFICATIONS AND AWWA C900 (DR14) PIPE SPOOLS CUT TO FIT AS REQUIRED. ALL MATERIAL SHALL BE APPROVED BY THE CITY INSPECTOR PRIOR TO INSTALLATION.

NOTES TO CONTRACTOR

(B)

1. ALL BENDS 11 1/4° OR GREATER, TEES AND CROSSES SHALL BE DUCTILE IRON (CLASS 350) WITH PUSH-ON JOINTS UNLESS NOTED OTHERWISE.
2. DO NOT EXCEED 80% OF MANUFACTURER'S RECOMMENDED DEFLECTION REQUIREMENTS FOR PIPE INSTALLATION.
3. A MINIMUM COVER OF 36" SHALL BE MAINTAINED OVER CENTERLINE OF ALL PIPELINES UNLESS NOTED OTHERWISE. A MINIMUM COVER OF 48" SHALL BE MAINTAINED OVER CENTERLINE OF ALL PIPELINES WHEN CROSSING PROPOSED TRACKS UNLESS NOTED OTHERWISE.
4. (B) A MINIMUM 12" CLEARANCE BETWEEN EXISTING UTILITIES AND PROPOSED PIPELINES SHALL BE MAINTAINED AT CROSSINGS UNLESS NOTED OTHERWISE.
5. CONTRACTOR SHALL VERIFY DEPTH, LOCATION AND DIMENSIONS OF EXISTING FACILITIES AND CONNECTION POINTS PRIOR TO CONSTRUCTION OF WATER MAINS.
6. ALL METALLIC FITTINGS, VALVES AND APPURTENANCES (INCLUDING VALVES, BOLTS, FLANGE JOINTS, JOINT HARNESSES, FLEXIBLE COUPLINGS, ETC.) SHALL BE COATED WITH WAX TAPE PER AWWA C217 AFTER ASSEMBLY. FLANGE COUPLING ADAPTERS MAY BE EPOXY COATED.
7. ALL COPPER TUBING SHALL BE PLACED IN 10-MIL POLYETHYLENE SLEEVES WITH BEDDING/BACKFILL OF A MINIMUM OF 2" THICK IMPORTED SAND (SE ≥ 30) PER DETAIL 1/WN11
8. ALL HORIZONTAL BENDS AND FITTINGS SHALL BE PLACED WITH THRUST BLOCKS PER CITY OF SANTA ANA STD. PLAN 1412. ALL VERTICAL BENDS SHALL BE PLACED WITH VERTICAL BEND ANCHOR BLOCKS PER CITY OF SANTA ANA STD. PLAN 1420.
9. THE CONTRACTOR SHALL CONTACT RICK BICKER OR TIM HATCH AT 714-577-5084 AT LEAST TWO (2) WORKING DAYS (MONDAY THROUGH THURSDAY) PRIOR TO STARTING ANY WORK IN THE VICINITY OF MWD FACILITIES.
10. CONTRACTOR TO REFERENCE UTILITY PLAN DRAWINGS CU01 TO CU29 FOR WATER SERVICE AND FIRE HYDRANT LATERAL RECONNECTIONS TO EXISTING WATER MAINS.
11. TO MEET COVERS NOTED IN PLANS, CONTRACTOR SHALL REFERENCE DETAIL 4/WN11. IF ADEQUATE SPACE IS NOT AVAILABLE, CONTRACTOR SHALL REFERENCE DETAIL 3/WN11 WITH INSPECTOR'S APPROVAL.
12. (B) CONTRACTOR SHALL FILL EXISTING ABANDONED LINES LOCATED UNDERNEATH PROPOSED TRACK SLABS AND PLATFORMS WITH CLSM.

Underground Service Alert
of Southern California
811
CALL: **TOLL FREE 1-800-422-4133**
TWO WORKING DAYS
BEFORE YOU DIG

NOTICE TO CONTRACTOR

PURSUANT TO ASSEMBLY BILL 3019 NO EXCAVATION PERMIT IS VALID UNLESS THE CONTRACTOR CONTACTS AND OBTAINS AN INQUIRY I.D. NUMBER FROM "UNDER-GROUND SERVICE ALERT" (1-800-422-4133) AT LEAST TWO WORKING DAYS PRIOR TO COMMENCING EXCAVATION.

M:\2HNT010400\Public_Works\Sheets_watr-Addendum\SHT-WN07-62481-R0B.dwg 02/27/18 8:50am

FILE NO.: SHT-WN07-62481-R0B.DWG

REVISIONS

NUMBER	DATE	INITIALS	DESCRIPTION	APPROVED	INSTALLED
A	12/2017		ISSUE FOR BID		
B	03/08/18	NAG	PLAN AND NOTE REVISIONS		
			"SHEET" CHANGED TO "DRAWING"		

REFERENCES

BENCHMARK NO.: 3B-98-85 (PT. 400) ELEV.: 140.19 (NAVD 88)

FOUND 3.75" OCS ALUMINUM BENCHMARK DISK STAMPED "3B-98-5", SET IN THE NORTHWESTERLY CORNER OF A 4 FT. BY 8 FT. CONCRETE CATCH BASIN. MONUMENT IS LOCATED IN THE SOUTHEASTERLY CORNER OF THE INTERSECTION OF FRUIT STREET AND THE ATCHINSON TOPEKA AND SANTA FE RAILROAD, 23 FT. EASTERLY OF THE CENTERLINE OF THE RAILWAY, 19.5 FT. SOUTHERLY OF THE CENTERLINE OF FRUIT STREET AND 14.3 FT. WEST OF A POWER POLE (#716815E"). ORANGE COUNTY SURVEYS, PUBLIC WORKS.

REGISTERED PROFESSIONAL ENGINEER NEHA A. GAJJAR No. C55574 Exp. 12-31-18 CIVIL STATE OF CALIFORNIA

HNTB
The HNTB Companies
Infrastructure Solutions
200 E. Sandpointe Ave., Ste. 200
Santa Ana, CA 92707
Phone: 714-460-1600

PSOMAS
3 HUTTON CENTRE DRIVE, SUITE 200
SANTA ANA, CA 92707
(714) 751-7373 WWW.PSOMAS.COM

PREPARED UNDER THE SUPERVISION OF: NEHA GAJJAR | DATE
RCE NO.: 55574 | 12/2018
DESIGNED: MATTHEW VERA DRAWN: MATTHEW VERA CHECKED: NEHA GAJJAR | 10/2017

PUBLIC WORKS DEPARTMENT Garden Grove — OCTA — SANTA ANA

WN07

WATER IMPROVEMENT PLANS

OC STREETCAR

SANTA ANA BLVD STA: 140+00 TO 140+18, 159+96 TO 161+03 AND 190+00 TO 191+97
BROADWAY STA: 150+00 TO 150+40, MAIN ST STA: 169+95 TO 170+44 AND LACY ST STA: 180+00 TO 180+25

ORANGE COUNTY TRANSPORTATION AUTHORITY

CITY OF SANTA ANA PROJECT NO. 17-6766-C: OC STREETCAR FROM HARBOR BLVD TO SARTC

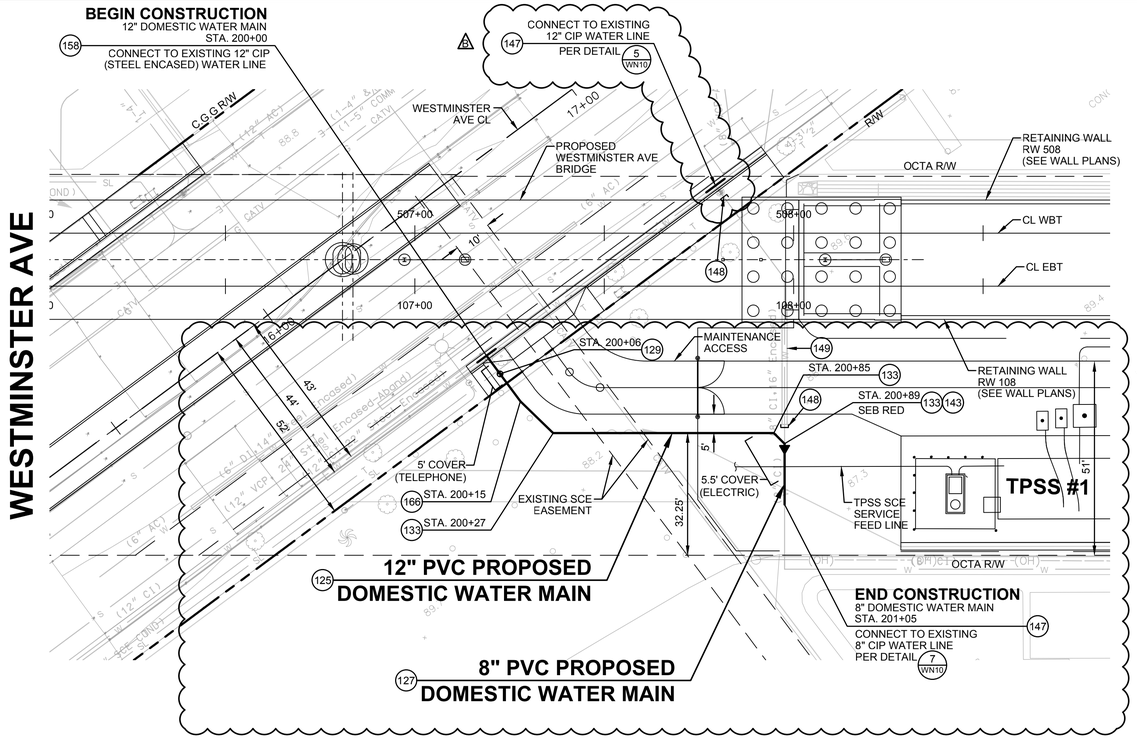

(SCALE : 1" = 20')

NOTES

THIS PROJECT AREA SHOWED HIGH SULFATE LEVELS IN SOILS. ALL THRUST BLOCKS INSTALLED IN THIS AREA SHALL CONSIST OF TYPE V SULFATE RESISTING CEMENT.

WATER CONSTRUCTION NOTES

125 CONSTRUCT 12" AWWA C900 (DR14) PVC PIPE AND DI FITTINGS PER THE CITY OF SANTA ANA STD. PLAN NOs. 1150 AND 1420.

127 CONSTRUCT 8" AWWA C900 (DR14) PVC PIPE AND DI FITTINGS PER THE CITY OF SANTA ANA STD. PLAN NOs. 1150 AND 1420.

129 INSTALL 12" MJ GATE VALVE WITH VALVE ANCHOR PER THE CITY OF SANTA ANA STD. PLAN NO. 1410 AND 1419

133 INSTALL 12" DI 45° BEND AND THRUST BLOCK PER THE CITY OF SANTA ANA STD. PLAN NO. 1412.

143 INSTALL 12"x8" DI REDUCER

147 REMOVE AND DISPOSE OF INTERFERING PORTIONS OF EXISTING PIPE AND VALVES. CONNECT AND TIE-IN TO EXISTING WATER MAIN PER DETAIL NOTED ON PLANS.

148 CUT EXISTING WATERLINE, CAP AND ABANDON IN PLACE.

A 149 ABANDON EXISTING WATER MAIN IN PLACE. REMOVE AND DISPOSE OF INTERFERING PORTIONS OF EXISTING WATER MAIN INCLUDING VALVES AND APPURTENANCES. REMOVE VALVES PER SANTA ANA STD. PLAN NO. 1430. IF THE EXISTING MAIN TO BE ABANDONED IS LOCATED UNDERNEATH PROPOSED TRACK SLABS OR PLATFORMS, CONTRACTOR SHALL FILL MAIN WITH CLSM.

156 CUT INTO EXISTING STEEL CASING AND CONNECT TO EXISTING WATER MAIN PER DETAIL 6 WN10

161 REMOVE AND SALVAGE EXISTING FIRE HYDRANT AND RETURN TO THE CITY OF SANTA ANA WATER RESOURCES DIVISION. REMOVE VALVE, VALVE BOX FRAME AND COVER PER SANTA ANA STD. PLAN NO. 1430.

163 REMOVE EXISTING FIRE HYDRANT AND RELOCATE WITH NEW FIRE HYDRANT PER DETAIL NOTED ON PLANS.

A 166 INSTALL 12" DI 11-1/4° BEND AND THRUST BLOCK PER THE CITY OF SANTA ANA STD. PLAN NO. 1412.

ACP NOTES

A SNAP CUT EXISTING AC PIPE AND REMOVE INTERFERING PORTIONS OF PIPE AS NECESSARY TO PROVIDE ROOM FOR CONNECTING PIPE AND FITTINGS. DO NOT UNDER ANY CIRCUMSTANCES ALLOW ASBESTOS PARTICLES TO BECOME AIRBORNE. DISPOSE OF AC PIPE IN ACCORDANCE WITH LOCAL, STATE AND FEDERAL REGULATIONS. INSTALL PIPE AND FITTINGS AS SHOWN IN CONNECTION DETAILS AND PLANS. USE LONG BARREL TYPE FLEX COUPLINGS WITH TYPE 316 STAINLESS STEEL HARDWARE WITH FLUOROPOLYMER (TRIPAC 2000) OR EQUAL COATING PER SPECIFICATIONS AND AWWA C900 (DR14) PIPE SPOOLS CUT TO FIT AS REQUIRED. ALL MATERIAL SHALL BE APPROVED BY THE CITY INSPECTOR PRIOR TO INSTALLATION.

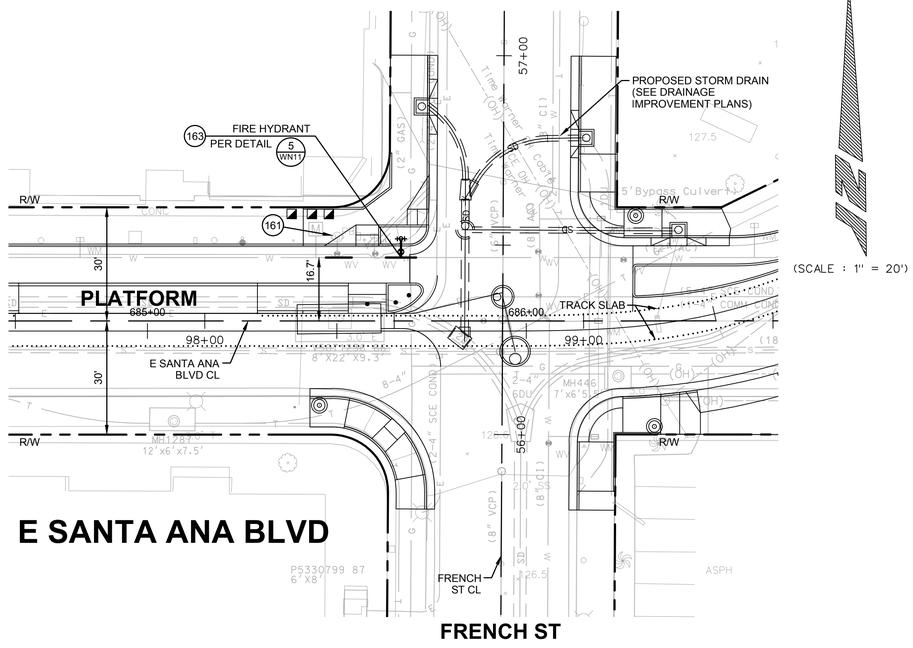

(SCALE : 1" = 20')

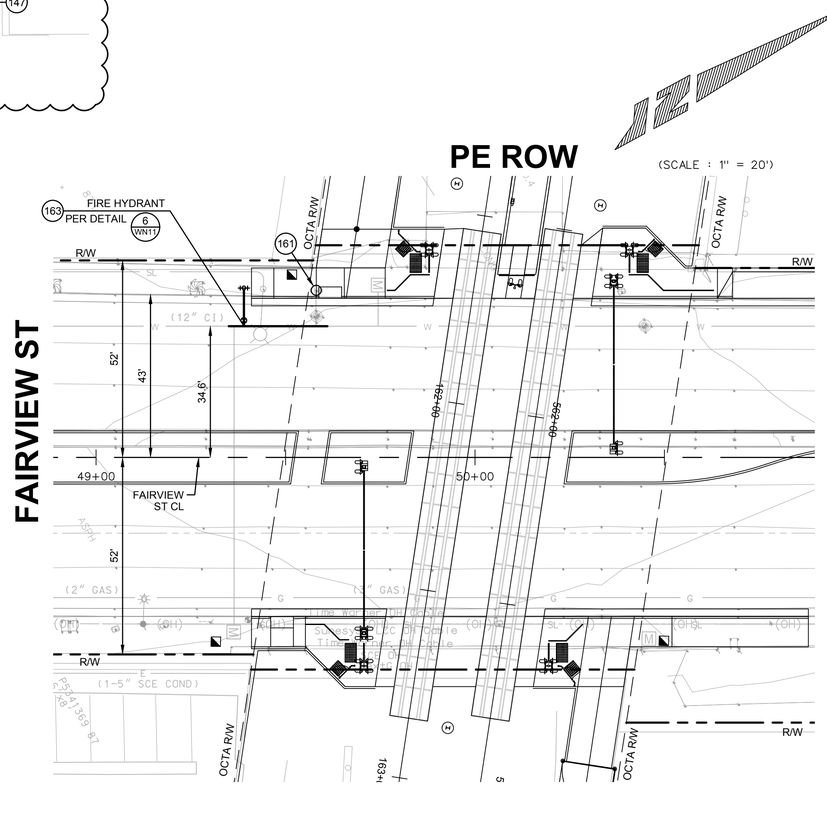

(SCALE : 1" = 20')

NOTES TO CONTRACTOR

A 1. ALL BENDS 11 1/4° OR GREATER, TEES AND CROSSES SHALL BE DUCTILE IRON (CLASS 350) WITH PUSH-ON JOINTS UNLESS NOTED OTHERWISE.

2. DO NOT EXCEED 80% OF MANUFACTURER'S RECOMMENDED DEFLECTION REQUIREMENTS FOR PIPE INSTALLATION.

A 3. A MINIMUM COVER OF 36" SHALL BE MAINTAINED OVER CENTERLINE OF ALL PIPELINES UNLESS NOTED OTHERWISE. A MINIMUM COVER OF 48" SHALL BE MAINTAINED OVER CENTERLINE OF ALL PIPELINES WHEN CROSSING PROPOSED TRACKS UNLESS NOTED OTHERWISE.

4. A MINIMUM 12" CLEARANCE BETWEEN EXISTING UTILITIES AND PROPOSED PIPELINES SHALL BE MAINTAINED AT CROSSINGS UNLESS NOTED OTHERWISE.

5. CONTRACTOR SHALL VERIFY DEPTH, LOCATION AND DIMENSIONS OF EXISTING FACILITIES AND CONNECTION POINTS PRIOR TO CONSTRUCTION OF WATER MAINS.

6. ALL METALLIC FITTINGS, VALVES AND APPURTENANCES (INCLUDING VALVES, BOLTS, FLANGE JOINTS, JOINT HARNESSES, FLEXIBLE COUPLINGS, ETC.) SHALL BE COATED WITH WAX TAPE PER AWWA C217 AFTER ASSEMBLY. FLANGE COUPLING ADAPTERS MAY BE EPOXY COATED.

7. ALL COPPER TUBING SHALL BE PLACED IN 10-MIL POLYETHYLENE SLEEVES WITH BEDDING/BACKFILL OF A MINIMUM OF 2" THICK IMPORTED SAND (SE ± 30) PER DETAIL 1 WN17

8. ALL HORIZONTAL BENDS AND FITTINGS SHALL BE PLACED WITH THRUST BLOCKS PER CITY OF SANTA ANA STD. PLAN 1412. ALL VERTICAL BENDS SHALL BE PLACED WITH VERTICAL BEND ANCHOR BLOCKS PER CITY OF SANTA ANA STD. PLAN 1420.

9. THE CONTRACTOR SHALL CONTACT RICK BICKER OR TIM HATCH AT 714-577-5084 AT LEAST TWO (2) WORKING DAYS (MONDAY THROUGH THURSDAY) PRIOR TO STARTING ANY WORK IN THE VICINITY OF MWD FACILITIES.

10. CONTRACTOR TO REFERENCE UTILITY PLAN DRAWINGS CU01 TO CU29 FOR WATER SERVICE AND FIRE HYDRANT LATERAL RECONNECTIONS TO EXISTING WATER MAINS.

11. TO MEET COVERS NOTED IN PLANS, CONTRACTOR SHALL REFERENCE DETAIL 4 WN17. IF ADEQUATE SPACE IS NOT AVAILABLE, CONTRACTOR SHALL REFERENCE DETAIL 3 WN17 WITH INSPECTOR'S APPROVAL.

A 12. CONTRACTOR SHALL FILL EXISTING ABANDONED LINES LOCATED UNDERNEATH PROPOSED TRACK SLABS AND PLATFORMS WITH CLSM.

Underground Service Alert
of Southern California
811
CALL: **TOLL FREE 1-800-422-4133**
TWO WORKING DAYS
BEFORE YOU DIG

NOTICE TO CONTRACTOR

PURSUANT TO ASSEMBLY BILL 3019 NO EXCAVATION PERMIT IS VALID UNLESS THE CONTRACTOR CONTACTS AND OBTAINS AN INQUIRY I.D. NUMBER FROM "UNDERGROUND SERVICE ALERT" (1-800-422-4133) AT LEAST TWO WORKING DAYS PRIOR TO COMMENCING EXCAVATION.

CITY OF SANTA ANA PROJECT NO. 17-6766-C: OC STREETCAR FROM HARBOR BLVD TO SARTC

M:\2HNT01040\Public_Work\Sheets_wotr-Addendum\SHT-WN08-62481-R08.dwg 02/27/18 8:51am

SHT-WN08-62481-R08.DWG

FILE NO.:

REVISIONS

NUMBER	DATE	INITIALS	DESCRIPTION	APPROVED	INSTALLED
A	12/2017		ISSUE FOR BID		
A	03/08/18	NAG	PLAN AND NOTE REVISIONS		
			"SHEET" CHANGED TO "DRAWING"		

REFERENCES

BENCHMARK NO.: 3B-98-85 (PT. 400) ELEV.: 140.19 (NAVD 88)

FOUND 3.75" OCS ALUMINUM BENCHMARK DISK STAMPED "3B-98-5", SET IN THE NORTHWESTERLY CORNER OF A 4 FT. BY 8 FT. CONCRETE CATCH BASIN. MONUMENT IS LOCATED IN THE SOUTHEASTERLY CORNER OF THE INTERSECTION OF FRUIT STREET AND THE ATCHINSON TOPEKA AND SANTA FE RAILROAD, 23 FT. EASTERLY OF THE CENTERLINE OF THE RAILWAY, 19.5 FT. SOUTHERLY OF THE CENTERLINE OF FRUIT STREET AND 14.3 FT. WEST OF A POWER POLE (#716815E"). ORANGE COUNTY SURVEYS, PUBLIC WORKS.

REGISTERED PROFESSIONAL ENGINEER NEHA A. GAJJAR No. 55574 Exp. 12-31-18 CIVIL STATE OF CALIFORNIA

HNTB
The HNTB Companies
Infrastructure Solutions
200 E. Sandpointe Ave., Ste. 200
Santa Ana, CA 92707
Phone: 714-460-1600

PSOMAS
3 HUTTON CENTRE DRIVE, SUITE 200
SANTA ANA, CA 92707
(714) 751-7373 WWW.PSOMAS.COM

PREPARED UNDER THE SUPERVISION OF: NEHA GAJJAR — DATE
RCE NO.: 55574 — 12/2018
DESIGNED: MATTHEW VERA DRAWN: MATTHEW VERA CHECKED: NEHA GAJJAR — 10/2017

WN08

WATER IMPROVEMENT PLANS
OC STREETCAR
A WESTMINSTER AVE STA. 200+00 TO STA. 201+05 AND FIRE HYDRANT LOCATIONS

ORANGE COUNTY TRANSPORTATION AUTHORITY

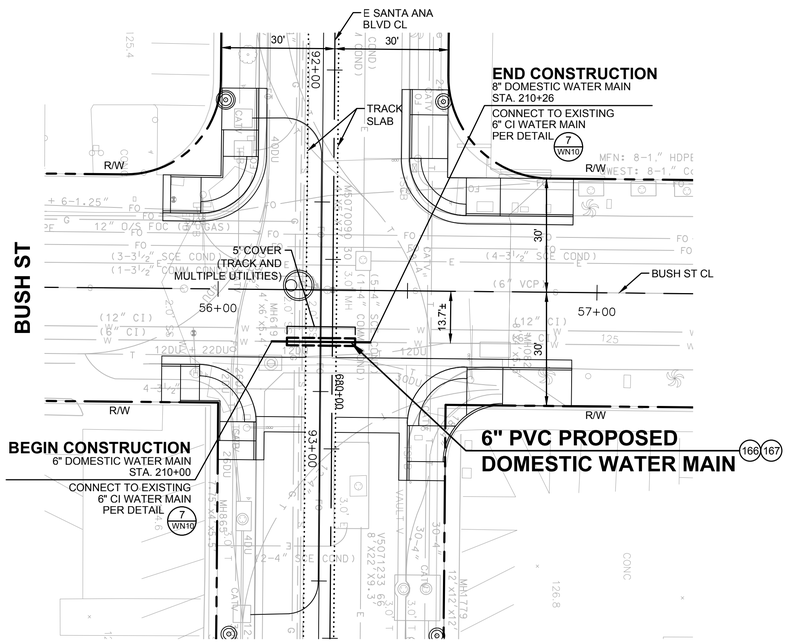

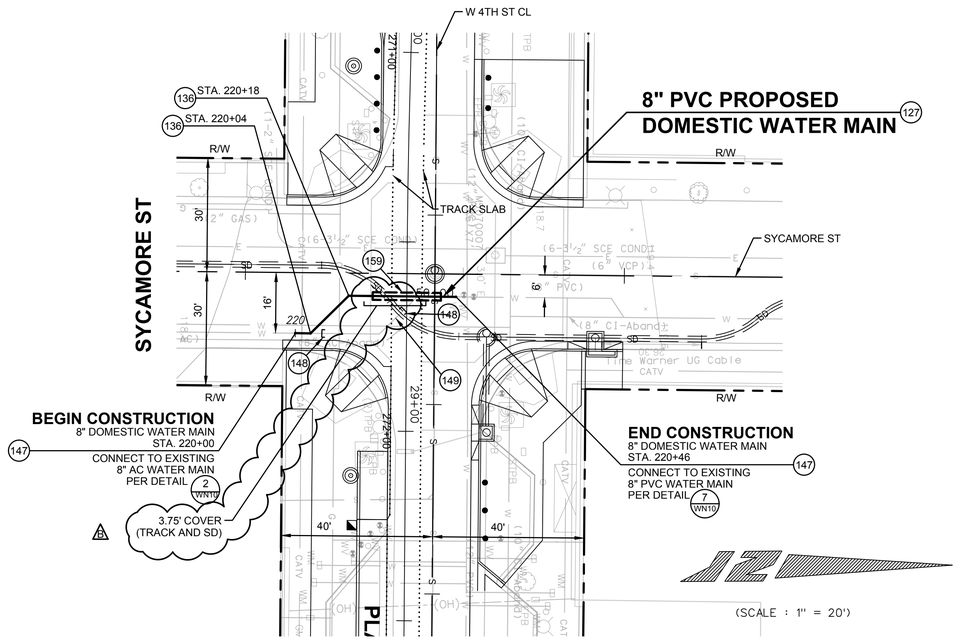

WATER CONSTRUCTION NOTES

125 CONSTRUCT 12" AWWA C900 (DR14) PVC PIPE AND DI FITTINGS PER THE CITY OF SANTA ANA STD. PLAN NOs. 1150 AND 1420.

127 CONSTRUCT 8" AWWA C900 (DR14) PVC PIPE AND DI FITTINGS PER THE CITY OF SANTA ANA STD. PLAN NOs. 1150 AND 1420.

128 INSTALL 12" FLGxMJ GATE VALVE PER THE CITY OF SANTA ANA STD. PLAN NO. 1410

129 INSTALL 12" MJ GATE VALVE WITH VALVE ANCHOR PER THE CITY OF SANTA ANA STD. PLAN NO. 1410 AND 1419

133 INSTALL 12" DI 45° BEND AND THRUST BLOCK PER THE CITY OF SANTA ANA STD. PLAN NO. 1412.

136 INSTALL 8" DI 45° BEND AND THRUST BLOCK PER THE CITY OF SANTA ANA STD. PLAN NO. 1412.

138 INSTALL 12" DI TEE AND THRUST BLOCK PER THE CITY OF SANTA ANA STD. PLAN NO. 1412.

147 REMOVE AND DISPOSE OF INTERFERING PORTIONS OF EXISTING PIPE AND VALVES. CONNECT AND TIE-IN TO EXISTING WATER MAIN PER DETAIL NOTED ON PLANS.

148 CUT EXISTING WATERLINE, CAP AND ABANDON IN PLACE.

A 149 ABANDON EXISTING WATER MAIN IN PLACE. REMOVE AND DISPOSE OF INTERFERING PORTIONS OF EXISTING WATER MAIN INCLUDING VALVES AND APPURTENANCES. REMOVE VALVES PER SANTA ANA STD. PLAN NO. 1430. IF THE EXISTING MAIN TO BE ABANDONED IS LOCATED UNDERNEATH PROPOSED TRACK SLABS OR PLATFORMS, CONTRACTOR SHALL FILL MAIN WITH CLSM.

159 INSTALL PVC CASING PER DETAIL 2 WN11

166 CONSTRUCT 6" AWWA C900 (DR14) PVC PIPE AND DI FITTINGS PER THE CITY OF SANTA ANA STD. PLAN NOs. 1150 AND 1420.

167 RELOCATE PROPOSED WATER MAIN VERTICALLY WITH PVC CASING PER DETAIL 2 WN11

ACP NOTES

A SNAP CUT EXISTING AC PIPE AND REMOVE INTERFERING PORTIONS OF PIPE AS NECESSARY TO PROVIDE ROOM FOR CONNECTING PIPE AND FITTINGS. DO NOT UNDER ANY CIRCUMSTANCES ALLOW ASBESTOS PARTICLES TO BECOME AIRBORNE. DISPOSE OF AC PIPE IN ACCORDANCE WITH LOCAL, STATE AND FEDERAL REGULATIONS. INSTALL PIPE AND FITTINGS AS SHOWN IN CONNECTION DETAILS AND PLANS. USE LONG BARREL TYPE FLEX COUPLINGS WITH TYPE 316 STAINLESS STEEL HARDWARE WITH FLUOROPOLYMER (TRIPAC 2000) OR EQUAL COATING PER SPECIFICATIONS AND AWWA C900 (DR14) PIPE SPOOLS CUT TO FIT AS REQUIRED. ALL MATERIAL SHALL BE APPROVED BY THE CITY INSPECTOR PRIOR TO INSTALLATION.

NOTES TO CONTRACTOR

A B 1. ALL BENDS 11 1/4° OR GREATER, TEES AND CROSSES SHALL BE DUCTILE IRON (CLASS 350) WITH PUSH-ON JOINTS UNLESS NOTED OTHERWISE.

2. DO NOT EXCEED 80% OF MANUFACTURER'S RECOMMENDED DEFLECTION REQUIREMENTS FOR PIPE INSTALLATION.

A B 3. A MINIMUM COVER OF 36" SHALL BE MAINTAINED OVER CENTERLINE OF ALL PIPELINES UNLESS NOTED OTHERWISE. A MINIMUM COVER OF 48" SHALL BE MAINTAINED OVER CENTERLINE OF ALL PIPELINES WHEN CROSSING PROPOSED TRACKS UNLESS NOTED OTHERWISE.

4. A MINIMUM 12" CLEARANCE BETWEEN EXISTING UTILITIES AND PROPOSED PIPELINES SHALL BE MAINTAINED AT CROSSINGS UNLESS NOTED OTHERWISE.

5. CONTRACTOR SHALL VERIFY DEPTH, LOCATION AND DIMENSIONS OF EXISTING FACILITIES AND CONNECTION POINTS PRIOR TO CONSTRUCTION OF WATER MAINS.

6. ALL METALLIC FITTINGS, VALVES AND APPURTENANCES (INCLUDING VALVES, BOLTS, FLANGE JOINTS, JOINT HARNESSES, FLEXIBLE COUPLINGS, ETC.) SHALL BE COATED WITH WAX TAPE PER AWWA C217 AFTER ASSEMBLY. FLANGE COUPLING ADAPTERS MAY BE EPOXY COATED.

7. ALL COPPER TUBING SHALL BE PLACED IN 10-MIL POLYETHYLENE SLEEVES WITH BEDDING/BACKFILL OF A MINIMUM OF 2" THICK IMPORTED SAND (SE ≥ 30) PER DETAIL 1 WN11

8. ALL HORIZONTAL BENDS AND FITTINGS SHALL BE PLACED WITH THRUST BLOCKS PER CITY OF SANTA ANA STD. PLAN 1412. ALL VERTICAL BENDS SHALL BE PLACED WITH VERTICAL BEND ANCHOR BLOCKS PER CITY OF SANTA ANA STD. PLAN 1420.

9. THE CONTRACTOR SHALL CONTACT RICK BICKER OR TIM HATCH AT 714-577-5084 AT LEAST TWO (2) WORKING DAYS (MONDAY THROUGH THURSDAY) PRIOR TO STARTING ANY WORK IN THE VICINITY OF MWD FACILITIES.

10. CONTRACTOR TO REFERENCE UTILITY PLAN DRAWINGS CU01 TO CU29 FOR WATER SERVICE AND FIRE HYDRANT LATERAL RECONNECTIONS TO EXISTING WATER MAINS.

11. TO MEET COVERS NOTED IN PLANS, CONTRACTOR SHALL REFERENCE DETAIL 4 WN11. IF ADEQUATE SPACE IS NOT AVAILABLE, CONTRACTOR SHALL REFERENCE DETAIL 3 WN11 WITH INSPECTOR'S APPROVAL.

A B 12. CONTRACTOR SHALL FILL EXISTING ABANDONED LINES LOCATED UNDERNEATH PROPOSED TRACK SLABS AND PLATFORMS WITH CLSM.

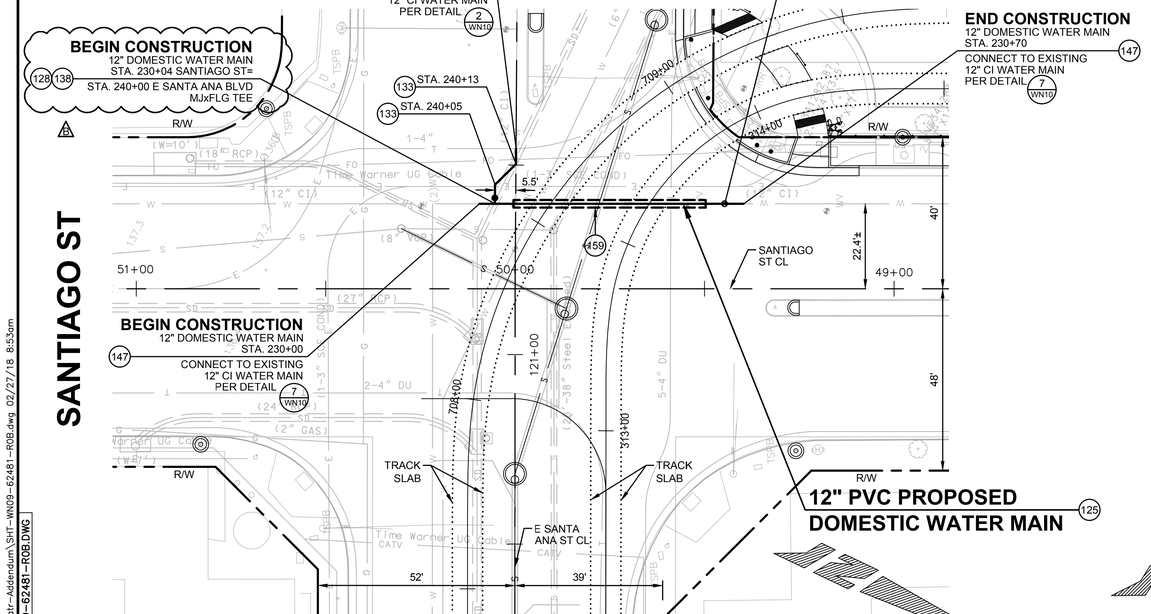

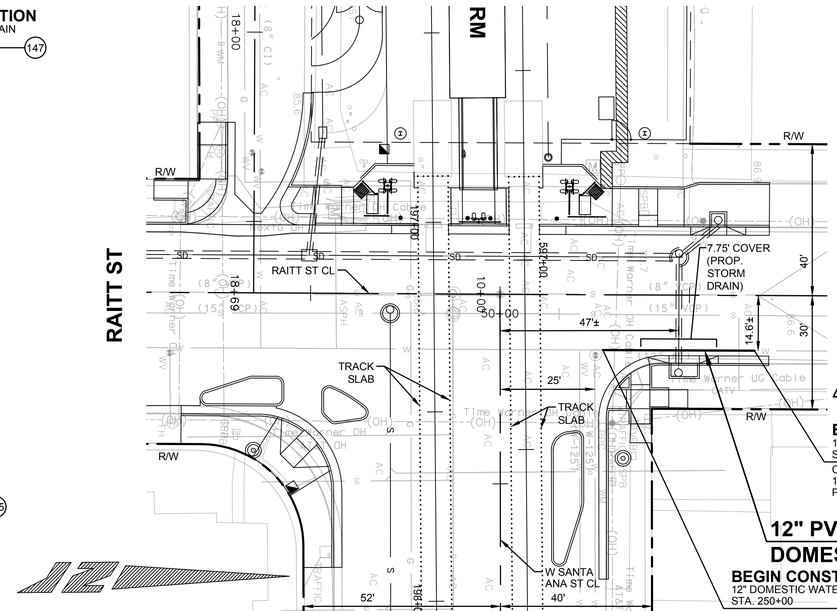

Underground Service Alert of Southern California
811 CALL: TOLL FREE 1-800-422-4133
TWO WORKING DAYS BEFORE YOU DIG

NOTICE TO CONTRACTOR

PURSUANT TO ASSEMBLY BILL 3019 NO EXCAVATION PERMIT IS VALID UNLESS THE CONTRACTOR CONTACTS AND OBTAINS AN INQUIRY I.D. NUMBER FROM "UNDERGROUND SERVICE ALERT" (1-800-422-4133) AT LEAST TWO WORKING DAYS PRIOR TO COMMENCING EXCAVATION.

FILE NO.:

REVISIONS

NUMBER	DATE	INITIALS	DESCRIPTION	APPROVED	INSTALLED
A	12/2017		ISSUE FOR BID		
A B	03/08/18	NAG	PLAN AND NOTE REVISIONS		
			"SHEET" CHANGED TO "DRAWING"		

REFERENCES

BENCHMARK NO.: 3B-98-85 (PT. 400) ELEV.: 140.19 (NAVD 88)

FOUND 3.75" OCS ALUMINUM BENCHMARK DISK STAMPED "3B-98-5", SET IN THE NORTHWESTERLY CORNER OF A 4 FT. BY 8 FT. CONCRETE CATCH BASIN. MONUMENT IS LOCATED IN THE SOUTHEASTERLY CORNER OF THE INTERSECTION OF FRUIT STREET AND THE ATCHINSON TOPEKA AND SANTA FE RAILROAD, 23 FT. EASTERLY OF THE CENTERLINE OF THE RAILWAY, 19.5 FT. SOUTHERLY OF THE CENTERLINE OF FRUIT STREET AND 14.3 FT. WEST OF A POWER POLE (#716815E"). ORANGE COUNTY SURVEYS, PUBLIC WORKS.

REGISTERED PROFESSIONAL ENGINEER — NEHA A. GAJJAR — No. 55574 — Exp. 12-31-18 — CIVIL — STATE OF CALIFORNIA

HNTB — The HNTB Companies Infrastructure Solutions — 200 E. Sandpointe Ave., Ste. 200, Santa Ana, CA 92707, Phone: 714-460-1600

PSOMAS — 3 HUTTON CENTRE DRIVE, SUITE 200, SANTA ANA, CA 92707, (714) 751-7373 WWW.PSOMAS.COM

PREPARED UNDER THE SUPERVISION OF: NEHA GAJJAR — RCE NO.: 55574 — DATE: 12/2018

DESIGNED: MATTHEW VERA DRAWN: MATTHEW VERA CHECKED: NEHA GAJJAR — DATE: 10/2017

PUBLIC WORKS DEPARTMENT — CERTIFIED CITY — YEARS OF EXCELLENCE — ANAHEIM

OCTA

DOWNTOWN ORANGE COUNTY — SANTA ANA

WN09

WATER IMPROVEMENT PLANS

OC STREETCAR

BUSH ST STA: 210+00 TO 210+26, SYCAMORE ST STA: 220+00 TO 220+46, SANTIAGO ST STA: 230+00 TO 230+70, AND SANTA ANA BLVD STA: 240+00 TO 240+17, RAITT ST STA: 250+00 TO 250+40

ORANGE COUNTY TRANSPORTATION AUTHORITY

CITY OF SANTA ANA PROJECT NO. 17-6766-C: OC STREETCAR FROM HARBOR BLVD TO SARTC

M:\2INT01040\Public_Works\Sheets_wotr-Addendum\SHT-WN09-62481-R0B.dwg 02/27/18 8:53am

SHT-WN09-62481-R0B.DWG

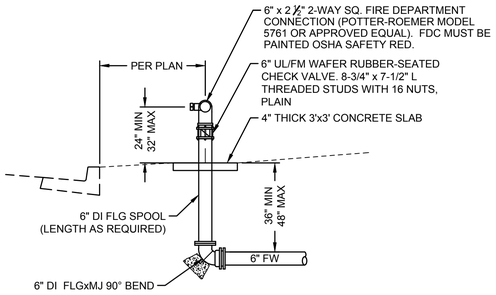

FIRE DEPARTMENT CONNECTION 1
NOT TO SCALE

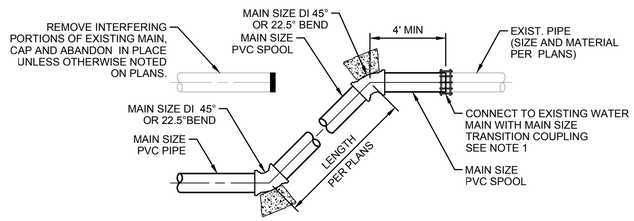

TYPICAL WATER MAIN RECONNECTION 2
NOT TO SCALE

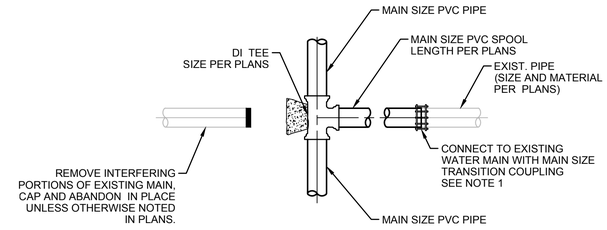

TYPICAL WATER MAIN RECONNECTION 3
NOT TO SCALE

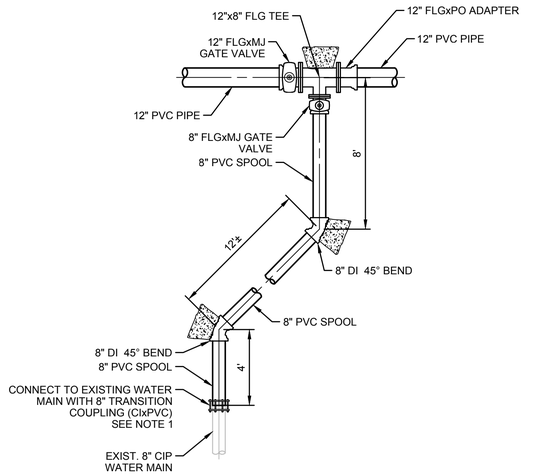

WATER MAIN RECONNECTION 4
NOT TO SCALE

WATER MAIN RECONNECTION 5
NOT TO SCALE

WATER MAIN RECONNECTION 6
NOT TO SCALE

TYPICAL WATER MAIN RECONNECTION 7
NOT TO SCALE

WATER MAIN RECONNECTION 8
NOT TO SCALE

TYPICAL WATER MAIN RECONNECTION 9
NOT TO SCALE

NOT USED 10
NOT TO SCALE

NOTE:

1. AN MJ DI SLEEVE SHALL BE USED WHEN EXISTING PIPE IS PVC OR DUCTILE IRON. IF EXISTING PIPE IS ACP, INSTALL LONG BODY FLEXIBLE TRANSITION COUPLING IN LIEU OF MJ SLEEVE.
2. ALL HORIZONTAL BENDS SHALL BE PLACED WITH THRUST BLOCKS PER CITY OF SANTA ANA STD. PLAN 1412. ALL VERTICAL BENDS SHALL BE PLACED WITH VERTICAL BEND ANCHOR BLOCKS PER CITY OF SANTA ANA STD. PLAN 1420.

Underground Service Alert
of Southern California
CALL: **TOLL FREE 1-800-422-4133**
TWO WORKING DAYS BEFORE YOU DIG

NOTICE TO CONTRACTOR

PURSUANT TO ASSEMBLY BILL 3019 NO EXCAVATION PERMIT IS VALID UNLESS THE CONTRACTOR CONTACTS AND OBTAINS AN INQUIRY I.D. NUMBER FROM "UNDERGROUND SERVICE ALERT" (1-800-422-4133) AT LEAST TWO WORKING DAYS PRIOR TO COMMENCING EXCAVATION.

FILE NO.:

REVISIONS

NUMBER	DATE	INITIALS	DESCRIPTION	APPROVED	INSTALLED
A	12/2017		ISSUE FOR BID		
B	03/08/18	NAG	DETAIL REMOVED		

REFERENCES

BENCHMARK NO.: 3B-98-85 (PT. 400) ELEV.: 140.19 (NAVD 88)

FOUND 3.75" OCS ALUMINUM BENCHMARK DISK STAMPED "3B-98-5", SET IN THE NORTHWESTERLY CORNER OF A 4 FT. BY 8 FT. CONCRETE CATCH BASIN. MONUMENT IS LOCATED IN THE SOUTHEASTERLY CORNER OF THE INTERSECTION OF FRUIT STREET AND THE ATCHINSON TOPEKA AND SANTA FE RAILROAD, 23 FT. EASTERLY OF THE CENTERLINE OF THE RAILWAY, 19.5 FT. SOUTHERLY OF THE CENTERLINE OF FRUIT STREET AND 14.3 FT. WEST OF A POWER POLE (#716815E"). ORANGE COUNTY SURVEYS, PUBLIC WORKS.

REGISTERED PROFESSIONAL ENGINEER — NEHA A. GAJJAR — No. 55574 — Exp. 12-31-18 — CIVIL — STATE OF CALIFORNIA

HNTB
The HNTB Companies
Infrastructure Solutions
200 E. Sandpointe Ave., Ste. 200
Santa Ana, CA 92707
Phone: 714-460-1600

PSOMAS
3 HUTTON CENTRE DRIVE, SUITE 200
SANTA ANA, CA 92707
(714) 751-7373 WWW.PSOMAS.COM

PREPARED UNDER THE SUPERVISION OF: NEHA GAJJAR — DATE
RCE NO.: 55574 — 12/2018
DESIGNED: MATTHEW VERA DRAWN: MATTHEW VERA CHECKED: NEHA GAJJAR — 10/2017

WATER IMPROVEMENT PLANS
OC STREETCAR
MISCELLANEOUS DETAILS

WN10

ORANGE COUNTY TRANSPORTATION AUTHORITY

CITY OF SANTA ANA PROJECT NO. 17-6766-C: OC STREETCAR FROM HARBOR BLVD TO SARTC

M:\2\INT01040\Public_Works\Sheets_watr-Addendum\SHT-WN10-62481-ROB.dwg 02/27/18 8:53am
SHT-WN10-62481-ROB.DWG

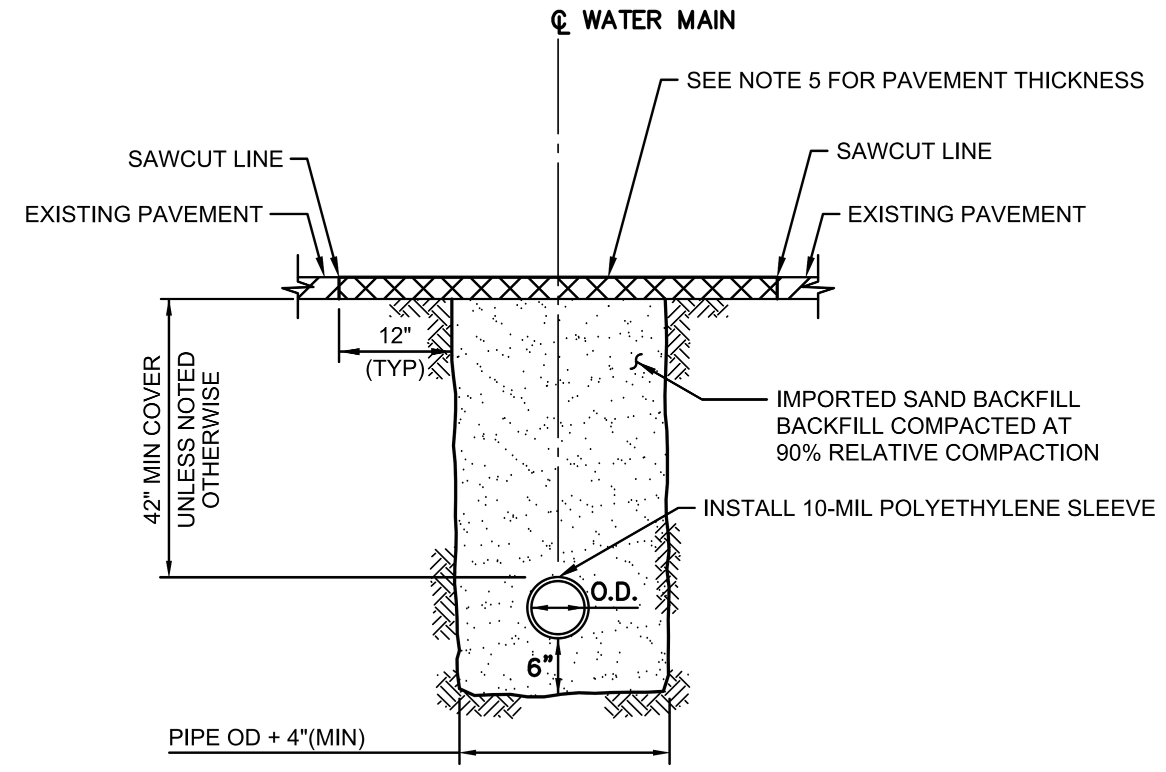

TRENCH DETAIL NOTES:

1. ALL EXCAVATIONS AND TRENCHES SHALL BE IN ACCORDANCE WITH THE CALIFORNIA DEPARTMENT OF INDUSTRIAL RELATIONS (CAL/OSHA) CODE OF REGULATIONS TITLE 8, CHAPTER 4 DIVISION OF INDUSTRIAL SAFETY, SUBCHAPTER 4 CONSTRUCTION SAFETY ORDERS..
2. IF WET SOILS ARE ENCOUNTERED AT BOTTOM OF EXCAVATION, CONTRACTOR SHALL EXCAVATE 12" BENEATH THE PIPE INVERT AND PLACE 6" OF CRUSHED ROCK (PER SSPWC SECTION 200-1.2) TO STABILIZE THE EXCAVATION BOTTOM PRIOR TO BEDDING AND PIPELINE PLACEMENT.
3. BEDDING AND BACKFILL SHALL BE IMPORTED SAND (SE≥30) AT LEAST 2" THICK SURROUNDING THE TUBING. SAND SHALL BE JETTED WITH WATER TO ENSURE FILLING OF VOIDS AND COMPACTED TO A MINIMUM RELATIVE COMPACTION OF 90%.
4. CONTRACTOR SHALL EITHER BACKFILL OPEN TRENCHES AND HAVE 3" TEMPORARY PAVEMENT INSTALLED AT THE END OF EACH WORK DAY OR SHALL INSTALL AND MAINTAIN STEEL TRAFFIC PLATES. NO OPEN TRENCHES ALLOWED DURING NON-WORKING HOURS.
5. REPAVE WITH AC TO MATCH FINISHED SURFACE OF EXISTING PAVEMENT. REPLACE EXISTING AC PAVEMENT WITH EXISTING SECTION THICKNESS PLUS 1" OR 12" THICK AC, WHICHEVER IS GREATER. CONTRACTOR MAY REFERENCE POTHOLE REPORT FOR TYPICAL PAVEMENT THICKNESS.

COPPER SERVICE TRENCH DETAIL 1/—
NOT TO SCALE

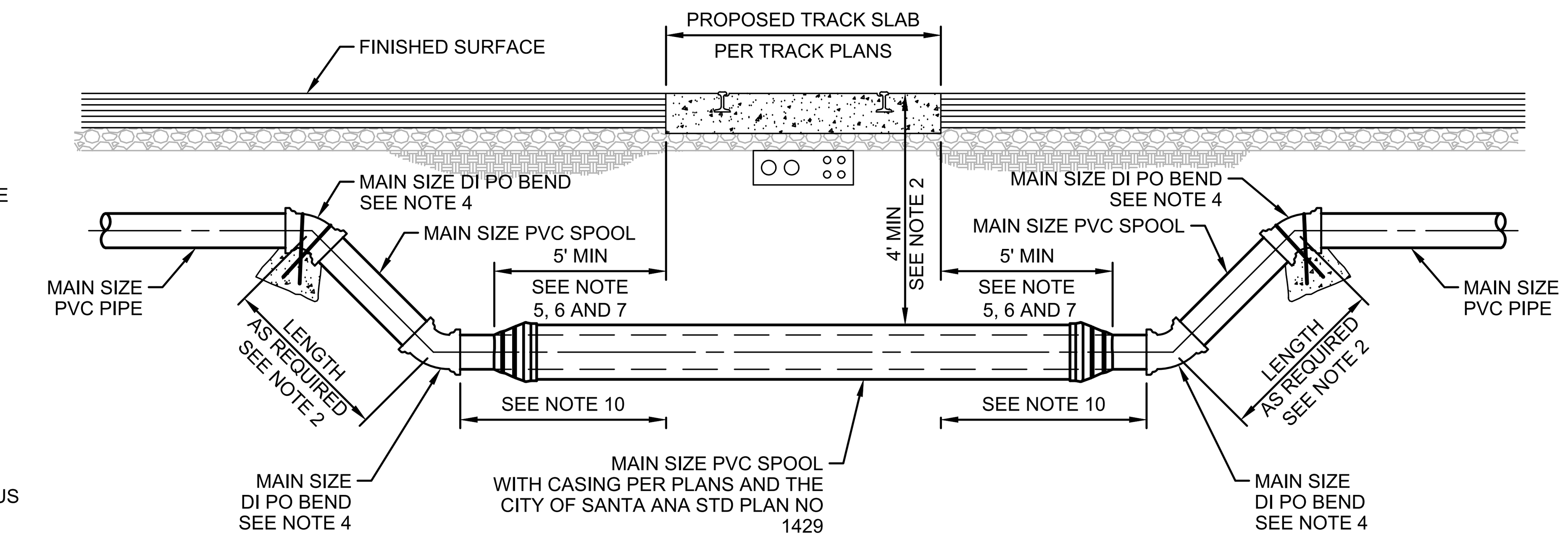

TYPICAL CASING/TRACK CROSSING 2/—
NOT TO SCALE

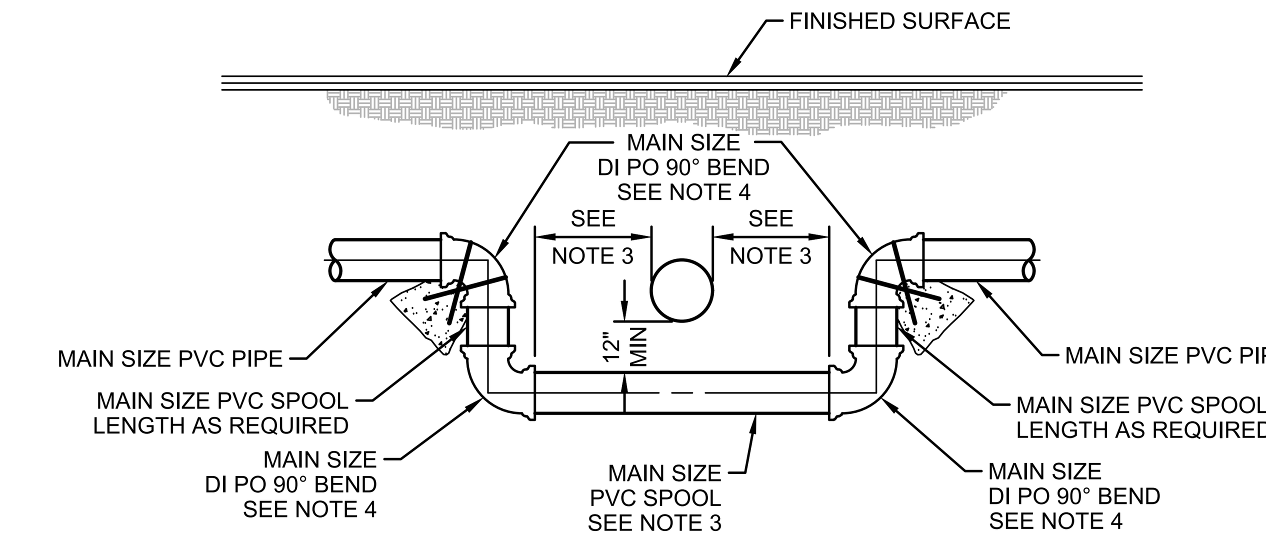

TYPICAL 90° VERTICAL OFFSET 3/—
NOT TO SCALE

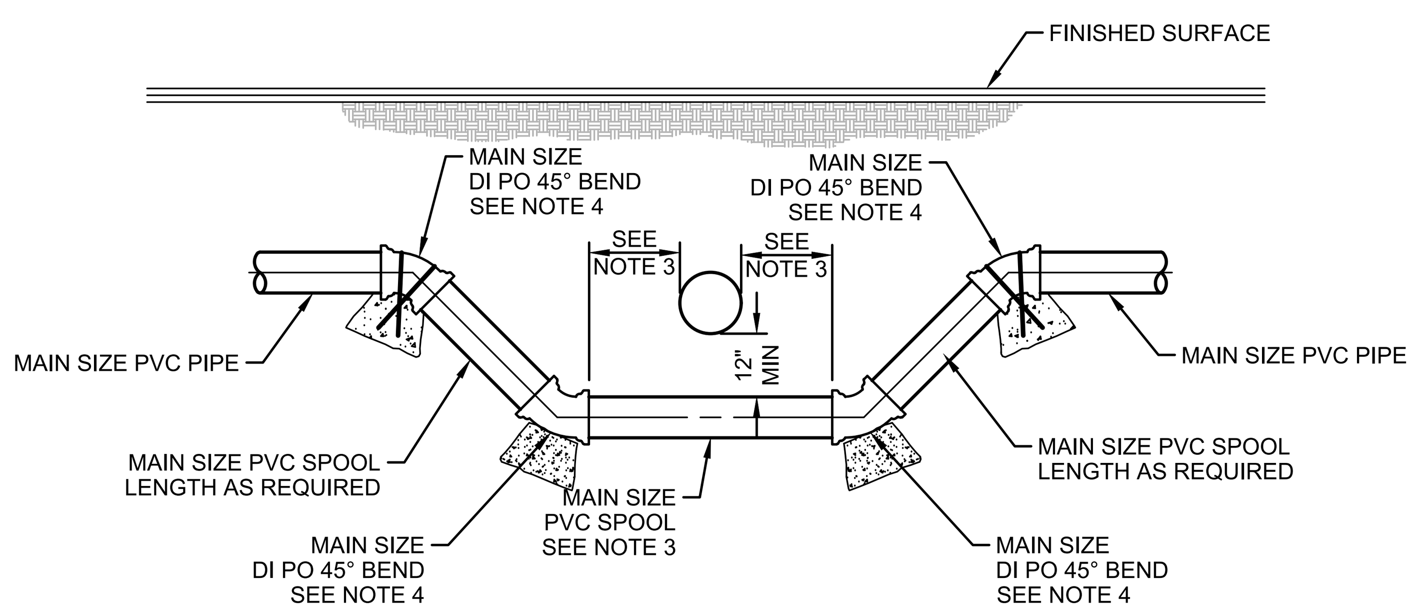

TYPICAL 45° VERTICAL OFFSET 4/—
NOT TO SCALE

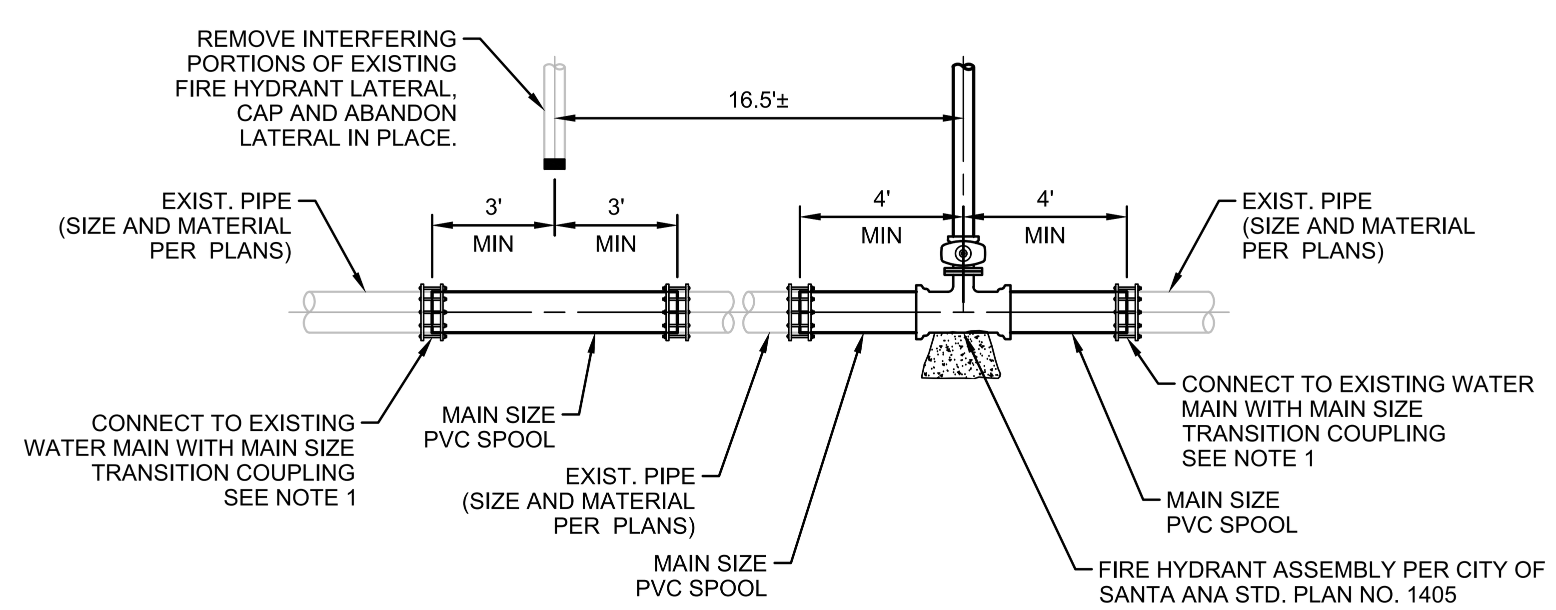

FIRE HYDRANT RELOCATION 5/—
NOT TO SCALE

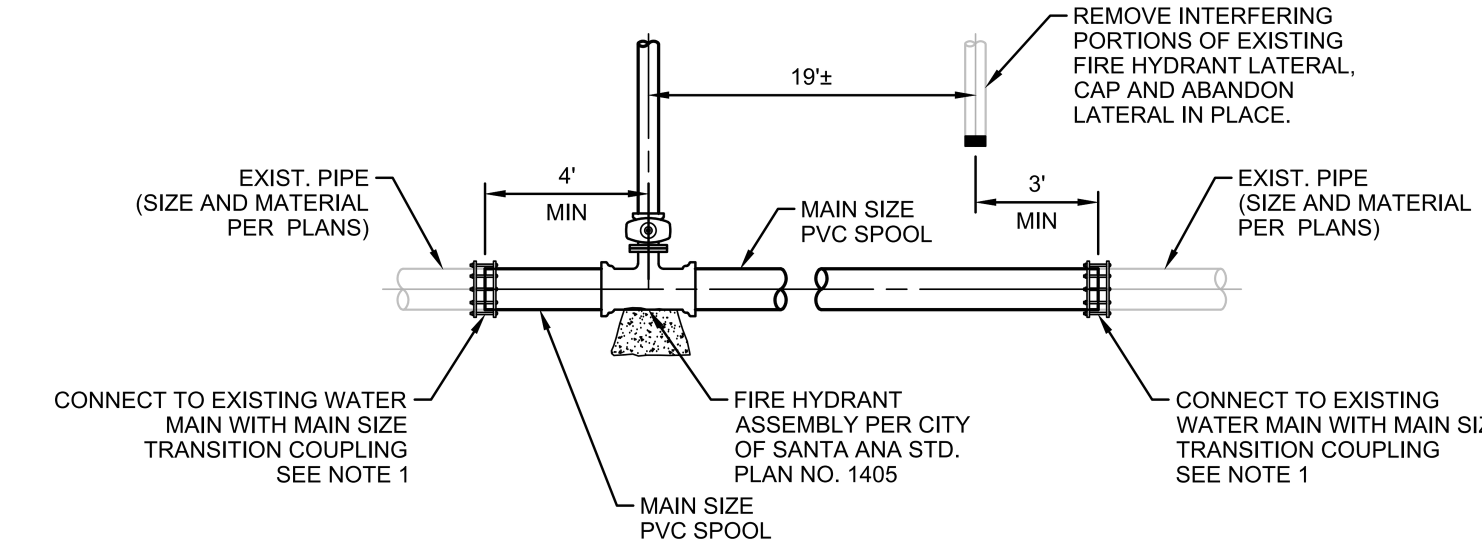

FIRE HYDRANT RELOCATION 6/—
NOT TO SCALE

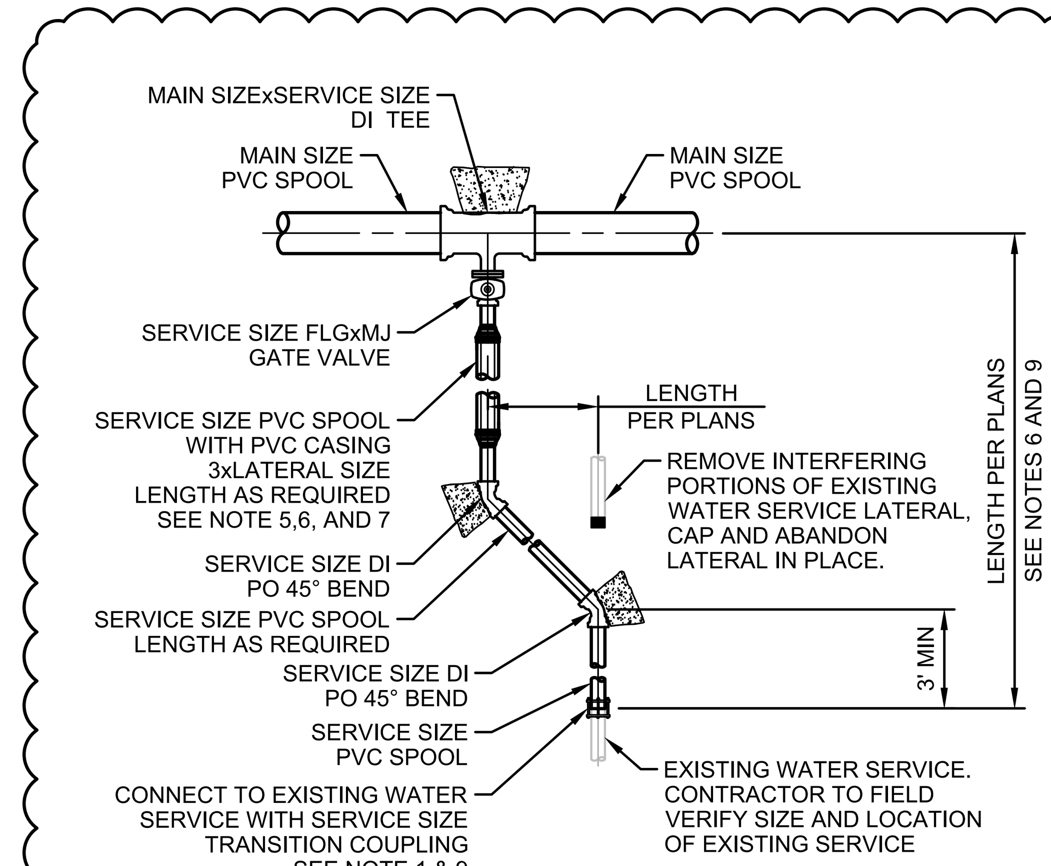

TYPICAL SERVICE RECONNECTION 7/—
NOT TO SCALE

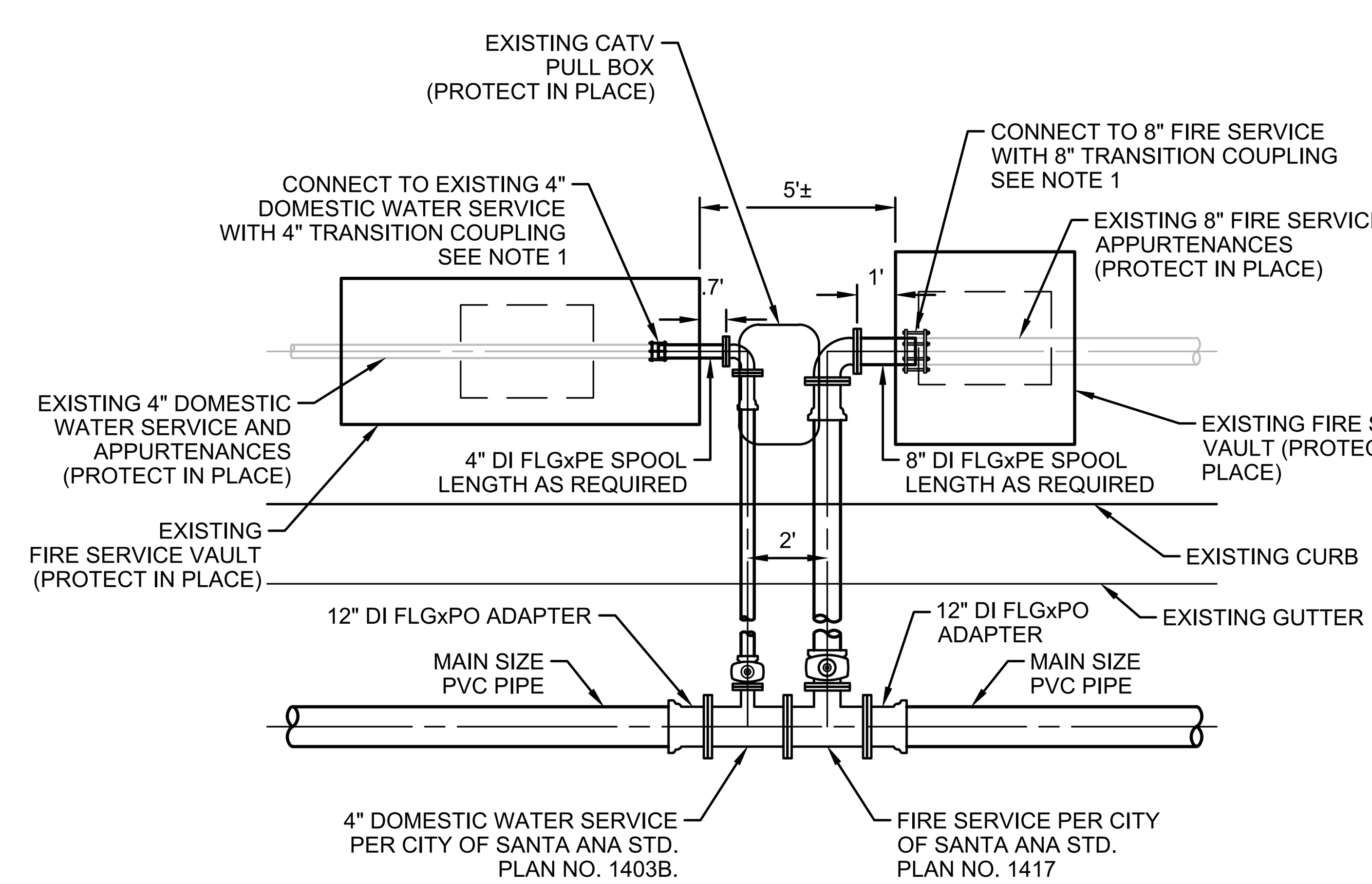

SERVICE CONNECTIONS 8/—
NOT TO SCALE

NOTES:

1. AN MJ DI SLEEVE SHALL BE USED WHEN EXISTING PIPE IS PVC OR DUCTILE IRON. IF EXISTING PIPE IS ACP, INSTALL LONG BODY FLEXIBLE TRANSITION COUPLING IN LIEU OF MJ SLEEVE.
2. CONTRACTOR TO POTHOLE EXISTING UTILITIES PRIOR TO WATER LINE RELOCATION. CONTRACTOR SHALL SET WATER LINE DEPTH TO MEET 4' MINIMUM DEPTH UNLESS OTHERWISE NOTED AND TO PROVIDE 1' MINIMUM VERTICAL CLEARANCE BETWEEN WATER LINE AND EXISTING UTILITIES.
3. CONTRACTOR SHALL PROVIDE 2' MINIMUM CLEARANCE BETWEEN EDGE OF CROSSING UTILITY AND THE PROPOSED VERTICAL BEND. CONTRACTOR SHALL INSTALL ONE FULL CONTINUOUS SECTION OF PVC PIPE CENTERED UNDER THE CROSSING WHEN CROSSING SANITARY SEWERS OR STORM DRAINS TO MEET DDW CRITERIA.
4. FITTINGS SHALL HAVE MEGALUG JOINT RESTRAINTS AT EACH END. NO UNRESTRAINED JOINTS BETWEEN FITTINGS.
5. WHERE THE PROPOSED WATER LINE CROSSES BOTH EAST AND WESTBOUND STREETCAR TRACKS, PVC CASING SHALL EXTEND UNDERNEATH BOTH TRACK SLABS. CASINGS SHALL EXTEND 5' MINIMUM BEYOND OUTERMOST EDGE OF EACH TRACK SLAB.
6. IN AREAS WHERE 5' MINIMUM IS NOT FEASIBLE, CONTRACTOR SHALL REDUCE CASING LENGTH PER INSPECTOR'S DIRECTION.
7. CONTRACTOR SHALL EXTEND STEEL CASING 10' PAST EXISTING STORM DRAIN OR SEWER CROSSING TO MEET DDW CRITERIA.
8. ALL HORIZONTAL BENDS SHALL BE PLACED WITH THRUST BLOCKS PER CITY OF SANTA ANA STD. PLAN 1412. ALL VERTICAL BENDS SHALL BE PLACED WITH VERTICAL BEND ANCHOR BLOCKS PER CITY OF SANTA ANA STD. PLAN 1420.
9. CONTRACTOR SHALL FIELD VERIFY THE SIZE AND LOCATION OF ALL SERVICES PRIOR TO REPLACEMENT/RECONNECTION. ADDITIONAL FITTINGS MAY BE REQUIRED FOR RECONNECTION.
10. WHEN CROSSING BELOW A UTILITY, CONTRACTOR SHALL PROVIDE 2' MINIMUM CLEARANCE BETWEEN EDGE OF THE CROSSING UTILITY AND THE PROPOSED VERTICAL BEND.

Underground Service Alert
of Southern California
811
CALL: **TOLL FREE 1-800-422-4133**
TWO WORKING DAYS BEFORE YOU DIG

NOTICE TO CONTRACTOR

PURSUANT TO ASSEMBLY BILL 3019 NO EXCAVATION PERMIT IS VALID UNLESS THE CONTRACTOR CONTACTS AND OBTAINS AN INQUIRY I.D. NUMBER FROM "UNDER-GROUND SERVICE ALERT" (1-800-422-4133) AT LEAST TWO WORKING DAYS PRIOR TO COMMENCING EXCAVATION.

M:\2HNT010400\Public_Works\Sheets_watr-Addendum\SHT-WN11-62481-R0B.dwg 02/27/18 8:53am

FILE NO.: SHT-WN11-62481-R0B.DWG

REVISIONS

NUMBER	DATE	INITIALS	DESCRIPTION	APPROVED	INSTALLED
A	12/2017		ISSUE FOR BID		
B	03/08/18	NAG	DETAIL REVISED		

REFERENCES

BENCHMARK NO.: 3B-98-85 (PT. 400) ELEV.: 140.19 (NAVD 88)

FOUND 3.75" OCS ALUMINUM BENCHMARK DISK STAMPED "3B-98-5", SET IN THE NORTHWESTERLY CORNER OF A 4 FT. BY 8 FT. CONCRETE CATCH BASIN. MONUMENT IS LOCATED IN THE SOUTHEASTERLY CORNER OF THE INTERSECTION OF FRUIT STREET AND THE ATCHINSON TOPEKA AND SANTA FE RAILROAD, 23 FT. EASTERLY OF THE CENTERLINE OF THE RAILWAY, 19.5 FT. SOUTHERLY OF THE CENTERLINE OF FRUIT STREET AND 14.3 FT. WEST OF A POWER POLE (#716815E"). ORANGE COUNTY SURVEYS, PUBLIC WORKS.

REGISTERED PROFESSIONAL ENGINEER NEHA A. GAJJAR No. C55574 Exp. 12-31-18 CIVIL STATE OF CALIFORNIA

HNTB
The HNTB Companies Infrastructure Solutions
200 E. Sandpointe Ave., Ste. 200
Santa Ana, CA 92707
Phone: 714-460-1600

PSOMAS
3 HUTTON CENTRE DRIVE, SUITE 200
SANTA ANA, CA 92707
(714) 751-7373 WWW.PSOMAS.COM

PREPARED UNDER THE SUPERVISION OF: NEHA GAJJAR | DATE
RCE NO.: 55574 | 12/2018
DESIGNED: MATTHEW VERA DRAWN: MATTHEW VERA CHECKED: NEHA GAJJAR | 10/2017

OCTA — SANTA ANA

WATER IMPROVEMENT PLANS
OC STREETCAR
MISCELLANEOUS DETAILS

WN11

ORANGE COUNTY TRANSPORTATION AUTHORITY

CITY OF SANTA ANA PROJECT NO. 17-6766-C: OC STREETCAR FROM HARBOR BLVD TO SARTC

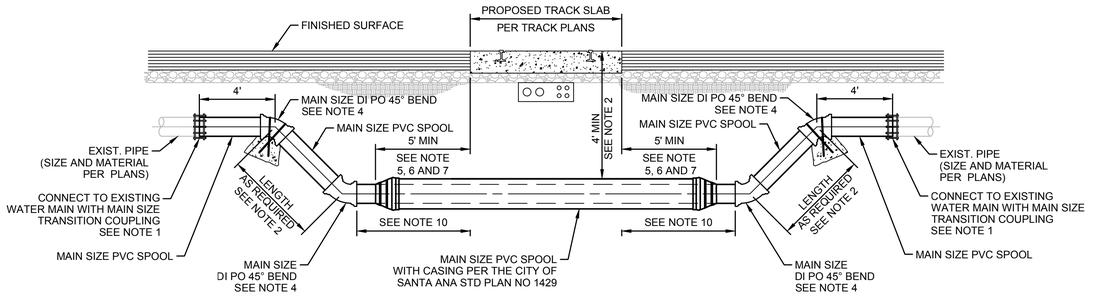

TYPICAL WATER MAIN VERTICAL RELOCATION 2

NOT TO SCALE

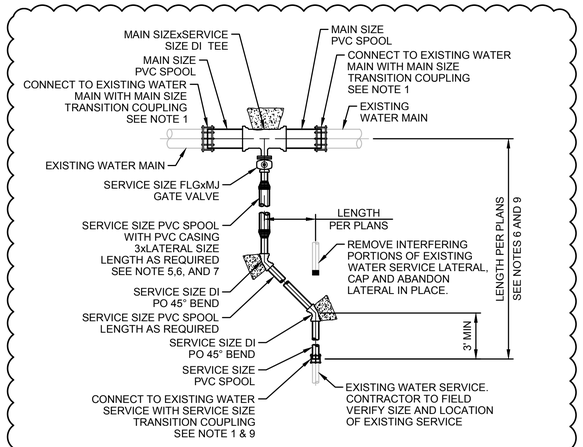

TYPICAL SERVICE RECONNECTION 8

NOT TO SCALE

NOTES:

1. AN MJ DI SLEEVE SHALL BE USED WHEN EXISTING PIPE IS PVC OR DUCTILE IRON. IF EXISTING PIPE IS ACP, INSTALL LONG BODY FLEXIBLE TRANSITION COUPLING IN LIEU OF MJ SLEEVE.
2. CONTRACTOR TO POTHOLE EXISTING UTILITIES PRIOR TO WATER LINE RELOCATION. CONTRACTOR SHALL SET WATER LINE DEPTH TO MEET 4' MINIMUM DEPTH UNLESS OTHERWISE NOTED AND TO PROVIDE 1' MINIMUM VERTICAL CLEARANCE BETWEEN WATER LINE AND EXISTING UTILITIES.
3. CONTRACTOR SHALL PROVIDE 2' MINIMUM CLEARANCE BETWEEN EDGE OF CROSSING UTILITY AND THE PROPOSED VERTICAL BEND. CONTRACTOR SHALL INSTALL ONE FULL CONTINUOUS SECTION OF PVC PIPE CENTERED UNDER THE CROSSING WHEN CROSSING SANITARY SEWERS OR STORM DRAINS TO MEET DDW CRITERIA.
4. FITTINGS SHALL HAVE MEGALUG JOINT RESTRAINTS AT EACH END. NO UNRESTRAINED JOINTS BETWEEN FITTINGS.
5. WHERE THE PROPOSED WATER LINE CROSSES BOTH EAST AND WESTBOUND STREETCAR TRACKS, PVC CASING SHALL EXTEND UNDERNEATH BOTH TRACK SLABS. CASINGS SHALL EXTEND 5' MINIMUM BEYOND OUTERMOST EDGE OF EACH TRACK SLAB.
6. IN AREAS WHERE 5' MINIMUM IS NOT FEASIBLE, CONTRACTOR SHALL REDUCE CASING LENGTH PER INSPECTOR'S DIRECTION.
7. CONTRACTOR SHALL EXTEND STEEL CASING 10' PAST EXISTING STORM DRAIN OR SEWER CROSSING TO MEET DDW CRITERIA.
8. ALL HORIZONTAL BENDS SHALL BE PLACED WITH THRUST BLOCKS PER CITY OF SANTA ANA STD. PLAN 1412. ALL VERTICAL BENDS SHALL BE PLACED WITH VERTICAL BEND ANCHOR BLOCKS PER CITY OF SANTA ANA STD. PLAN 1420.
9. CONTRACTOR SHALL FIELD VERIFY THE SIZE AND LOCATION OF ALL SERVICES PRIOR TO REPLACEMENT/RECONNECTION. ADDITIONAL FITTINGS MAY BE REQUIRED FOR RECONNECTION.
10. WHEN CROSSING BELOW A UTILITY, CONTRACTOR SHALL PROVIDE 2' MINIMUM CLEARANCE BETWEEN EDGE OF THE CROSSING UTILITY AND THE PROPOSED VERTICAL BEND.

Underground Service Alert
of Southern California
CALL: **TOLL FREE 1-800-422-4133**
TWO WORKING DAYS
BEFORE YOU DIG

NOTICE TO CONTRACTOR

PURSUANT TO ASSEMBLY BILL 3019 NO EXCAVATION PERMIT IS VALID UNLESS THE CONTRACTOR CONTACTS AND OBTAINS AN INQUIRY I.D. NUMBER FROM "UNDERGROUND SERVICE ALERT" (1-800-422-4133) AT LEAST TWO WORKING DAYS PRIOR TO COMMENCING EXCAVATION.

CITY OF SANTA ANA PROJECT NO. 17-6766-C; OC STREETCAR FROM HARBOR BLVD TO SARTC

M:\2HNTG\10400\Public_Works\Sheets_wotr-Addendum\SHT-WN12-62481-R08.dwg 02/27/18 8:53am

SHT-WN12-62481-R08.DWG

FILE NO.:

REVISIONS

NUMBER	DATE	INITIALS	DESCRIPTION	APPROVED	INSTALLED
A	12/2017		ISSUE FOR BID		
8	03/08/18	NAG	DETAIL REVISED		

REFERENCES

BENCHMARK NO.: 3B-98-85 (PT. 400) ELEV.: 140.19 (NAVD 88)

FOUND 3.75" OCS ALUMINUM BENCHMARK DISK STAMPED "3B-98-5", SET IN THE NORTHWESTERLY CORNER OF A 4 FT. BY 8 FT. CONCRETE CATCH BASIN. MONUMENT IS LOCATED IN THE SOUTHEASTERLY CORNER OF THE INTERSECTION OF FRUIT STREET AND THE ATCHINSON TOPEKA AND SANTA FE RAILROAD, 23 FT. EASTERLY OF THE CENTERLINE OF THE RAILWAY, 19.5 FT. SOUTHERLY OF THE CENTERLINE OF FRUIT STREET AND 14.3 FT. WEST OF A POWER POLE (#716815E"). ORANGE COUNTY SURVEYS, PUBLIC WORKS.

REGISTERED PROFESSIONAL ENGINEER — NEHA A. GAJJAR — No. 55574 — Exp. 12-31-18 — CIVIL — STATE OF CALIFORNIA

HNTB
The HNTB Companies
Infrastructure Solutions
200 E. Sandpointe Ave., Ste. 200
Santa Ana, CA 92707
Phone: 714-460-1600

PSOMAS
3 HUTTON CENTRE DRIVE, SUITE 200
SANTA ANA, CA 92707
(714) 751-7373 WWW.PSOMAS.COM

PREPARED UNDER THE SUPERVISION OF: NEHA GAJJAR — DATE

RCE NO.: 55574 — 12/2018

DESIGNED: MATTHEW VERA DRAWN: MATTHEW VERA CHECKED: NEHA GAJJAR — 10/2017

WATER IMPROVEMENT PLANS

OC STREETCAR

MISCELLANEOUS DETAILS

WN12

ORANGE COUNTY TRANSPORTATION AUTHORITY

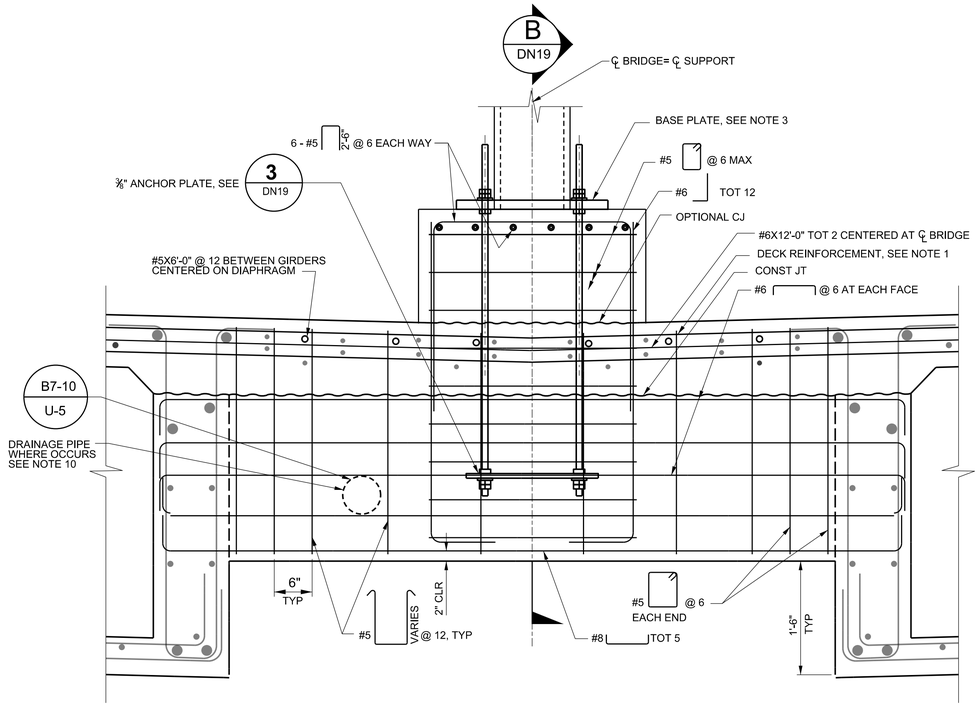

SECTION A
1" = 1'-0" — A DN19

DOWN GUY SIMILAR

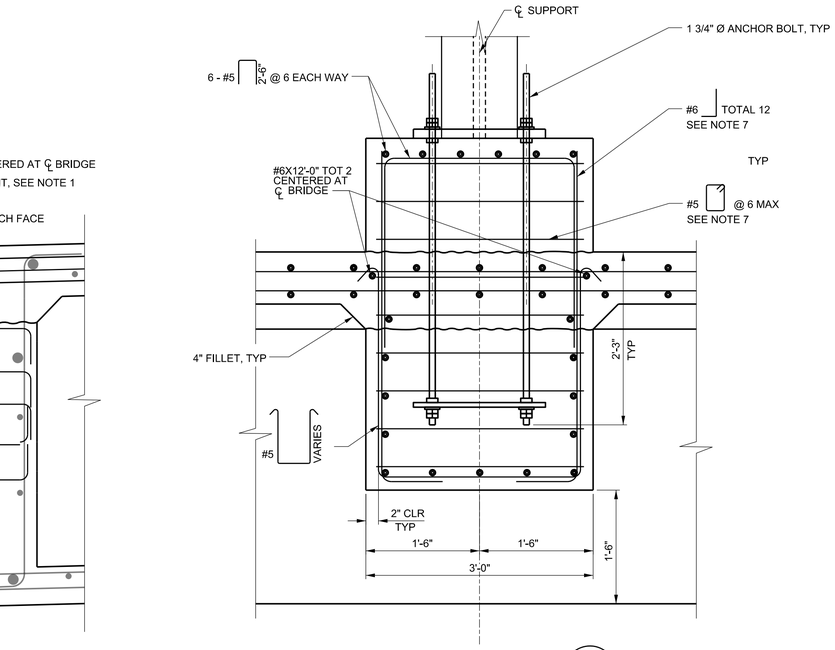

SECTION B
1" = 1'-0" — B DN19

DOWN GUY SIMILAR

NOTES:

1. NOT ALL TYPICAL DECK REINFORCEMENT SHOWN BUT SHALL NOT BE DAMAGED. DRILL AND BOND EPOXY COATED #5 HOOK BARS SHALL BE LOCATED TO AVOID ALL DECK REINF BEFORE DRILLING.
2. REBARS EXTENDING FROM PLINTHS SHALL BE INSTALLED WITH SUFFICIENT CLEARANCE BETWEEN ANY ADJACENT REBARS TO PREVENT CREATING A CURRENT PATH THAT CAN POTENTIALLY IMPACT TRAIN CONTROL FUNCTIONALITY.
3. FOR OCS POLE FOUNDATION BASE PLATE, ANCHOR BOLT LAYOUT AND SIZE, SEE OCS PLANS.
4. FOR DOWN GUY ANCHOR ROD LAYOUT AND SIZE, SEE OCS PLANS.
5. PROTECT THREADS DURING AND AFTER INSTALLATION WITH PLASTIC TUBE AND CAP.
6. TACK WELD NUT TO THE ANCHOR BOLT AND TO THE BASE PLATE (ONE REQUIRED PER POLE).
7. ADJUST REINFORCING BARS TO CLEAR OCS POLE ANCHOR BOLTS WITH ENGINEER'S APPROVAL.
8. CONSTRUCT OCS SUPPORT DIAPHRAGM PERPENDICULAR TO GIRDERS. ANCHOR BOLTS SHALL BE PLACED VERTICALLY.
9. ANCHOR BOLTS FOR FOUNDATIONS SHALL CONFORM TO ASTM F1554, GRADE 55. ANCHOR BOLT NUTS SHALL CONFORM TO ASTM `A563, GRADE A HEAVY HEX. WASHER SHALL BE HARDENED STEEL, CONFORMING TO ASTM F436.
10. DRAINAGE PIPE TO CLEAR OCS PEDESTAL ANCHORAGE.

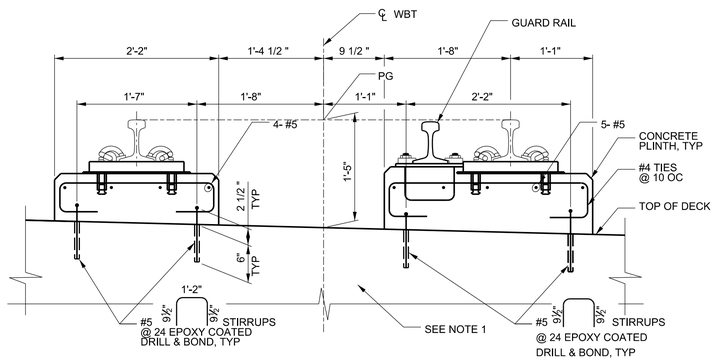

DETAIL 1
1" = 1'-0" — DN12

(SCALE : 1" = 1')

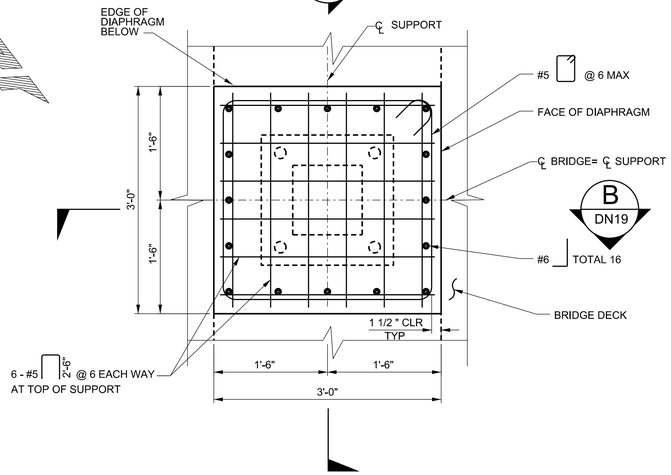

OCS ANCHORAGE DETAIL
1"=1'-0"

NOTE:
DIAPHRAGM REINFORCEMENT NOT SHOWN FOR CLARITY

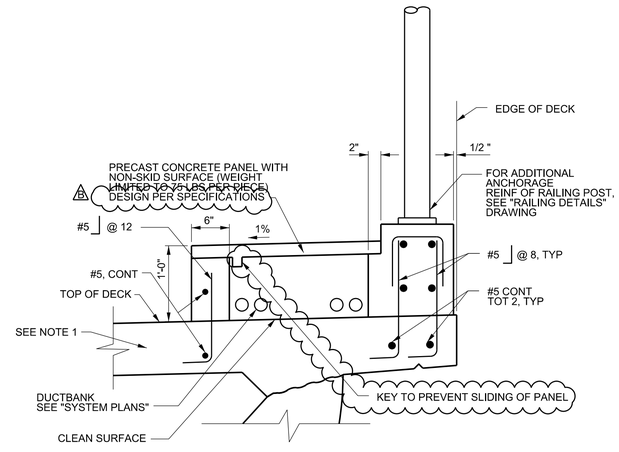

DETAIL 2
1" = 1'-0" — DN12

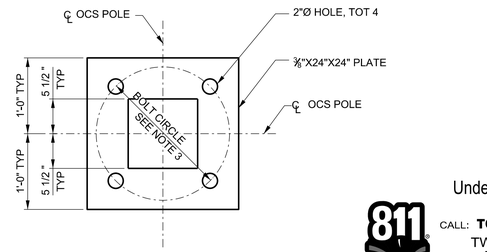

ANCHOR PLATE DETAIL 3
1" = 1'-0" — DN19

Underground Service Alert of Southern California
811
CALL: **TOLL FREE 1-800-422-4133**
TWO WORKING DAYS BEFORE YOU DIG

NOTICE TO CONTRACTOR

PURSUANT TO ASSEMBLY BILL 3019 NO EXCAVATION PERMIT IS VALID UNLESS THE CONTRACTOR CONTACTS AND OBTAINS AN INQUIRY I.D. NUMBER FROM "UNDERGROUND SERVICE ALERT" (1-800-422-4133) AT LEAST TWO WORKING DAYS PRIOR TO COMMENCING EXCAVATION.

CITY OF SANTA ANA PROJECT NO. 17-6766-C; OC STREETCAR FROM HARBOR BLVD TO SARTC

FILE NO.:

REVISIONS

NUMBER	DATE	INITIALS	DESCRIPTION	APPROVED	INSTALLED
A	12/2017		ISSUE FOR BID		
1	03/08/18	PWP	PRECAST CONCRETE PANEL UPDATES		

REFERENCES

BENCHMARK NO.: 3B-98-85 (PT. 400) ELEV.: 140.19 (NAVD 88)

FOUND 3.75" OCS ALUMINUM BENCHMARK DISK STAMPED "3B-98-5", SET IN THE NORTHWESTERLY CORNER OF A 4 FT. BY 8 FT. CONCRETE CATCH BASIN. MONUMENT IS LOCATED IN THE SOUTHEASTERLY CORNER OF THE INTERSECTION OF FRUIT STREET AND THE ATCHINSON TOPEKA AND SANTA FE RAILROAD, 23 FT. EASTERLY OF THE CENTERLINE OF THE RAILWAY, 19.5 FT. SOUTHERLY OF THE CENTERLINE OF FRUIT STREET AND 14.3 FT. WEST OF A POWER POLE (#716815E"). ORANGE COUNTY SURVEYS, PUBLIC WORKS.

REGISTERED PROFESSIONAL ENGINEER — PATRICK W. PENCE — RCE NO. C52680 — Exp. 12/31/2018 — CIVIL — STATE OF CALIFORNIA

HNTB
The HNTB Companies
Infrastructure Solutions
200 E. Sandpointe Ave., Ste. 200
Santa Ana, CA 92707
Phone: 714-460-1600

PREPARED UNDER THE SUPERVISION OF:	P. PENCE		DATE
		RCE NO.: 52680	12/31/2018
DESIGNED: P. PENCE	DRAWN: L. ZHANG	CHECKED: J. WANG	10/2017

WESTMINSTER AVENUE BRIDGE

OC STREETCAR

MISCELLANEOUS DETAILS

ORANGE COUNTY TRANSPORTATION AUTHORITY

DN19

SHT-DN19-62481-R08.dgn 2/19/2018 9:03:00 AM SHT-DN19-62481-R08.dgn

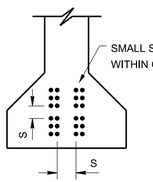

CLEARANCES FOR PRETENSIONED STRANDS

1. STRANDS MAY BE BUNDLED IN GROUPS CONSISTING OF 3 VERTICALLY, 2 HORIZONTALLY AND SEPARATED AT THE ENDS.
2. THE MIN DISTANCE "S" BETWEEN GROUPS OR INDIVIDUAL STRANDS IS 1½" FOR ⅜" Ø STRANDS, 1¾" FOR ½" Ø STRANDS, 2" FOR 0.6" Ø STRANDS.
3. "S" IS MEASURED BETWEEN CENTERS OF ADJACENT STRANDS.
4. APPROVAL BY THE ENGINEER IS REQUIRED FOR DEVIATION.

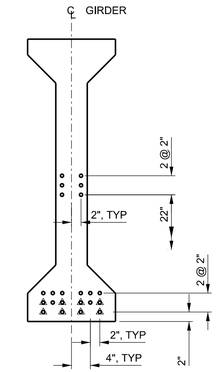

STRAND TEMPLATE

LEGEND

- ○ DENOTES CONTINUOUSLY BONDED STRAND TERMINATED AT END GIRDER
- ◬ DENOTES CONTINUOUSLY BONDED STRAND EXTENDED INTO CIP PIER CAP

NOTES:

1. THE SPACING OF DOWELS AND THE BARS TO BE ADJUSTED AS REQUIRED BY TENDON ALIGNMENT. FINAL LAYOUT AND SPACING OF THE DOWELS SHALL BE SUBMITTED TO ENGINEER FOR APPROVAL. REFER TO "PIER 2 DETAILS NO. 2" AND "ABUTMENT DIAPHRAGM DETAILS NO. 1" DRAWINGS FOR END DIAPHRAGM DOWEL LOCATIONS, HEIGHT VARIES.
2. END OF GIRDERS SHALL BE CAST PARALLEL TO ADJACENT ℄ BRG ABUTMENT OR ℄ BENT.
3. FOR EXTENTS OF #8 AND #9 BARS, SEE "PIER 2 DETAILS NO. 2" DRAWING.
4. #9 BARS IN BOTTOM FLANGE MADE CONTINUOUS USING COUPLERS. MECHANICAL COUPLER SHALL BE ULTIMATE BUTT SPLICE.

PRESTRESSING NOTES:

JACKING FORCE (P): THE JACKING FORCE REQUIRED AT THE POINT OF CONTROL ALONG THE SPAN. THE JACKING FORCE DOES NOT INCLUDE ANY FABRICATION SPECIFIC LOSSES.

THE MAXIMUM TENSILE STRESS IN THE PRESTRESSING STEEL UPON RELEASE SHALL NOT EXCEED 75% OF THE SPECIFIED MINIMUM ULTIMATE TENSILE STRENGTH OF THE PRESTRESSING STEEL.

THE MAXIMUM TEMPORARY TENSILE STRESS (JACKING STRESS) IN THE PRESTRESSING STEEL SHALL NOT EXCEED 80% OF THE SPECIFIED MINIMUM ULTIMATE TENSILE STRENGTH OF THE PRESTRESSING STEEL.

CONCRETE STRENGTH: f'_{ci} IS AT TIME OF INITIAL STRESSING; f'_c IS AT 28 DAYS

DEFLECTION COMPONENTS: INFORMATIONAL - TO BE USED IN SETTING SCREED LINE ELEVATIONS

SCREED LINE ELEVATIONS FOR DECK CONCRETE WILL BE DETERMINED BY THE ENGINEER.

CONTRACTOR MAY INTERPOLATE "P" AND "X" VALUES BETWEEN LIMITS SHOWN, AS APPROVED BY THE ENGINEER.

USE EPOXY COATED REINFORCEMENT IN ENVIRONMENTAL AREA III

GIRDER LOCATION OR DESIGNATION AND LENGTH "L"	JACKING FORCE (P) (KIPS) "X"		"Y" (INCHES)	CONCRETE STRENGTH (KSI)		MIDSPAN DEAD LOAD DEFLECTION (INCHES)	
				f'_{ci}	f'_c	DECK	RAIL
A - 79'-7"	4"	820.00	20.00	6.0	9.0	1.8	0.279
B - 79'-7"	4"	820.00	20.00	6.0	9.0	2.34	0.252
C - 79'-7"	4"	820.00	20.00	6.0	9.0	2.34	0.252
D - 79'-7"	4"	820.00	20.00	6.0	9.0	2.34	0.252
E - 79'-7"	4"	820.00	20.00	6.0	9.0	1.8	0.279

◬B

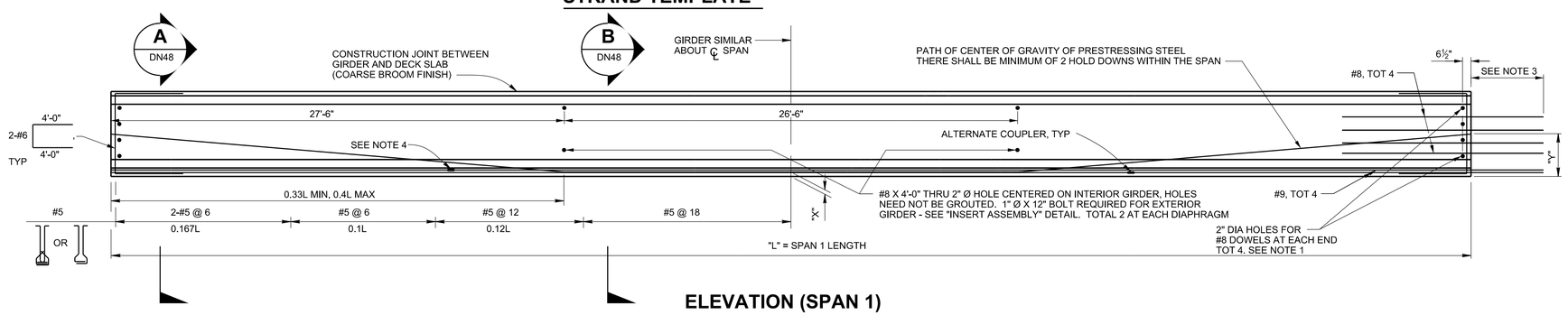

ELEVATION (SPAN 1)

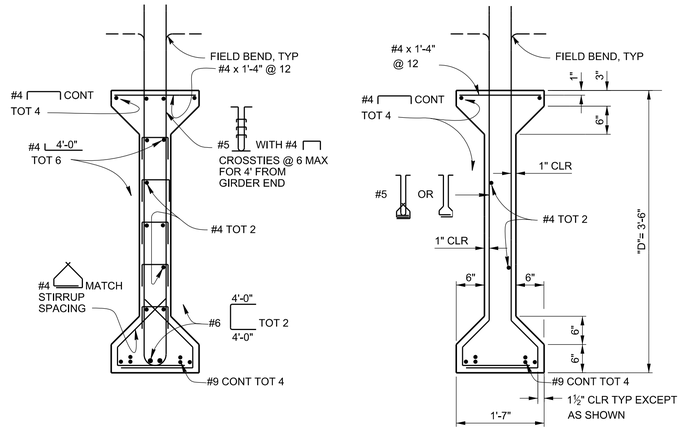

SECTION A (DN48)

SECTION B (DN48)

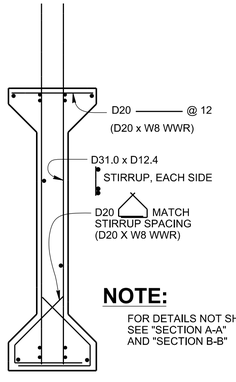

NOTE: FOR DETAILS NOT SHOWN, SEE "SECTION A-A" AND "SECTION B-B"

OPTIONAL WELDED WIRE REINFORCEMENT (WWR) DETAIL

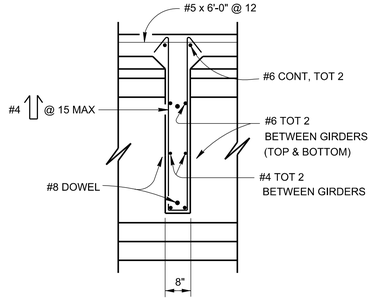

SECTION E (DN48)

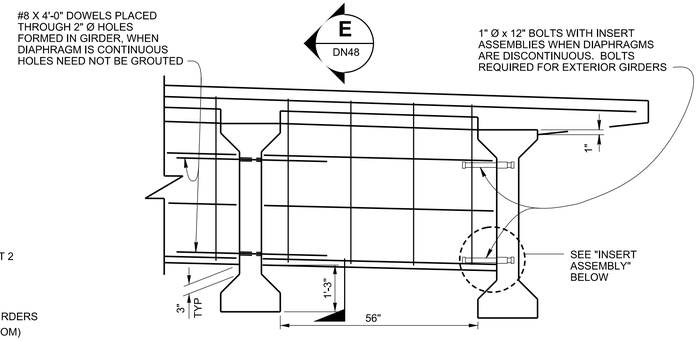

INTERMEDIATE DIAPHRAGM

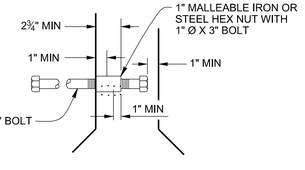

INSERT ASSEMBLY

NO SCALE

Underground Service Alert of Southern California
811 CALL: **TOLL FREE 1-800-422-4133**
TWO WORKING DAYS BEFORE YOU DIG

NOTICE TO CONTRACTOR

PURSUANT TO ASSEMBLY BILL 3019 NO EXCAVATION PERMIT IS VALID UNLESS THE CONTRACTOR CONTACTS AND OBTAINS AN INQUIRY I.D. NUMBER FROM "UNDERGROUND SERVICE ALERT" (1-800-422-4133) AT LEAST TWO WORKING DAYS PRIOR TO COMMENCING EXCAVATION.

FILE NO.:

REVISIONS

NUMBER	DATE	INITIALS	DESCRIPTION	APPROVED	INSTALLED
A	12/2017		ISSUE FOR BID		
◬B	03/08/18	MVD	GIRDER DETAIL UPDATES		

REFERENCES

BENCHMARK NO.: 3B-98-85 (PT. 400) ELEV.: 140.19 (NAVD 88)

FOUND 3.75" OCS ALUMINUM BENCHMARK DISK STAMPED "3B-98-5", SET IN THE NORTHWESTERLY CORNER OF A 4 FT. BY 8 FT. CONCRETE CATCH BASIN. MONUMENT IS LOCATED IN THE SOUTHEASTERLY CORNER OF THE INTERSECTION OF FRUIT STREET AND THE ATCHINSON TOPEKA AND SANTA FE RAILROAD, 23 FT. EASTERLY OF THE CENTERLINE OF THE RAILWAY, 19.5 FT. SOUTHERLY OF THE CENTERLINE OF FRUIT STREET AND 14.3 FT. WEST OF A POWER POLE (#716815E"). ORANGE COUNTY SURVEYS, PUBLIC WORKS.

REGISTERED PROFESSIONAL ENGINEER — MICHAEL VAN DUYN — RCE NO. 55950 — Exp. 12/31/2018 — STRUCTURAL — STATE OF CALIFORNIA

HNTB
The HNTB Companies Infrastructure Solutions
200 E. Sandpointe Ave., Ste. 200
Santa Ana, CA 92707
Phone: 714-460-1600

PREPARED UNDER THE SUPERVISION OF:	MICHAEL VAN DUYN	DATE
	RCE NO.: 5950	12/31/2018
DESIGNED: P. PENCE	DRAWN: L. ZHANG	CHECKED: J. WANG — 10/2017

SANTA ANA RIVER BRIDGE

OC STREETCAR

GIRDER DETAILS NO. 1

ORANGE COUNTY TRANSPORTATION AUTHORITY

DN48

SHT-DN48-92481-R0B.dgn 2/19/2018 9:04:42 AM

CITY OF SANTA ANA PROJECT NO. 17-6766-C: OC STREETCAR FROM HARBOR BLVD TO SARTC

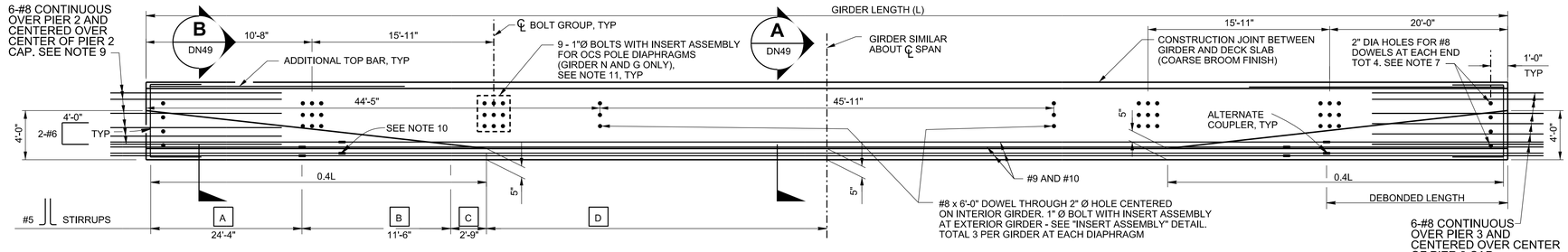

ELEVATION (SPAN 2)

LOCATION	A	B	C	D
GIRDER E	2- #5 @ 6"	#5 @ 6"	#5 @ 12"	#5 @ 12"
GIRDER F	2- #5 @ 6"	#5 @ 6"	#5 @ 12"	#5 @ 12"
GIRDER G	2- #5 @ 6"	#5 @ 6"	#5 @ 12"	#5 @ 12"
GIRDER H	2- #5 @ 6"	#5 @ 6"	#5 @ 12"	#5 @ 12"

NOTE:

GIRDER ENDS TO BE CAST SUCH THAT A LEVEL SURFACE IS PROVIDED AT BEARING PADS

LOCATION	GIRDER LENGTH (L)	GIRDER DEPTH (D)	NUMBER OF 0.6" Ø STRANDS	JACKING FORCE (P)	CONCRETE STRENGTH (ksi)		MIDSPAN DEAD LOAD DEFLECTION (In)		ADDITIONAL TOP BAR (EACH END)
					f'ci	f'c	DECK	RAIL	
GIRDER E	134'-8"	6'-0"	38	1800.0	6.0	9.0	2.9	0.102	#7 x 20'-0", TOT 4
GIRDER F	134'-8"	6'-0"	38	1800.0	6.0	9.0	2.9	0.102	#7 x 20'-0", TOT 4
GIRDER G	134'-8"	6'-0"	38	1800.0	6.0	9.0	2.9	0.102	#7 x 20'-0", TOT 4
GIRDER H	134'-8"	6'-0"	38	1800.0	6.0	9.0	2.9	0.102	#7 x 20'-0", TOT 4

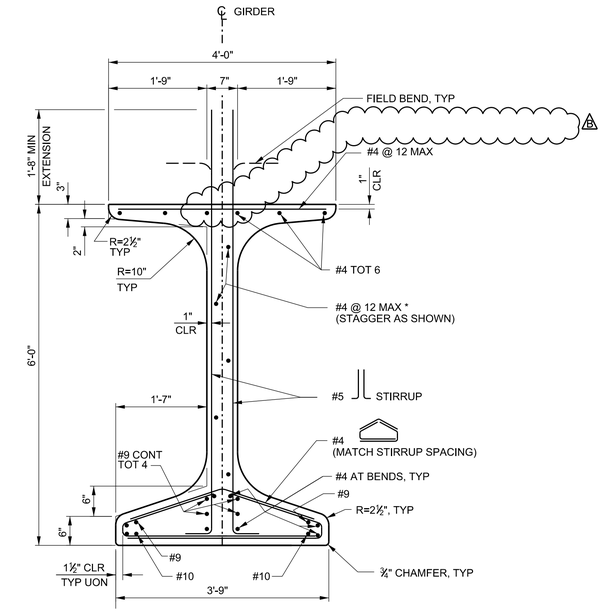

SECTION A DN49

* - EXTEND BARS 2'-0" INTO END DIAPHRAGM, END AS REQUIRED.

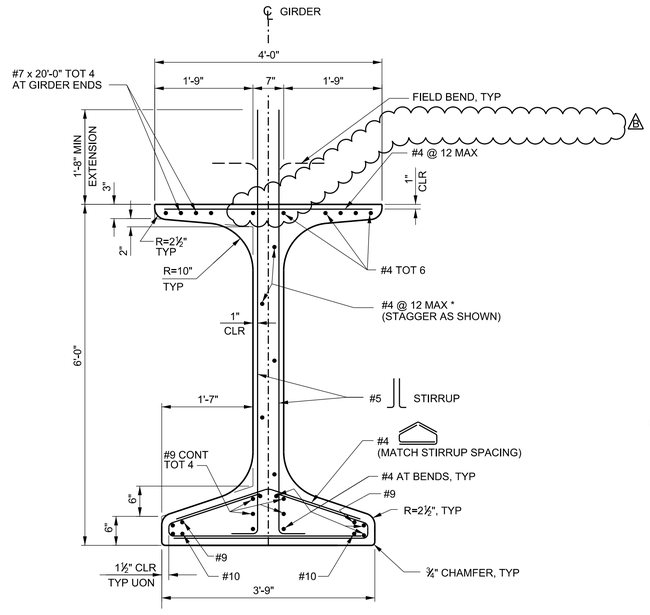

SECTION B DN49

* - EXTEND BARS 2'-0" INTO END DIAPHRAGM, END AS REQUIRED.

PRESTRESSING NOTES:

1. THE JACKING FORCE (P) IS THE JACKING FORCE REQUIRED AT THE POINT OF CONTROL ALONG THE SPAN. THE JACKING FORCE DOES NOT INCLUDE ANY FABRICATION SPECIFIC LOSSES
2. THE MAXIMUM TEMPORARY TENSILE STRESS (JACKING STRESS) IN THE PRESTRESSING STEEL SHALL NOT EXCEED 80% OF THE SPECIFIED MINIMUM ULTIMATE TENSILE STRENGTH OF THE PRESTRESSING STEEL
3. CONCRETE STRENGTH:
   f'ci IS AT TIME OF INITIAL STRESSING
   f'c IS AT 28 DAYS
4. DEFLECTION COMPONENTS ARE INFORMATIONAL AND WILL BE USED TO SET SCREED LINE ELEVATIONS
5. SCREED LINE ELEVATIONS FOR DECK CONCRETE WILL BE DETERMINED BY THE ENGINEER
6. PRESTRESSING STRAND SHALL BE 270 KSI LOW RELAXATION
7. THE SPACING OF DOWELS AND THE BARS TO BE ADJUSTED AS REQUIRED BY TENDON ALIGNMENT. FINAL LAYOUT AND SPACING OF THE DOWELS SHALL BE SUBMITTED TO ENGINEER FOR APPROVAL. REFER TO "PIER 2 DETAILS NO. 2" AND "ABUTMENT DIAPHRAGM DETAILS NO. 1" DRAWINGS FOR END DIAPHRAGM DOWEL LOCATIONS, HEIGHT VARIES.
8. END OF GIRDERS SHALL BE CAST PARALLEL TO ADJACENT ℄ BRG ABUTMENT OR ℄ BENT.
9. FOR EXTENTS OF #8, #9 AND #10 BARS, SEE "PIER 2 DETAILS NO. 2" AND "PIER 3 DETAILS NO. 2" DRAWINGS.
10. #9 AND #10 BARS IN BOTTOM FLANGE MADE CONTINUOUS USING COUPLERS. MECHANICAL COUPLER SHALL BE ULTIMATE BUTT SPLICE.
11. FOR EXACT LOCATION AND LAYOUT OF OCS POLE DIAPHRAGM BOLT WITH INSERT ASSEMBLY, SEE "GIRDER LAYOUT" AND "GIRDER DETAILS NO. 4" DRAWINGS.
12. FOR INTERMEDIATE DIAPHRAGM DETAIL OF SPAN 2 AND 3, SEE "INTERMEDIATE DIAPHRAGM" DETAIL ON DRAWING "DN-51".

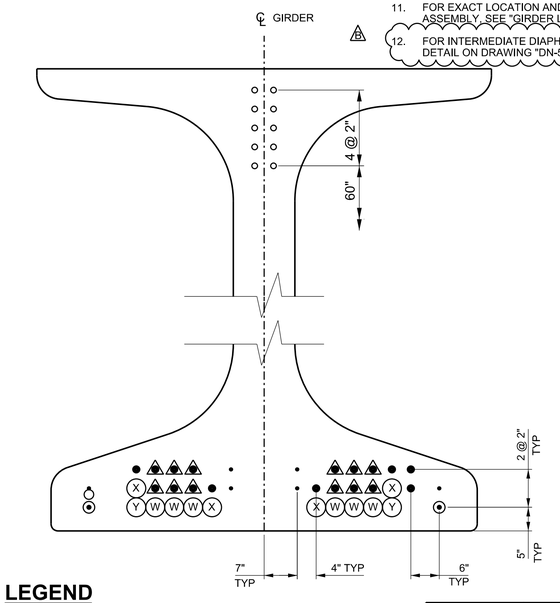

LEGEND

- ● - DENOTES CONTINUOUSLY BONDED STRAND TERMINATED AT END OF GIRDER
- ▲ - DENOTES CONTINUOUSLY BONDED STRAND EXTENDED INTO CIP PIER CAP
- (X)(Y)(W) - DENOTES DEBONDED STRAND
- • - DENOTES CONTINUOUS ADDITIONAL REBARS (#9)
- ⊙ - DENOTES CONTINUOUS ADDITIONAL REBARS (#10)

STRAND LOCATION	DEBONDED LENGTH
(W)	2'-0"
(X)	2'-0"
(Y)	4'-0"

STRAND TEMPLATE & DEBONDING PATTERN

NOTES:

1. STRANDS SHALL BE PLACED AS LOW AS POSSIBLE IN THE STRAND TEMPLATE AND SYMMETRICAL ABOUT GIRDER
2. NO MORE THAN 33% OF THE TOTAL NUMBER OF STRANDS AND 50% OF THE STRANDS PER HORZIONTAL ROW MAY BE DEBONDED
3. STRAND LOCATIONS MAY BE ADJUSTED AS APPROVED BY THE ENGINEER

NO SCALE

Underground Service Alert of Southern California
811 CALL: **TOLL FREE 1-800-422-4133**
TWO WORKING DAYS BEFORE YOU DIG

NOTICE TO CONTRACTOR

PURSUANT TO ASSEMBLY BILL 3019 NO EXCAVATION PERMIT IS VALID UNLESS THE CONTRACTOR CONTACTS AND OBTAINS AN INQUIRY I.D. NUMBER FROM "UNDERGROUND SERVICE ALERT" (1-800-422-4133) AT LEAST TWO WORKING DAYS PRIOR TO COMMENCING EXCAVATION.

FILE NO.:

REVISIONS

NUMBER	DATE	INITIALS	DESCRIPTION	APPROVED	INSTALLED
A	12/2017		ISSUE FOR BID		
B	03/08/18	MVD	GIRDER DETAIL UPDATES		

REFERENCES

BENCHMARK NO.: 3B-98-85 (PT. 400) ELEV.: 140.19 (NAVD 88)

FOUND 3.75" OCS ALUMINUM BENCHMARK DISK STAMPED "3B-98-5", SET IN THE NORTHWESTERLY CORNER OF A 4 FT. BY 8 FT. CONCRETE CATCH BASIN. MONUMENT IS LOCATED IN THE SOUTHEASTERLY CORNER OF THE INTERSECTION OF FRUIT STREET AND THE ATCHINSON TOPEKA AND SANTA FE RAILROAD, 23 FT. EASTERLY OF THE CENTERLINE OF THE RAILWAY, 19.5 FT. SOUTHERLY OF THE CENTERLINE OF FRUIT STREET AND 14.3 FT. WEST OF A POWER POLE (#716815E"). ORANGE COUNTY SURVEYS, PUBLIC WORKS.

REGISTERED PROFESSIONAL ENGINEER — Michael Van Duyn — RCE NO. 5950 — Exp. 12/31/2018 — STRUCTURAL — STATE OF CALIFORNIA

HNTB
The HNTB Companies
Infrastructure Solutions
200 E. Sandpointe Ave., Ste. 200
Santa Ana, CA 92707
Phone: 714-460-1600

PREPARED UNDER THE SUPERVISION OF: MICHAEL VAN DUYN		DATE
	RCE NO.: 5950	12/31/2018
DESIGNED: P. PENCE DRAWN: L. ZHANG	CHECKED: J. WANG	10/2017

PUBLIC WORKS DEPARTMENT — Citizen Government — Irvine, California — Founded 1874 as a City

OCTA

DOWNTOWN ORANGE COUNTY — SANTA ANA

SANTA ANA RIVER BRIDGE
OC STREETCAR
GIRDER DETAILS NO. 2
ORANGE COUNTY TRANSPORTATION AUTHORITY

DN49

SHT-DN49-02481-R0B.dgn 9:06:36 AM 2/19/2018

CITY OF SANTA ANA PROJECT NO. 17-6766-C: OC STREETCAR FROM HARBOR BLVD TO SARTC

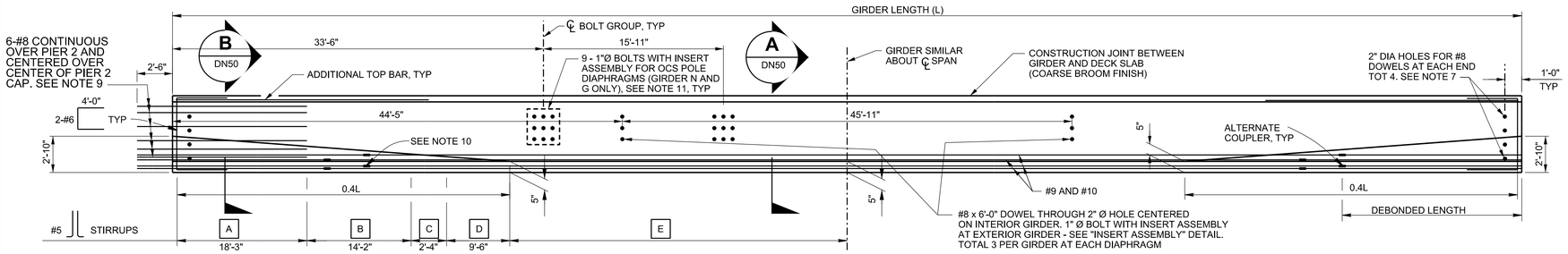

ELEVATION (SPAN 3)

LOCATION	A	B	C	D	E
GIRDER E	2- #5 @ 6"	#5 @ 6"	#5 @ 6"	#5 @ 12"	#5 @ 18"
GIRDER F	2- #5 @ 6"	#5 @ 6"	#5 @ 6"	#5 @ 12"	#5 @ 18"
GIRDER G	2- #5 @ 6"	#5 @ 6"	#5 @ 6"	#5 @ 12"	#5 @ 18"
GIRDER H	2- #5 @ 6"	#5 @ 6"	#5 @ 6"	#5 @ 12"	#5 @ 18"

NOTE:

GIRDER ENDS TO BE CAST SUCH THAT A LEVEL SURFACE IS PROVIDED AT BEARING PADS

LOCATION	GIRDER LENGTH (L)	GIRDER DEPTH (D)	NUMBER OF 0.6" Ø STRANDS	JACKING FORCE (P)	CONCRETE STRENGTH (ksi)		MIDSPAN DEAD LOAD DEFLECTION (In)		ADDITIONAL TOP BAR (EACH END)
					f'ci	f'c	DECK	RAIL	
GIRDER E	137'-11"	6'-0"	40	1950.0	6.0	9.0	3.086	0.21	#7 x 20'-0", TOT 4
GIRDER F	137'-11"	6'-0"	40	1950.0	6.0	9.0	3.086	0.21	#7 x 20'-0", TOT 4
GIRDER G	137'-11"	6'-0"	40	1950.0	6.0	9.0	3.086	0.21	#7 x 20'-0", TOT 4
GIRDER H	137'-11"	6'-0"	40	1950.0	6.0	9.0	3.086	0.21	#7 x 20'-0", TOT 4

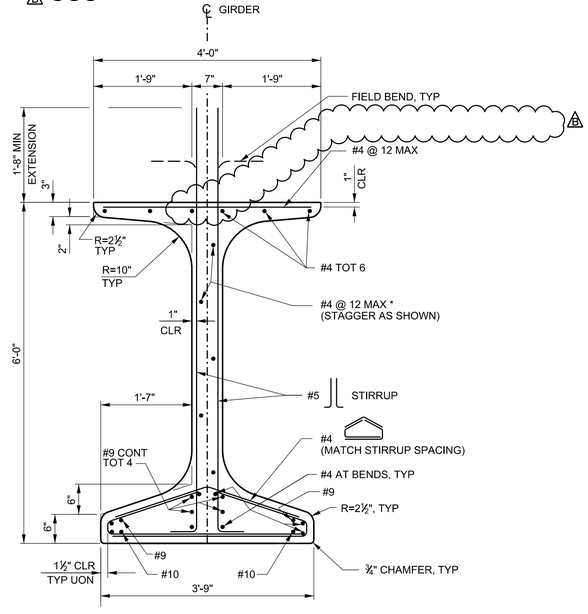

SECTION A (DN50)

* - EXTEND BARS 2'-0" INTO END DIAPHRAGM, END AS REQUIRED.

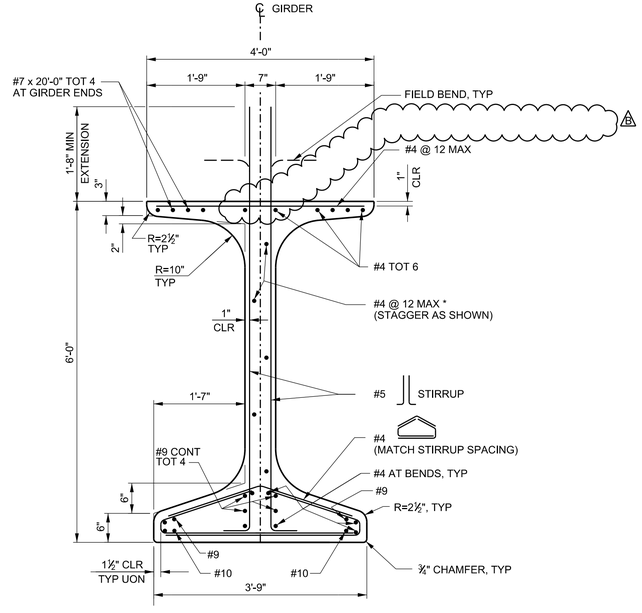

SECTION B (DN50)

* - EXTEND BARS 2'-0" INTO END DIAPHRAGM, END AS REQUIRED.

PRESTRESSING NOTES:

1. THE JACKING FORCE (P) IS THE JACKING FORCE REQUIRED AT THE POINT OF CONTROL ALONG THE SPAN. THE JACKING FORCE DOES NOT INCLUDE ANY FABRICATION SPECIFIC LOSSES
2. THE MAXIMUM TEMPORARY TENSILE STRESS (JACKING STRESS) IN THE PRESTRESSING STEEL SHALL NOT EXCEED 80% OF THE SPECIFIED MINIMUM ULTIMATE TENSILE STRENGTH OF THE PRESTRESSING STEEL
3. CONCRETE STRENGTH:
   f'ci IS AT TIME OF INITIAL STRESSING
   f'c IS AT 28 DAYS
4. DEFLECTION COMPONENTS ARE INFORMATIONAL AND WILL BE USED TO SET SCREED LINE ELEVATIONS
5. SCREED LINE ELEVATIONS FOR DECK CONCRETE WILL BE DETERMINED BY THE ENGINEER
6. PRESTRESSING STRAND SHALL BE 270 KSI LOW RELAXATION
7. THE SPACING OF DOWELS AND THE BARS TO BE ADJUSTED AS REQUIRED BY TENDON ALIGNMENT. FINAL LAYOUT AND SPACING OF THE DOWELS SHALL BE SUBMITTED TO ENGINEER FOR APPROVAL. REFER TO "PIER 2 DETAILS NO. 2" AND "ABUTMENT DIAPHRAGM DETAILS NO. 1" DRAWINGS FOR END DIAPHRAGM DOWEL LOCATIONS, HEIGHT VARIES.
8. END OF GIRDERS SHALL BE CAST PARALLEL TO ADJACENT ℄ BRG ABUTMENT OR ℄ BENT.
9. FOR EXTENTS OF #8, #9 AND #10 BARS, SEE "PIER 2 DETAILS NO. 2" AND "PIER 3 DETAILS NO. 2" DRAWINGS.
10. #9 AND #10 BARS IN BOTTOM FLANGE MADE CONTINUOUS USING COUPLERS. MECHANICAL COUPLER SHALL BE ULTIMATE BUTT SPLICE.
11. FOR EXACT LOCATION AND LAYOUT OF OCS POLE DIAPHRAGM BOLT WITH INSERT ASSEMBLY, SEE "GIRDER LAYOUT" AND "GIRDER DETAILS NO. 4" DRAWINGS.
12. FOR INTERMEDIATE DIAPHRAGM DETAIL OF SPAN 2 AND 3, SEE "INTERMEDIATE DIAPHRAGM" DETAIL ON DRAWING "DN-51".

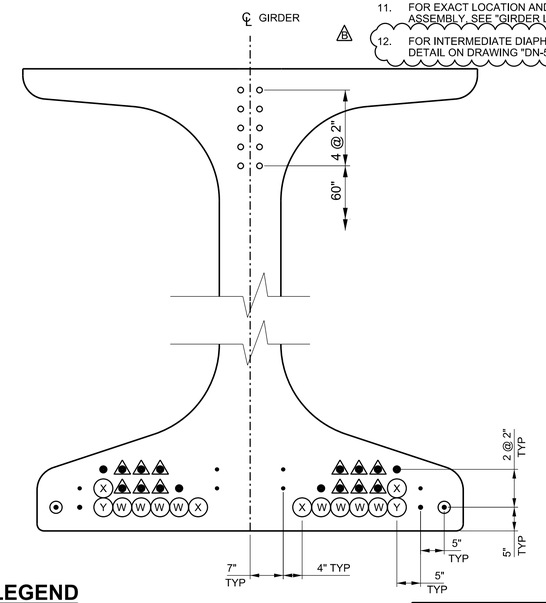

LEGEND

- ● - DENOTES CONTINUOUSLY BONDED STRAND TERMINATED AT END OF GIRDER
- ▲ - DENOTES CONTINUOUSLY BONDED STRAND EXTENDED INTO CIP PIER CAP
- (Y)(X)(W) - DENOTES DEBONDED STRAND
- • - DENOTES CONTINUOUS ADDITIONAL REBARS (#9)
- ⊙ - DENOTES CONTINUOUS ADDITIONAL REBARS (#10)

STRAND LOCATION	DEBONDED LENGTH
(W)	2'-0"
(X)	2'-0"
(Y)	2'-0"

STRAND TEMPLATE & DEBONDING PATTERN

NOTES:

1. STRANDS SHALL BE PLACED AS LOW AS POSSIBLE IN THE STRAND TEMPLATE AND SYMMETRICAL ABOUT GIRDER
2. NO MORE THAN 33% OF THE TOTAL NUMBER OF STRANDS AND 50% OF THE STRANDS PER HORZIONTAL ROW MAY BE DEBONDED
3. STRAND LOCATIONS MAY BE ADJUSTED AS APPROVED BY THE ENGINEER

NO SCALE

Underground Service Alert of Southern California
811 CALL: **TOLL FREE 1-800-422-4133**
TWO WORKING DAYS BEFORE YOU DIG

NOTICE TO CONTRACTOR

PURSUANT TO ASSEMBLY BILL 3019 NO EXCAVATION PERMIT IS VALID UNLESS THE CONTRACTOR CONTACTS AND OBTAINS AN INQUIRY I.D. NUMBER FROM "UNDERGROUND SERVICE ALERT" (1-800-422-4133) AT LEAST TWO WORKING DAYS PRIOR TO COMMENCING EXCAVATION.

FILE NO.:

REVISIONS

NUMBER	DATE	INITIALS	DESCRIPTION	APPROVED	INSTALLED
A	12/2017		ISSUE FOR BID		
B	03/08/18	MVD	GIRDER DETAIL UPDATES		

REFERENCES

BENCHMARK NO.: 3B-98-85 (PT. 400) ELEV.: 140.19 (NAVD 88)

FOUND 3.75" OCS ALUMINUM BENCHMARK DISK STAMPED "3B-98-5", SET IN THE NORTHWESTERLY CORNER OF A 4 FT. BY 8 FT. CONCRETE CATCH BASIN. MONUMENT IS LOCATED IN THE SOUTHEASTERLY CORNER OF THE INTERSECTION OF FRUIT STREET AND THE ATCHINSON TOPEKA AND SANTA FE RAILROAD, 23 FT. EASTERLY OF THE CENTERLINE OF THE RAILWAY, 19.5 FT. SOUTHERLY OF THE CENTERLINE OF FRUIT STREET AND 14.3 FT. WEST OF A POWER POLE (#716815E"). ORANGE COUNTY SURVEYS, PUBLIC WORKS.

REGISTERED PROFESSIONAL ENGINEER MICHAEL VAN DUYN RCE NO. 5950 Exp. 12/31/2018 STRUCTURAL STATE OF CALIFORNIA

HNTB
The HNTB Companies Infrastructure Solutions
200 E. Sandpointe Ave., Ste. 200
Santa Ana, CA 92707
Phone: 714-460-1600

PREPARED UNDER THE SUPERVISION OF: MICHAEL VAN DUYN	DATE
RCE NO.: 5950	12/31/2018
DESIGNED: P. PENCE DRAWN: L. ZHANG CHECKED: J. WANG	10/2017

PUBLIC WORKS DEPARTMENT / COUNTY OF ORANGE / OCTA / DOWNTOWN ORANGE COUNTY SANTA ANA

DN50

SANTA ANA RIVER BRIDGE
OC STREETCAR
GIRDER DETAILS NO. 3

ORANGE COUNTY TRANSPORTATION AUTHORITY

CITY OF SANTA ANA PROJECT NO. 17-6766-C: OC STREETCAR FROM HARBOR BLVD TO SARTC

SHT-DN50-42481-R08.dgn 2/19/2018 9:08:55 AM

NOTES:

1. FOR DETAILS OF THE OCS POLE AND DOWN GUY ANCHORAGE AND REINFORCEMENT, SEE "GIRDER DETAIL NO.5" DRAWING.
2. FOR DECK REINFORCEMENT, SEE "TYPICAL SECTION NO. 1" AND "TYPICAL SECTION NO.2" DRAWINGS.

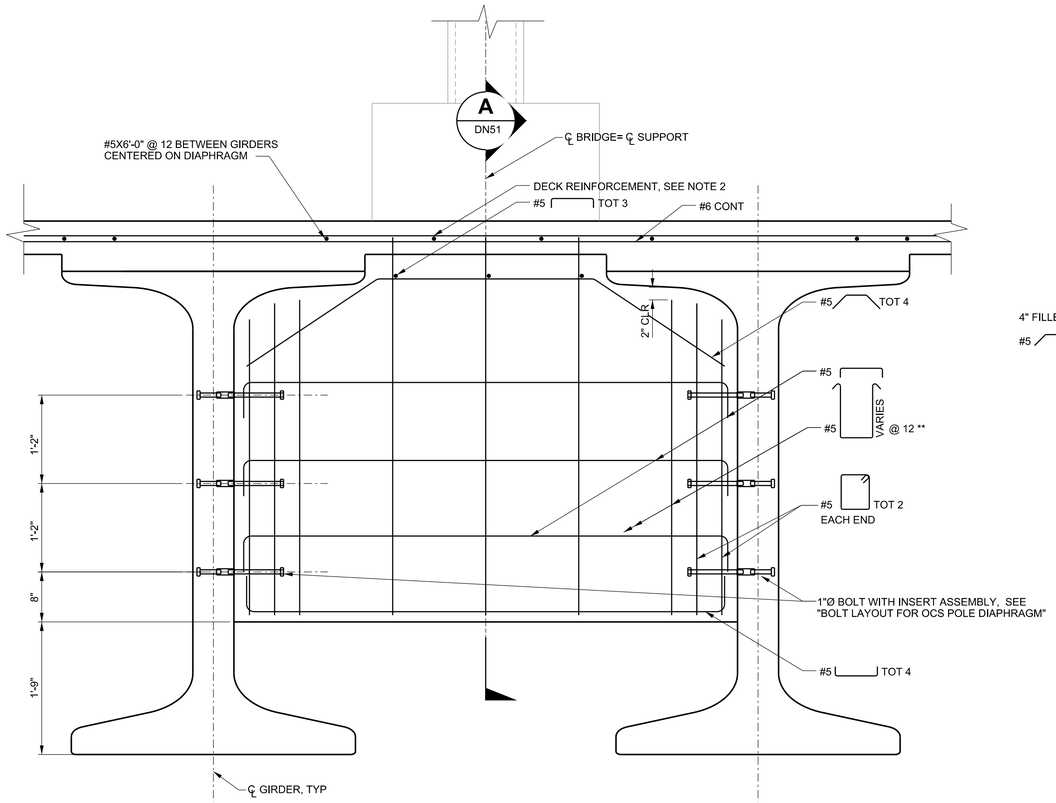

OCS POLE DIAPHRAGM

1"=1'-0"

** HOOK DOWNWARD BELOW GIRDER TOP FLANGE

NOTE:

DIAPHRAGM NORMAL TO DECK GRADE
(OCS POLE FOUNDATION SHOWN, DOWN GUY ANCHOR FOUNDATION SIMILAR)

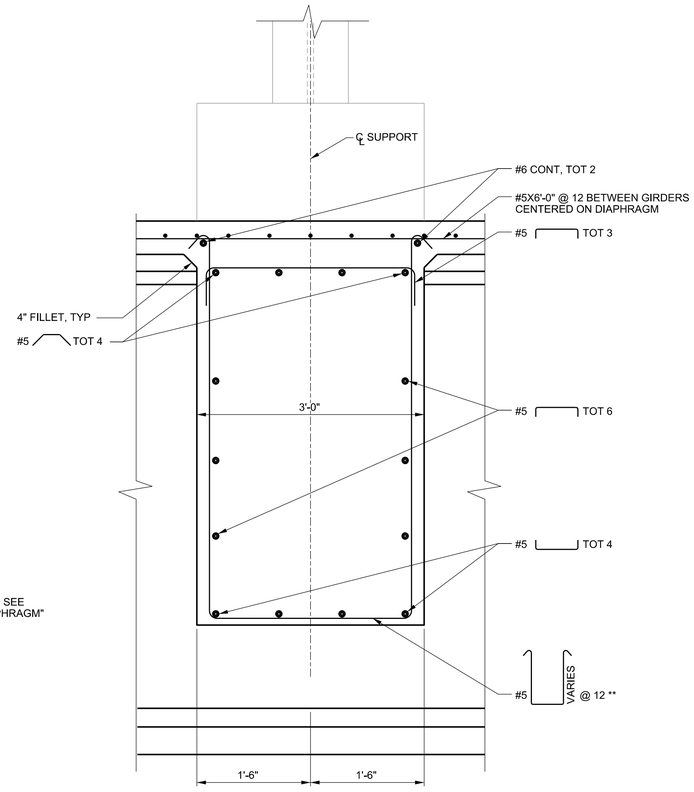

SECTION

1/2" = 1'-0"

A DN51

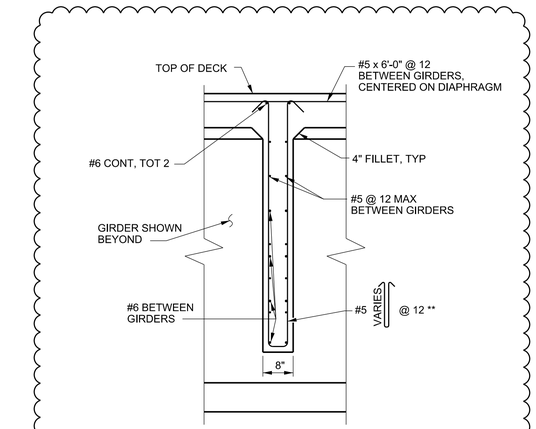

SECTION

NO SCALE

C DN51

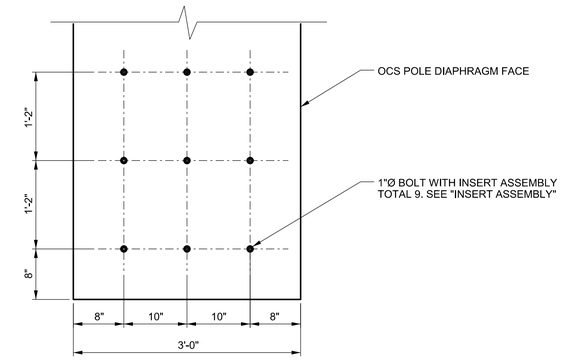

BOLT LAYOUT FOR OCS POLE DIAPHRAGM

1"=1'-0"

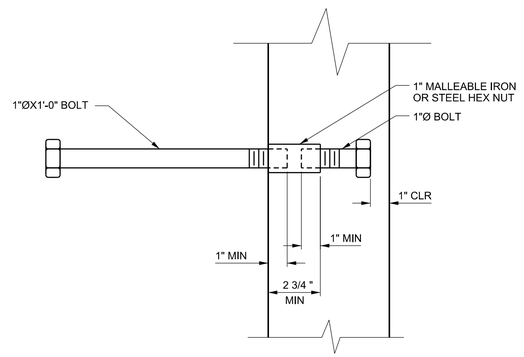

INSERT ASSEMBLY

3"=1'-0"

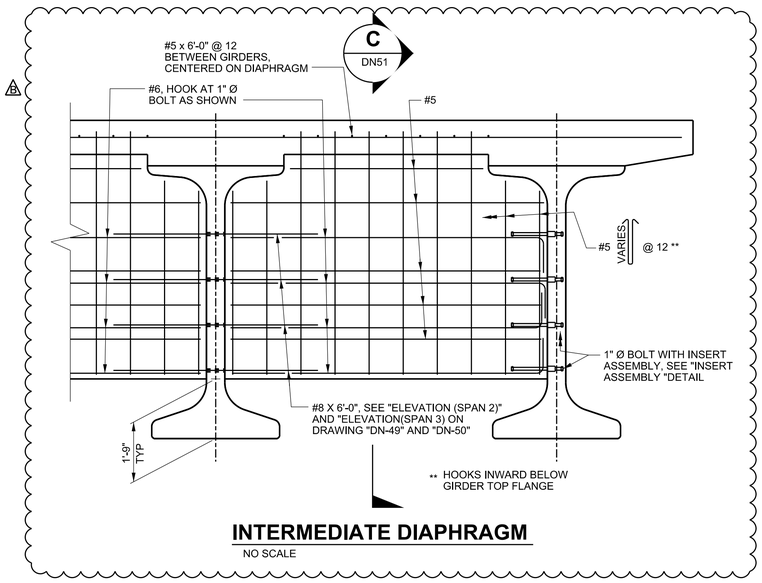

INTERMEDIATE DIAPHRAGM

NO SCALE

Underground Service Alert of Southern California
811
CALL: **TOLL FREE 1-800-422-4133**
TWO WORKING DAYS BEFORE YOU DIG

NOTICE TO CONTRACTOR

PURSUANT TO ASSEMBLY BILL 3019 NO EXCAVATION PERMIT IS VALID UNLESS THE CONTRACTOR CONTACTS AND OBTAINS AN INQUIRY I.D. NUMBER FROM "UNDERGROUND SERVICE ALERT" (1-800-422-4133) AT LEAST TWO WORKING DAYS PRIOR TO COMMENCING EXCAVATION.

REVISIONS

NUMBER	DATE	INITIALS	DESCRIPTION	APPROVED	INSTALLED
A	12/2017		ISSUE FOR BID		
1	03/08/18	MVD	GIRDER DETAIL UPDATES		

REFERENCES

BENCHMARK NO.: 3B-98-85 (PT. 400) ELEV.: 140.19 (NAVD 88)

FOUND 3.75" OCS ALUMINUM BENCHMARK DISK STAMPED "3B-98-5". SET IN THE NORTHWESTERLY CORNER OF A 4 FT. BY 8 FT. CONCRETE CATCH BASIN. MONUMENT IS LOCATED IN THE SOUTHEASTERLY CORNER OF THE INTERSECTION OF FRUIT STREET AND THE ATCHINSON TOPEKA AND SANTA FE RAILROAD, 23 FT. EASTERLY OF THE CENTERLINE OF THE RAILWAY, 19.5 FT. SOUTHERLY OF THE CENTERLINE OF FRUIT STREET AND 14.3 FT. WEST OF A POWER POLE (#716815E"). ORANGE COUNTY SURVEYS, PUBLIC WORKS.

REGISTERED PROFESSIONAL ENGINEER — MICHAEL VAN DUYN — RCE NO. 55950 — Exp. 12/31/2018 — STRUCTURAL — STATE OF CALIFORNIA

HNTB
The HNTB Companies Infrastructure Solutions
200 E. Sandpointe Ave., Ste. 200
Santa Ana, CA 92707
Phone: 714-460-1500

PREPARED UNDER THE SUPERVISION OF: MICHAEL VAN DUYN		DATE
	RCE NO.: 5950	12/31/2018
DESIGNED: P. PENCE DRAWN: L. ZHANG CHECKED: J. WANG		10/2017

SANTA ANA RIVER BRIDGE

OC STREETCAR

GIRDER DETAILS NO. 4

DN51

ORANGE COUNTY TRANSPORTATION AUTHORITY

FILE NO.:

SHT-DN51-62481-R0B.dgn 2/19/2018 9:11:10 AM SHT-DN51-62481-R0B.dgn

CITY OF SANTA ANA PROJECT NO. 17-6766-C: OC STREETCAR FROM HARBOR BLVD TO SARTC

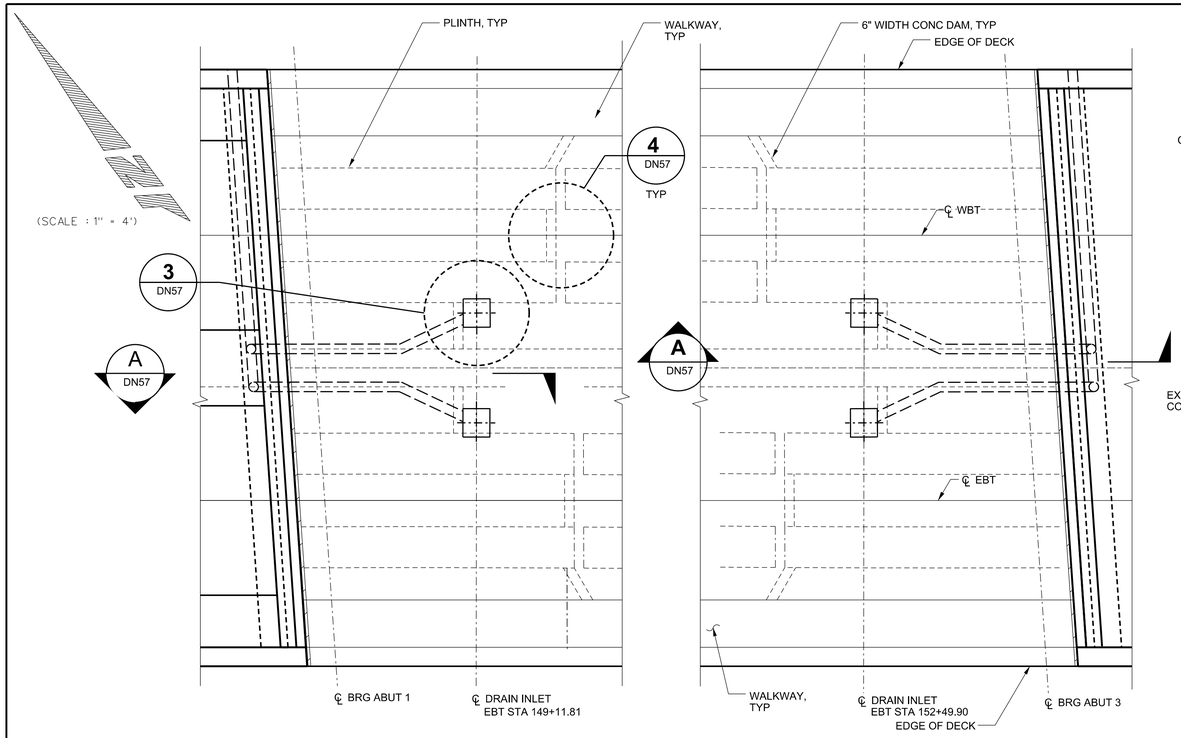

PLAN
1/4"=1'-0"

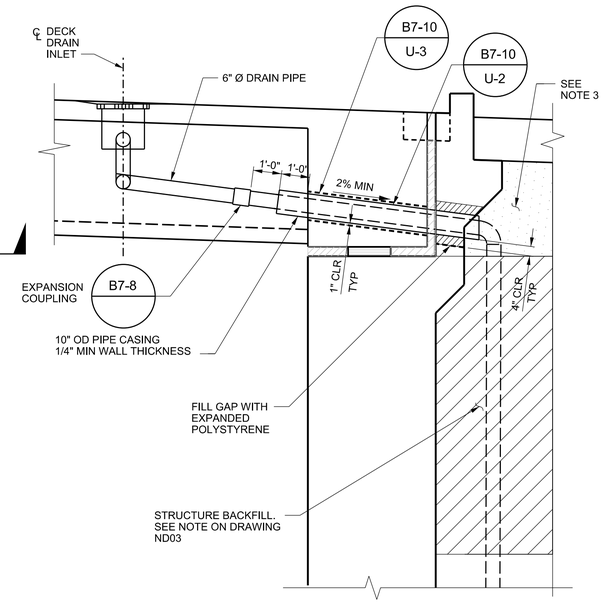

SECTION
NO SCALE

A DN57

ABUTMENT 1 SHOWN, ABUTMENT 4 SIMILAR

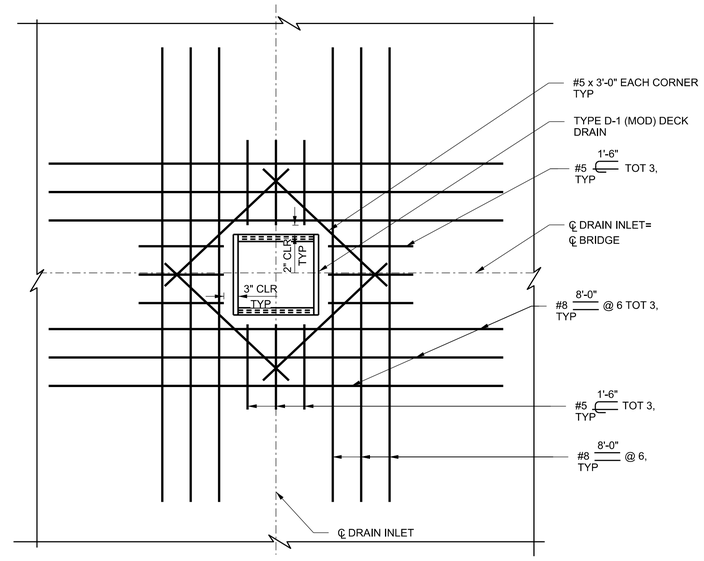

DETAIL 3
1" = 1'-0"

DN57

NOTES:

1. DECK REINFORCEMENT NOT SHOWN FOR CLARITY.
2. REBARS EXTENDING FROM PLINTHS SHALL BE INSTALLED WITH SUFFICIENT CLEARANCE BETWEEN ANY ADJACENT REBARS TO PREVENT CREATING A CURRENT PATH THAT CAN POTENTIALLY IMPACT TRAIN CONTROL FUNCTIONALITY.
3. FOR TRACK SECTION DETAILS, SEE DRAWINGS CX04 AND TD24.
4. LOCATE REINFORCING PRIOR TO DRILLING. STRUCTURE REINFORCEMENT SHALL NOT BE DAMAGED.
5. SECURE EACH END OF CONCRETE DAM WITH 12" - #4 BAR DOWELED IN PLINTH AND/OR DECK EDGE.

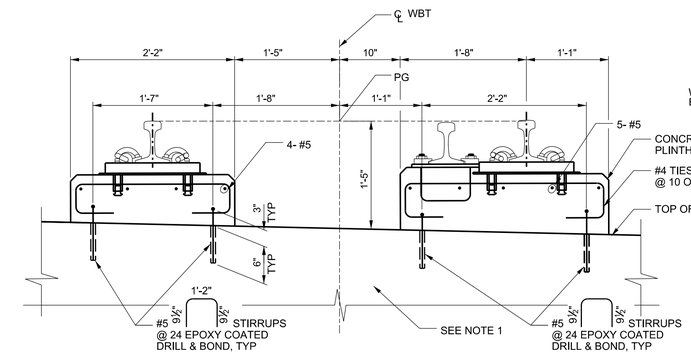

DETAIL 1
1" = 1'-0"

DN45 DN46 DN57

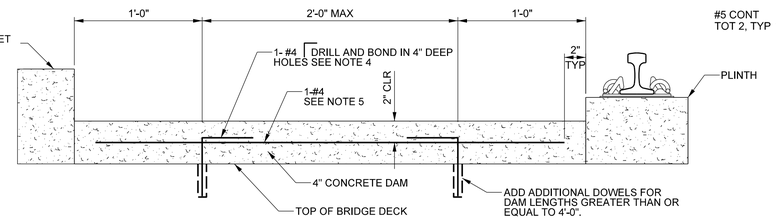

CONCRETE DAM REINFORCEMENT DETAIL 4
NO SCALE

DN57

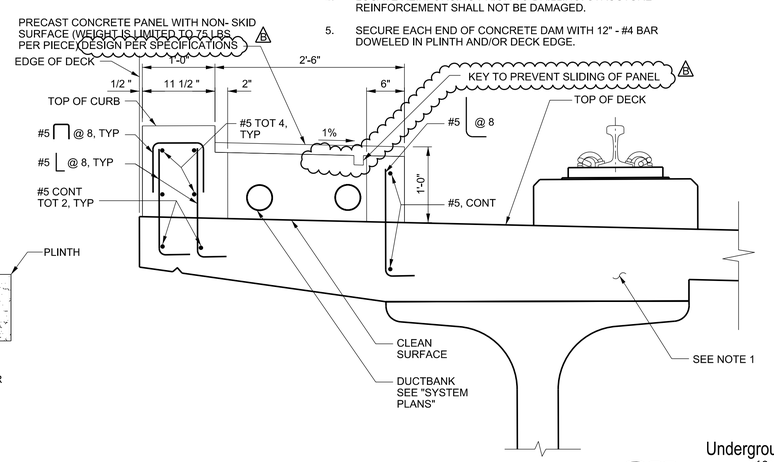

DETAIL 2
1" = 1'-0"

DN45 DN46 DN57

Underground Service Alert of Southern California
811
CALL: **TOLL FREE 1-800-422-4133**
TWO WORKING DAYS BEFORE YOU DIG

NOTICE TO CONTRACTOR

PURSUANT TO ASSEMBLY BILL 3019 NO EXCAVATION PERMIT IS VALID UNLESS THE CONTRACTOR CONTACTS AND OBTAINS AN INQUIRY I.D. NUMBER FROM "UNDERGROUND SERVICE ALERT" (1-800-422-4133) AT LEAST TWO WORKING DAYS PRIOR TO COMMENCING EXCAVATION.

FILE NO.:

REVISIONS

NUMBER	DATE	INITIALS	DESCRIPTION	APPROVED	INSTALLED
A	12/2017		ISSUE FOR BID		
B	03/08/18	MVD	PRECAST CONCRETE PANEL UPDATES		

REFERENCES

BENCHMARK NO.: 3B-98-85 (PT. 400) ELEV.: 140.19 (NAVD 88)

FOUND 3.75" OCS ALUMINUM BENCHMARK DISK STAMPED "3B-98-5", SET IN THE NORTHWESTERLY CORNER OF A 4 FT. BY 8 FT. CONCRETE CATCH BASIN. MONUMENT IS LOCATED IN THE SOUTHEASTERLY CORNER OF THE INTERSECTION OF FRUIT STREET AND THE ATCHINSON TOPEKA AND SANTA FE RAILROAD, 23 FT. EASTERLY OF THE CENTERLINE OF THE RAILWAY, 19.5 FT. SOUTHERLY OF THE CENTERLINE OF FRUIT STREET AND 14.3 FT. WEST OF A POWER POLE (#716815E"). ORANGE COUNTY SURVEYS, PUBLIC WORKS.

REGISTERED PROFESSIONAL ENGINEER MICHAEL VAN DUYN RCE NO. 55950 Exp. 12/31/2018 STRUCTURAL STATE OF CALIFORNIA

HNTB
The HNTB Companies Infrastructure Solutions
200 E. Sandpointe Ave., Ste. 200
Santa Ana, CA 92707
Phone: 714-460-1600

PREPARED UNDER THE SUPERVISION OF: MICHAEL VAN DUYN		DATE
	RCE NO.: 5950	12/31/2018
DESIGNED: P. PENCE DRAWN: L. ZHANG	CHECKED: J. WANG	10/2017

PUBLIC WORKS DEPARTMENT COUNTY OF ORANGE

OCTA

DOWNTOWN ORANGE COUNTY SANTA ANA

DN57

SANTA ANA RIVER BRIDGE

OC STREETCAR

MISCELLANEOUS DETAILS

ORANGE COUNTY TRANSPORTATION AUTHORITY

CITY OF SANTA ANA PROJECT NO. 17-6766-C: OC STREETCAR FROM HARBOR BLVD TO SARTC

2/19/2018 9:12:27 AM SHT-DN57-62481-R08.dgn

SHT-DN57-62481-R08.dgn 2/19/2018

EXHIBIT L

TEMPORARY CONSTRUCTION EASEMENTS AND PRIVATE PROPERTY WORK REQUIREMENTS

EXHIBIT L-A

RIGHT OF WAY REQUIREMENTS MAP

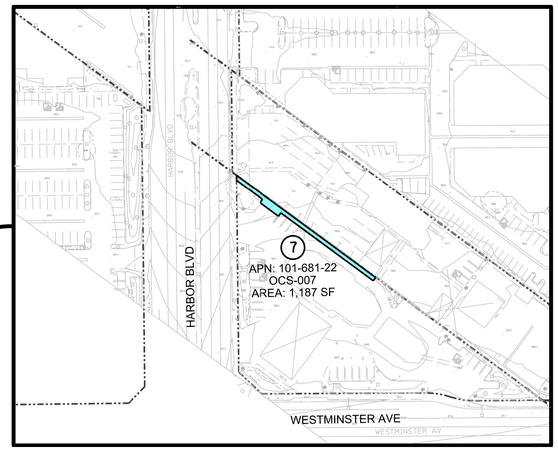

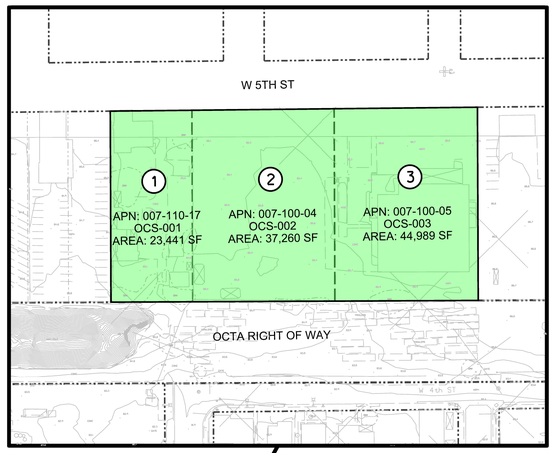

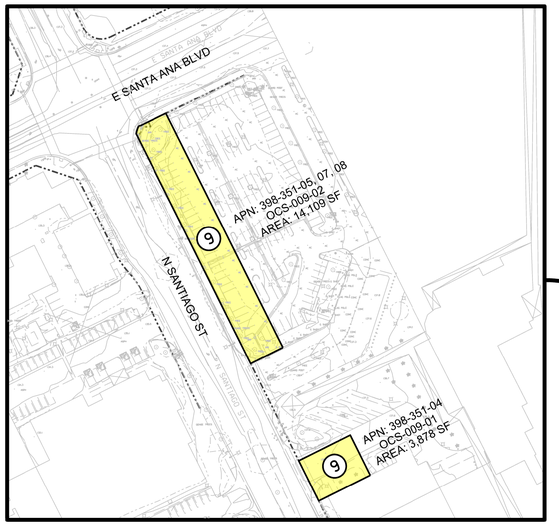

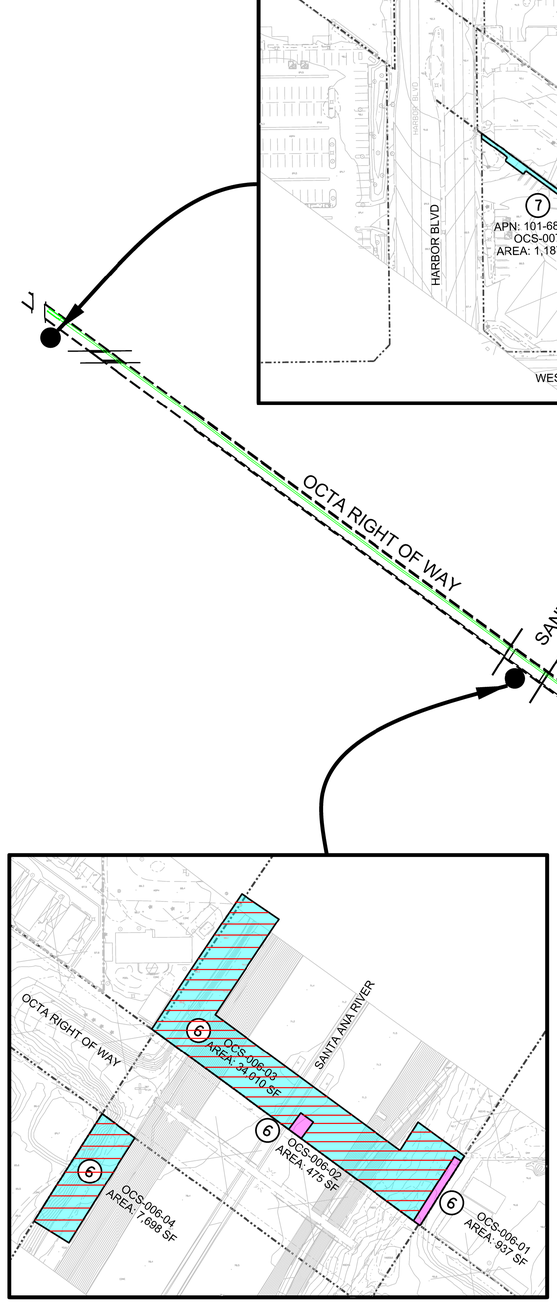

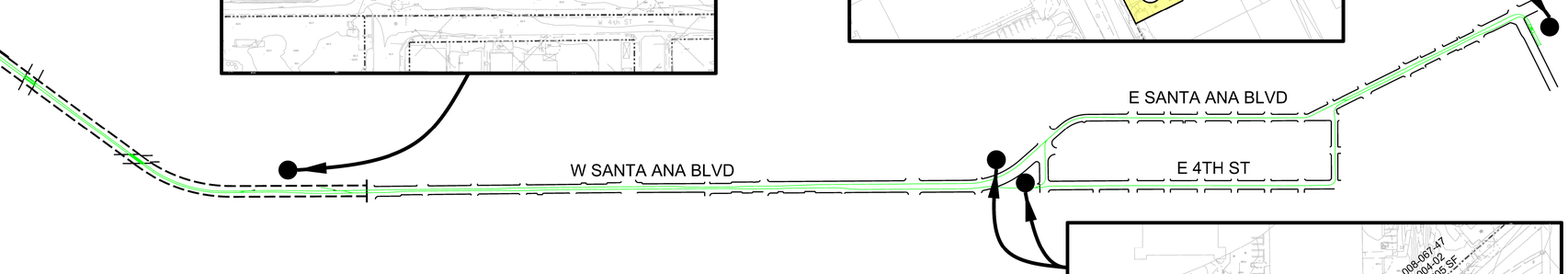

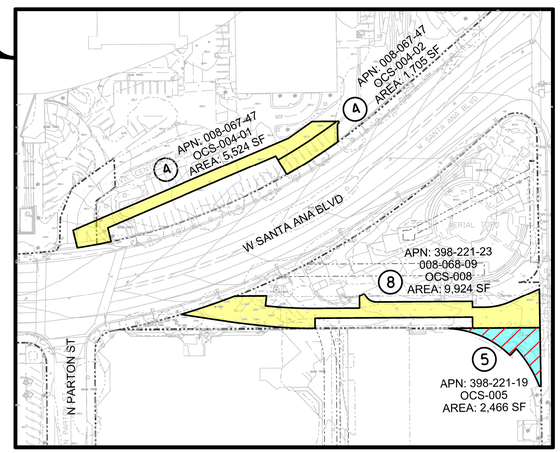

ID	PARCEL NO.	OWNER	TITLE CODE	AREA REQUIRED (SF)	REMARKS
1	OCS-001	NAVARRO, SALVADOR	FEE	23,441	PURCHASE FOR MSF
2	OCS-002	VALDIVIA, RUDY	FEE	37,260	PURCHASE FOR MSF
3	OCS-003	VALDIVIA, RUDY	FEE	44,989	PURCHASE FOR MSF
4	OCS-004-01	CITY OF SANTA ANA	EASEMENT	5,524	DUCTBANK EASEMENT FOR TPSS
	OCS-004-02	CITY OF SANTA ANA	EASEMENT	1,705	PERMANENT EASEMENT FOR TPSS
~~5~~	~~OCS-005~~	~~NOVA ACADEMY~~	~~TCE~~	~~2,466~~	~~TEMPORARY CONSTRUCTION EASEMENT TO REGRADE PLAZA~~
6	OCS-006-01	ORANGE COUNTY FLOOD CONTROL DISTRICT	EASEMENT	937	PERMANENT EASEMENT FOR STORM DRAIN
	OCS-006-02	ORANGE COUNTY FLOOD CONTROL DISTRICT	EASEMENT	475	PERMANENT EASEMENT FOR BRIDGE PIER DEBRIS NOSE
	~~OCS-006-03~~	~~ORANGE COUNTY FLOOD CONTROL DISTRICT~~	~~TCE~~	~~34,010~~	~~TEMPORARY CONSTRUCTION EASEMENT FOR BRIDGE~~
	~~OCS-006-04~~	~~ORANGE COUNTY FLOOD CONTROL DISTRICT~~	~~TCE~~	~~7,698~~	~~TEMPORARY CONSTRUCTION EASEMENT FOR BRIDGE~~
7	OCS-007	76 STATION	TCE	1,187	TEMPORARY CONSTRUCTION EASEMENT TO REPLACE EXISTING RETAINING WALL
8	OCS-008	CITY OF SANTA ANA	EASEMENT	9,924	PERMANENT EASEMENT FOR TRACK, SYSTEMS, AND PLATFORM
9	OCS-009-01	CITY OF SANTA ANA	EASEMENT	3,878	PERMANENT EASEMENT FOR TPSS
	OCS-009-02	CITY OF SANTA ANA	EASEMENT	14,109	PERMANENT EASEMENT FOR TRACK, SYSTEMS, AND PLATFORM

(10/12/2017) DRAFT

LEGEND:

NOTE: TCE FOR NOVA ACADEMY HAS BEEN DELETED
TCEs FOR OCFCD HAVE BEEN REPLACED BY AN ENCROACHMENT PERMIT

- FEE
- PERMANENT EASEMENT OCFCD
- PERMANENT EASEMENT
- TEMPORARY CONSTRUCTION EASEMENT

HDR | OCTA | Downtown Orange County Santa Ana | Garden Grove

OC STREETCAR

RIGHT OF WAY REQUIREMENTS

DRAWING NO.
SHEET NO.
SCALE NTS

EXHIBIT L-1

OCFCD TEMPORARY CONSTRUCTION EASEMENTS

TEMPORARY CONSTRUCTION EASEMENT

ATTACHMENT TO LEGAL DESCRIPTION

Assessor Parcel No.: SANTA ANA RIVER

This temporary construction easement shall be in, on, over, under, and across that certain real property described in Exhibit "A" and depicted in Exhibit "B" attached hereto subject to the rights and limitations set forth herein ("TCE"). The TCE shall be used by the Orange County Transportation Authority and its employees, agents, representatives, contractors, successors and assigns (collectively, "OCTA" in connection with the construction of the OC Streetcar ("Project"). The TCE shall be for a period of thirty-six (36) months, subject to the rights and limitations set forth below and shall be non-exclusive. Specifically, the actual physical construction activities within the TCE area shall be limited to "NON-STORM-SEASON" (May 1st through September 30th (the "Construction Period"). No work shall be performed between October 1st and April 30th without prior authorization and approval obtained from the County. During the Construction Period, OCTA's use and occupancy of the TCE will be non-exclusive, subject to the rights and limitations set forth below.

Rights and Limitations of Use and Occupancy of TCE

- OCTA shall provide the District a minimum of thirty (30)-days written notice as to when the Construction Period will commence.
- OCTA agrees to the Construction Period referenced above, all conditions outlined in the agreement, cooperative agreement and encroachment permit.
- During the Construction Period, OCTA may place a temporary fence around the TCE area.
- Except as to those improvements identified below as being protected in place, improvements within the TCE area will be removed as needed by OCTA to allow for construction activities. All improvements so removed shall be included in the compensation paid by OCTA for this TCE.
- The following improvements within the TCE area will be protected in place:
    - OCSD facilities
    - OCWD facilities
    - City of Santa Ana sewer facilities
    - Santa Ana River Trail
- All Orange County Flood Control ("District") improvements disturbed, damaged, vandalized or removed as a result of OCTA's activities within, upon, under or over District's ROW shall be repaired, restored or replaced at OCTA's expense in conformance with Orange County Public Works (OC Public Works) Standard plans and to the satisfaction of the Director of OC Public Works or his designee (herein after "Designee") within sixty (60) calendar days of the issuance of written notice by Director. If OCTA fails to repair, restore or replace District's improvements within 60 calendar days, Director may, in his sole and absolute discretion, cause the repair, restoration or replacement of District's improvements to be completed by District's personnel or outside contractors and OCTA shall be solely responsible

for these costs and expenses. OCTA agrees that in an emergency situation which threatens the public's health, safety or welfare as determined by Director in his sole and absolute discretion, Director shall be permitted to cause the repair, replacement or restoration of DISTRICT's improvements without prior notice to OCTA and OCTA shall be solely responsible for the cost of such repair, restoration or replacement in accordance with the procedures described above.

- OCTA agrees that if any of OCTA's improvements are disturbed, damaged or removed by District during the course of District's operating, maintaining, repairing, improving, restoring or enlarging District's improvements within, upon, over, or under District's ROW, OCTA shall be responsible for replacing, repairing, restoring or removing OCTA's improvements to the satisfaction of Director solely at OCTA's expense within sixty (60) calendar days of receiving written notice from Director.
- OCTA's activities within District ROW allowed in this RCE shall be performed during the NON-STORM-SEASON (May 1st through September 30th). No work shall be performed between October 1st and April 30th without prior authorization and approval obtained from the assigned County inspector.
- If any approved activity within a bikeway or trail area is anticipated to have an impact or disruption upon normal recreational use, prior to OCTA's activities within, upon, under or over District's ROW, OCTA shall submit in writing a detailed Traffic Control Plan for the written approval of Director. Upon receipt of Director's written approval, OCTA shall implement the approved Traffic Control Plan. OCTA shall not conduct any activity within, upon, under or over District's ROW until it has implemented the approved Traffic Control Plan.
- No construction materials are to be stored in a way that impedes and/or interferes with bikeway use, channel inspection or maintenance operations.
- It shall be the responsibility of OCTA to dispose of any of the existing chain link fencing removed. However, if it is determined by inspection staff that the fence condition is good for salvage, OCTA shall use caution and remove the fencing fabric, roll it up in 50' long rolls and deliver the material to OC Public Works/Operations and Maintenance Yard at 2301 Glassell, Orange, CA 92865, at OCTA's sole cost and expense within five working days following removal. OCTA shall contact XXXXXXX XXXXXXXX at (XXX) XXX-XXXX 48 hours in advance to coordinate delivery. OCTA shall deliver the chain link fencing removed and no substitute shall be accepted.
- Any existing chain link fencing shall include the installation of new corner posts in conformance with OC Public Works Std. Plan 600-0-OC and be repaired to the satisfaction of the assigned inspector.
- OCTA shall provide emergency access to Police, Fire and District personnel during RCE period.
- District access gates are to be immediately locked upon entering or exiting District ROW.
- Vehicular speeds on District access roads shall not exceed a maximum of 10 MPH.
- OCTA shall be required to yield the right-of-way to recreational users in cases where the District access road is also designated as a bikeway or riding/hiking trail. In such cases, OCTA shall drive vehicles off to the right side of the access

road/bikeway/trail improvements, stop and allow the recreational user to pass by prior to commencing to the OCTA's desired location.

- Prior to the termination of the Construction Period, OCTA will remove from the TCE area all construction equipment and materials including, without limitation, any temporary fence, any temporary improvements, and all construction-related debris. The TCE area will be restored to a condition that is as functionally equivalent as is practicable to its condition prior to commencement of the construction activities, as indicated above, unless otherwise agreed to in writing between OCTA and owner.

OCTA expressly reserves the right to convey, transfer, or assign the TCE subject to the same rights and limitations described herein.

PSOMAS

EXHIBIT 'A'

LEGAL DESCRIPTION

TEMPORARY CONSTRUCTION EASEMENTS- SANTA ANA RIVER

Parcel 1:

In the City of Santa Ana, County of Orange, State of California, being those portions of the Santa Ana River as described in the County of Orange Board of Supervisors Resolution No. 101011 recorded in Book 4386, Page 151 through 158, of Official Records of said county and as shown on Record of Survey No. 92-1000 filed in Book 142, Pages 36 through 41, of Records of Survey of said county, described as follows:

Beginning at the intersection of the northwesterly line of the Santa Ana River as shown on said Record of Survey with the northeasterly line of the land described as Parcel 20A in the Final Order of Condemnation recorded in Document No. 83-007859, Official Records of said county; thence along said northeasterly line South 52°44'09" East 407.86 feet to the southeasterly line of the Santa Ana River as shown on said Record of Survey, said point being on a non-tangent curve concave southeasterly having a radius of 11459.16 feet, a radial line to said curve bears North 56°57'48" West; thence northeasterly 101.24 feet along said curve and southeasterly line through a central angle of 00°30'22" to a line parallel with and 101.00 feet northeasterly of said northeasterly line; thence North 52°44'09" West 70.15 feet along said parallel line to a non-tangent curve concave southeasterly having a radius of 11529.16 feet, a radial line to said curve bears North 56°26'00" West, said curve being concentric with and 70.00 feet northwesterly of the said southeasterly line; thence southwesterly 41.09 feet along said curve through a central angle of 00°12'15" to a line parallel with and 60.00 feet northeasterly of said northeasterly line; thence along said parallel line North 52°44'09" West 281.11 feet to a non-tangent curve concave southeasterly having a radius of 11403.66 feet, a radial line to said curve bears North 55°42'47" West, said curve being concentric with and 55.50 feet southeasterly of the said northwesterly line; thence northeasterly 141.16 feet along said curve through a central angle of 00°42'33"; thence along a radial line from said curve North 55°00'14" West 55.50 feet to said northwesterly

PSOMAS

line, also being the beginning of a non-tangent curve concave southeasterly having a radius of 11459.16 feet, a radial line to said curve bears North 55°00'14" West; thence southwesterly 199.05 feet along said curve through a central angle of 00°59'43" feet to the **Point of Beginning.**

Containing 3,091 square feet, more or less.

Parcel 2:

In the City of Santa Ana, County of Orange, State of California, being those portions of the Santa Ana River as described in the County of Orange Board of Supervisors Resolution No. 101031 recorded in Book 4386, Page 15 through 158, of Official Records of said county, together with that portion of land described in Document No. 94-320770, Official Records of said county, together with that portion of land described in Document No. 94-003830, Official Records of said county and as shown on Record of Survey filed in Book 99, Pages 22 through of Records of Survey of said county, described as follows:

Beginning at the intersection of the northwesterly line of the Santa Ana River as shown on said Record of Survey with the southwesterly line of the land described as Parcel 20B in the Final Order of Condemnation recorded in Document No. 83-007859, Official Records of said county; thence along said southwesterly line South 52°44'09" East 50.10 feet to a non-tangent curve concave southeasterly having a radius of 11609.20 feet, a radial line to said curve bears North 56°26'33" West, said curve being concentric with and 50.00 feet southeasterly of said northwesterly line; thence southwesterly 152.01 feet along said curve through a central angle of 00°45'01"; thence along a radial line from said curve North 57°11'33" West 50.00 feet to said northwesterly line, also being the beginning of a non-tangent curve concave southeasterly having a radius of 11659.20 feet, a radial line to said curve bears North 57°11'33" West; thence northeasterly 155.90 feet along said curve and northwesterly line through a central angle of 00°45'58" feet to the **Point of Beginning.**

PSOMAS

Containing 7,698 square feet, more or less.

All as shown on Exhibit "B" attached hereto and made a part thereof.

This legal description is not intended to be used in the conveyance of land in violation of the Subdivision Map Act of the State of California.

This legal description was prepared by me or under my direction.

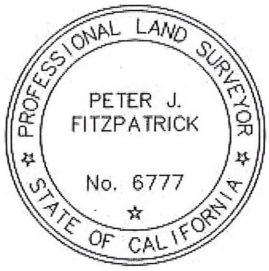

Peter J. Fitzpatrick

Sept. 26, 2017

Peter J. Fitzpatrick, PLS 6777 Date

EXHIBIT "B"

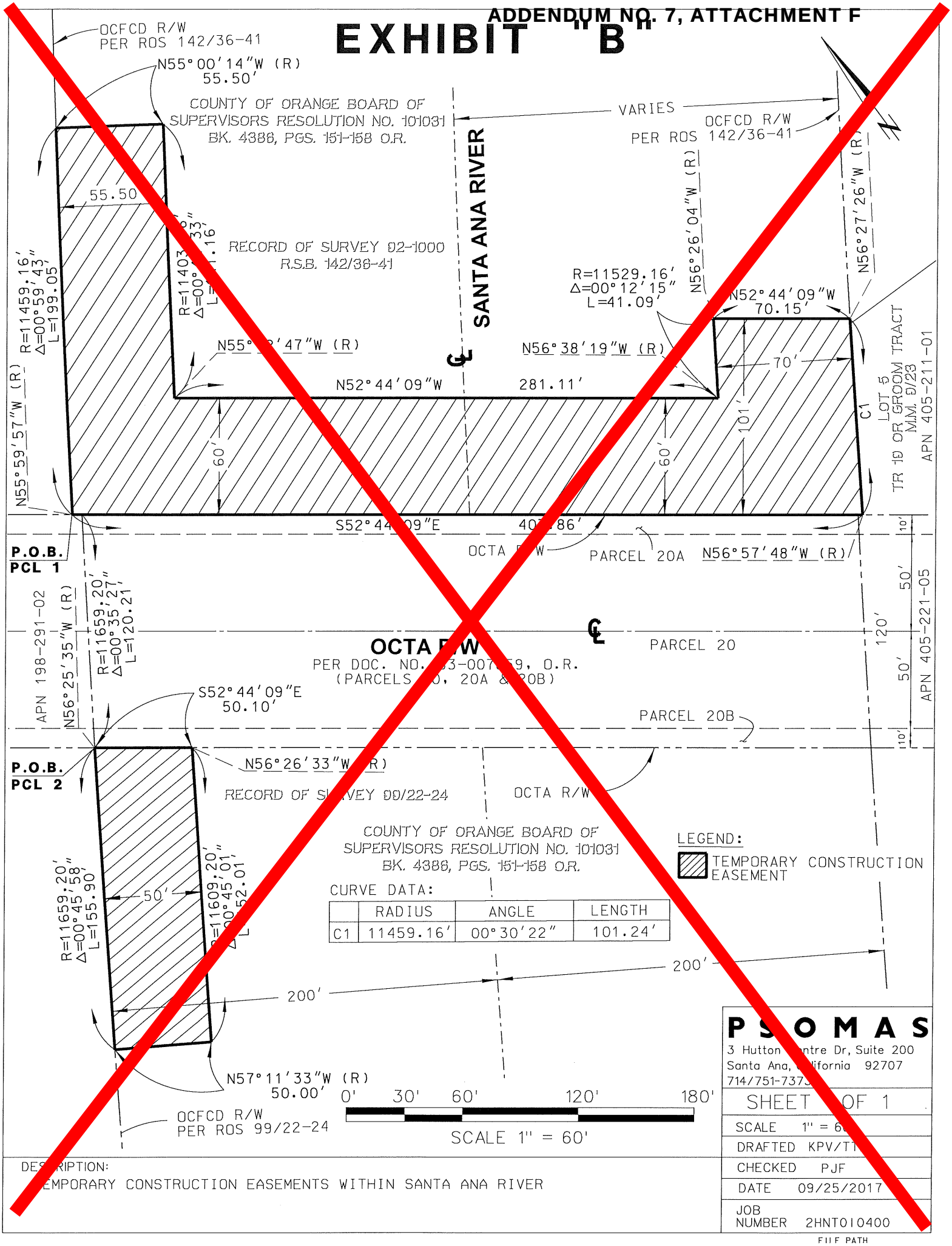

	RADIUS	ANGLE	LENGTH
C1	11459.16'	00°30'22"	101.24'

DESCRIPTION:
TEMPORARY CONSTRUCTION EASEMENTS WITHIN SANTA ANA RIVER

PSOMAS
3 Hutton Centre Dr, Suite 200
Santa Ana, California 92707
714/751-7373

SHEET	OF 1
SCALE	1" = 60'
DRAFTED	KPV/TT
CHECKED	PJF
DATE	09/25/2017
JOB NUMBER	2HNT010400

FILE PATH

EXHIBIT L-2

76 STATION TEMPORARY CONSTRUCTION EASEMENT

TEMPORARY CONSTRUCTION EASEMENT

ATTACHMENT TO LEGAL DESCRIPTION

Assessor Parcel No.: 101-681-22

This temporary construction easement shall be in, on, over, under, and across that certain real property described in Exhibit "A1" and depicted in Exhibit "A2" attached hereto, subject to the rights and limitations set forth herein ("TCE"). The TCE shall be used by the Orange County Transportation Authority and its employees, agents, representatives, contractors, successors and assigns (collectively, "OCTA" in connection with the construction of the OC Streetcar ("Project"). The TCE shall be for a period of sixty (36) months, a portion of which shall be exclusive (subject to the rights and limitations set forth below) and a portion of which shall be non-exclusive. Specifically, the actual physical construction activities within the TCE area shall be limited to four (4) weeks within the thirty-six (36) month TCE period (the "Construction Period). During the Construction Period, OCTA's use and occupancy of the TCE will be exclusive, subject to the rights and limitations set forth below. OCTA's use and occupancy of the TCE during the remaining thirty-five (35) months of the TCE period will be non-exclusive.

Rights and Limitations of Use and Occupancy of TCE:

- OCTA shall provide the owner(s) and occupant(s) of the property subject to this TCE a minimum of thirty (30)-days written notice as to when the Construction Period will commence.
- Should OCTA require additional time beyond the Construction Period referenced above, OCTA shall notify owner 30 days in advance of the need and agree to pay the agreed to per month rate pursuant to the agreement.
- During the Construction Period, OCTA may place a temporary fence around the TCE area.
- Reasonable pedestrian access to the property shall be maintained at all times
- Access to the TCE area shall be from OCTA right of way.
- Driveway access will be maintained at all times, with the exception of the north westerly driveway connecting this parcel with the adjoining OCTA parcel to the north. This driveway will be closed in accordance with the terms of license # _____ that will be terminated by OCTA.
- Drive-thru access along the northerly property line will be maintained at all times.
- The following improvements within the TCE area will be removed as needed by OCTA to allow for construction activities. All improvements so removed shall be included in the compensation paid by OCTA for this TCE.
    - Approximately 130 feet of existing masonry wall and interfering portion of the wall footing as depicted in Attachment B
    - Approximately two (2) concrete steps approximately five (5) feet in length along the northerly property line as depicted in Attachment B
- The following improvements within the TCE area will be protected in place:
    - Electrical pad and equipment in the north-west portion of the property

  - Portions of the curb along the northerly property line as depicted in attached Exhibit B
  - Portions of the existing block wall along the northerly property line as depicted in the attached Exhibit B
  - Shrubs along the northerly property line
- The following improvements within the TCE area will be constructed and/or replaced in kind by OCTA:
  - Concrete curbing across the closed northwesterly driveway
  - Approximately 5 feet of curbing and concrete paving to match existing where existing steps are located as depicted in the attached Exhibit B
- Drainage patterns and/or systems will be maintained during construction and restored to pre-existing conditions.
- Prior to the termination of the Construction Period, OCTA will remove from the TCE area all construction equipment and materials including, without limitation, any temporary fence, any temporary improvements, and all construction-related debris. The TCE area will be restored to a condition that is as functionally equivalent as is practicable to its condition prior to commencement of the construction activities, as indicated above, unless otherwise agreed to in writing between OCTA and owner.

OCTA expressly reserves the right to convey, transfer, or assign the TCE subject to the same rights and limitations described herein.

PSOMAS

EXHIBIT 'A'

LEGAL DESCRIPTION

TEMPORARY CONSTRUCTION EASEMENT

In the City of Garden Grove, County of Orange, State of California, being that portion of Parcel 1 as shown on Parcel Map No. 97-235 filed in Book 308, Pages 27 and 28 of Parcel Maps, records of said county, described as follows:

Beginning at the northern most corner of said Parcel 1; thence along the northeasterly line of said Parcel 1 South 52°42'36" East 211.34 feet; thence South 37°17'24"West 5.00 feet to a line parallel with and 5.00 feet southwesterly of said northeasterly line; thence along said parallel line North 52°42'36" West 140.00 feet; thence South 37°17'24" West 5.00 feet to a line parallel with and 10.00 feet southwesterly of said northeasterly line; thence along said parallel line North 52°42'36" West 28.00 feet; thence North 37°17'24" East 5.00 feet to a line parallel with and 5.00 feet southwesterly of said northeasterly line; thence along said parallel line North 52°42'36" West 39.58 feet to the westerly line of said Parcel 1; thence along said westerly line North 00°21'19" East 6.26 feet to the **Point of Beginning.**

Containing 1,187 square feet, more or less.

All as shown on Exhibit "B" attached hereto and made a part thereof.

This legal description is not intended to be used in the conveyance of land in violation of the Subdivision Map Act of the State of California.

This legal description was prepared by me or under my direction.

Jeremy L Evans

Jeremy L. Evans, PLS 5282

6.15.2017

Date

EXHIBIT "B"

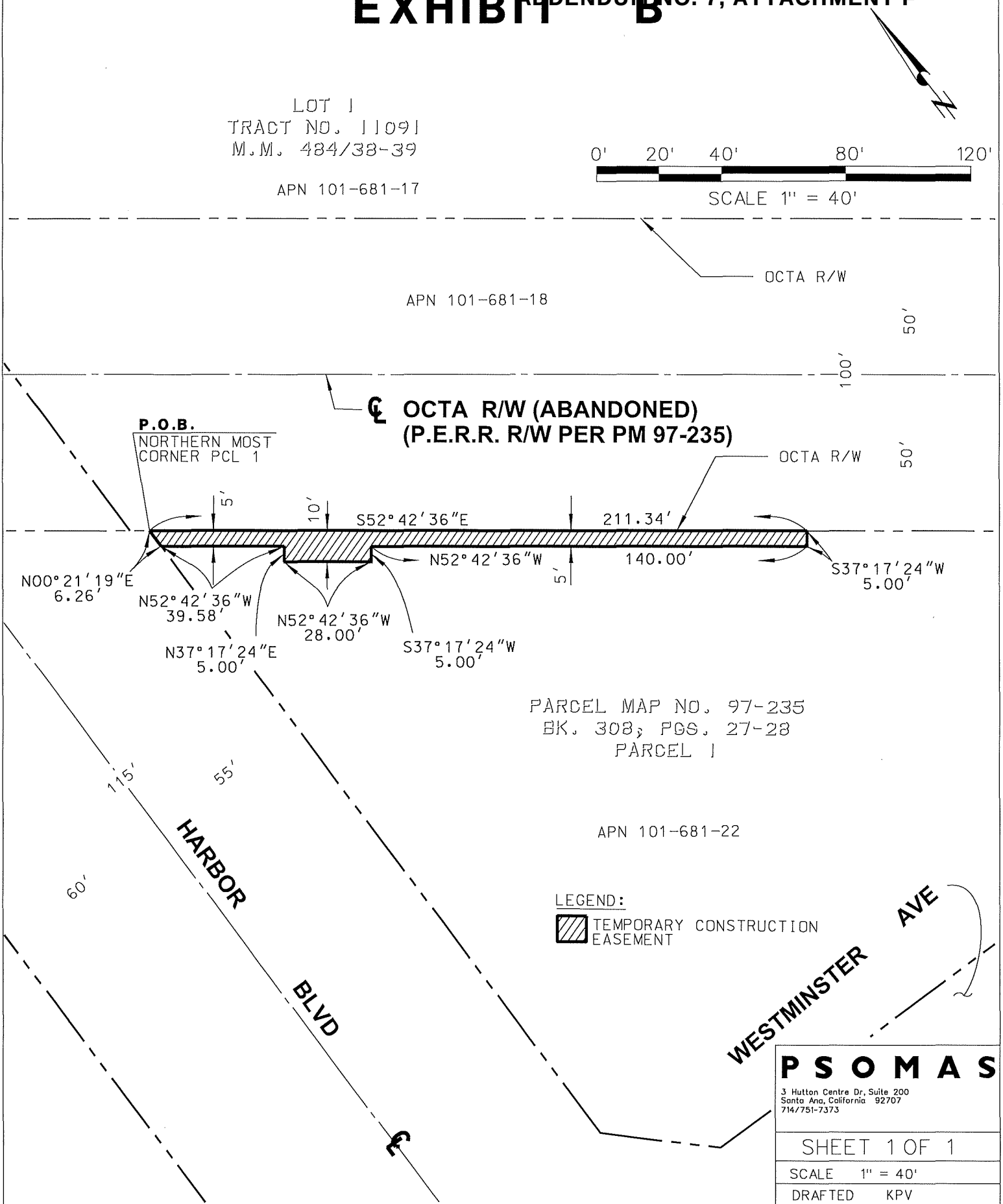

DESCRIPTION:
TEMPORARY CONSTRUCTION EASEMENT FOR APN 101-681-22

PSOMAS
3 Hutton Centre Dr, Suite 200
Santa Ana, California 92707
714/751-7373

SHEET	1 OF 1
SCALE	1" = 40'
DRAFTED	KPV
CHECKED	JLE
DATE	06/15/2017
JOB NUMBER	2HNT010400

FILE PATH

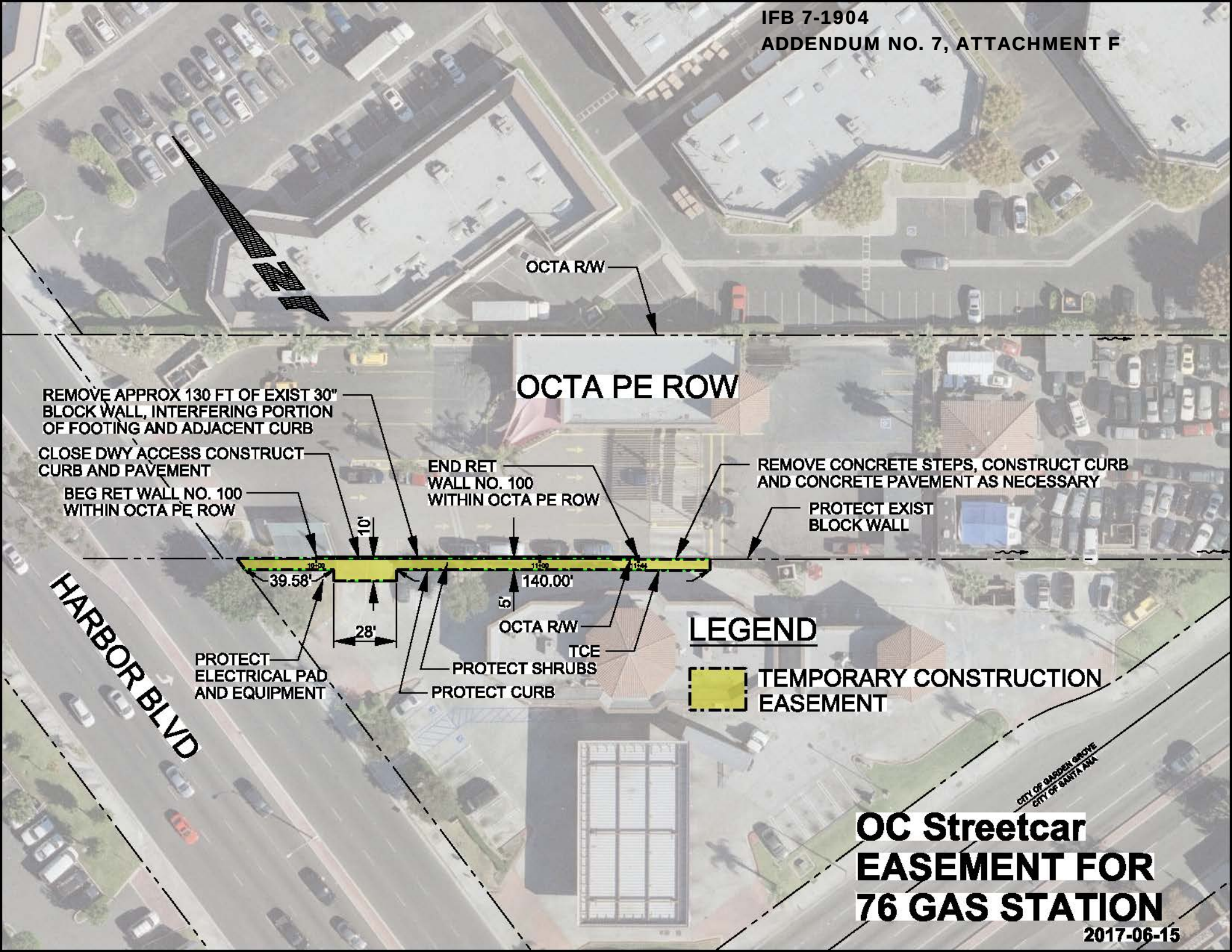
OCTA R/W
OCTA PE ROW
REMOVE APPROX 130 FT OF EXIST 30" BLOCK WALL, INTERFERING PORTION OF FOOTING AND ADJACENT CURB
CLOSE DWY ACCESS CONSTRUCT CURB AND PAVEMENT
BEG RET WALL NO. 100 WITHIN OCTA PE ROW
END RET WALL NO. 100 WITHIN OCTA PE ROW
REMOVE CONCRETE STEPS, CONSTRUCT CURB AND CONCRETE PAVEMENT AS NECESSARY
PROTECT EXIST BLOCK WALL
10'
39.58'
140.00'
5'
28'
OCTA R/W
TCE
PROTECT ELECTRICAL PAD AND EQUIPMENT
PROTECT SHRUBS
PROTECT CURB
HARBOR BLVD
LEGEND
TEMPORARY CONSTRUCTION EASEMENT
CITY OF GARDEN GROVE
CITY OF SANTA ANA
OC Streetcar
EASEMENT FOR
76 GAS STATION
2017-06-15

EXHIBIT L-3

NOVA ACADEMY TEMPORARY CONSTRUCTION EASEMENT

TEMPORARY CONSTRUCTION EASEMENT

ATTACHMENT TO LEGAL DESCRIPTION

Assessor Parcel No.: 398-221-19

This temporary construction easement shall be in, on, over, under, and across that certain real property described in Exhibit "A1" and depicted in Exhibit "A2" attached hereto, subject to the rights and limitations set forth herein ("TCE"). The TCE shall be used by the Orange County Transportation Authority and its employees, agents, representatives, contractors, successors and assigns (collectively, "OCTA" in connection with the construction of the OC Streetcar ("Project"). The TCE shall be for a period of thirty-six (36) months. Specifically, the actual physical construction activities within the TCE area shall be limited to the summer recess period, from the end of the 2018-2019 school year to the beginning of the 2019-2020 school year, within the thirty-six (36) month TCE period (the "Construction Period"). During the Construction Period, OCTA's use and occupancy of the TCE will be exclusive, subject to the rights and limitations set forth below. OCTA's use and occupancy of the TCE during the remaining thirty-four (34) months of the TCE period will be non-exclusive.

Rights and Limitations of Use and Occupancy of TCE:

- OCTA shall provide the owner(s) and occupant(s) of the property subject to this TCE a minimum of thirty (30)-days written notice as to when the Construction Period will commence.
- OCTA agrees to the Construction Period beginning no sooner than the end of 2018-2019 school year and ending no later than the beginning of the 2019-2020 school year (aka summer recess).
- During the Construction Period, OCTA may place a temporary fence around the TCE area, provided however, no fence will be placed around or across no more than one-half of the walkway or pathway to any entrance to the building.
- Reasonable pedestrian access to the property shall be maintained at all times (*reference cut-sheet to be utilized for appraisal purposes).*
- Access to the TCE area shall be from the public right of way.
- Except as to those improvements identified below as being protected in place, improvements within the TCE area will be removed as needed by OCTA to allow for construction activities. All improvements so removed shall be included in the compensation paid by OCTA for this TCE.
- The following improvements within the TCE area will be protected in place:
  - Steps and railings
  - Concrete banding immediately adjacent to building
  - Raised concrete planter
  - Four (4) trees
  - Fixed bike and skateboard racks

- The following improvements within the TCE area will be replaced in kind by OCTA:

  - Pavers as selected by the City and OCTA to be consistent with the proposed improvements within Sasscer Park
  - Tree wells or planter areas around existing trees

- Drainage patterns and/or systems will be maintained during construction and restored to pre-existing conditions

- Prior to the termination of the Construction Period, OCTA will remove from the TCE area all construction equipment and materials including, without limitation, any temporary fence, any temporary improvements, and all construction-related debris. The TCE area will be restored to a condition that is as functionally equivalent as is practicable to its condition prior to commencement of the construction activities, as indicated above, unless otherwise agreed to in writing between OCTA and owner.

OCTA expressly reserves the right to convey, transfer, or assign the TCE subject to the same rights and limitations described herein.

PSOMAS

EXHIBIT 'A'

LEGAL DESCRIPTION

TEMPORARY CONSTRUCTION EASEMENT

In the City of Santa Ana, County of Orange, State of California, being those portions of Lots 1 and 2, Block '1,' of the Jacob Ross Tract, recorded in Book 5, Pages 532 of Miscellaneous Records of Los Angeles County, California described as follows:

Beginning at the northeasterly corner of said Lot 1; thence along the northerly line of said Lots 1 and 2 North 89°23'43" West 126.35 feet; thence South 00°36'17" West 0.37 feet to the beginning of a non-tangent curve concave southwesterly having a radius of 115.00 feet, a radial line to said beginning bears North 03°52'39" East; thence southeasterly along said curve 83.19 feet through a central angle of 41°29'43" to a radial line of said curve which bears North 45°22'22" East; thence on the prolongation of said radial 11.14 feet to the beginning of a non-tangent curve concave southwesterly having a radius of 150.00 feet, a radial line to said beginning bears North 49°04'30" East; thence southerly along said curve 53.96 feet through a central angle of 20°36'37"; thence South 89°56'42" East 16.95 feet to the said easterly line of Lot 1; thence along said easterly line North 00°03'18" East 71.36 feet to the **Point of Beginning.**

Excepting therefrom the easterly 15.00 feet of said Lot 1.

Containing 2,466 sq. ft.

All as shown on Exhibit "B" attached hereto and made a part thereof.

PSOMAS

This legal description is not intended to be used in the conveyance of land in violation of the Subdivision Map Act of the State of California.

This legal description was prepared by me or under my direction.

Jeremy L. Evans, PLS 5282 — Date: 2.9.2017

EXHIBIT "B"

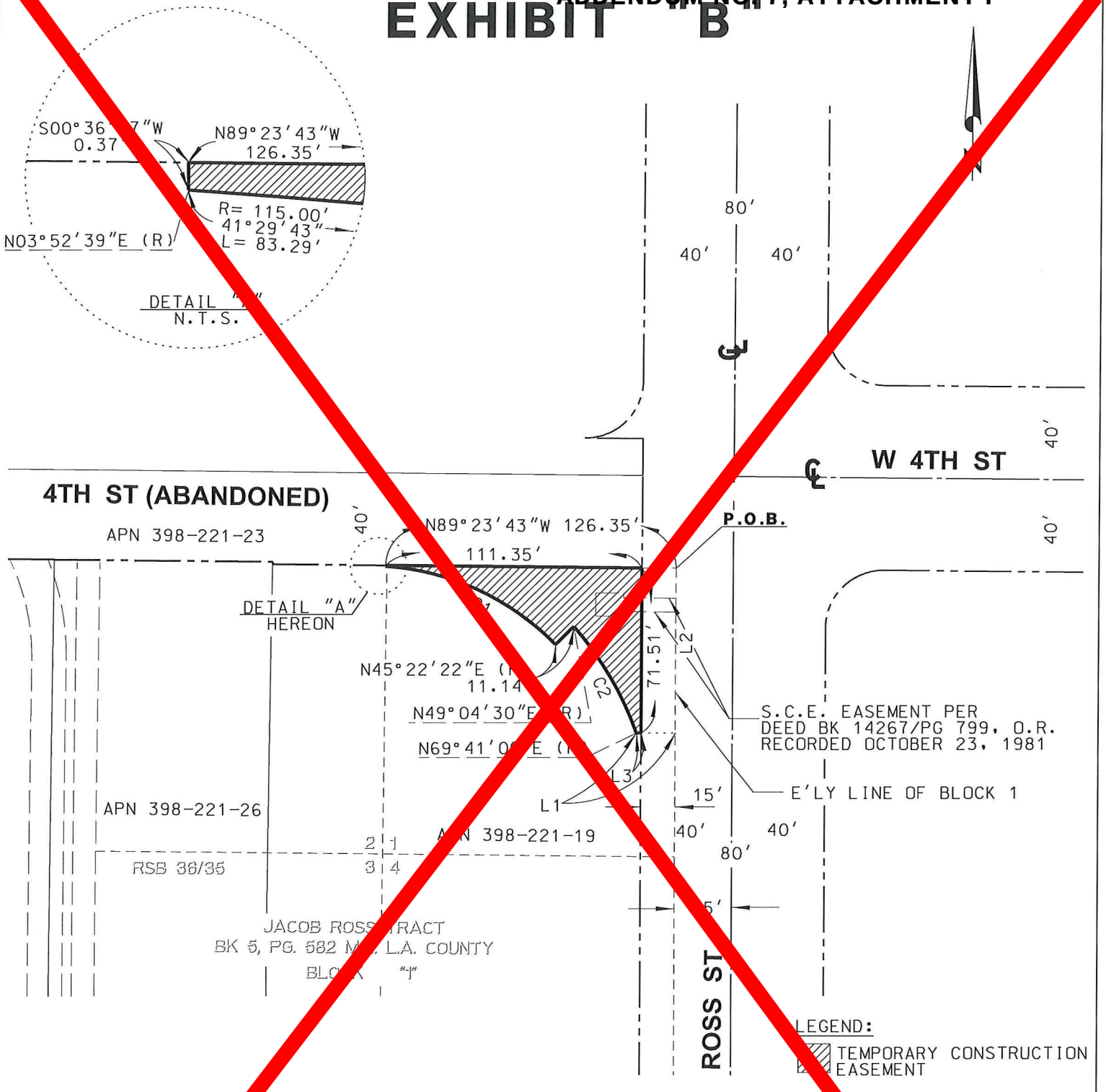

CURVE DATA:

	RADIUS	ANGLE	LENGTH
C1	115.00'	41°29'43"	83.29'
C2	150.00'	20°36'37"	53.96'

LINE DATA:

	BEARING	DISTANCE
L1	S89°56'42"E	16.95'
L2	N00°03'18"E	71.36'
L3	S89°56'42"E	1.95'

0' 30' 60' 120' 180'

SCALE 1" = 60'

PSOMAS
3 Hutton Centre Dr, Suite 200
Santa Ana, California 92707
714/751-7373

SHEET OF 1

SCALE 1" = 60'

DRAFTED NPG

CHECKED JLE

DATE 02/09/2017

JOB NUMBER 2HNT010400

DESCRIPTION:
TEMPORARY CONSTRUCTION EASEMENT OVER PARCELS 1 AND 2, JACOB ROSS TR
MRLA 5/582; CITY OF SANTA ANA
APN 398-221-19

FILE PATH