INVITATION FOR BIDS (IFB) 4-2550
BOOK 1 OF 2

REPLACEMENT OF MECHANICAL UNITS AT THE SANTA ANA BUS BASE

ORANGE COUNTY TRANSPORTATION AUTHORITY
550 South Main Street
P.O. Box 14184
Orange, CA 92863-1584
(714) 560-6282

Key IFB Dates

Issue Date:	**November 26, 2024**
Pre-Bid Conference/Site Visit:	**December 5, 2024**
Questions/Approved Equal Submittal:	**December 20, 2024**
Bid Submittal Date:	**February 3, 2025**

TABLE OF CONTENTS

SECTION I: INSTRUCTIONS TO BIDDERS 1

SECTION II: INSTRUCTIONS TO BIDDING FORMS 13

SECTION III: ADDITIONAL CONTRACTUAL EXHIBITS 31

SECTION IV: AGREEMENT 39

SECTION V: GENERAL PROVISIONS - EXHIBIT A 40

SECTION VI: PROJECT SPECIFICATIONS - EXHIBIT B 71

SECTION VII: LIST OF DRAWINGS - EXHIBIT C 72

SECTION VIII: LEVEL 3 HEALTH, SAFETY AND ENVIRONMENTAL SPECIFICATIONS – EXHIBIT H 74

BID BOOKLET 96

November 26, 2024

SUBJECT: NOTICE INVITING SEALED BIDS
IFB 4-2550, "REPLACEMENT OF MECHANICAL UNITS AT THE SANTA ANA BUS BASE"

TO: ALL BIDDERS

FROM: ORANGE COUNTY TRANSPORTATION AUTHORITY

The Orange County Transportation Authority (Authority) invites sealed bids for **REPLACEMENT OF MECHANICAL UNITS AT THE SANTA ANA BUS BASE**

The work under this contract consists of replacement of mechanical equipment units including heating, ventilation, and air conditioning (HVAC) units, heating and ventilation (HV) make-up air units, exhaust fans (EF), cyclone vacuum (CV) units and any and all related work on the project located at Santa Ana Bus Base 4301 West MacArthur Boulevard, Santa Ana, CA 92704.

The estimated cost for this project is $7,000,000.00. Bidders will be required to hold a valid State of California license as specified below:

- Hold a valid State of California C-20 specialty contractor license, or
- Hold a valid State of California Class B general building contractor and either:
  - hold a valid State of California C-20 specialty contractor license, or
  - subcontract to a valid State of California C-20 specialty licensed subcontractor.

Please note that by submitting a Bid, Bidder certifies that it is not subject to any Ukraine/Russia-related economic sanctions imposed by the State of California or the United States Government including, but not limited to, Presidential Executive Order Nos. 13660, 13661, 13662, 13685, and 14065. Any individual or entity that is the subject of any Ukraine/Russia-related economic sanction is not eligible to submit a Bid. In submitting a Bid, all Bidders agree to comply with all economic sanctions imposed by the State or U.S. Government.

Bids must be submitted at or before 11:00 a.m., February 3, 2025.

Bids delivered in person or by a means other than the U.S. Postal Service shall be submitted to the following:

Orange County Transportation Authority
Contracts Administration and Materials Management
600 South Main Street, (Lobby Receptionist)
Orange, California 92868
Attention: Josie Mellen, Sr. Contract Administrator

Or bids delivered using the U.S. Postal Service shall be addressed as follows:

Orange County Transportation Authority
Contracts Administration and Materials Management
550 South Main Street
P.O. Box 14184
Orange, California 92863-1584
Attention: Josie Mellen, Sr. Contract Administrator

Bids and amendments to bids received after the date and time specified above will be returned to the bidders unopened.

Bidders interested in obtaining a copy of this Invitation for Bids (IFB) may do so by downloading the IFB from CAMM NET the Authority's on-line website at https://cammnet.octa.net.

All bidders and subcontractors interested in doing business with the Authority are required to register their business on-line at CAMM NET. The website can be found at https://cammnet.octa.net. From the site menu, click on CAMM NET to register.

To receive all further information regarding this IFB, bidders and sub-contractors must be registered on CAMM NET with at least one of the following commodity codes for this solicitation selected as part of the vendor's on-line registration profile:

Category:	Commodity:
Construction	General Contractor
	Construction - Electrical Installation
	Construction (General)
	Electrical Contractor
	Roofing Contractor

Facility; Equipment, Supplies	Plumbing HVAC (Heating, Ventilation & Air Conditioning) Contractor HVAC - Building - Equipment Electrical Supplies

An on-site/in-person pre-bid conference will be held on December 5, 2024, at 10:00 a.m. at the Authority's Administrative Office, 550 South Main Street, Orange, CA 92868 in Conference Room 08.

Participation via teleconference will also be available. Prospective bidders may join or call-in using the following credentials:

- **Microsoft Teams Meeting Link**
- OR Call-in Number:1 916-550-9867,137680369#
- Conference ID: 137 680 369#

A copy of the pre-bid conference presentation slides and registration sheet(s) will be issued via addendum prior to the date of the pre-bid conference.

Immediately following the pre-bid conference, a job walk will be conducted at 11:30 a.m. at Santa Ana Bus Base, 4301 West MacArthur Boulevard, Santa Ana, California 92704.

All prospective bidders are encouraged to attend the pre-bid conference, and the job walk.

Please review "Bus Base Visit Protocol" following this notice.

Bidders will be required to submit the name, business address, and California contractor license number of each subcontractor who will perform work or labor or render service to the bidder in or about the work in an amount in excess of one-half of one percent (1/2 of 1 %) of the bidder's total bid. If a subcontractor's California contractor license number is submitted incorrectly, it will not be grounds for filing a bid protest or grounds for considering the bid nonresponsive if the corrected subcontractor's California contractor license number is submitted to the Authority within 24 hours after the bid opening.

All bidders are encouraged to subcontract with small businesses to the maximum extent possible.

The successful Bidder will be required to comply with all applicable equal opportunity laws and regulations.

All bidders must register with the Department of Industrial Relations pursuant to Labor Code Section 1725.5. A bidder is exempt from this requirement pursuant to Labor Code Section 1771.1(a) if the bidder submits a bid authorized by Section 7029.1 of the Business and Professions Code or by Section 10164 or 20103.5 of the Public Contract Code, provided the bidder is registered to perform public work pursuant to Section 1725.5 at the time the contract is awarded.

A bid submitted by a contractor or subcontractor will not be accepted or entered into without proof of the contractor or subcontractor's current registration to perform public work pursuant to Labor Code Section 1725.5.

Award of this contract is subject to receipt of federal, state and/or local funds adequate to carry out the provisions of the agreement including the project specification.

Bus Base Visit Protocol

OCTA has a core value of Safety for all employees, visitors, and the public for all transit related operations, therefore Bus Base Rules are established to prevent incidents and injury.

OCTA Maintenance bases require proper personal protective equipment (PPE) while at the bus base maintenance areas.
Basic PPE includes;

1. ANSI Class 2 Reflective Vest
2. Proper clothing foot ware (i.e., no open toe shoes, sandals, high heel shoes, etc.)
3. Proper eye protection as required

All Contractors (proposed bidders, visitors, etc.) upon arrival shall report into the base Maintenance Shift Supervisor, with the appropriate OCTA employee escort.

Each person shall:

1. Sign in
2. Obtain a briefing of potential hazards and emergency procedures
3. Cell Phones are only allowed inside a building

All job walk visitors shall stay within the group and be attentive to instructions for a safe visit.

Upon completion of the visit each person shall sign out with the Maintenance Shift Supervisor prior to leaving the property.

SECTION I: INSTRUCTIONS TO BIDDERS

SECTION I. INSTRUCTIONS TO BIDDERS

A. PRE-BID CONFERENCE/SITE VISIT

An on-site/in-person pre-bid conference will be held on December 5, 2024, at 10:00 a.m. at the Authority's Administrative Office, 550 South Main Street, Orange, CA 92868 in Conference Room 08.

Participation via teleconference will also be available. Prospective bidders may join or call-in using the following credentials:

Microsoft Teams Meeting Link
OR Call-in Number: 1-916-220-9867
Conference ID: 137 680 369#

A copy of the pre-bid conference presentation slides and registration sheet(s) will be issued via addendum prior to the date of the pre-bid conference.

Immediately following the pre-bid conference, a job walk will be conducted at 11:30 a.m., at 4301 West MacArthur Boulevard, Santa Ana, California 92704. All prospective bidders are strongly encouraged to attend the pre-bid conference and the site visit.

By investigation of the work site, bidder shall be satisfied as to the nature and location of the work and shall be fully informed as to the conditions and matters, which can in any way affect the work or the cost thereof. Prospective bidders should familiarize themselves with Authority safety rules that pedestrians must wear approved safety vests.

Please bring a safety vest for the job walk.

B. EXAMINATION OF DOCUMENTS

By submitting a bid, the bidder represents that it has thoroughly examined and become familiar with the work required under this IFB and that it is capable of performing quality work to achieve the authority's objective.

A Bid Booklet has been furnished as Book 2 of this IFB.

C. ADDENDA

The Authority reserves the right to revise the IFB documents. Such, if any, will be made by written addendum to this IFB. Any written addenda issued pertaining to this IFB shall be incorporated into the terms and conditions of any resulting Agreement. The Authority will not be bound to any modifications to or deviations from the requirements set forth in this IFB as the result of oral instructions. Bidders

shall acknowledge receipt of Addenda in their bids. Failure to acknowledge receipt of Addenda may cause the bid to be deemed non-responsive to this IFB and be rejected.

D. AUTHORITY CONTACT

All communication and/or contacts with Authority staff regarding this IFB are to be directed to the following Contract Administrator:

Josie Mellen, Sr. Contract Administrator
Contracts Administration and Materials Management Department
600 South Main Street
P.O. Box 14184
Orange, CA 92863-1584
Phone: 714.560. 5078, Fax: 888.404.6282
Email: jmellen@octa.net

Commencing on the date of the issuance of this IFB and continuing until award of the contract or cancellation of this IFB, no bidder, subcontractor, lobbyist or agent hired by the proposer shall have any contact or communications regarding this IFB with any Authority's staff; member of the evaluation committee for this IFB; or any contractor or consultant involved with the procurement, other than the Contract Administrator named above or unless expressly permitted by this IFB. Contact includes face-to-face, telephone, electronic mail (e-mail) or formal written communication. Any bidder, subcontractor, lobbyist or agent hired by the bidder that engages in such prohibited communications may result in disqualification of the proposer at the sole discretion of the Authority.

E. CLARIFICATIONS OF SPECIFICATIONS AND APPROVED EQUALS

1. Specifications Review

Should a bidder find discrepancies in, or omissions from, the drawings or specifications, or be in doubt as to their meaning, the bidder shall notify the Authority in writing in accordance with item 3 ("Submitting Requests"), below. Should it be found that the point in question is not clearly and fully set forth; a written addendum clarifying the matter will be sent to all firms registered on CAMM NET under the commodity codes specified in the IFB.

2. Preference for Materials

In accordance with the California Public Contract Code Section 3400, reference to any equipment, material, article or patented process, by trade name, make, or catalog number, shall not be construed as limiting competition. In those cases where the specifications call for a designated material, product, or service by specific brand or trade name and there is only one brand or trade name listed, the item involves a unique or novel

product application required to be used in the public interest or is the only brand or trade name known to the Authority.

Where the specifications or drawings identify any material, product or service by one or more brand names, whether or not “or equal” is added, and the bidder wishes to propose the use of another item as being equal, approval shall be requested as set forth in below.

3. Submitting Requests

a. All requests for approved equals, clarification of specifications, or questions must be put in writing and must be received by the Authority no later than 5:00 p.m., on December 20, 2024.

b. Requests for approved equals, clarifications, questions must be clearly labeled, "Written Questions". The Authority is not responsible for failure to respond to a request that has not been labeled as such.

c. Any of the following methods of delivering written questions are acceptable as long as the questions are received no later than the date and time specified above:

1. U.S. Mail: Orange County Transportation Authority, P.O. Box 14184, Orange, California 92863-1584.

2. Courier/Overnight: Orange County Transportation Authority, 600 South Main Street, Lobby Receptionist, Orange, California 92868

3. Facsimile: (888) 404-6282.

4. E-Mail: jmellen@octa.net

d. Any request for an approved equal or clarification of the specifications must be fully supported with technical data, test results, or other pertinent information as evidence that the substitute offered is equal to or better than the specification requirements. The burden of proof as to the equality, substitutability, and the compatibility of proposed alternates or equals shall be upon the bidder, who shall furnish all necessary information at no cost to the Authority. The Authority shall be the sole judge as to the equality, substitutability and compatibility of the proposed alternatives or equals.

4. Authority Responses

Responses from the Authority will be posted on CAMM NET, no later than five (5) calendar days before the scheduled date of bid opening. Bidders

may download responses from CAMM NET at *https://cammnet.octa.net*, or request responses may be sent via U.S. Mail by e-mailing or faxing the request to Josie Mellen, Sr. Contract Administrator.

To receive e-mail notification of Authority responses when they are posted on CAMM NET, bidders and their subcontractors must be registered on CAMM NET with at least one of the following commodity codes for this solicitation selected as part of the vendor's on-line registration profile:

Category:	Commodity:
Construction	General Contractor
	Construction - Electrical Installation
	Construction (General)
	Electrical Contractor
	Roofing Contractor
	Plumbing
	HVAC (Heating, Ventilation & Air Conditioning) Contractor
Facility; Equipment, Supplies	HVAC - Building - Equipment
	Electrical Supplies

Inquiries received after 5:00 p.m. on December 20, 2024, will not be responded to.

F. SUBMISSION OF BIDS

1. Date and Time

Bids must be submitted at or before 11:00 a.m., February 3, 2025.

Bids received after the time due will be rejected without consideration or evaluation.

Bids will be publicly opened in the Authority's Administration Office, 600 South Main Street, Orange, California 92863, Conference Room 101 at the submission time indicated above. Participation via teleconference will also be available. Bidders may join or call-in using the following credentials:

- **Microsoft Teams Meeting Link**
- OR Call-in Number: 1-916-550-9867
- Conference ID: 749 319 03#

2. Address

Bids delivered in person or by a means other than the U.S. Postal Service shall be submitted to the following:

Orange County Transportation Authority
Contracts Administration and Materials Management (CAMM)
600 South Main Street, (Lobby Receptionist)
Orange, California 92868
Attention: Josie Mellen, Sr. Contract Administrator

Or bids delivered using the U.S. Postal Services shall be addressed as follows:

Orange County Transportation Authority
Contracts Administration and Materials Management (CAMM)
P.O. Box 14184
Orange, California 92863-1584
Attention: Josie Mellen, Sr. Contract Administrator

3. Bid Booklet and Identification of Bids

Bids must be submitted on the forms provided in the Bid Booklet (Book 2 of 2) that accompanies this IFB. Bids shall include properly completed bidding forms. The bid forms must be enclosed in a sealed package clearly marked as follows:

IFB 4-2550, "REPLACEMENT OF MECHANICAL UNITS AT THE SANTA ANA BUS BASE"

Bidder shall be entirely responsible for any consequences, including disqualification of the bid, resulting from any inadvertent opening of unsealed or improperly identified packages. It is the bidder's sole responsibility to see that its bid is received as required.

G. PRE-CONTRACTUAL EXPENSES

The Authority shall not, in any event, be liable for any pre-contractual expenses incurred by bidder in the preparation of its bid. Bidder shall not include any such expenses as part of its bid.

Pre-contractual expenses are defined as expenses incurred by bidder in:

1. Preparing a bid in response to this IFB;
2. Submitting that bid to the Authority;
3. Negotiating with the Authority any matter related to this bid; and

4. Any other expenses incurred by bidder prior to date of award, if any, of the Agreement.

H. JOINT BIDS

Where two or more firms desire to submit a single bid in response to this IFB, they should do so on a prime-subcontractor basis rather than as a joint venture. The Authority intends to contract with a single firm and not with multiple firms doing business as a joint venture.

I. TAXES

Bids are subject to State and Local sales taxes. However, the Authority is exempt from the payment of Federal Excise and Transportation Taxes. Contractor is responsible for payment of all taxes for any goods, services, processes, and operations incidental to or involved in the contract.

J. BID SECURITY FORMS

Bids shall be accompanied by a certified or cashier's check, or an acceptable bid bond for an amount not less than ten percent (10%) of the bid, made payable to the order of the Orange County Transportation Authority. A corporate surety (not an individual surety), registered in the state of California and registered to do business in the county of Orange must issue bid bonds. Said check or bond shall be given as a guarantee that the bidder will enter into a contract if awarded the work and in case of refusal or failure to enter into said contract, the check or bond, as the case may be, shall be forfeited to the Authority.

K. WITHDRAWAL OF BIDS

Bidders may withdraw its bid at any time prior to the time set for opening of bids by means of written request signed by the bidder or its proper authorized representative. Such written request shall be delivered to the Contracts Administrator at the address noted in the cover notice of this IFB.

L. PREVAILING WAGES

This project is funded under a financial assistance contract by the U.S. Department of Transportation and is subject to all conditions of the Davis-Bacon Act (40 U.S.C. 3141–48), as supplemented by the Department of Labor regulations 29 CFR part 5, and the Labor Code of the State of California commencing in Section 1770 et. seq. It is required that all mechanics and laborers employed or working at the site be paid not less than the current basic hourly rates of pay and fringe benefits. Wage schedules are available at the Authority's Offices or on the internet at:

http://www.dir.ca.gov/OPRL/statistics_research.html and
http://www.access.gpo.gov/davisbacon/.

Bidders shall utilize the relevant prevailing wage determinations in effect on the first advertisement date of the Notice Inviting Sealed Bids. In the event there are any differences between the minimum wage rates as determined by the United States Secretary of Labor and those determined by the State of California, the highest rate must be paid.

This Agreement is subject to compliance monitoring and enforcement by the Department of Industrial Relations. The Department of Industrial Relations shall monitor and enforce compliance with applicable prevailing wage requirements for this Agreement. The reporting requirements may be found at https://www.dir.ca.gov/Public-Works/Contractors.html. Bidder is responsible for complying with all requirements of the Department of Industrial Relations, including filing electronic payroll reports.

A contractor or subcontractor will not be qualified to bid on, be listed in a bid proposal, or engage in the performance of any contract for public work on a public works project unless registered with the Department of Industrial Relations pursuant to Labor Code Section 1725.5. A contractor or subcontractor will be exempt from this requirement pursuant to Labor Code Section 1771.1(a) if it submits a bid authorized by Section 7029.1 of the Business and Professions Code or by Section 10164 or 20103.5 of the Public Contract Code, provided the contractor is registered to perform public work pursuant to Section 1725.5 at the time the contract is awarded.

A contractor or subcontractor will not be awarded a contract for public work on a public works project unless registered with the Department of Industrial Relations pursuant to Labor Code Section 1725.5.

A bid submitted by a contractor or subcontractor will not be accepted or entered into without proof of the contractor or subcontractor's current registration to perform public work pursuant to Labor Code Section 1725.5.

M. SUBCONTRACTORS AND ASSIGNMENTS

The successful bidder shall perform work equivalent to **at least ten percent (10%) of the total amount of the construction work** at the site; and, perform the work on the site with its own staff.

Pursuant to the provisions of the California Public Contract Code Section 4104, every bidder shall in the bid set forth:

1. The name, business address, and California contractor license number of each subcontractor who will perform work or labor or render service to the bidder in or about the work in an amount in excess of one-half of one percent (1/2 of 1 %) of the bidder's total bid; and

2. The portion of the work that will be done by each subcontractor. The bidder shall list only one subcontractor for each portion of work as defined by the bidder in its bid.

3. The dollar amount of the work, which will be done by each such subcontractor.

Bidder shall complete Exhibit D "List of Subcontractors" with the above requested information.

If a subcontractor's California contractor license number is submitted incorrectly in the bid, it will not be grounds for filing a bid protest or grounds for considering the bid nonresponsive if the corrected subcontractor's California contractor license number is submitted to the Authority within 24 hours after the bid opening.

If the bidder fails to specify a subcontractor for any portion of the work to be performed under the contract in excess of one-half of one percent (1/2 of 1 %) of the bidder's total bid, or if the bidder specifies more than one (1) subcontractor for the same portion of the work to be performed under the contract in excess of one-half of one percent (1/2 of 1 %) of the bidder's total bid, the bidder agrees to perform that portion. **The successful bidder shall not, without the express written consent of the Authority, either:**

1. Substitute any person, firm, or corporation as subcontractor in place of the subcontractor designed in the original bid; or

2. Permit any subcontract to be assigned or transferred; or

3. Allow it to be performed by anyone other than the original subcontractor listed in the bid.

Each Bidder shall set forth in its bid the name and location of the place of business address of each subcontractor who will perform work or labor or render service to the prime contractor in connection with the performance of the contract.

Bidder shall not assign any interest it may have in any Agreement with the Authority, nor shall bidder assign any portion of the work under any such Agreement with a value in excess of one-half of one percent (1/2 of 1%) of Agreement price to be sub-contracted to any one other than these subcontractors listed in Exhibit D in the "List of Subcontractors," except by prior written consent of Authority. Authority's consent to any assignment shall not be deemed to relieve bidder of its obligations to fully comply with its obligations under its Agreement with the Authority. Bidder with its own forces shall perform minimum of ten percent (10%) calculated as a percentage of the total cost of the project under this Agreement. Bidder shall also include in its subcontract agreements the provisions of its Agreement with Authority including the stipulation that each subcontractor shall maintain adequate insurance coverage compatible to the insurance coverage required of the bidder.

N. BIDDER'S LICENSING REQUIREMENTS

In conformance with the current statutory requirements of Section 7028.15 of the Business and Professions Code of the State of California, regarding submission of a bid without a license, the bidder shall provide as part of the bid a valid State of California license number, class or type and date of expiration.

Furthermore, the bidder shall ensure that all subcontractors fully comply with the appropriate licensing requirements. The bidder shall also certify that all information provided and representations made in the bid are true and correct, and made under penalty of perjury. Bidders shall provide this information on Exhibit D, "List of Subcontractors" presented in the IFB. Failure to provide the information on the certification form or elsewhere as part of the bid shall render the bidder nonresponsive to this solicitation and will result in the rejection of the bid.

O. PERMITS AND INSPECTION COSTS

Successful bidder shall procure all permits and licenses; pay all charges, assessments and fees, as may be required by the ordinances and regulations of the public agencies having jurisdiction over the areas in which the work is located, and shall comply with all the terms and conditions thereof and with all lawful orders and regulations of each such public agency relating to construction operations under the jurisdiction of such agency.

P. LIQUIDATED DAMAGES

In the event bidder, after entering into an Agreement with the Authority, fails to complete the work within the time specified in the Agreement, the bidder will be required to pay the Authority the amount of **$300.00 per calendar day** of delay as agreed to liquidated damages.

Q. PROTEST PROCEDURES

The Authority has on file a set of written protest procedures applicable to this solicitation that may be obtained by contacting the Contract Administrator responsible for this procurement. Any protest filed by a bidder in connection with this IFB must be submitted in accordance with the Authority's written procedures.

R. CONTRACT AWARD

Any contract awarded as a result of this IFB, will be awarded to the lowest responsive and responsible bidder and shall be on a lump sum basis, in accordance with the requirements of this IFB. The contract to be awarded is the Agreement presented in Section VI of this IFB.

S. EXECUTION OF CONTRACT

The successful bidder shall submit to the Authority the required contract bonds, “Guaranty” and acceptable insurance certificates within ten (10) calendar days after notification of contract award from the Authority. Failure to sign the contract and submit applicable bonds, “Guaranty”, and acceptable insurance certificates within the specified time shall be cause to cancel the award and the forfeiture of the Bid Bond. Transfers of contract, or of interest in contracts, are prohibited.

T. AUTHORITY’S RIGHTS

1. The Authority reserves the right to accept or reject any and all bids, or any item or part thereof, or to waive any informalities or irregularities in bids.

2. The Authority reserves the right to withdraw or cancel this IFB at any time without prior notice. The Authority makes no representations that any contract will be awarded to any bidder responding to this IFB.

3. The Authority reserves the right to issue a new IFB for the project.

4. The Authority reserves the right to postpone the bid opening for its own convenience.

5. Each bid will be received with the understanding that acceptance by the Authority of the bid to provide the goods and services described herein shall constitute a contract between the bidder and Authority which shall bind the bidder on its part to furnish and deliver at the prices given and in accordance with conditions of said accepted bid and specifications.

6. The Authority reserves the right to investigate the qualifications of any bidder, and/or require additional evidence of qualifications to perform the work.

7. Submitted IFBs are not to be copyrighted.

U. PUBLIC RECORDS AND INFORMATION

Bids received by Authority are considered public information and will be made available to the public if requested to do so.

V. CONFLICT OF INTEREST

All bidders responding to this IFB must avoid organizational conflicts of interest, which would restrict full and open competition in this procurement. An organizational conflict of interest means that due to other activities, relationships or contracts, a bidder is unable, or potentially unable to render impartial assistance or advice to the Authority; a bidder’s objectivity in performing the work identified in the Project Specifications is or might be otherwise impaired; or a bidder has an

unfair competitive advantage. Conflict of Interest issues must be fully disclosed in the bidder's bid.

W. CODE OF CONDUCT

Bidders agree to comply with the Authority's Code of Conduct as it relates to Third-Party contracts, which is hereby referenced and by this reference is incorporated herein. Bidders agree to include these requirements in all of its subcontracts.

X. SAFETY

The complete safety requirements for this IFB are included in Section IV: Agreement Exhibit H. The Contractor will be required to demonstrate compliance with all requirements of the Safety Specifications after Notice to Proceed but prior to mobilization. These requirements include, but are not limited to, an onsite Health Safety and Environmental (HSE) representative to be present at all times during construction. The representative must have a current Board of Certified Safety Professionals (BCSP) certification and a minimum of five years of experience enforcing HSE compliance. BCSP certification requirements may be found at: https://www.bcsp.org/Safety-Certifications .

SECTION II: INSTRUCTIONS TO BIDDING FORMS

SECTION II. INSTRUCTIONS TO BIDDING FORMS

The Bidder shall complete all the forms identified below, and contained in the Bid Booklet Book 2 of this IFB. The bid may not contain exceptions to or deviations from the requirements of this IFB.

A. BID FORM

The bidder must complete the Bid Form which must be submitted in its entirety. Failure to submit the Bid Form in its entirety will result in the bid being non-responsive. In addition to providing the lump sum bid, the bidder affirms the Bid Form statements.

B. BID SECURITY FORM - BID BOND

The bidder shall include the Bid Security Form and include the appropriate bid bond or cashier check with the bid.

C. INFORMATION REQUIRED OF BIDDER

Bidder must provide all the information requested in this form.

D. NOTICE OF REQUIREMENT FOR AFFIRMATIVE ACTION TO ENSURE EQUAL EMPLOYMENT OPPORTUNITY (EXECUTIVE ORDER 11246) (NO FORM REQUIRED)

The bidder shall include the Notice of Requirement for Affirmative Action to Ensure Equal Employment Opportunity provides notice to Bidder regarding the "Equal Opportunity Clause" and the "Standard Federal Equal Employment Opportunity Construction Contract Specifications".

E. BIDDER'S CERTIFICATE OF COMPLIANCE - WORKERS' COMPENSATION INSURANCE

In conformance with current statutory requirements of Section 1860, et. seq., of the Labor Code of the State of California, bidder shall execute the bidder's Certificate of Compliance Regarding Workers' Compensation Insurance.

F. BIDDER'S CERTIFICATE OF COMPLIANCE - BUSINESS AND PROFESSIONS CODE SECTION 7028

Bidder shall execute the Bidder's Certificate of Compliance Regarding State of California Business and Professions Code Section 7028.15.

G. LIST OF SUBCONTRACTORS FORM

Bidder shall complete Exhibit D, which lists all subcontractors performing work in excess of one-half of one percent (½ of 1%) of the bid amount per the instructions

set forth in Section I "Instructions to Bidders".

H. STATUS OF PAST AND PRESENT CONTRACTS FORM

Bidder is required to complete and sign the form entitled “Status of Past and Present Contracts” provided in this IFB and submit as part of the bid. Bidder shall identify the status of past and present contracts where the firm has either provided services as a prime vendor or a subcontractor during the past five (5) years in which the contract has been the subject of or may be involved in litigation with the contracting authority. This includes, but is not limited to, claims, settlement agreements, arbitrations, administrative proceedings, and investigations arising out of the contract. Bidder shall have an ongoing obligation to update the Authority with any changes to the identified contracts and any new litigation, claims, settlement agreements, arbitrations, administrative proceedings, or investigations that arise subsequent to the submission of the bid.

A separate form must be completed for each identified contract. Each form must be signed by the Bidder confirming that the information provided is true and accurate. Bidder is required to submit one copy of the completed form(s) as part of its bid.

I. CERTIFICATION OF NON-COLLUSION

This form requires the Bidder to certify that the bid is not collusive or a sham. This form is to be signed, dated and is part of the bid package in Book 2 of 2.

J. IRAN CONTRACTING ACT CERTIFICATION

This form requires the Bidder to certify that the Bidder is not engaged in specified investment activities in the energy sector of Iran. (Required if the bid is equal to or greater than $1,000,000).

OCTA

BID FORM

The undersigned hereby proposes to perform all work for which a contract may be awarded and to furnish any and all plant, labor, services, material, tools, equipment, supplies, transportation, utilities, and all other items and facilities necessary therefore as required in the **IFB 4-2550**, **"REPLACEMENT OF MECHANICAL UNITS AT THE SANTA ANA BUS BASE"**, and to do everything required therein; and further proposes that, if this bid is accepted, will contract in the form and manner stipulated to perform all the work in strict conformity therewith within the time limits set forth therein, and will accept as full payment therefore, the following price:

Description	**Total Lump Sum Bid Amount**
_____	$ _____

A cashier's check/certified check/bid bond (circle applicable term) properly made payable to Orange County Transportation Authority, hereinafter designated as the Owner, for the sum of _____ Dollars ($ _____) which amount is not less than ten percent (10%) of the total amount of this bid, is attached hereto and is given as a guarantee that the undersigned will execute the Agreement and furnish the required bonds, "Guaranty" and "Certificate of Insurance", if awarded the contract, and in case of failure to do so within the time provided, (a) the proceeds of said check shall be forfeited to the Authority; or (b) surety's liability to the Authority for forfeiture of the face amount of the bond shall be considered as established [circle (a) or (b)].

The undersigned hereby represents that:

BID FORM, PAGE 2

1. Bidder has thoroughly examined and become familiar with the work required and documents included under this IFB. The bidder understands that the award of the contract, if it is awarded, will be based on the lowest total bid submitted by a responsive and responsible bidder, and further, that the amounts and the total on the Bid Form will be subject to verification by the Authority.

2. By investigation at the site of the work and otherwise, it is satisfied as to the nature and location of the work and is fully informed as to all conditions and matters, which can in any way affect the work or the cost thereof.

3. Bidder fully understands the scope of the work/specifications and has checked carefully all words and figures inserted in said Invitation For Bids (IFB) and further understands that the Authority will in no way be responsible for any errors or omissions in the preparation of this bid. Bidder further asserts that it is capable of performing quality work to meet Authority's requirements.

4. Bidder will execute the Agreement and furnish the required Performance and Payment Bonds, Guaranty and proof of insurance coverage within ten (10) calendar days after notice of acceptance of bid by the Authority; and further, that this bid may not be withdrawn for a period of 120 calendar days after the date set for the opening thereof, unless otherwise required by law. If any bidder shall withdraw its bid within said period, the bidder shall be liable under the provisions of the Bid Security, or the bidder and the surety shall be liable under the Bid Bond, as the case may be.

5. Bidder hereby certifies that this bid is genuine and not a sham or collusive or made in the interest or on behalf of any person not herein named, and the undersigned has not directly or indirectly induced or solicited any other bidder to put in a sham bid, or any other person, firm, or corporation to refrain from bidding; the undersigned has not in any manner sought by collusion to secure for himself an advantage over any other bidder.

6. In conformance with current statutory requirements of Section 1860, et. seq., of the Labor Code of the State of California, the Bidder shall execute the document included in this IFB entitled "Bidder's Certificate of Compliance Regarding Workers' Compensation Insurance."

7. Bidder hereby further certifies that each, and every representation made in this bid are true and correct and made under penalty of perjury.

BID FORM, PAGE 3

8. Bidder shall permit the authorized representative of the Authority to inspect and audit all data and records of bidder relating to this bid, and if awarded a contract resulting from this bid, shall permit such inspection and audit of all data and records of bidder related to bidder's performance of such contract.

9. Bidder does not employ anyone who is now, or for one (1) year immediately prior to the date of this offer was, a director, officer, member, or employee of the Orange County Transportation Authority. The undersigned has not agreed to pay a fee contingent upon the award of a contract resulting from this bid to anyone who is now, or for one (1) year immediately prior to the date of this bid was, a director, officer, member, or employee of the Orange County Transportation Authority. No member of or delegate to the Congress of the United States shall be admitted to any share of the contract or to any benefit arising therefrom.

10. If awarded a contract resulting from this bid, bidder shall not discriminate against any employee or applicant for employment because of race, religion, color, sex, age or national origin. The bidder shall take affirmative action to ensure that applicants are employed, and that employees are treated during their employment, without regard to their race, religion, color, sex, age or national origin. Such actions shall include, but not be limited to the following: employment, upgrading, demotion, or transfer; recruitment or recruitment advertising; layoff or termination; rates of pay or other forms of compensation; and selection for training, including apprenticeship.

11. Bid will be in effect for 120 calendar days after the bid closing date.

BID FORM, PAGE 4

Now: In compliance with the **Invitation For Bids 4-2550**, **"REPLACEMENT OF MECHANICAL UNITS AT THE SANTA ANA BUS BASE"**, the undersigned, with full cognizance thereof, hereby proposes to perform the entire work in strict compliance with all of the said requirements and provisions for the prices set forth herein upon which award of contract is made. The undersigned affirms that the information provided herein is true and accurate and that any misrepresentations are made under penalty of perjury.

Dated _____ , 202_ Bidder _____

The above bid includes Signature _____

Addenda Nos. _____ Name _____

Title _____

Bidder's Authorized Representative _____

Title _____

Telephone # _____

Fax # _____

Email Address _____

Bidders post office address _____

_____

_____

Corporation organized under the laws of the State of _____

Contractor's License No. _____

Expiration Date of License _____

Surety or sureties _____

_____

(CORPORATE SEAL)

BID SECURITY FORM
BID BOND

KNOW ALL MEN BY THESE PRESENTS:

That, _____ as principal and Bidder and _____ as Surety, are held and firmly bound unto the Orange County Transportation Authority, of State of California, hereinafter referred to as "Authority," in the sum of _____ Dollars ($_____), to be paid to the Authority, its successors, and assigns; for which payment, well and truly to be made, bind themselves, their heirs, executors, administrators, successors, and assigns, jointly and severally, firmly by these presents, this amount being ten percent (10%) of the total amount of the Bid.

THE CONDITION OF THIS OBLIGATION IS SUCH, that if the certain bid of the above named bounden principal _____ _____ for_____ at the Orange County Transportation Authority's _____ as specifically set forth in documents entitled **IFB 4-2550**, **"REPLACEMENT OF MECHANICAL UNITS AT THE SANTA ANA BUS BASE"**, shall not be withdrawn within a period of 120 calendar days after the date set for the opening of bids, (unless otherwise required by law, and notwithstanding the award of the contract to another Bidder), and that if said bid is accepted by the Authority through action of its legally constituted contracting authorities and if the above bounden_____ its heirs, executors, administrators, successors and assigns, shall execute a contract for such construction and deliver the required Performance and Payment Bonds, "Guaranty," and proof of insurance coverage within ten (10) calendar days after notification of contract award from the Authority, then this obligation shall become null and void; otherwise it shall be and remain in full force and effect.

IN WITNESS WHEREOF, we hereunto set our hands and seals this _____ day of _____, 202_.

_____
_____

NOTE: The standard printed bond form of any bonding company acceptable to the Authority may be used in lieu of the foregoing approved sample bond form provided the security stipulations protecting the Authority are not in any way reduced by use of the security company's printed standard form.

BID SECURITY FORM
CHECK TO ACCOMPANY BID

(NOTE: The following form shall be used in case check accompanies bid)

Accompanying this bid is a Certified or Cashiers check (circle the appropriate one) payable to the order of Orange County Transportation Authority, hereinafter referred to As "Authority" for_____ dollars ($_____), this amount being ten percent (10%) of the total amount of the Bid submitted in response to **IFB 4-2550, "REPLACEMENT OF MECHANICAL UNITS AT THE SANTA ANA BUS BASE"**. The proceeds of this check shall become the property of Authority provided this bid shall be accepted by Authority through action of its legally constituted contracting authorities and the undersigned shall fail to execute a contract and furnish the required Guaranty Form, Performance and Payment Bonds and proof of insurance coverage within ten (10) calendar days after date of notification of contract award from the Authority. The proceeds of this check shall also become the property of the Authority if the undersigned bidder withdraws the bid within the period of 120 days after the date set for the opening thereof, unless otherwise required by law, and notwithstanding the award of the contract to another bidder. Otherwise, the check shall be returned to the undersigned.

Bidder: _____

Signature: _____

Date: _____

NOTE: If the bidder desires to use a bond instead of check, the Bid Bond form shall be executed and the sum of this bond shall be ten percent [10%] of the total amount of the bid.

INFORMATION REQUIRED OF BIDDER

The bidder is required to supply the following information. Additional sheets may be attached if necessary.

1. Name of Bidder: _____

2. Business Address: _____

3. Telephone ( )_____ Fax ( )_____E-Mail_____

4. Type of Firm - Individual, Partnership or Corporation: _____

5. Corporation organized under the laws of state of: _____

6. Contractor's License No.: Class_____Years of Experience:_____

7. Expiration Date of License: _____

8. Is your firm a certified small business in California? Yes____ No____

9. List the names and addresses of all owners of the firm or names and titles of all officers of the corporation:

_____

_____

INFORMATION REQUIRED OF BIDDER, PAGE 2

10. Please list the following: a) All prior and current license numbers that the current owner(s) or officers possess or have possessed in the last five years and the current status of those license; b) any prior company names that the owner(s) had in operation during the previous five years.

Current Officers or Owners Name	Prior Company Names (During the last 5 years)	Prior and Current License Numbers	Status of License

Note: If additional space is required to detail the information requested, please attach another page. All information requested must be included. Failure to identify all of the information may result in your bid being found non-responsive and your bid being rejected.

11. List all construction projects (public and private) for which Bidder has provided general contractor services for the past three years:

Contract Type (Public or Private)	Project Description	Dates of Service	Total Cost	Name and Address of Owner	Contact Name and Phone Number

Note: If additional space is required to detail the information requested, please attach another page. All information requested must be included. Failure to identify all of the information, may result in your bid being found non-responsive and your bid being rejected.

12. List the name, address and phone number of Superintendent for this project:

_____

13. List all construction projects (public and private) for which Superintendent has provided services as a Superintendent for the past three years.

Contract Type (Public or Private)	Project Description	Dates of Service	Total Cost	Name and Address of Owner	Contact Name and Phone Number

Bidder hereby certifies that it:

_____ is a certified Disadvantaged Business Enterprise as defined herein.

_____ is not a Disadvantaged Business Enterprise as defined herein.

NOTE: If requested by the Authority, bidder shall furnish a certified financial statement, financial data, or other information and references sufficiently comprehensive to permit an appraisal of its current financial condition.

I hereby certify the above is true and correct to the best of my belief.

_____
Signature

_____
Name

_____
Title

_____
Company Name

_____
Telephone Number

_____
Fax Number

_____
Email Address

NOTICE OF REQUIREMENT FOR AFFIRMATIVE ACTION TO ENSURE EQUAL EMPLOYMENT OPPORTUNITY (EXECUTIVE ORDER 11246)

1. The Bidders' attention is called to the "Equal Opportunity Clause" and the "Standard Federal Equal Employment Opportunity Construction Contract Specifications" set forth herein.

2. The goals and timetables for minority and female participation, expressed in percentage terms for the Contractor's aggregate work force in each trade on all construction work in the covered area, are as follows:

   Timetable Goals for Minority Participation for Each Trade (11.9)

   Goals for Female Participation in Each Trade (6.9)

   These goals are applicable to all the Contractor's construction work (whether or not it is federal or federally assisted) performed in the covered area.

   The Contractor's compliance with the Executive Order and the regulations in 41 C.F.R. Part 60-4 shall be based on its implementation of the Equal Opportunity Clause, specific affirmative action obligations required by the specifications set forth in 41 C.F.R. 60-4.3 (a), and its efforts to meet the goals established for the geographical area where the contract resulting from this solicitation is to be performed. The hours of minority and female employment and training must be uniform throughout the length of the contract, and in each trade, and the Contractor shall make a good faith effort to employ minorities and women evenly on each of its projects. The transfer of minority or female employees or trainees from contractor to contractor or from project to project for the sole purpose of meeting the contractor's goals shall be a violation of the contract, the Executive Order and the regulations in 41 C.F.R. Part 60-4. Compliance with the goals will be measured against the total work hours performed.

3. The Contractor shall provide written notification to the Director of the Office of Federal Contract Compliance Programs within ten (10) working days of award of any construction subcontract in excess of $10,000 at any tier for construction work under the contract resulting from this solicitation. The notification shall list the name, address and telephone number of the subcontractor; employer identification number; estimated dollar amount of the subcontract; estimated starting and completion dates of the subcontract; and the geographical area in which the contract is to be performed.

4. As used in this Notice, and in the contract resulting from this solicitation, the "covered area" includes the County of Orange, California.

BIDDER'S CERTIFICATE OF COMPLIANCE REGARDING WORKERS' COMPENSATION INSURANCE

In conformance with current statutory requirements of Section 1860, et. seq., of the Labor Code of the State of California, the undersigned confirms the following certification:

> "I am aware of the provisions of Section 3700 of the Labor Code which require every employer to be insured against liability for Workers' Compensation or to undertake self-insurance in accordance with the provisions of that code and I will comply with such provisions before commencing the performance of the work of this Contract."

Name of Bidder/Contractor:_____

Signature: _____

Title: _____

Date: _____

BIDDER'S CERTIFICATE OF COMPLIANCE
REGARDING
STATE OF CALIFORNIA
BUSINESS AND PROFESSIONS CODE SECTION 7028.15

Contractor License Number: _____

Expiration Date of Contractor's License: _____

Each, every and all of the representations made by Bidder in the attached bid are true and correct.

Name of Bidder/Contractor: _____

Signed: _____

Title: _____

Subscribed to and sworn before me, a Notary Public in and for the State of California, on _____, 202___.

_____
Notary Public

My commission expires on:

_____, 202_
(NOTARY SEAL)

LIST OF SUBCONTRACTORS (EXHIBIT D)

List only the subcontractors, which will perform work or labor or render services to the bidder in excess of one-half of one percent (1/2 of 1%) of the bidder's total bid amount. Do not list alternative subcontractors for the same work. (Use additional sheets if necessary.)

Name & Address Under Which Subcontractor is Licensed	License Number	DIR Registration No.	Specific Description of Work to be Rendered	Small Business Y/N	Type	Dollar Amount
						$
						$
						$
						$
						$
						$
TOTAL VALUE OF SUBCONTRACTED WORK						$

Bidder's Name _____

STATUS OF PAST AND PRESENT CONTRACTS FORM

On the form provided below, Offeror/Bidder shall list the status of past and present contracts where the firm has either provided services as a prime vendor or a subcontractor during the past five (5) years in which the contract has been the subject of or may be involved in litigation with the contracting authority. This includes, but is not limited to, claims, settlement agreements, arbitrations, administrative proceedings, and investigations arising out of the contract.

A separate form must be completed for each contract. Offeror/Bidder shall provide an accurate contact name and telephone number for each contract and indicate the term of the contract and the original contract value. Offeror/Bidder shall also provide a brief summary and the current status of the litigation, claims, settlement agreements, arbitrations, administrative proceedings, or investigations. If the contract was terminated, list the reason for termination.

Offeror/Bidder shall have an ongoing obligation to update the Authority with any changes to the identified contracts and any new litigation, claims, settlement agreements, arbitrations, administrative proceedings, or investigations that arise subsequent to the submission of the bid. Each form must be signed by an officer of the Offeror/Bidder confirming that the information provided is true and accurate.

Project city/agency/other:	
Contact Name:	**Phone:**
Project Award Date:	**Original Contract Value:**
Term of Contract:	
(1) Litigation, claims, settlements, arbitrations, or investigations associated with contract:	
(2) Summary and Status of contract:	
(3) Summary and Status of action identified in (1):	
(4) Reason for termination, if applicable:	

By signing this Form entitled "Status of Past and Present Contracts," I am affirming that all of the information provided is true and accurate.

_____ _____
Name Signature

_____ _____
Title Date

Revised. 03/16/2018

Non-Collusion Affidavit

To the Orange County Transportation Authority

In accordance with Title 23 United States Code Section 112 and Public Contract Code 7106 the bidder declares that the bid is not made in the interest of, or on the behalf of, any undisclosed person, partnership, company, association, organization or corporation; that the bid is genuine and not collusive or sham; that the bidder has not directly or indirectly induced or solicited any other bidder to put in a false or sham bid, or that anyone shall refrain from bidding; that the bidder has not in any manner, directly or indirectly, sought by agreement, communication, or conference with anyone to fix the bid price of the bidder or any other bidder, or to fix any overhead, profit, or cost element of the bid price, or of that of any bidder, or to secure any advantage against the public body awarding the contract of anyone interested in the proposed contract; that all statements contained in the bid are true; and, further, that the bidder has not, directly, or indirectly, submitted his or her bid price or any breakdown thereof, or the contents thereof, or divulged information or data relative thereto, or paid, and will not pay, any fee to any corporation, partnership, company association, organization, bid depository, or to any member or agent thereof to effectuate a collusive or sham bid.

Name of Bidder:_____

Signature: _____

Date:_____

IRAN CONTRACTING ACT CERTIFICATION

(California Public Contract Code Sections 2200, *et seq.*)

The Iran Contracting Act of 2010 (PCC Sections 2200-2208), prohibits bidders who are engaged in investment activities in the energy sector of Iran from bidding on, submitting proposals for, or entering into or renewing contracts with public entities for goods or services of one million dollars ($1,000,000) or more. At the time of submitting a bid, each bidder must certify that the bidder is not identified on the Department of General Services list of ineligible persons pursuant to PCC Section 2203(b). Each bidder is also required to certify that the bidder is not engaged in investment activities in violation of the Iran Contracting Act of 2010.

A bidder who is engaged in investment activities in the energy sector of Iran is defined as:

1. A person providing goods or services of twenty million dollars ($20,000,000) or more in the energy sector of Iran, including a person that provides oil or liquefied natural gas tankers, or products used to construct or maintain pipelines used to transport oil or liquefied natural gas, for the energy sector of Iran; or
2. A person that is a financial institution that extends twenty million dollars ($20,000,000) or more in credit to another person, for 45 days or more, if that person will use the credit to provide goods or services in the energy sector in Iran and is identified on a list created pursuant to PCC Section 2203(b).

A bidder is not required to certify that it is engaged in investment activities in the energy sector of Iran if the bidder is exempt from the certification under PCC Section 2203(c) or (d). If the bidder is exempt from the certification requirement, the bidder will be required to provide documentation demonstrating the exemption.

To comply with the Iran Contracting Act of 2010, the bidder shall complete **one** of the options below. Please note: under PCC Section 2205, false certification of this form may result in civil penalties of $250,000 or twice the amount of the contract for which false certification was made, termination of the contract, and/or ineligibility to bid on contracts for a period of three years.

Option No. 1: Certification

I, the official named below, certify I am duly authorized to execute this certification on behalf of the vendor/financial institution identified below, and the vendor/financial institution identified below, and any subcontractor who will perform work or labor or render services to the vendor identified below, is not on the current Department of General Services list identifying persons engaged in investment activities in the energy sector of Iran, and is not a financial institution extending twenty million dollars ($20,000,000) or more in credit to another person/vendor, for 45 days or more, if that other person/vendor will use the credit to provide goods or services in the energy sector in Iran and is identified on the current Department of General Services list identifying persons engaged in investment activities in the energy sector of Iran.

Vendor/Financial Institution:_____

Signature: _____

Name and Title: _____

Date: _____

Option No. 2: Exemption

Pursuant to PCC Section 2203(c) and (d), a public entity may permit a bidder or financial institution engaged in investment activities in Iran, on a case-by-case basis, to be eligible for, or to bid on, submit proposals for, or enter into or renew a contract with a public entity for goods or services of one million dollars ($1,000,000) or more. If the bidder, financial institution, or any subcontractor who will perform work or labor or render services to the bidder has obtained an exemption from the certification requirement, please complete and sign below and attach the documentation demonstrating the exemption approval.

Vendor/Financial Institution:_____

Signature: _____

Name and Title: _____

Date: _____

Option No. 3: Non-Applicability

Pursuant to PCC Section 2203(b), a bidder or financial institution engaged in investment activities in Iran may not be eligible for, or to bid on, submit proposals for, or enter into or renew a contract with a public entity for goods or services of one million dollars ($1,000,000) or more. If the contract is not for goods or services of one million dollars ($1,000,000) or more, please sign below indicating that the contract is not for goods or services of one million dollars ($1,000,000) or more and thus bidder is not required to certify and does not meet the exemption.

Vendor/Financial Institution:_____

Signature: _____

Name and Title: _____

Date: _____

SECTION III: ADDITIONAL CONTRACTUAL EXHIBITS

SECTION III. ADDITIONAL CONTRACTUAL EXHIBITS

The following Exhibits will be attached to and incorporated into the signed Agreement resulting from this IFB.

A. PERFORMANCE BOND

The successful bidder shall furnish at its own expense a Performance Bond (Exhibit E) satisfactory to the Authority in the amount of one hundred percent (100%) of the full amount of the contract as a guarantee of good faith on behalf of the Contractor that the terms of the contract, including all warranty provisions, shall be complied with in every particular. The bond shall be issued by a corporation surety (not an individual surety) required in the state of California and registered to do business in the county of Orange. The bond shall not be issued from a corporation surety that requires a funds control, funds disbursement, or funds administration company for the issuance of the performance bond.

The bond shall specifically provide that if the Contractor, or its subcontractor, fails to fully perform that the surety or sureties will pay for the same in an amount not exceeding the amount specified in the bond and in case suit is brought against the Authority, that the surety will undertake the defense of same.

B. PAYMENT BOND

The successful bidder shall furnish a Payment Bond (Exhibit F) satisfactory to the Authority in the amount of one hundred percent (100%) of the full amount of the contract. Such bonds shall be in effect during the entire term of the contract and warranty and shall be issued directly by a corporate surety (not an individual surety) registered in the state of California and registered to do business in the county of Orange. The bond shall not be issued from a corporation surety that requires a funds control, funds disbursement, or funds administration company for the issuance of the performance bond.

The bond shall specifically provide that if the Contractor fails to pay for amounts due under the Employment Insurance Act that the surety or sureties will pay for the same in an amount not exceeding the amount specified in the bond and in case suit is brought against the Authority, that the surety will undertake the defense of same.

Pursuant to California Civil Code sections 9550 through 9554, in conjunction with the Bond and Undertaking Law (Code of Civil Procedure sections 995.010, et. seq.), Bidders must provide the following information as part of their payment bond; a certificate of Authority from the Orange County Clerks Office indicating that the insurer has not been surrendered, revoked, canceled, annulled, or suspended or, in the event that it has, that renewed Authority has been granted.

C. GUARANTY

The successful bidder shall also submit to the Authority the executed and notarized Guaranty form (Exhibit G) in this IFB.

All forms must be completed and submitted to the Contract Administrator responsible for this procurement within ten (10) calendar days of award notice by the Authority. Failure to submit the completed and signed forms will result in cancellation of the award.

D. CONTRACT CHANGE ORDER

The Authority's Contract Change Order form (Exhibit I) will be attached to and incorporated into the signed Agreement resulting from this IFB.

PERFORMANCE BOND

KNOW ALL MEN BY THESE PRESENTS:

That we, _____
hereinafter referred to as "Contractor", as principal, and _____
as surety, are held and firmly bound unto the Orange County Transportation Authority, State of California, in the sum _____
Dollars, ($_____), lawful money of the United States of America, for the payment of which sum, well and truly to be made, we bind ourselves, jointly and severally, firmly by these presents.

The condition of the foregoing obligation is such that,

WHEREAS, said Contractor has been awarded and is about to enter into the annexed Agreement with the Orange County Transportation Authority for the **IFB 4-2550, "REPLACEMENT OF MECHANICAL UNITS AT THE SANTA ANA BUS BASE,"** as specified in said Agreement, which is incorporated herein to this bond by reference, and is required under the terms of said Agreement to give this bond in connection with the execution thereof;

NOW THEREFORE, if the said Contractor shall well and truly do and perform all of the covenants and obligations of said Agreement on his part to be done and performed at the times and in the manner specified herein, then this obligation shall be null and void, otherwise it shall be and remain in full force and effect; and in the event said Contractor fails to fully perform all requirements in accordance with the terms and conditions of said Agreement, then surety shall enforce performance by the Contractor or shall pay the Orange County Transportation Authority for the same in an amount not exceeding the amount specified in this bond; and, further, if in the event suit is brought upon this bond then said surety shall pay the Orange County Transportation Authority for reasonable attorneys' fees to be fixed by the court;

PROVIDED, that any changes in the work to be done, or the material to be furnished, whether or not made pursuant to the terms of said contract, shall not in any way release either the Contractor or the surety there under, nor shall any extensions of time granted under the provisions of said contract release either the Contractor or the surety, and notice of such changes or extensions of the contract is hereby waived by the surety.

WITNESS our hands this _____ day of _____, 202_.

(SEAL)

_____
(Contractor)
By _____

Approved:

_____
(Title)

_____
(SEAL)

_____
(Surety)
By _____

PAYMENT BOND

KNOW ALL MEN BY THESE PRESENTS:

That we, _____
hereinafter referred to as "Contractor", as principal, and _____
as surety, are held and firmly bound unto the Orange County Transportation Authority, State of California, in the sum _____
Dollars, ($_____), lawful money of the United States of America, for the payment of which sum, well and truly to be made, we bind ourselves, jointly and severally, firmly by these presents.

The Condition of the foregoing obligation is such that,

WHEREAS, said Contractor has been awarded and is about to enter into the annexed Agreement with the ORANGE COUNTY TRANSPORTATION AUTHORITY for the **IFB 4-2550, "REPLACEMENT OF MECHANICAL UNITS AT THE SANTA ANA BUS BASE,"** as specified in said Agreement, which is incorporated herein to this bond by reference, and is required under the terms of said Agreement to give this bond in connection with the execution thereof;

NOW, THEREFORE, if said Contractor or a subcontractor fails to pay any of the persons named in Section 9100 of the Civil Code of the State of California, or amounts due under the Unemployment Insurance Code with respect to work or labor performed under the contract, or for any amounts required to be deducted, withheld and paid over to the Employment Development Department from the wages of employees of said Contractor and subcontractors pursuant to Section 13020 of the Unemployment Insurance Code with respect to such work and labor, then said surety will pay for the same, in an amount not exceeding the sum specified in this bond, and also, in case suit is brought upon this bond, a reasonable attorney's fee, to be fixed by the court. This bond shall inure to the benefit of all persons named in Section 9100 of the Civil Code of the State of California so as to give a right of action to such persons or their assigns in any suit brought upon this bond. This bond shall be subject to and include all of the provisions of Title 3 of Part 64 of Division 4 of the Civil Code of California relating to Payment Bond for Public Works, including but not confined to, Civil Code Sections 8150 – 8154, inclusive and Sections 9550 - 9566, inclusive.

PROVIDED, that any changes in the work to be done or the material to be furnished, whether or not made pursuant to the terms of said contract, shall not in any way release either the Contractor or the surety thereunder, nor shall any extensions of time granted under the provisions of said contract release either the Contractor or the surety, and notice of such alterations or extensions of the contract is hereby waived by the surety.

PAYMENT BOND, PAGE 2

WITNESS our hands this _____ day of _____, 202_.

(SEAL)

_____
(Contractor)

By _____

_____
(Title)

Approved:

_____
(Surety)

_____ By _____
(SEAL)

GUARANTY

The undersigned, as "Contractor," guarantees to the Orange County Transportation Authority that the materials furnished and the completed installation work, and the related work performed by the Contractor pursuant to Agreement No. **C-4-2550, "REPLACEMENT OF MECHANICAL UNITS AT THE SANTA ANA BUS BASE".**

A. For a period of one (1) year from the date of completion, as evidenced by the date of final acceptance of the work by the Authority, the Contractor warrants to the Authority that work performed and materials furnished under this Contract conforms to the Contract requirements and shall be free from any defect in design, material or workmanship performed by the Contractor or its subcontractors or suppliers. Notwithstanding the foregoing, Contractor shall not be liable for any defects of design, material or equipment provided by Authority.

B. Under this guaranty, the Contractor shall remedy at its own expense any such failure to conform or any such defect.

C. Nothing in the above intends or implies that this warranty shall apply to work, which has been abused or neglected by the Authority.

D. This guaranty shall be in addition to the other guarantees and warranties specified in the Agreement and shall be enforceable concurrently with, or in lieu of, said other guarantees.

Should any of the materials or equipment prove defective or should the work as a whole prove defective, due to faulty workmanship, material furnished or methods of installation, or should the work or any part thereof fail to operate properly as originally intended and in accordance with the plans and specifications, due to any of the above causes, all within twelve (12) months after the date on which the work is accepted by the Authority, the undersigned agrees to reimburse the Authority, upon demand, for its expenses incurred in restoring any such equipment or materials replaced and the cost of removing and replacing any other work without cost to the Authority so that said work will function correctly as originally contemplated.

The Authority shall have the unqualified option to make any needed replacements or repairs itself or to have such replacements or repairs done by the undersigned. In the event the Authority elects to have said work performed by the undersigned, the undersigned agrees that the repairs shall be made and such materials as are necessary shall be furnished and installed within a reasonable time after the receipt of demand from the Authority. If the undersigned shall fail or refuse to comply with its obligations under this guaranty, the Authority shall be entitled to all costs and expenses, including attorneys' fees, reasonably incurred by reasons of the said failure or refusal.

GUARANTY, PAGE 2

Subscribed and sworn to before me

this ___ day of _____, 202_

Seal of Notary

_____
Notary Public

_____
Name

_____
Title

_____
Signature

_____
Date

CONTRACT CHANGE ORDER

AGREEMENT NO. C-4-2550
EXHIBIT I

DATE:

PROJECT	OCTA NO	CONTRACT NO.	SUPPL NO.	CHANGE REQUESTED BY:
			N/A	☐ OWNER ☐ CONTRACTOR

TO: TITLE:	ACCOUNT CODE	OTHER ID

You are hereby directed to make the herein described changes from the plans and specifications or do the following work not included in the plans and specifications on this contract. NOTE: This change order is not effective until approved by the Orange County Transportation Authority's Manager of Contracts Administration and Materials Management or in the case of change orders in excess of $210,000.00 the Orange County Transportation Authority's Chief Executive Officer. Describe work to be performed, estimate of quantities, and prices to be paid. Segregate between additional work at contract price, agreed price, and force account. Unless otherwise stated, rates for rental equipment cover only such time as equipment is actually used and no allowance will be made for idle time.

Change Work Description:

MODIFICATIONS DUE TO THIS CHANGE ORDER:

TIME: 0 CALENDAR DAYS **PRICE: $0.00** ☐ INCREASE ☐ DECREASE

APPROVAL RECOMMENDED BY: _____ RESIDENT ENGINEER _____ DATE

APPROVAL RECOMMENDED BY: _____ PROJECT MANAGER _____ DATE

APPROVAL RECOMMENDED BY: _____ DIRECTOR OF RAIL PROGRAMS _____ DATE

APPROVAL RECOMMENDED BY: _____ EXECUTIVE DIRECTOR OF CAPITAL PROGRAMS _____ DATE

APPROVAL RECOMMENDED BY: _____ GENERAL COUNSEL _____ DATE

APPROVED BY: _____ CONTRACTS ADMINISTRATION AND MATERIALS MANAGEMENT _____ DATE

APPROVED BY: _____ CHIEF EXECUTIVE OFFICER _____ DATE

We, the Undersigned Contractor, have given careful consideration to the change and hereby agree that we will provide all equipment, furnish all materials, except as may otherwise be noted above, and perform all services necessary for the work above specified, and will therefore accept as full payment the prices shown above. Additionally, we agreed that the compensation (time and cost) set forth in this Change Order comprises the total compensation due the Contractor, and all the Subcontractors and all Suppliers, for the work or change defined in this Change Order, including all impact on any unchanged work. By signing this Change Order, the Contractor acknowledges and agrees, on behalf of themselves, all Subcontractors and all Suppliers, that the stipulated compensation includes payment for all work contained in this Change Order, plus all payments for interruption of schedules, extended overhead costs, delay, and all impact, ripple effect or cumulative impact on all other work under the Contract. The signing of this Change Order shall indicate that the Change Order constitutes the total equitable adjustment owed to the Contractor, all Subcontractors and all Suppliers, and the Contractor agrees to waive all rights, without exception or reservation of any kind whatsoever, to file any further claim or request for equitable adjustment of any type, for any reasonably foreseeable cause that shall arise out of or as a result of this Change Order or the impact of this Change Order on the remainder of the work under this Contract.

ACCEPTED BY: _____ CONTRACTOR _____ DATE

_____ NAME _____ TITLE

If the Contractor does not sign acceptance of this order, their attention is directed to the requirements of the specifications as to proceeding with the ordered work and filing a written protest within the time therein specified.

SECTION IV: AGREEMENT

AGREEMENT NO. C-4-2550

BETWEEN

ORANGE COUNTY TRANSPORTATION AUTHORITY

AND

THIS AGREEMENT is effective this _____ day of _____, 20__ ("Effective Date"), by and between the Orange County Transportation Authority, 550 South Main Street, P.O. Box 14184, Orange, CA 92863-1584, a public corporation of the State of California (hereinafter referred to as "AUTHORITY"), and , , , (hereinafter referred to as "CONTRACTOR").

WITNESSETH:

WHEREAS, AUTHORITY has determined that it requires replacement of mechanical units at the AUTHORITY's Santa Ana Bus Base; and

WHEREAS, said work cannot be performed by the regular employees of AUTHORITY; and

WHEREAS, CONTRACTOR has represented that it has the requisite personnel, experience, material, and equipment and is otherwise qualified to perform such services; and

WHEREAS, CONTRACTOR wishes to perform these services; and

WHEREAS, the AUTHORITY's Board of Directors authorized this Agreement on _____.

NOW, THEREFORE, it is mutually understood and agreed by AUTHORITY and CONTRACTOR as follows:

ARTICLE 1. COMPLETE AGREEMENT

A. This Agreement, including all exhibits and other documents incorporated herein and made applicable by reference, constitutes the complete and exclusive statement of the terms and conditions of the agreement between AUTHORITY and CONTRACTOR and it supersedes all prior representations, understandings and communications. The invalidity in whole or in part of any term or condition of this Agreement shall not affect the validity of other terms or conditions.

B. AUTHORITY's failure to insist in any one or more instances upon the performance of any

terms or conditions of this Agreement shall not be construed as a waiver or relinquishment of AUTHORITY's right to such performance by CONTRACTOR or to future performance of such terms or conditions and CONTRACTOR's obligation in respect thereto shall continue in full force and effect. CONTRACTOR shall be responsible for having taken steps reasonably necessary to ascertain the nature and location of the work, and the general and local conditions, which can affect the work or the cost thereof. Any failure by CONTRACTOR to do so will not relieve it from responsibility for successfully performing the work without additional expense to AUTHORITY.

C. AUTHORITY assumes no responsibility for any understanding or representations concerning conditions made by any of its officers, employees or agents prior to the execution of this Agreement, unless such understanding or representations by AUTHORITY are expressly stated in this Agreement.

D. Time shall be of the essence hereunder; but CONTRACTOR shall perform work hereunder only to the minimum extent consistent with requirements herein.

E. Changes to any portion of this Agreement shall not be binding upon AUTHORITY except when specifically confirmed in writing by an authorized representative of AUTHORITY and issued in accordance with the provisions of this Agreement.

ARTICLE 2. AUTHORITY DESIGNEE

The Chief Executive Officer of AUTHORITY, or designee, shall have the authority to act for and exercise any of the rights of AUTHORITY as set forth in this Agreement.

ARTICLE 3. SCOPE OF WORK

CONTRACTOR shall provide all labor, equipment, materials and facilities necessary for all work related to Replacement of Mechanical Units at Santa Ana Bus Base at the AUTHORITY's 4301 Mac Arthur Boulevard Santa Ana CA 92704 in strict compliance with all the requirements specified herein and in:

Exhibit A, entitled "General Provisions";

Addendum No's ;

Exhibit B, entitled "Specifications";

Exhibit C, entitled "List of Drawings";

Exhibit D, entitled "List of Subcontractors";

Exhibit E, entitled "Performance Bond";

Exhibit F, entitled "Payment Bond";

Exhibit G, entitled "Guaranty";

Exhibit H, entitled “Safety Specifications” and

Exhibit I, entitled “Contract Change Order”;

all of which documents are attached to and, by this reference, incorporated in and made a part of this Agreement. By this reference, also incorporated in and made a part of this Agreement are all applicable provisions of IFB and all representations made by CONTRACTOR in its original bid to AUTHORITY, including, but not limited to, CONTRACTOR's certifications relative to Workers' Compensation Insurance, and compliance with Section 7028.15 of the State of California Business and Professions Code.

ARTICLE 4. DELIVERY / RECOVERY SCHEDULE

A. CONTRACTOR shall fully complete the herein above described work within (720) calendar days from the effective date of written Notice to Proceed (NTP) issued by AUTHORITY. CONTRACTOR shall give AUTHORITY not less than seventy-two (72) hours advance notice of the start of any work. Within five (5) calendar days after said notice, CONTRACTOR shall provide any construction schedules as may be requested by AUTHORITY.

B. If at any time, the critical path schedule reflects -30 or a greater negative number of days of total float, then CONTRACTOR, within ten days after CONTRACTOR first becomes aware of such schedule delay, shall prepare and submit to AUTHORITY for review and approval a Recovery Schedule demonstrating CONTRACTOR’s proposed plan to regain lost schedule progress and to achieve the original contractual milestones in accordance with the Contract. AUTHORITY shall notify CONTRACTOR within ten days after receipt of each such Recovery Schedule whether the schedule is deemed accepted or rejected. Within five days after AUTHORITY’s rejection of the schedule, CONTRACTOR will resubmit a revised Recovery Schedule incorporating AUTHORITY’s comments.

When AUTHORITY accepts CONTRACTOR's Recovery Schedule, CONTRACTOR shall, within five days after AUTHORITY's acceptance, incorporate and fully include such schedule into the Project Schedule and deliver it to AUTHORITY.

C. All costs incurred by CONTRACTOR in preparing, implementing and achieving the Recovery Schedule shall be borne by CONTRACTOR and shall not result in a change to the contract price.

D. In the event that CONTRACTOR fails to provide an acceptable Recovery Schedule within 30 days of CONTRACTOR's receipt of a notice to do so, CONTRACTOR shall have no right to receive progress payments until CONTRACTOR has prepared and AUTHORITY has approved such Recovery Schedule.

ARTICLE 5. START OF WORK

CONTRACTOR shall incur no costs, and shall not perform or furnish any work, services, materials or equipment under this Agreement, unless and until a written Notice to Proceed has been given to CONTRACTOR by AUTHORITY. Conditions precedent to AUTHORITY issuing said Notice to Proceed are CONTRACTOR furnishing the Exhibit E "Performance Bond," Exhibit F "Payment Bond," Exhibit G "Guaranty," and certificates of insurance as set forth in Article 10 hereunder. CONTRACTOR shall furnish said documents within ten (10) calendar days after notification of contract award from AUTHORITY. Upon receipt of acceptable bonds, guaranty, and insurance certificates, AUTHORITY will within ten (10) working days thereafter issue the written Notice to Proceed.

ARTICLE 6. PAYMENT

A. For CONTRACTOR's full and complete performance of its obligations under this Agreement, and subject to the maximum cumulative payment obligation provision set forth in Article 7, AUTHORITY shall pay CONTRACTOR the firm fixed sum of _____ Dollars ($ .00).

B. Progress payments and the final payment will be made by AUTHORITY to CONTRACTOR in accordance with the terms as set forth in Exhibit A, "General Provisions," under the "Progress Payments" and "Final Payment and Claims" sections therein. The acceptance by CONTRACTOR of AUTHORITY's final payment hereunder shall constitute a waiver of all claims against AUTHORITY under

or arising out of this herein Agreement, as such may from time to time be amended.

C. Failure by AUTHORITY to pay amount in dispute shall not alleviate, diminish or modify in any respect the CONTRACTOR's obligation to achieve final acceptance of and all work in accordance with the contract documents, and CONTRACTOR shall not cease or slow down its performance under this Agreement on account of any such amount in dispute. CONTRACTOR shall proceed as directed by AUTHORITY pending resolution of dispute. Upon resolution of dispute, each party shall promptly pay any amount owing.

ARTICLE 7. MAXIMUM OBLIGATION

Notwithstanding any provisions of this Agreement to the contrary, AUTHORITY and CONTRACTOR mutually agree that AUTHORITY's maximum cumulative payment obligation hereunder (including obligation for CONTRACTOR 's profit), shall be ___ Dollars ($ .00), which shall include all amounts payable to CONTRACTOR for its subcontracts, leases, materials and costs arising from, or due to termination of, this Agreement.

ARTICLE 8. NOTICES

All notices hereunder and communications regarding the interpretation of the terms of this Agreement, or changes thereto, shall be effected by delivery of said notices in person or by depositing said notices in the U.S. mail, registered or certified mail, returned receipt requested, postage prepaid and addressed as follows:

To CONTRACTOR:	To AUTHORITY:
	Orange County Transportation Authority
	550 South Main Street
	P.O. Box 14184
,	Orange, CA 92863-1584
ATTENTION:	ATTENTION: Josie Mellen
Title:	Title: Senior Contract Administrator
Phone:	Phone: (714) 560 - 5078

Email:	Email: jmellen@octa.net
	ATTENTION:
	Title: Nhatran Do
	Senior Project Manager
	Phone: (714) 560 - 5831
	Email: ndo@octa.net

ARTICLE 9. INDEPENDENT CONTRACTOR

A. CONTRACTOR's relationship to AUTHORITY in the performance of this Agreement is that of an independent contractor. CONTRACTOR's personnel performing work under this Agreement shall at all times be under CONTRACTOR's exclusive direction and control and shall be employees of CONTRACTOR and not employees of AUTHORITY. CONTRACTOR shall pay all wages, salaries and other amounts due its employees in connection with this Agreement and shall be responsible for all reports and obligations respecting them, such as social security, income tax withholding, unemployment compensation, workers' compensation and similar matters.

B. Should CONTRACTOR's personnel or a state or federal agency allege claims against AUTHORITY involving the status of AUTHORITY as employer, joint or otherwise, of said personnel, or allegations involving any other independent contractor misclassification issues, CONTRACTOR shall defend and indemnify AUTHORITY in relation to any allegations made.

ARTICLE 10. INSURANCE

A. CONTRACTOR shall procure and continuously maintain in full force and effect through contract completion, insurance coverages specified herein. Coverages shall not be subject to self-insurance provisions. CONTRACTOR shall provide the following insurance coverage:

1. Commercial General Liability, to include Products/Completed Operations, Independent Contractors', Contractual Liability, and Personal Injury, and Property Damage with a minimum limit of $1,000,000 per occurrence and $2,000,000 general aggregate.

2. Automobile Liability to include owned, hired and non-owned autos with a combined single limit of $1,000,000 each accident;

3. Workers' Compensation with limits as required by the State of California, including waiver of subrogation, in favor of AUTHORITY, its officers, directors, employees and agents.

4. Builders All Risk policy or course of construction including earthquake and flood coverage with minimum limits of $*(project amount)*.

5. Employers' Liability with minimum limits of $1,000,000.

B. Prior to commencement of any work hereof, CONTRACTOR shall furnish to AUTHORITY's Contract Administrator broker-issued insurance certificate showing the required insurance coverages and further providing that:

1. AUTHORITY, its officers, directors, employees and agents must be named as additional insured on Commercial General Liability and Automobile Liability policy with respect to performance hereunder; and

2. The coverage shall be primary and noncontributory as to any other insurance with respect to performance hereunder; and

3. Thirty (30) days prior written notice of cancellation or material change be given to AUTHORITY.

In addition, CONTRACTOR shall provide insurance policy blanket endorsement.

C. "Occurrence," as used herein, means any event or related exposure to conditions, which result in bodily injury or property damage.

D. The Certificate of Insurance shall reference Agreement Number C-4-2550 and, the Contract Administrator's Name, Josie Mellen.

E. Upon AUTHORITY's request, certified, true and exact copies of each of the insurance policies shall be provided to AUTHORITY.

F. AUTHORITY shall notify CONTRACTOR in writing of any changes in the requirements to insurance required to be provided by CONTRACTOR. Except as set forth in this Article, any additional

cost from such change shall be paid by AUTHORITY and any reduction in cost shall reduce the contract price pursuant to a change order.

G. CONTRACTOR shall also include in each subcontract the stipulation that subcontractors shall maintain coverage in the amounts required as provided in this Agreement.

H. CONTRACTOR shall be required to immediately notify AUTHORITY of any modifications or cancellation of any required insurance policies.

ARTICLE 11. BONDS

A. By submitting Exhibit E, entitled “Performance Bond," and Exhibit F, entitled "Payment Bond," CONTRACTOR shall satisfy AUTHORITY's requirements that CONTRACTOR deposit with AUTHORITY bonds with values in the sum of 100 percent of this Agreement's price to cover CONTRACTOR's failure to fully perform hereunder and CONTRACTOR's failure to pay its labor, material or failure to comply with Article 32 of this Agreement, in performing hereunder. If the contract price is increased in connection with a Change Order, the AUTHORITY may, in its sole discretion, require a corresponding increase in the amount of the Performance and Payment bonds or new bonds covering the Change Order work.

B. Notwithstanding any other provision set forth in this Agreement, performance by a Surety or Guarantor of any obligations of CONTRACTOR shall not relieve CONTRACTOR of any of its obligations thereunder.

ARTICLE 12. ORDER OF PRECEDENCE

Conflicting provisions hereof, if any, shall prevail in the following descending order of precedence: (1) the provisions of this Agreement, including its exhibits; (2) the provisions of IFB including all Addendums; (3) the bid submitted to AUTHORITY by CONTRACTOR in response to said IFB; and (4) any other documents, cited herein or incorporated by reference. In the event of conflicting provisions of Exhibit B (“Specifications”), and Exhibit C ("List of Drawings"), Project Specifications shall take precedence.

ARTICLE 13. CHANGES

A. By written notice or order, AUTHORITY may, from time to time, order work suspension and/or

make any change in the general scope of this Agreement, including, but not limited to, changes in the drawings, specifications, schedules (either deceleratory or acceleratory) or any other particular of the specifications or provisions of this Agreement. If any such work suspension or change causes an increase or decrease in the price or time required for performance, CONTRACTOR shall promptly notify AUTHORITY thereof and assert its claim for adjustment within ten (10) calendar days after the change or work suspension is ordered, and an equitable adjustment shall be negotiated. However, nothing in this clause shall excuse CONTRACTOR from proceeding immediately with the Agreement as changed. Changes will be made in accordance with the terms as set forth in Exhibit A, "General Provisions," paragraph F, Extra Work and Changes, by written Change Order.

B. No claims by CONTRACTOR for equitable adjustment hereunder shall be allowed if asserted after final payment under this Agreement.

C. Any work done beyond the technical provisions specified in this Agreement, or any extra work done without AUTHORITY's written authority, will be considered unauthorized work and will not be paid for. Upon order of AUTHORITY's Engineer or its designee, unauthorized work shall be remedied, removed or replaced at CONTRACTOR's expense.

ARTICLE 14. MODIFICATION PROPOSALS-PRICE BREAKDOWN

CONTRACTOR, in connection with any proposal it makes for an agreement modification, shall furnish a price breakdown, itemized as required by AUTHORITY. Unless otherwise directed, the breakdown shall be in sufficient detail to permit an analysis of all material, labor, equipment, subcontract and overhead costs, as well as profit, and shall cover all work involved in the modification, whether such work was deleted, added or changed. Any amount claimed for subcontracts shall be supported by a similar price breakdown. In addition, if the proposal includes a time extension, a justification therefore shall also be furnished. The proposal, together with the price breakdown and time extension justification, shall be furnished by the date specified by AUTHORITY.

ARTICLE 15. DISPUTES

A. Except as otherwise provided in this Agreement, when a dispute arises between

CONTRACTOR and AUTHORITY, the project managers shall meet to resolve the issue. If project managers do not reach a resolution, the dispute will be decided by AUTHORITY's Director of Contracts Administration and Materials Management (CAMM), who shall reduce the decision to writing and mail or otherwise furnish a copy thereof to CONTRACTOR. The decision of the Director, CAMM, shall be the final and conclusive administrative decision.

B. Pending final decision of a dispute hereunder, CONTRACTOR shall proceed diligently with the performance of this Agreement and in accordance with the decision of AUTHORITY's Director, CAMM. Nothing in this Agreement, however, shall be construed as making final the decision of any AUTHORITY official or representative on a question of law, which questions shall be settled in accordance with the laws of the State of California.

ARTICLE 16. TERMINATION FOR CONVENIENCE

A. AUTHORITY may terminate this Agreement for its convenience at any time in whole or in part, by giving CONTRACTOR written notice thereof. AUTHORITY shall terminate by delivering to CONTRACTOR a written Notice of Termination for Convenience specifying the extent of termination and its effective date. Upon termination, AUTHORITY shall pay CONTRACTOR its allowable costs incurred to date of that portion terminated. The rights, duties and obligations of the parties shall be construed in accordance with the applicable provisions of CFR Title 48, Chapter 1, Part 49, of the Federal Acquisition Regulation (FAR) and specific subparts and other provisions thereof applicable to termination for convenience. If AUTHORITY sees fit to terminate this Agreement for convenience, said notice shall be given to CONTRACTOR in accordance with the provisions of the FAR referenced above and Article 8, herein. Upon receipt of said notification, CONTRACTOR shall immediately proceed with all obligations, regardless of any delay in determining or adjusting any amounts due under this Article, and agrees to comply with all applicable provisions of the FAR pertaining to termination for convenience.

ARTICLE 17. TERMINATION FOR DEFAULT-DAMAGES FOR DELAY-TIME EXTENSIONS

A. If CONTRACTOR refuses or fails to prosecute the work, or any separable part thereof, with such diligence as will ensure its completion within the time specified in this Agreement, or any extension

thereof, or fails to complete said work within such time, AUTHORITY may, by written notice to CONTRACTOR, terminate CONTRACTOR's right to proceed with the work or such part of the work as to which there has been delay. In such event, AUTHORITY may take over the work and prosecute the same to completion, by Agreement or otherwise, and may take possession of and utilize in completing the work such materials, appliances and plant as may be on the site of the work and necessary therefore. Whether or not CONTRACTOR's right to proceed with the work is terminated, it and its sureties shall be liable for any damage to AUTHORITY resulting from its refusal or failure to complete the work within the specified time.

B. If AUTHORITY so terminates CONTRACTOR's right to proceed, the resulting damage will consist of such liquidated damages as set forth in the Article 31 in this Agreement entitled "Liquidated Damages," until such reasonable time as may be required for final completion of the work together with any increased costs occasioned AUTHORITY in completing the work. If AUTHORITY does not so terminate CONTRACTOR's right to proceed, the resulting damage will consist of such liquidated damages until the work is completed or accepted.

C. CONTRACTOR's right to proceed shall not be so terminated nor the CONTRACTOR charged with resulting damage if:

1. The delay in completing the work arises from unforeseeable causes beyond the control and without the fault or negligence of CONTRACTOR, including but not restricted to, acts of God, acts of the public enemy, acts or omissions of AUTHORITY, acts of another CONTRACTOR in the performance of an Agreement with AUTHORITY, fires, floods, epidemics, quarantine restrictions, freight embargoes, unusually severe weather, or delays of subcontractors or suppliers arising from unforeseeable causes beyond the control and without the fault or negligence of both CONTRACTOR and such subcontractors or suppliers; and

2. CONTRACTOR, within ten (10) calendar days from the beginning of any such delay, notifies AUTHORITY in writing of the causes of delay. AUTHORITY shall ascertain the facts and the extent of the delay and extend the time for completing the work when, in its judgment, the findings of fact

justify such an extension, and its findings of fact shall be final and conclusive on the parties, subject only to appeal as provided in the "Disputes" clause of this Agreement. Any such time extensions will not become effective until approved by AUTHORITY's Engineer in writing. AUTHORITY's Engineer will furnish CONTRACTOR a weekly statement showing the number of calendar days charged to the Agreement for the preceding week, the number of calendar days of time extensions being considered or approved, the number of calendar days originally specified for the completion of this Agreement and the number of calendar days remaining to complete this Agreement, and the extended date for completion thereof.

3. Should at any time extensions be included by AUTHORITY's Engineer on the Weekly Statement of Contract Calendar Days, a change order covering the sum total of the time extensions will be issued to CONTRACTOR at periodic intervals during the project.

D. If, after notice of termination of CONTRACTOR's right to proceed under the provisions of this clause, it is determined for any reason that CONTRACTOR was not in default under the provisions of this clause, or that the delay was excusable under the provisions of this clause, the rights and obligations of the parties shall be the same as if the notice of termination had been issued pursuant to Article 16, entitled "Termination for Convenience."

E. The rights and remedies of AUTHORITY provided in this clause are in addition to any other rights and remedies provided by law or under this Agreement.

F. As used in paragraph C.1 of this Article, the term "subcontractors or suppliers," means subcontractors or suppliers at any tier.

ARTICLE 18. INDEMNIFICATION

CONTRACTOR shall indemnify, defend, and hold harmless AUTHORITY, its officers, directors, employees and agents from and against any and all claims (including attorneys' fees and reasonable expenses for litigation or settlement) for any loss, costs, penalties, fines, damages, bodily injuries, including death, damage to or loss of use of property, arising out of, resulting from, or in connection with the performance of CONTRACTOR, its officers, directors, employees, agents, subcontractors or

suppliers under the Agreement. Notwithstanding the foregoing, such obligation to defend, hold harmless, and indemnify AUTHORITY, its officers, directors, employees and agents shall not apply to such claims or liabilities arising from the sole or active negligence or willful misconduct of AUTHORITY.

ARTICLE 19. ASSIGNMENTS AND SUBCONTRACTS

A. Neither this Agreement nor any interest herein nor claim hereunder may be assigned by CONTRACTOR either voluntarily or by operation of law. CONTRACTOR shall not have the right to make any substitutions of any subcontractor listed in Exhibit D, entitled "List of Subcontractors," except in accordance with the provisions of the Subletting and Subcontractors Fair Practices Act, Public Contract Code section 4100 et. seq. AUTHORITY's consent shall not be deemed to relieve CONTRACTOR of its obligation to fully comply with the requirements of this Agreement.

B. CONTRACTOR shall be fully responsible to AUTHORITY for all acts and omissions of its own employees, and of subcontractors and their employees. CONTRACTOR shall coordinate the work performed by subcontractor.

C. AUTHORITY shall have the right, but not the obligation, to review the form of subcontract used by CONTRACTOR for the project and to require modifications thereto to conform to the requirements set forth herein.

ARTICLE 20. AUDIT AND INSPECTION OF RECORDS

CONTRACTOR shall provide AUTHORITY, or other agents of the AUTHORITY, such access to CONTRACTOR's accounting books, records, payroll documents and facilities of the CONTRACTOR which are directly pertinent to this Agreement for the purposes of examining, auditing and inspecting all accounting books, records, work data, documents and activities related hereto. CONTRACTOR shall maintain such books, records, data and documents in accordance with generally accepted accounting principles and shall clearly identify and make such items readily accessible to such parties during CONTRACTOR's performance hereunder and for a period of four (4) years from the date of final payment by AUTHORITY, except in the event of litigation or settlement of claims arising from the performance of this Agreement, in which case CONTRACTOR agrees to maintain same until AUTHORITY, or any of

their duly authorized representatives, have disposed of all such litigation, appeals, claims or exceptions related thereto. AUTHORITY's right to audit books and records directly related to this Agreement shall also extend to all first-tier subcontractors. CONTRACTOR shall permit any of the foregoing parties to reproduce documents by any means whatsoever or to copy excerpts and transcriptions as reasonably necessary.

ARTICLE 21. CONFLICT OF INTEREST

CONTRACTOR agrees to avoid organizational conflicts of interest. An organizational conflict of interest means that due to other activities, relationships or contracts, the CONTRACTOR is unable, or potentially unable to render impartial assistance or advice to the AUTHORITY; CONTRACTOR's objectivity in performing the work identified in the Scope of Work is or might be otherwise impaired; or the CONTRACTOR has an unfair competitive advantage. CONTRACTOR is obligated to fully disclose to the AUTHORITY in writing Conflict of Interest issues as soon as they are known to the CONTRACTOR. All disclosures must be submitted in writing to AUTHORITY pursuant to the Notice provision herein. This disclosure requirement is for the entire term of this Agreement.

ARTICLE 22. CODE OF CONDUCT

CONTRACTOR agrees to comply with the AUTHORITY's Code of Conduct as it relates to Third-Party contracts which is hereby referenced and by this reference is incorporated herein. CONTRACTOR agrees to include these requirements in all of its subcontracts.

ARTICLE 23. PROHIBITION ON PROVIDING ADVOCACY SERVICES

CONTRACTOR and all subcontractors performing work under this Agreement, shall be prohibited from concurrently representing or lobbying for any other party competing for a contract with AUTHORITY, either as a prime contractor or subcontractor. Failure to refrain from such representation may result in termination of this Agreement.

ARTICLE 24. FEDERAL, STATE AND LOCAL LAWS

CONTRACTOR warrants that in the performance of this Agreement it shall comply with all applicable federal, state and local laws, statutes and ordinances and all lawful orders, rules and

regulations promulgated thereunder.

ARTICLE 25. EQUAL EMPLOYMENT OPPORTUNITY

In connection with its performance under this Agreement, CONTRACTOR agrees that it shall not discriminate against any employee or applicant for employment because of race, religion, color, sex, age or national origin. CONTRACTOR shall take affirmative action to ensure that applicants are employed, and that employees are treated during their employment, without regard to their race, religion, color, sex, age or national origin. Such actions shall include, but not be limited to, the following: employment, upgrading, demotion or transfer; recruitment or recruitment advertising; layoff or termination; rates of pay or other forms of compensation; and selection for training, including apprenticeship.

ARTICLE 26. FINISHED AND PRELIMINARY DATA

A. All of CONTRACTOR's finished technical data, including but not limited to illustrations, photographs, tapes, software, software design documents, including without limitation source code, binary code, all media, technical documentation and user documentation, photoprints and other graphic information required to be furnished under this Agreement, shall be AUTHORITY's property upon payment and shall be furnished with unlimited rights and, as such, shall be free from proprietary restriction except as elsewhere authorized in this Agreement. CONTRACTOR further agrees that it shall have no interest or claim to such finished, AUTHORITY-owned, technical data; furthermore, said data is subject to the provisions of the Public Records Act.

B. It is expressly understood that any title to preliminary technical data is not passed to AUTHORITY but is retained by CONTRACTOR. Preliminary data includes roughs, visualizations, software design documents, layouts and comprehensives prepared by CONTRACTOR solely for the purpose of demonstrating an idea or message for AUTHORITY's acceptance before approval is given for preparation of finished artwork. Preliminary data title and right thereto shall be made available to AUTHORITY if CONTRACTOR causes AUTHORITY to exercise Article 17, and a price shall be negotiated for all preliminary data.

/

ARTICLE 27. PRIVACY ACT

CONTRACTOR shall comply with, and assures the compliance of its employees with, the information restrictions and other applicable requirements of the Privacy Act of 1974, 5 U.S.C. §552a. Among other things, CONTRACTOR agrees to obtain the express consent of the Federal Government before CONTRACTOR or its employees operate a system of records on behalf of the Federal Government. CONTRACTOR understands the requirements of the Privacy Act, including the civil and criminal penalties for violation of that Act, apply to those individuals involved, and that failure to comply with the terms of the Privacy Act may result in termination of the underlying Agreement.

ARTICLE 28. OWNERSHIP OF REPORTS AND DOCUMENTS

A. The originals of all letters, documents, reports and other products and data produced under this Agreement shall be delivered to, and become the property of AUTHORITY. Copies may be made for CONTRACTOR'S records but shall not be furnished to others without written authorization from AUTHORITY. Such deliverables shall be deemed works made for hire and all rights in copyright therein shall be retained by AUTHORITY.

B. All ideas, memoranda, specifications, plans, manufacturing, procedures, drawings, descriptions, and all other written information submitted to CONTRACTOR in connection with the performance of this Agreement shall not, without prior written approval of AUTHORITY, be used for any purposes other than the performance under this Agreement, nor be disclosed to an entity not connected with the performance of the project. CONTRACTOR shall comply with AUTHORITY's policies regarding such material. Nothing furnished to CONTRACTOR, which is otherwise known to CONTRACTOR or is or becomes generally known to the related industry shall be deemed confidential. CONTRACTOR shall not use AUTHORITY's name, photographs of the project, or any other publicity pertaining to the project in any professional publication, magazine, trade paper, newspaper, seminar or other medium without the express written consent of AUTHORITY.

C. No copies, sketches, computer graphics or graphs, including graphic artwork, are to be released by CONTRACTOR to any other person or agency except after prior written approval by

AUTHORITY, except as necessary for the performance of services under this Agreement. All press releases, including graphic display information to be published in newspapers, magazines, etc., are to be handled only by AUTHORITY unless otherwise agreed to by CONTRACTOR and AUTHORITY.

ARTICLE 29. CONVICT LABOR

In connection with the performance of work under this Agreement, CONTRACTOR agrees not to employ any person undergoing sentence of imprisonment at hard labor. This does not include convicts who are on parole or probation.

ARTICLE 30. NOTICE OF LABOR DISPUTE

Whenever CONTRACTOR has knowledge that any actual or potential labor dispute may delay its performance under this Agreement, CONTRACTOR shall immediately notify and submit all relevant information to AUTHORITY. CONTRACTOR shall insert the substance of this entire clause in any subcontract hereunder as to which a labor dispute may delay performance under this Agreement. However, any subcontractor need give notice and information only to its next higher-tier subcontractor.

ARTICLE 31. LIQUIDATED DAMAGES

If CONTRACTOR fails to complete the work within the time specified in Article 4 of this Agreement, or any AUTHORITY authorized extension thereof, the actual damage to AUTHORITY for the delay will be difficult or impossible to determine. Therefore, in lieu of actual damages, CONTRACTOR shall pay to AUTHORITY as fixed, agreed-to liquidated damages for each calendar day of delay the sum of Three Hundred Dollars ($300 .00). Alternatively, AUTHORITY may terminate this Agreement in whole or in part as provided in Article 16 of this Agreement, and in that event, CONTRACTOR shall be liable, in addition to the excess costs provided in Article 16 of this Agreement, for such liquidated damages accruing until such time as AUTHORITY may reasonably obtain delivery or performance of similar supplies or services from a different source. CONTRACTOR shall not be charged with liquidated damages when the delay is determined to be excusable in accordance with Article 45 hereunder. AUTHORITY shall ascertain the facts and extent of the delay and shall extend the time for performance of the Agreement when in its judgment, the findings of fact justify an extension.

ARTICLE 32. WARRANTY

A. In addition to any other warranties set forth in this Agreement, whether expressed or implied, CONTRACTOR warrants that (1) all work performed and all equipment and material provided under this Agreement by CONTRACTOR or any of its subcontractors or suppliers at any tier, conforms to the requirements herein and is free of any defects; (2) equipment furnished by CONTRACTOR or any of its subcontractors or suppliers at any tier, shall be of modern design, in good working condition and fit for use of its intended purpose; and (3) all work shall meet all of the requirements of this Agreement. Such warranty shall continue for a period of one (1) year from AUTHORITY's acceptance as shown in Article 34 hereunder. Under this warranty, CONTRACTOR shall remedy at its own expense any such failure to conform or correct any such defect. In addition, CONTRACTOR shall remedy at its own expense any damage to AUTHORITY owned or controlled real or personal property, when that damage is the result of CONTRACTOR's failure to conform to Agreement requirements or any such defect of equipment, material, workmanship or design. CONTRACTOR shall also restore any work damaged in fulfilling the terms of this clause. CONTRACTOR's warranty with respect to work repaired or replaced hereunder will run for one year from the date of such repair or replacement.

B. AUTHORITY shall notify CONTRACTOR in writing within a reasonable time after the discovery of any failure, defect or damage. CONTRACTOR has seven days from receipt of notice from AUTHORITY to respond to AUTHORITY's notification and indicate how CONTRACTOR will remedy the failure, defect, or damage. If AUTHORITY is not satisfied with the remedy proposed by CONTRACTOR, CONTRACTOR and AUTHORITY shall meet and mutually agree when and how CONTRACTOR shall remedy such violation. In the case of an emergency requiring immediate corrective action, CONTRACTOR shall implement such action, as it deems necessary and shall notify AUTHORITY in writing of the urgency of a decision and action taken. CONTRACTOR and AUTHORITY shall, then promptly meet in order to agree on a remedy. If CONTRACTOR and AUTHORITY fail to agree on the remedy within a five-day period, AUTHORITY, after notice to CONTRACTOR, shall have the right to perform or have performed by third parties the necessary remedy, and the costs thereof shall be borne

by CONTRACTOR.

C. Should CONTRACTOR fail to remedy any failure, defect or damage described in paragraph A above within a reasonable time after receipt of notice thereof, AUTHORITY shall have the right to replace, repair or otherwise remedy such failure, defect or damage at CONTRACTOR's expense and CONTRACTOR shall be liable for all damages, including, but not limited to, actual or consequential damages and cost of any suit to enforce AUTHORITY's rights hereunder, including reasonable attorney's fees.

D. In addition to the other rights and remedies provided by this clause, all subcontractors, manufacturers, and suppliers' warranties, expressed or implied, respecting any work and materials furnished hereunder, shall, at the direction of AUTHORITY, be enforced by CONTRACTOR for the benefit of AUTHORITY. In such case if CONTRACTOR's warranty under paragraph A above has expired, any suit directed by AUTHORITY shall be at the expense of AUTHORITY. CONTRACTOR shall obtain any warranties, which the subcontractors, manufacturers or suppliers would give in normal commercial practice and shall cause all subcontractor or supplier warranties to be extend to AUTHORITY.

E. If directed by AUTHORITY, CONTRACTOR shall require any such warranties to be executed in writing to AUTHORITY.

F. Notwithstanding any other provision of this clause, unless such a defect is caused by the negligence of CONTRACTOR or its subcontractors or suppliers at any tier, CONTRACTOR shall not be liable for the repair of any defects of material or design furnished by AUTHORITY nor for the repair of any damage which results from any such defect in AUTHORITY furnished material or design.

G. The warranty specified herein shall not limit AUTHORITY's rights under the Inspection and Acceptance clause of this Agreement with respect to latent defects, gross mistakes or fraud.

H. Defects in design or manufacture of equipment specified by AUTHORITY on a "brand name and model" basis shall not be included in this warranty. CONTRACTOR shall require any subcontractors, manufacturers or suppliers thereof to execute their warranties in writing directly to AUTHORITY.

I. Any disagreement between AUTHORITY and CONTRACTOR relating to this section shall be

subject to dispute resolution in accordance with Article 15.

ARTICLE 33. GENERAL WAGE RATES

A. All laborers and mechanics employed by CONTRACTOR or subcontractor at any tier working on the construction site, will be paid unconditionally and not less often than once a week and without any subsequent deduction or rebate on any account (except such payroll deductions as are permitted or required by federal, state or local law, regulation or ordinance), the full amounts due at the time of payment computed at wage rates and per diem rate not less than the aggregate of the highest of the two basic hourly rates and rates of payments, contributions or costs for any fringe benefits contained in the current general prevailing wage rate(s) and per diem rate(s), established by the Director of the Department of Industrial Relations of the State of California, (as set forth in the Labor Code of the State of California, commencing at Section 1770 et. seq.), regardless of any contractual relationship which may be alleged to exist between CONTRACTOR or subcontractor and their respective mechanics, laborers, journeypersons, workpersons, craftspersons or apprentices. Copies of the current General Prevailing Wage Determinations and Per Diem Rates are on file at AUTHORITY's offices and will be made available to CONTRACTOR upon request. CONTRACTOR shall post a copy thereof at each job site at which work hereunder is performed.

B. In addition to the foregoing, CONTRACTOR agrees to comply with all other provisions of the Labor Code of the State of California, which are incorporated herein by reference, pertaining to workers performing work hereunder including, but not limited to, those provisions for work hours, payroll records and apprenticeship employment and regulation program. CONTRACTOR agrees to insert or cause to be inserted the preceding clause in all subcontracts, which provide for workers to perform work hereunder regardless of the subcontractor tier.

ARTICLE 34. INSPECTION AND ACCEPTANCE

A. All work (which term includes but is not restricted to materials, equipment, workmanship, and manufacture and fabrication of components) shall be subject to inspection and test by AUTHORITY at all reasonable times and at all places prior to acceptance. Any such inspection and test is for the sole benefit

of AUTHORITY and shall not relieve CONTRACTOR of the responsibility of providing quality control measures to assure that the work strictly complies with requirements of this Agreement. No inspection or test by AUTHORITY or its representative shall be construed as constituting or implying acceptance. Inspection or test shall not relieve CONTRACTOR of responsibility for damage to or loss of the material prior to acceptance, nor in any way affect the continuing rights of AUTHORITY after acceptance of the completed work under the terms of paragraph F of this Article, except as herein above provided.

B. CONTRACTOR shall, without charge, replace any material or correct any workmanship found by AUTHORITY not to conform to the requirements of this Agreement, unless in the public interest AUTHORITY consents to accept such material or workmanship with an appropriate adjustment in the price of this Agreement. CONTRACTOR shall promptly segregate and remove rejected material from the premises.

C. CONTRACTOR shall furnish promptly, without additional charge, all facilities, labor, equipment and material reasonably needed for performing such safe and convenient inspection and test as may be required by AUTHORITY. All inspections and tests by AUTHORITY shall be performed in such manner as to not unnecessarily delay the work. AUTHORITY reserves the right to charge to CONTRACTOR any additional cost of inspection or test when material or workmanship is not ready at the time specified by CONTRACTOR for inspection or test or when reinspection or retest is necessitated by prior rejection.

D. If CONTRACTOR does not promptly replace rejected material or correct rejected workmanship, AUTHORITY (1) may, by Agreement or otherwise, replace such material or correct such workmanship and charge the cost thereof to CONTRACTOR, or (2) may terminate CONTRACTOR's right to proceed in accordance with the clause of this Agreement entitled "Termination for Default."

E. Should it be considered necessary or advisable by AUTHORITY at any time before acceptance of the entire work to make an examination of work already completed, by removing or tearing out same, CONTRACTOR shall, on request, promptly furnish all necessary facilities, labor and material. If such work is found to be defective or nonconforming in any material respect, due to the fault of

CONTRACTOR or its subcontractors, CONTRACTOR shall pay all costs of such examination and of satisfactory reconstruction. If, however, such work is found to meet the requirements of this Agreement, an equitable adjustment shall be made in the Agreement price to compensate CONTRACTOR for the additional services involved in such examination and reconstruction and, if completion of the work has been delayed thereby, it shall in addition, be granted a suitable extension of time.

F. Unless otherwise provided in this Agreement, acceptance by AUTHORITY shall be made as promptly as practicable after completion and inspection of all work required by this Agreement, or that portion of the work that AUTHORITY determines can be accepted separately. Acceptance shall be final and conclusive except as regards latent defects, fraud, or such gross mistakes as may amount to fraud or as regards AUTHORITY's rights under the warranty provisions set forth herein.

ARTICLE 35. MATERIAL AND WORKMANSHIP

A. Unless otherwise specifically provided in this Agreement, all equipment, material, and articles incorporated in the work covered by this Agreement are to be new and of the most suitable grade for the purpose intended. Unless otherwise specifically provided in this Agreement, reference to any equipment, material, article or patented process, by trade name, make or catalog number, shall be regarded as establishing a standard of quality and shall not be construed as limiting competition, and CONTRACTOR may, at its option, use any equipment, material, article or process which, in the judgment of AUTHORITY, is equal to that named. CONTRACTOR shall furnish to AUTHORITY for its approval the name of the manufacturer, the model number and other identifying data and information respecting the performance, capacity, nature and rating of the machinery and mechanical and other equipment, which CONTRACTOR contemplates incorporating in the work. When required by this Agreement or when called for by AUTHORITY, CONTRACTOR shall furnish AUTHORITY, for approval, full information concerning the material or articles, which it contemplates incorporating in the work. When so directed, samples shall be submitted for approval at CONTRACTOR's expense, with all shipping charges prepaid. Machinery, equipment, material and articles installed or used without required approval shall be at the risk of subsequent rejection.

B. All work under this Agreement shall be performed in a skillful and workmanlike manner. Notwithstanding the provisions of Article 3 hereof, AUTHORITY may, in writing, require CONTRACTOR to remove from the work any employee AUTHORITY deems incompetent, careless or otherwise objectionable.

ARTICLE 36. NON-CONFORMING WORK

A. Nonconforming work rejected by AUTHORITY shall be removed and replaced so as to conform to the requirements of this Agreement, at CONTRACTOR's cost and without a time extension; and CONTRACTOR shall promptly take all action necessary to prevent similar deficiencies from occurring in the future. The fact that AUTHORITY may not have discovered the nonconforming Work shall not constitute an acceptance of such nonconforming Work. If CONTRACTOR fails to correct any nonconforming work within ten days of receipt of notice from AUTHORITY requesting correction, or if such nonconforming work cannot be corrected within ten days, and CONTRACTOR fails to (1) provide to AUTHORITY a schedule for correcting any such nonconforming work acceptable to AUTHORITY within such ten-day period, (2) commence such corrective work within such ten-day period and (3) thereafter diligently prosecute such correction in accordance with such approved schedule to completion, then AUTHORITY may cause the nonconforming work to be remedied or removed and replaced and may deduct the cost of doing so from any moneys due or to become due CONTRACTOR and/or obtain reimbursement from CONTRACTOR for such cost.

B. If AUTHORITY agrees to accept any Nonconforming Work without requiring it to be fully corrected, AUTHORITY shall be entitled to reimbursement of a portion of the Contract Price in an amount equal to the greater of the amount deemed appropriate by AUTHORITY to provide compensation for future maintenance and/or other costs relating to the Nonconforming Work, or 100% of CONTRACTOR's cost savings associated with its failure to perform the Work in accordance with Contract requirements. Such reimbursement shall be payable to AUTHORITY within ten days after CONTRACTOR's receipt of an invoice thereof. CONTRACTOR acknowledges and agrees that AUTHORITY shall have sole discretion regarding acceptance or rejection of Nonconforming Work and that AUTHORITY shall have

sole discretion with regard to the amount payable in connection therewith.

ARTICLE 37. CONTRACTOR INSPECTION SYSTEM

CONTRACTOR shall maintain an adequate inspection system and perform such inspections as will assure that the work performed under this Agreement conforms to the specified requirements, and shall maintain and make available to AUTHORITY adequate records of such inspections.

ARTICLE 38. SUPERINTENDENCE BY CONTRACTOR

CONTRACTOR, at all times during performance and until the work is completed and accepted, shall give its personal superintendence to the work or have on the work a competent superintendent, satisfactory to AUTHORITY and with authority to act for and on behalf of CONTRACTOR.

ARTICLE 39. OTHER CONTRACTS

AUTHORITY may undertake or award other agreements for additional work, and CONTRACTOR shall fully cooperate with such other CONTRACTOR's and AUTHORITY's employees and carefully fit its own work to such additional work as may be directed by AUTHORITY. CONTRACTOR shall not commit or permit any act, which will interfere with the performance of work by any other CONTRACTOR or by AUTHORITY.

ARTICLE 40. INSPECTION OF SITE

CONTRACTOR acknowledges that it has investigated and satisfied itself as to the conditions affecting the work including, but not restricted to, those bearing upon transportation, disposal, handling and storage of materials, availability of labor, water, electric power and roads and uncertainties of weather, river stages, tides or similar physical conditions at the site, the conformation and conditions of the ground, the character of equipment and facilities needed preliminary to and during prosecution of the work. CONTRACTOR further acknowledges that it has satisfied itself as to the character, quality and quantity of surface and subsurface materials or obstacles to be encountered insofar as this information is reasonably ascertainable from an inspection of the site, including all exploratory work done by AUTHORITY, as well as from information presented by the drawings and specifications made a part of this Agreement. Any failure by CONTRACTOR to acquaint itself with the available information will not

relieve it from responsibility for the difficulty or cost of successfully performing the work. AUTHORITY assumes no responsibility for any conclusions or interpretations made by CONTRACTOR on the basis of the information made available by AUTHORITY.

ARTICLE 41. DIFFERING SITE CONDITIONS

A. CONTRACTOR shall immediately, and before such conditions are disturbed, notify AUTHORITY in writing of: (1) subsurface or latent physical conditions at the site which differ materially from those indicated in this Agreement, or (2) unknown physical conditions at the site, of an unusual nature, which differ materially from those ordinarily encountered and generally recognized as inherent in work of the character provided for in this Agreement. AUTHORITY will investigate the conditions within three business days of receipt of notification, and if it finds that such conditions do materially so differ and cause an increase or decrease in CONTRACTOR's cost of, or the time required for, performance of any part of the work under this Agreement, whether or not changed as a result of such conditions, an equitable adjustment shall be made and the Agreement modified in writing accordingly.

B. No claim of CONTRACTOR under this Article shall be allowed unless CONTRACTOR has given the written notice required above; no claim by CONTRACTOR for an equitable adjustment hereunder shall be allowed if asserted after final payment under this Agreement.

ARTICLE 42. OPERATIONS AND STORAGE AREAS

A. All operations of CONTRACTOR (including storage of materials and equipment) on AUTHORITY owned premises shall be confined to areas authorized or approved by AUTHORITY. CONTRACTOR shall hold AUTHORITY and its officers and agents free and harmless from liability of any nature occasioned by CONTRACTOR's operations.

B. Temporary building (storage sheds, shops, offices, etc.) may be erected by CONTRACTOR with the written consent of AUTHORITY, and shall be built with labor and materials furnished by CONTRACTOR without expense to AUTHORITY. Such temporary buildings and utilities shall remain the property of CONTRACTOR and shall be removed by CONTRACTOR at its expense upon the completion of the work. With the written consent of AUTHORITY, such buildings and utilities may be

abandoned and need not be removed.

C. CONTRACTOR shall, under regulations prescribed by AUTHORITY, use only established roadways or construct and use such temporary roadways as may be authorized by AUTHORITY. Where materials are transported in the prosecution of work, vehicles shall not be loaded beyond the loading capacity recommended by the manufacturer of the vehicle or prescribed by any federal, state or local law or regulation. When it is necessary to cross curbing or sidewalks, protection against damage shall be provided by CONTRACTOR and any damaged roads, curbing or sidewalks shall be repaired by, or at the expense of, CONTRACTOR.

ARTICLE 43. PROTECTION OF VEGETATION, UTILITIES, IMPROVEMENTS

A. CONTRACTOR shall preserve and protect all existing vegetation such as trees, shrubs and grass on or adjacent to the site of work which is not to be removed and which does not unreasonably interfere with the construction work. Care will be taken in removing trees authorized for removal to avoid damage to vegetation to remain in place. Any limbs or branches of trees broken during such operations or by the careless operation of equipment, or by workmen, shall be trimmed with a clean cut and painted with an approved tree pruning compound as directed by AUTHORITY.

B. CONTRACTOR shall protect from damage all existing improvements or utilities at or near the site of the work, the location of which is made known to it, and will repair or restore any damage to such facilities resulting from failure to comply with the requirements of this Agreement or the failure to exercise reasonable care in the performance of the work. If CONTRACTOR fails or refuses to repair any such damage promptly, AUTHORITY may have the necessary work performed and charge the cost to CONTRACTOR.

ARTICLE 44. CLEANING UP

A. CONTRACTOR shall at all times keep the construction area, including storage areas used by it, free from accumulations of waste material or rubbish, and prior to completion of the work remove any rubbish from AUTHORITY owned premises and all tools, scaffolding, equipment and materials not the property of AUTHORITY. Upon completion of the construction, CONTRACTOR shall leave the work and

premises in a clean, neat and workmanlike condition satisfactory to AUTHORITY.

B. After completion of all work on the project, and before making application for acceptance of the work, CONTRACTOR shall clean the construction site, including all areas under the control of AUTHORITY, that have been used by CONTRACTOR in connection with the work on the project and remove all debris, surplus material and equipment, and all temporary construction or facilities of whatever nature, unless otherwise approved by AUTHORITY. Final acceptance of the work by AUTHORITY will be withheld until CONTRACTOR has satisfactorily complied with the foregoing requirements for final cleanup of the project site.

C. Full compensation for conforming to the provisions in this Article, not otherwise provided for, shall be considered as included in price of this Agreement and no additional compensation will be allowed therefore.

ARTICLE 45. USE AND POSSESSION TO COMPLETION

AUTHORITY shall have the right to take possession of or use any completed or partially completed part of the work. Prior to such possession or use, AUTHORITY shall furnish CONTRACTOR an itemized list of work remaining to be performed or corrected on such portions of the project as are to be possessed or used by AUTHORITY, provided that failure to list any item of work shall not relieve CONTRACTOR of responsibility for compliance with the terms of this Agreement. Such possession or use shall not be deemed an acceptance of any work under this Agreement. While AUTHORITY has such possession or use, CONTRACTOR shall be relieved of the responsibility for the loss or damage to the work resulting from AUTHORITY's possession or use. If such prior possession or use by AUTHORITY delays the progress of the work or causes additional expense to CONTRACTOR, an equitable adjustment in the Agreement price or the time of completion will be made and the Agreement shall be modified in writing accordingly.

ARTICLE 46. PROHIBITED INTERESTS

CONTRACTOR covenants that, for the term of this Agreement, no director, officer or employee of AUTHORITY, during his/her tenure in office or for one (1) year thereafter, shall have any interest, direct

or indirect, in this Agreement or the proceeds thereof.

ARTICLE 47. CONTRACTOR PURCHASED EQUIPMENT

A. If during the course of this Agreement, additional equipment is required, which will be paid for by the AUTHORITY, CONTRACTOR must request prior written authorization from the AUTHORITY's project manager before making any purchase. As part of this purchase request, CONTRACTOR shall provide a justification for the necessity of the equipment or supply and submit copies of three (3) competitive quotations. If competitive quotations are not obtained, CONTRACTOR must provide the justification for the sole source.

B. CONTRACTOR shall maintain an inventory record for each piece of equipment purchased that will be paid for by the AUTHORITY. The inventory record shall include the date acquired, total cost, serial number, model identification, and any other information or description necessary to identify said equipment or supply. A copy of the inventory record shall be submitted to the AUTHORITY upon request.

C. At the expiration or termination of this Agreement, CONTRACTOR may keep the equipment and credit AUTHORITY in an amount equal to its fair market value. Fair market value shall be determined, at CONTRACTOR's expense, on the basis of an independent appraisal. CONTRACTOR may sell the equipment at the best price obtainable and credit AUTHORITY in an amount equal to the sales price. If the equipment is to be sold, then the terms and conditions of the sale must be approved in advance by AUTHORITY's project manager.

D. Any subcontractor agreement entered into as a result of this Agreement shall contain all provisions of this clause.

ARTICLE 48. HEALTH AND SAFETY SPECIFICATIONS

CONTRACTOR shall comply with all requirements set forth in Exhibit H, Level 3 Safety Specifications.

ARTICLE 49. FORCE MAJEURE

Either party shall be excused from performing its obligations under this Agreement during the time and to the extent that it is prevented from performing by an unforeseeable cause beyond its control,

including but not limited to: any incidence of fire, flood; acts of God; commandeering of material, products, plants or facilities by the federal, state or local government; national fuel shortage; or a material act or omission by the other party; when satisfactory evidence of such cause is presented to the other party, and provided further that such nonperformance is unforeseeable, beyond the control and is not due to the fault or negligence of the party not performing.

IN WITNESS WHEREOF, the parties hereto have caused this Agreement No. C-4-2550 to be executed as of the date of the last signature below.

CONTRACTOR

By: _____

License No:

ORANGE COUNTY TRANSPORTATION AUTHORITY

By: _____
Darrell E. Johnson
Chief Executive Officer

APPROVED AS TO FORM:

By: _____
James M. Donich
General Counsel

APPROVED:

By: _____
James G. Beil, P.E.
Executive Director, Capital Programs

SECTION V: GENERAL PROVISIONS - EXHIBIT A

SECTION V: GENERAL PROVISIONS

A. COST BREAKDOWN

Within 15 calendar days after "Notice to Proceed," the Contractor shall, upon request by the Authority, submit a cost breakdown of the lump sum Bid entered on the Bid Form for all construction work. This cost breakdown will form the basis for progress payments in accordance with these Specifications and shall show all of the major categories and subcategories of work and equipment requested by the Authority. Additionally, all cost shall be segregated between off-site and on-site costs. Mobilization costs shall not exceed 10% of total construction costs. Bonds and insurance costs will be identified as a separate line item. Such cost breakdown shall not be required if the Authority, at its sole discretion, elects to pay the Contractor in lump sum within thirty (30) calendar days of receipt of proper invoice following the Contractor's satisfactory completion and the Authority's acceptance of all work.

B. PROGRESS PAYMENTS

1. The Authority, no later than the 25th day of each month, shall prepare a progress payment estimate based on the estimated percentage of completion of each Bid Item and on the Contractor's actually incurred allowable expenses on such Bid Items. The Authority will issue the progress payment, in the amount it deems appropriate, by approximately the 15th day of the following month.

2. For purposes of calculating the progress payments, Authority will use the cost breakdown submitted by the Contractor for each Bid Item at the start of this Agreement. In no event will the Authority make a progress payment that, when added to the prior progress payments, amounts to a sum more than the Contractor's actual aggregate incurred expenses, adjusted to include Contractor's overhead and profit as allocated to such incurred expenses.

3. The Authority will pay only 95% of each progress payment amount as determined above, retaining 5% as part security for the fulfillment of this Agreement by the Contractor.

4. The amount retained in accordance with paragraph B.3., hereinabove from the progress payments will be paid in full to the Contractor as part of the final payment upon Contractor's full completion of this Agreement, except that ½ of 1% of this Agreement's total price shall be retained for one (1) year beyond the date of the Notice of Completion filed for this Agreement as partial security for fulfillment of the warranty obligations by the Contractor under this Agreement.

5. No progress payments will be made for materials not installed.

6. Progress payments made by Authority in no way shall be deemed or construed as acceptance by the Authority of work or waiver by the Authority of any rights

hereunder.

7. The Contractor shall pay subcontractors, promptly upon receipt of each Authority progress payment; the respective amounts allowed the Contractor on account of the work performed by subcontractors, to the extent of each such subcontractor's interest therein. Such payments to subcontractors shall be based on estimates made pursuant to this Agreement. Any diversion by the Contractor of payments received for prosecution of a contract, or failure to reasonably account for the application or use of such payments, constitutes ground for termination of the Contractor's control over the work and for taking over the work, in addition to disciplinary action by the Contractor's State License Board. The subcontractor shall notify, in writing, the Contractor's State License Board and the Authority of any payment less than the amount or percentage approved for the class or item of work as set forth in this Agreement.

8. In addition to other amounts properly withheld under this Agreement, the Authority shall withhold all legally required sums for, but not necessarily limited to, stop notices, labor and tax liens, etc.

C. FINAL INSPECTION AND ACCEPTANCE

Promptly after Substantial Completion has occurred, Contractor shall perform all Punch List Work, if any, which was deferred for purposes of Project Completion, and shall satisfy all of its other contractual obligations under the contract documents.

When the Contractor determines that the work is fully completed, including satisfactory completion of all inspections, tests, and required documentation, Punch List and clean-up items, Contractor shall give the Authority a written request for Final Acceptance within ten (10) days thereafter, specifying that the work is completed and the date on which it was completed.

Within thirty (30) days after receipt of the request for Final Acceptance from Contractor, Authority will make a final inspection of the work and will either:

1. Reject the request for Final Acceptance, specifying the defective or uncompleted work; or

2. Issue a written Final Acceptance and record Notice of Completion with County Recorder.

Substantial Completion is defined herein as; In the opinion of the Authority, that Work or portion thereof that is sufficiently complete and in accordance with the Contract, that it can be utilized by the Authority for the purpose for which it was intended. A determination of Substantial Completion does not waive, but may not require the prior completion of minor items, which do not impair the Authority's ability to safely occupy and utilize the Work for its intended purpose.

D. CLAIMS

Contractor is required to submit a written claim within ten (10) days after the event or occurrence first giving rise to the potential claim, or in the event of a denial of a request for change by the Authority. All claims shall include a detailed factual statement; including names, dates and specific events that took place. In addition, all claims shall include supporting documents in support of the claim, a detailed analysis of a request for a time extension, if applicable, and a detailed breakdown of a request for additional compensation. A revised construction schedule shall also be included identifying the impact of the delays, including proposals to minimize any of the impacts.

Authority shall respond in writing to a claim within forty-five (45) days of receipt of claim. Within thirty (30) days of receipt of claim, Authority, if necessary, may request additional documentation in support of said claim. If additional documentation is requested, Authority shall respond in writing to the claim within fifteen (15) days after receipt of additional documentation.

Claims filed by the Contractor shall be in sufficient detail to enable the Authority to ascertain the basis and amount of said claims. The Authority will consider and determine the Contractor's claims, and it will be the responsibility of the Contractor to furnish within a reasonable time such further information and details as may be required by the Authority to determine the facts or contentions involved in its claims. Failure to submit such information and details will be sufficient cause for denying the claim.

Claims submitted by the Contractor shall be accompanied by a notarized certificate containing the language listed below. Failure to submit the notarized certificate will be cause for denying the claim.

Certificate

Under the penalty of law for perjury or falsification with specific reference to the California False Claims Act, Government Code Section 12650 et. Seq., the undersigned,

_____
(Name)

_____
(Title)

_____
(Company)

herby certifies that the claim for the additional compensation and time, if any, made herein for the work on this Contract is a true statement of the actual cost incurred and time sough, and is fully documented and supported under the Contract between the parties

Dated: _____

Signature: _____

Subscribed and sworn before this _____ day of _____ , 202__
_____ .

_____
Notary Public

My Commission Expires: _____

E. FINAL PAYMENT

1. After the filing of the Notice of Completion, the Authority will make a proposed final estimate, in writing, of the total amount payable to the Contractor, including therein an itemization of said amount, segregated as to contract item quantities, extra work and any other basis for payment, and shall also show therein all deductions made or to be made for prior payments and amounts to be kept or retained under the provisions of the contract. All prior estimates and payments shall be subject to correction in the proposed final estimate. Within 15 days after proposed final estimate has been submitted, Contractor shall submit to the Authority written approval of proposed final estimate and/or a written statement of all claims of the contract. No claim will be considered that was not included in written statement of claims, nor will any claim be allowed unless the Contractor has previously complied with the notice and protest requirements.

2. On the Contractor's approval, or if he files no claim within stated period,

Authority will issue a final written estimate, in accordance with the proposed final estimate submitted to the Contractor; and 35 days after the date of filing the Notice of Completion Authority will pay the entire sum found to be due. Such final estimate and payment thereon shall be conclusive and binding against the Contractor on all questions relating to the amount of work done and the compensation payable therefore, except as otherwise provided.

3. If the Contractor within said period of 15 days files claims, Authority will issue a semi-final estimate in lieu of the final estimate submitted to the Contractor; and 35 days after the date of filing of the Notice of Completion, the Authority will pay the sum found to be due. Such semi-final estimate and payment thereon shall be conclusive and binding against the Contractor on all questions relating to the amount of work done and the compensation payable therefore, except insofar as affected by the claims filed within the time and in the manner required hereunder and except as otherwise provided.

4. Upon final determination of any outstanding claims, the Authority shall then make and issue a final estimate in writing and within 30 days thereafter, the Authority will pay the entire sum, if any, found due. Such final estimate shall be conclusive and binding against the Contractor on all questions relating to the amount of work done and the compensation payable therefore, except as otherwise provided.

F. EXTRA WORK AND CHANGES

1. New and unforeseen work, which in the judgment of the Authority is found necessary or desirable for the satisfactory completion of the work, will be classified as extra work, as well as work specifically designated as such in the plans or specifications. The Contractor shall do such extra work and furnish material and equipment therefore as directed by the Engineer in writing by a change order. No extra work will be paid for or allowed unless the same was done upon written change order of the Engineer and after all legal requirements have been complied with.

   The Contractor agrees that he will accept as full compensation for any extra work or changes in the work, so ordered, an amount to be determined by one of the following methods:

   a. A price mutually agreed upon in writing by the Engineer and Contractor (hereafter Agreed Price).

   b. Force Account as hereafter provided.

   All compensation for extra work or changes in the work will be provided through a written change order. Nothing herein shall excuse the Contractor from proceeding with the work as otherwise directed by the Agreement.

2. It is mutually agreed that on the agreed price, the Contractor and subcontractor(s) shall add not more than a total markup of 20% to be divided between the Contractor and subcontractor(s) as full compensation for all other expenses including overhead, profit, bond, superintendence, insurance and small tools.

3. When extra work is to be paid for on a force account basis, compensation will be determined as follows:

a. Materials

A sum equal to the actual cost to the Contractor of the materials furnished by him, as shown by paid receipts, plus not more than fifteen percent (15%). Only installed materials shall be paid for.

b. Labor

1. The actual wages paid as shown on the certified copies of Contractor's payroll, for all labor directly engaged in the work and including the cost of any compensation insurance paid for by the Contractor, subsistence and travel allowance aid to such workmen as required by collective bargaining agreements plus not more than twenty percent (20%).

2. To the actual wages as described in 1 above will be added a labor surcharge of not more than seventeen percent (17%), and shall constitute full compensation for all other payments, including payments imposed by State and Federal laws.

c. Equipment

1. Equipment will be paid for as a rental charge whether owned by the Contractor or not, and said rental rates prevailing in the area for comparable equipment will be paid. To the direct costs of "Equipment Rental" will be added a not more than fifteen percent (15%) markup.

2. All extra work at Force Account shall be adjusted daily upon report sheets prepared by the Engineer, furnished to the Contractor and signed by both parties. Said daily reports shall thereafter be considered the true record of all extra work done. The decision of the Engineer as to whether extra work has in fact been performed shall be conclusive and binding upon both parties to the contract.

4. A contract change order approved by Authority may be issued to the Contractor at any time. Should the Contractor disagree with any terms or conditions set forth in the contract change order, the Contractor shall submit a written protest to the Authority within 15 days after the receipt of the contract change order.

The protest shall state the points of disagreement and, if possible, the contract specification references, quantities and costs involved. If a written protest is not submitted within the above period, payment will be made as set forth in the approved contract change order and such payment shall constitute full compensation for all work included therein or required thereby. Such unprotested approved contract change orders will be considered as executed contract change orders.

5. Contractor shall promptly notify the Authority in writing when it receives direction, instruction, interpretation or determination from any source other than the Authority or its designated representatives that may lead to or cause change in the work. Such written notification shall be give to the Authority before the Contractor acts on said direction, instruction, interpretation or determination.

G. EXTENDED FIELD OFFICE OVERHEAD COSTS

1. Within thirty (30) days after receipt of the Notice to Proceed, the Contractor shall submit a written statement to the Authority detailing its field office overhead costs which are time related. The Authority will review this cost submittal and reach a written agreement with the Contractor on a daily field office overhead cost rate which shall be issued as an agreed upon Change Order. The daily rate agreed to in this Change Order will be applicable throughout the duration of the Contract. No field office costs will be paid until such agreement is reached between the Authority and the Contractor and the Change Order concerning this daily rate is executed by both parties.

2. The individual cost components of the daily field office overhead rate shall represent costs which increase as a direct result of any time extension caused solely and exclusively by an act of the Authority. This listing may include such cost items as on-site project management, supervision, engineering and clerical salaries; on-site office utilities and rent; on-site company vehicles and their operating expenses; and site maintenance and security expenses. Field office overhead costs which are unaffected by increased time shall not be allowable costs in calculating the daily field office overhead rate. These non-time related costs include, but are not limited to, acquisition and installation of stationary equipment; temporary construction facilities; utilities and office furnishings (unless such items are rented or leased); the preparation of the site including clearing, grubbing, grading and fencing; mobilization and demobilization costs; and the costs of permits, bonds and insurance coverage for the project.

3. The individual wage cost components used to calculate the daily field office overhead rate shall be supported by actual employee payroll

records, not salary ranges or estimates. Hourly rates for management, supervisory, engineering and clerical employees shall be based upon 2,080 work hours per year and shall not include allowances for holidays, vacation or sick time. However, the daily field office overhead rate shall only reflect the actual on-site time required in the field office. All other field office overhead cost components shall be evidenced by records demonstrating actual field office costs incurred by the Contractor.

4. The daily field office overhead rate shall be multiplied by the number of days the Contract is delayed or extended by Change Order and shall be added to the agreed upon Change Order cost. The days of delay shall be those caused solely by action of the Authority and documented by a time impact analysis prepared and submitted by the Contractor. In the event of a deductive Change Order is issued which reduces time under the Contract, the daily field office overhead rate shall be added to the deductive amount. No allowance for overhead costs and no profit allowance shall be added to the extended field office overhead cost.

H. ACCELERATION

1. Authority reserves the right to accelerate the work of the Contract at any time during its performance. In the event that the Authority directs acceleration, such directive will be given to the Contractor in writing. The Contractor shall keep cost and other Project records related to the acceleration directive separately from normal Project cost records and shall provide a written record of acceleration costs to the Authority on a daily basis.

2. In the event that the Contractor believes that some action or inaction on the part of the Authority constitutes an acceleration directive, the Contractor shall immediately notify the Authority in writing that the Contractor considers the actions or inactions an acceleration directive. This written notification shall detail the circumstances of the acceleration directive. The Contractor shall not accelerate their work efforts until the Authority responds to the written notification. If acceleration is then directed or required by the Authority, all cost records referred to in section (1) shall be maintained by the Contractor and provided to the Authority on a daily basis.

3. In order to recover additional costs due to acceleration, the Contractor must document that additional expenses were incurred and paid by the Contractor. Labor costs recoverable will only be overtime or shift premium costs or the cost of additional laborers brought to the site to accomplish the accelerated work effort. Equipment costs recoverable will only be the cost of added equipment mobilized to the site to accomplish the accelerated work effort.

I. VALUE ENGINEERING

Authority encourages the Contractor to submit Value Engineering Proposals (VEP's) whenever it identifies areas and/or instances in which improvements can be made, in order to avail the Authority of potential cost savings. Contractor and the Authority will share any savings in the manner described below.

A VEP applies to a Contractor developed and documented VEP that:

1. Requires a change to the contract.

2. Reduces the total contract price without impairing essential functions or characteristics of the work.

3. Results in an estimated total net savings to the Authority equal to or greater than $1,000.

At a minimum, a VEP should include the following information:

1. A description of the existing contract requirements that are involved in the proposed change.

2. A description of the proposed change, and all specifications and/or plans necessary for the complete evaluation of the proposed change. Include a discussion of the differences between existing requirements and the proposed change, together with advantages and disadvantages of each changed item. All relevant back up documentation needs to be included to support proposed changes.

3. Cost estimate for existing contract requirements correlated to the Contractors lump sum breakdown and the proposed changes in those requirements, including costs of development and implementation by the Contractor.

Contractor shall submit the VEP to the Authority. At its sole discretion, Authority may accept, in whole or in part and by change order, any VEP submitted pursuant to this section. Until a change order is issued on a VEP, Contractor shall remain obligated to perform in accordance with the contract. The decision of the Authority as to the rejection or acceptance of a VEP shall be at the sole discretion of the Authority.

If a VEP, submitted by the Contractor pursuant to this section is accepted by the Authority, the total contract price shall be adjusted based upon a sharing of the net savings by the Contractor and the Authority (50% Authority, 50% Contactor). Contractor's profit shall not be reduced by application of the VEP.

Net savings are defined as gross savings less the Contractor's costs and less the Authority's costs.

1. Contractors cost means reasonable costs incurred by the Contractor in preparing the VEP and making the change.

2. Authority's costs means reasonable costs incurred by the Authority for evaluating and implementing the VEP.

3. Contractor is not entitled to share in either concurrent, collateral or future contract savings. Collateral savings are those measurable net reductions in the Authority's costs of operation that result from the VEP. Concurrent savings cover the reductions in the cost of performance of other contracts.

Contractor shall include appropriate VEP provisions in all subcontracts greater than $25,000.

J. STOP NOTICES

The Authority, at its sole discretion, may, at any time, retain out of any amounts due the Contractor, sums sufficient to cover claims filed pursuant to Section 9358 et. seq. of the California Civil Code.

K. ORDER OF WORK

Contractor shall perform work hereunder at such places, and in such order or precedence, as may be determined necessary by the Engineer to expedite completion of the required work.

L. LABOR PROVISIONS

1. Prevailing Wages

   Contractor shall comply with all applicable requirements of Division 2, Part 7, Chapter 1 of the Labor Code and all applicable federal requirements respecting prevailing wages. If there is a difference between the minimum wage rates predetermined by the Secretary of Labor and the wage rates determined by the Director of the Department of Industrial Relations (DIR) for similar classifications of labor, the Contractor and subcontractors shall not pay less than the higher wage rate. The DIR will not accept lower state wage rates not specifically included in the Federal minimum wage determination.

2. Minimum Wages

   a. All mechanics and laborers employed or working upon the site of the work will be paid unconditionally, and not less often than once a week and without subsequent deduction or rebate on any account, the full amounts due at time of payment computed at wage rates not less than those specified in the General Wage Determinations referenced in this section regardless of any contractual relationship which may be alleged to exist between the Contractor and such laborers and mechanics; and the wage determination decision shall be posted by the Contractor at the site of the work in a prominent place where it can be easily seen by the workers. For the purpose of this clause, contributions made or cost reasonably anticipated under the Labor Code of the State of California on behalf of laborers or

mechanics are considered wages paid by such Laborers or mechanics. Also for the purpose of this clause, regular contributions made or costs incurred for more than a weekly period under plans, funds or programs, but covering the particular weekly period, are deemed to be constructively made or incurred during such weekly period.

b. Authority shall require that any class of laborers or mechanics, including apprentices and trainees, which is not listed in the General Wage Determinations and which is to be employed under this Contract, shall be classified conformably to such wage determinations. In the event the Authority does not concur in the Contractor's proposed classification or reclassification of a particular class of laborers and mechanics (including apprentices and trainees) to be used, the question, accompanied by the recommendation of the Authority, shall be referred to the State Director of Industrial Relations for determination.

c. Authority shall require, whenever the minimum wage rate prescribed in the contract for a class of laborers or mechanics includes a fringe benefit which is not expressed as an hourly wage and the Contractor is obligated to pay a cash equivalent of such a fringe benefit, an hourly cash equivalent thereof to be established. In the event the interested parties cannot agree upon cash equivalent of the fringe benefit, the questions, accompanied by the recommendation of the Authority, shall be referred to the State Director of Industrial Relations for determination.

d. All disputes concerning the payment of wages or the classification of workers under this Agreement shall be promptly reported to the Authority.

3. Deductions

Authority may deduct from each progress payment and the Final Payment the following:

a. Any Authority or third party claims or losses for which Contractor is responsible hereunder or any Liquidated Damages which have accrued as of the date of the application for payment;

b. If a notice to stop payment is filed with Authority, due to the Contractor’s failure to pay for labor or materials used in the work, money due for such labor or materials, plus the 25% prescribed by law, will be withheld from payment to the Contractor. In accordance with Section 9358 of the Civil Code, Authority may accept a bond by a corporate surety in lieu of withholding payment;

c. Any sums expended by or owing to Authority as a result of Contractor’s failure to maintain the as-built drawings;

d. Any sums expended by Authority in performing any of the Contractor's obligations under the Contract which Contractor has failed to perform; and

e. Any other sums which Authority is entitled to recover from Contractor under the terms of the Contract.

The failure by Authority to deduct any of these sums from a progress payment shall not constitute a waiver of Authority's right to such sums.

All amounts owing by Contractor to Authority under the Contract shall earn interest from the date on which such amount is owing at the lesser of (i) 10% per annum or (ii) the maximum rate allowable under applicable Governmental Rules.

4. Payrolls and Basic Records

a. Payrolls and basic records relating thereto will be maintained during the course of the work and preserved for a period of three (3) years thereafter for all laborers and mechanics working at the site of the work. Such records will contain the name, address and social security number of each such worker, the correct classification, rates of pay, daily and weekly number of hours worked, deductions made and actual wages paid.

b. Contractor will submit weekly a copy of all payrolls to the Authority as required in these "Labor Provisions." The copy shall be accompanied by a statement signed by the employer or its agent indicating that the payrolls are correct and complete, that the wage rates contained therein are not less than those determined by the State Director of Industrial Relations and that the classifications as set forth for each laborer or mechanic conform to the work performed. A submission of the "Weekly Statement of Compliance," which is required under this Contract, shall satisfy this requirement. The prime Contractor shall be responsible for the submission of copies of payrolls of all subcontractors. The Contractor will make the records required under the labor standard clauses of the contract available for the inspection by authorized representatives of the Authority, and will permit such representatives to interview employees during working hours on the job.

5. Apprentices and Trainees

a. Apprentices: Apprentices will be permitted to work at less than the predetermined rate for the work they perform when they are employed and individually registered in a bona fide apprenticeship program as defined in section 1777.5 of the Labor Code of the State of California. The allowable

ratio of apprentices to journeymen in any craft classification shall not be greater than the ratio permitted to the Contractor as to his entire work force under the registered program. Any employee listed on a payroll at an apprentice wage rate who is not registered or otherwise employed as stated above, shall be paid the wage rate determined by the State Director of Industrial Relations for the classification of work he actually performed. The Contractor or subcontractor will be required to furnish to the Authority or the State Director of Industrial Relations written evidence of the registration of his program and apprentices as well as the appropriate ratios and wage rates (expressed in percentages of the journeyman's rate contained in the applicable wage determination).

b. Trainees: Except as provided in 29 CFR 5.15, trainees will not be permitted to work at less than the predetermined rate for the work performed unless they are employed pursuant to or individually registered in a program which has received prior approval, evidenced by formal certification, by the U.S. Department of Labor, Employment and Training Administration, Bureau of Apprenticeship and Training. The ratio of trainees to journeymen shall not be greater than that permitted under the plan approved by the Bureau of Apprenticeship and Training. Every trainee must be paid at not less than the rate specified in the approved program for his level of progress. Any employee listed on the payroll at a trainee rate who is not registered and participating in a training plan approved by the Bureau of Apprenticeship and Training shall be paid not less than the wage rate determined by the Secretary of Labor for the classification of work he actually performed. The Contractor or subcontractor will be required to furnish the contracting officer or a representative of the Wage-Hour Division of the U.S. Department of Labor written evidence of the certification of his program, the registration of the trainees, and the ratios and wage rates prescribed in that program. In the event the Bureau of Apprenticeship and Training withdraws approval of a training program, the Contractor will no longer be permitted to utilize trainees at less than the applicable predetermined rate for the work performed until an acceptable program is approved.

c. Equal Employment Opportunity: The utilization of apprentices and journeymen under this part shall be in conformity with the equal employment opportunity requirements of Executive Order 11246, as amended, 29 CFR Part 30, and 41 CFR Part 60.

6. Compliance With Copeland Regulations (29 CFR Part 3)

The Contractor shall comply with the Copeland “Anti-Kickback” Act (18 U.S.C. 874 and 40 U.S.C. 276c). The Contractor shall also comply with the Copeland Regulations (29 CFR Part 3) of the Secretary or Labor which are herein incorporated by reference.

7. Contract Termination; Debarment

   A breach of item 1 through 6 may be grounds for termination of the contract, and for debarment as provided in 29 CFR Section 5.6.

8. Overtime Requirements

   No Contractor or subcontractor contracting for any part of the contract work which may require or involve the employment of laborers or mechanics shall require or permit any laborer or mechanic in any work week in which he is employed on such work to work in excess of 8 hours a day or 40 hours in such work week unless such laborer or mechanic receives compensation at a rate not less than one and one-half times the basic rate of pay for all hours worked in excess of 8 hours a day or 40 hours in such work week.

9. Violation; Liability for Unpaid Wages

   Pursuant to section 1775 of the Labor Code of the State of California, in the event that any workman employed on this public works project is paid less than the amount specified in the General Prevailing Wage Determinations or less than is required, relative to overtime, the Contractor and any subcontractor responsible therefore shall be liable to the affected workman for the unpaid wages. In addition, such Contractor and subcontractor shall be liable to the State of California or the Authority for liquidated damages. Such liquidated damages shall be computed with respect to each individual workman found to be underpaid and shall be in the amount of $50 per calendar day that a workman was underpaid.

10. Withholding for Liquidated Damages

    The Authority may withhold or cause to be withheld, from any monies payable on account of work performed by the Contractor or subcontractor, such sums as may administratively be determined to be necessary to satisfy any liabilities of such Contractor or subcontractor for liquidated damages as provided in this section.

11. Final Labor Summary

    The Contractor and each subcontractor shall furnish to the Authority, upon the completion of the contract, a summary of all employment, indicating for the completed project, the total hours worked and the total amount earned.

12. Final Certificate

Upon completion of the contract, the Contractor shall submit to the Authority, with the voucher for a final payment for any work performed under the contract, a concerning wages and classifications for laborers and mechanics, including apprentices and trainees employed on the project, in the following form:

The undersigned, Contractor on

_____
(Contract No.)

hereby certifies that all laborers, mechanics, apprentices and trainees employed by the Contractor or by a subcontractor performing work under the contract on the project have been paid wages at rates not less than those required by the contract provisions, and that the work performed by each such laborer, mechanic, apprentice or trainee conformed to the classifications set forth in the contract or training program provisions applicable to the wage rate paid.

_____
Signature and Title

13. Notice to the Authority of Labor Dispute

Whenever the Contractor has knowledge that any actual or potential labor dispute is delaying or threatens to delay the timely performance of this contract, the Contractor shall immediately give notice thereof, including all relevant information with respect thereto, to the Authority.

14. Disputes Clause

a. All disputes concerning the payment of prevailing wage rates or classifications shall be promptly reported to the Authority for its referral to DOT for decision or, at the option of the Authority, DOT referral to the Secretary of Labor. The decision of DOT or the Secretary of Labor, as the case may be, shall be final.

b. All questions relating to the application or interpretation of the Copeland Act, the Contract Work Hours Standards Act, the Davis-Bacon Act, or Section 13 of the Act shall be sent to the Federal Transit Administration (FTA) for referral to the Secretary of Labor for ruling or interpretation, and such ruling or interpretation shall be final.

15. Convict Labor

In connection with the performance of work under this Contract, the Contractor agrees not to employ any person-undergoing sentence of

imprisonment at hard labor. This does not include convicts who are on parole or probation.

16. Insertion in Subcontracts

The Contractor shall set forth in item 1 through 15 of this Section so that all of the provisions of this section will be inserted in all construction subcontracts of any tier, and such other clauses as the Government may by appropriate instructions require.

17. Certified Payrolls

a. The Authority shall obtain from the Contractor and each subcontractor a certified copy of each weekly payroll within seven (7) days after the regular payroll date. Following a review by the Authority for compliance with State and Federal labor laws, the payroll copy shall be retained at the project site for later review by FTA.

b. Contractor may use the Department of Labor Form WH-347, "Optional Payroll Form," which provides for all the necessary payroll information and certifications.

c. If, on or before the 20th of the month, the Contractor has not submitted satisfactory payrolls covering its work and the work of all subcontractors for all payroll periods ending on or before the 6th of that month, such payrolls will be considered to be delinquent. Regardless of the number of delinquent payrolls, an amount equal to 10% (but not less than $1,000 or more than $10,000) shall be deducted from the estimate. Deductions will be made separately for each estimate period in which a new delinquency appears and will be continued until payrolls have been submitted.

d. Contractors employing apprentices or trainees under approved programs shall include a notation on the first weekly certified payrolls submitted to the Authority that their employment is pursuant to an approved program and shall identify the program.

M. TIME EXTENSION/DELAYS

a. Contractor may be granted an extension of time for any portion of a delay in completion of the work due to acts of God, the public enemy, wars, civil unrest, fires, quarantine restrictions, or weather more severe than normal, providing that (1) the aforesaid causes were not foreseeable and did not result from an act or omission by the Contractor, (2) Contractor has taken reasonable precautions to prevent further delays owing to such causes, and (3) Contractor notifies Authority in writing of the cause(s) for the delay within

ten (10) days from the beginning of any such delay. No claims for additional compensation or damages for the foregoing delays shall be allowed to the Contractor, and the extension of time provided for herein shall be the sole remedy of the Contractor on account of any such delays.

b. An extension of time will not be granted for a delay described in the above paragraph(s) caused by a shortage of materials, except if materials are furnished by Authority, unless the Contractor supplies the Authority with documented proof that every effort to obtain the materials from all known sources that (a) such materials could have been obtained only at exorbitant prices or (b) the prices were entirely inconsistent with current rates, taking into account the quantities; and (c) such facts could not have been known or anticipated at the time the Notice To Proceed was issued. Contractor shall also submit proof, that the inability to obtain such materials when originally planned, did in fact, cause a delay in completion of the work that could not be compensated for by revising the sequence of its operations. Only the physical shortage of material will be considered as a basis for an extension of time.

c. An extension of time for weather more severe than normal shall be granted only to the extent the work is actually delayed as determined by the Authority. Normal is defined as the monthly average of the temperature and rainfall wherein the work was performed for the prior 20 years before the execution of the contract.

d. In the event Contractor is actually and necessarily delayed by an act or omission on the part of the Authority, as determined by the Authority, the Contractor shall notify the Authority in writing within five (5) days from the beginning of any such delay. The time for completion of the work may be extended at the sole discretion of the Authority.

e. Within 30 days after the last day of delay, Contractor shall provide Authority with detailed information concerning the circumstances of the delay, the number of days actually delayed, and the measures taken to minimize or prevent the delay. Failure to submit information shall be sufficient reason to deny the claim. Authority shall ascertain the facts and the extent of the delay; and provide the Contractor its written findings, which will be final and conclusive. Except for the additional compensation for herein and except as provided in Public Contract Code Section 7102, Contractor shall have no claim for damages or compensation for any delay or hindrance.

f. No extension of time will be granted for any Authority caused delay or delay as defined in which (a) the performance of work would have been concurrently delayed by Contractor induced causes, including but not limited to an act or omission of the Contractor, or (b) remedies are included or excluded by any other contract provision. Only the actual delay necessarily resulting from the causes specified in this Article shall be

grounds for extension of time. Should the Contractor be delayed at any time for any period by two or more of the causes specified in this article, Contractor shall only be entitled to one time extension for the entire delay.

g. Any time extension granted to Contractor shall not release the Contractor or surety from its obligations. Work shall continue and be carried on in accordance with the contract provisions, unless formally suspended or terminated by the Authority.

N. NONDISCRIMINATION

During the performance of this Contract, the Contractor agrees as follows:

1. The Contractor will not discriminate against any employee or applicant for employment because of race, creed, color or national origin. The Contractor will take affirmative action to ensure that applicants are employed, and that employees are treated during employment without regard to their race, religion, color, sex or national origin. Such action shall include, but not be limited to employment; upgrading; demotion; transfer; recruitment or recruitment advertising; layoff; termination; rates of pay or other forms of compensation; and selection for training, including apprenticeship. The Contractor agrees to post, in conspicuous places available to the employees and applicants for employment, notices to be provided setting forth the provisions of this nondiscrimination clause.

2. The Contractor will, in all solicitations or advertisements for employees placed by or on behalf of the Contractor, state that all qualified applicants will receive consideration for employment without regard to race, religion, color, sex or national origin.

3. The Contractor will send to each labor union or representative of workers with which it has a collective bargaining agreement or other contract or understanding, a notice to be provided advising the said labor union or workers' representatives of the Contractor's commitments under this Section, and shall post copies of the notice in conspicuous places available to employees and applicants for employment.

4. The Contractor will comply with all provisions of Executive Order 11246 of September 24, 1965, and of the rules, regulations and relevant orders of the Secretary of Labor. The Contractor will furnish all information and reports required by Executive Order 11246 of September 24, 1965, and by rules, regulations and orders of the Secretary of Labor, or pursuant thereto, and will permit access to his books, records and accounts by the administering agency and the Secretary of Labor for purposes of investigation to ascertain compliance with such rules, regulations and orders.

5. In the event of the Contractor's noncompliance with the nondiscrimination

clauses of this Contract or with any of the said rules, regulations or orders, this Contract may be canceled, terminated or suspended in whole or in part, and the Contractor may be declared ineligible for further Government contracts or Federally assisted construction contracts in accordance with procedures authorized in Executive Order 11246 of September 24, 1965, and such other sanctions may be imposed and remedies invoked as provided in Executive Order 11246 of September 24, 1965, or by rule, regulation or order, of the Secretary of Labor, or as otherwise provided by law.

6. The Contractor will include the provisions of this Paragraph ("Nondiscrimination") in every subcontract or purchase order entered into under this Agreement unless exempted by rules, regulations or orders of the Secretary of Labor issued pursuant to Section 204 of Executive Order 11246 of September 24, 1965, so that such provisions will be binding upon each subcontractor or vendor. The Contractor will take such action with respect to any subcontract or purchase order as the administering agency may direct as a means of enforcing such provisions, including sanctions for noncompliance provided, however, that in the event a Contractor becomes involved in, or is threatened with, litigation with a subcontractor or vendor as a result of such direction by the administering agency, the Contractor may request the United States to enter into such litigation to protect the interests of the United States.

7. No person employed on the work covered by this Agreement shall be discharged or in any way discriminated against because he has filed any complaints or instituted or caused to be instituted any proceeding or has testified or is about to testify in any proceeding under or relating to the labor standards applicable hereunder to his employer.

O. TITLE VI OF THE CIVIL RIGHTS ACT OF 1964

Contractor agrees to comply with and ensure compliance by all subcontractors with all requirements of Title VI of the Civil Rights Act of 1964, as amended, 42 U.S.C. §2000d; 49 U.S.C. §5332 and Department of Transportation Regulations, “Nondiscrimination in Federally-Assisted Programs of the Department of Transportation-Effectuation of Title VI of the Civil Rights Act,” 49 CFR Part 21.

P. AFFIRMATIVE ACTION

Contractors and subcontractors holding a value of work of $10,000 or more must submit a Monthly Employment Utilization Report (Form 257) to the Authority Engineer by the 5th of each month or sanctions shall be applied for late submittal, non-submittal and incomplete forms returned to the Contractor and resubmitted after the due date.

The reporting period shall be for each calendar month.

The report shall include the information requested for each Contractor's aggregate work force (for all workers on all projects within Orange County) and not just for workers on this project.

If the form is not received by the 5th of the month, a deduction of 10% (with a minimum of $1,000 and a maximum of $10,000) will be withheld from the monthly estimate at the option of the Authority.

The Contractor shall designate an Equal Employment Officer for the project and notify the Authority in writing whom that person is prior to beginning of work. All workers shall also be informed who the EEO Officer is.

Q. STANDARD FEDERAL EQUAL EMPLOYMENT OPPORTUNITY CONSTRUCTION CONTRACT SPECIFICATIONS (EXECUTIVE ORDER 11246)

1. As used in these specifications:

   a. "Covered area" means the geographical area described in the solicitation from which this Contract resulted;

   b. "Director" means Director, Office of Federal Contract Compliance Programs, United States Department of Labor, or any person to whom the Director delegates Authority;

   c. "Employer identification number" means the Federal Social Security number used on the Employer's Quarterly Federal Tax Return, U.S. Treasury Department Form 941;

   d. "Minority" includes persons who are citizens or lawful permanent residents of the United States and are one of the following:

      1) Black (all persons having origins in any of the Black African racial groups not of Hispanic origin);

      2) Hispanic (all persons of Mexican, Puerto Rican, Cuban, Central or South American, Portuguese American or other Spanish culture or origin, regardless of race);

      3) Asian and Pacific Islanders (all persons having origins in any of the original peoples of the Far East, Southeast Asia, the Indian subcontinent or the Pacific Islands);

      4) American Indians and Alaskan Native (all persons having origins in any of the original peoples of North America and maintaining identifiable tribal affiliations through membership and participation or community identification);

      5) Women regardless of ethnicity.

2. In order for the nonworking training hours of apprentices to be counted in meeting the goals, such apprentices must be employed by the Contractor during the apprenticeship period, and the Contractor must have made a commitment to employ the apprentices at the completion of their training, subject to the availability of employment opportunities. Trainees must be trained pursuant to training programs approved by the U.S. Department of Labor.

3. The Contractor shall take specific affirmative actions to ensure equal employment opportunity. The evaluation of the Contractor's compliance with these specifications shall be based upon its effort to achieve maximum results from its actions. The Contractor shall document these efforts fully, and shall implement affirmative action steps at least as extensive as the following:

    a. Ensure and maintain a working environment free of harassment, intimidation and coercion at all sites, and in all facilities at which the Contractor's employees are assigned to work. The Contractor, where possible, will assign two or more women to each construction project. The Contractor shall specifically ensure that all foremen, superintendents and other on-site supervisory personnel are aware of and carry out the Contractor's obligation to maintain such a working environment, with specific attention to minority or female individuals working at such sites or in such facilities.

    b. Establish and maintain a current list of disadvantaged and female recruitment sources, provide written notification to minority and female recruitment sources and to community organizations when the Contractor or its unions have employment opportunities available, and maintain a record of the organization's responses.

    c. Maintain a current file of the names, addresses and telephone numbers of each minority and female off-the-street applicant and disadvantaged or female referral from a union, a recruitment source or community organization and of what action was taken with respect to each such individual. If such individual was sent to the union hiring hall for referral and was not referred back to the Contractor by the union or, if referred, not employed by the Contractor, this shall be documented in the file with the reason therefore, along with whatever additional actions the Contractor may have taken.

    d. Provide immediate written notification to the Director when the union or unions with which the Contractor has a collective bargaining agreement has not referred to the Contractor a disadvantaged person or woman sent by the Contractor, or when the Contractor has other information that the union referral process has impeded the Contractor's efforts to meet its obligations.

e. Develop on-the-site-training opportunities and/or participate in training programs for the area which expressly include minority and women, including upgrading programs and apprenticeship and trainee programs relevant to the Contractor's employment needs, especially those programs funded or approved by the Department of Labor. The Contractor shall provide notice of these programs to the sources compiled under 3.b. above.

f. Disseminate the Contractor's EEO policy by providing notice of the policy to unions and training programs and requesting their cooperation in assisting the Contractor in meeting its EEO obligations; by including it in any policy manual and collective bargaining agreement; by publicizing it in the company newspaper, annual report, etc.; by specific review of the policy with all management personnel and with all minority and female employees at least once a year; and by posting the company EEO policy on bulletin boards accessible to all employees at each location where construction work is performed.

g. Review, at least annually, the company's EEO policy and affirmative action obligations under these specifications with all employees having any responsibility for hiring, assignment, layoff, termination or other employment decisions including specific review of these items with on-site supervisory personnel such as Superintendents, General Foreman, etc., prior to the initiation of construction work at any job site. A written record shall be made and maintained identifying the time and place of these meetings, persons attending, subject matter discussed and disposition of the subject matter.

h. Disseminate the Contractor's EEO policy externally by including it in any advertising in the news media, specifically including minority and female news media, and providing written notification to and discussing the Contractor's EEO policy with other Contractors and subcontractors with whom the Contractor does or anticipates doing business.

i. Direct its recruitment efforts, both oral and written, to minority, female and community organizations, to schools with minority and female students and to minority and female recruitment and training organizations serving the Contractors' recruitment area and employment needs. Not later than one month prior to the date of the acceptance of applications for apprenticeship or other training by any recruitment source, the Contractor shall send written notification to organizations such as the above, describing the opening, screening, procedures and tests to be used in the selection process.

j. Encourage present minority and female employees to recruit other minority persons and women and, where reasonable, provide after school, summer and vacation employment to minority and female youth both on the site and in other areas of Contractor's work force.

k. Validate all tests and other selection requirements where there is an obligation to do so under 41 C.F.R., Part 60-3.

l. Conduct, at least annually, an inventory and evaluation of all minority and female personnel for promotional opportunities, and encourage these employees to seek or to prepare for, through appropriate training, etc., such opportunities.

m. Ensure that seniority practices, job classifications, working assignments and other personnel practices, do not have a discriminatory effect by continually monitoring all personnel and employment related activities to ensure that the EEO policy and the Contractor's obligations under these specifications are being carried out.

n. Ensure that all facilities and company activities are non-segregated except that separate or single-user toilet and necessary changing facilities shall be provided to assure privacy between the sexes.

o. Document and maintain a record of all solicitations or offers for subcontracts from disadvantaged and female construction Contractors and suppliers, including circulation of solicitations, to disadvantaged and female Contractor associations and other business associations.

p. Conduct a review, at least annually, of all supervisors' adherence to and performance under the Contractor's EEO policies and affirmative action obligations.

4. Contractors are encouraged to participate in voluntary associations, which assist in fulfilling one or more of their affirmative action obligations (3. (a) through (p)). The efforts of a Contractor association, joint Contractor-union, Contractor-community, or other similar group of which the Contractor is a member and participant, may be asserted as fulfilling any one or more of its obligations under 3. (a) through (p) of these specifications provided that the Contractor actively participates in the group, makes every effort to assure that the group has a positive impact on the employment of minorities and women in the industry, ensures that the concrete benefits of the program are reflected in the Contractor's minority and female work force participation, make a good faith effort to meet its individual goals and timetables, and can provide access to documentation which demonstrates the effectiveness of actions taken on behalf of the Contractor. The obligation to comply, however, is the

Contractor's failure if such a group to fulfill an obligation, shall not be a defense for the Contractor's noncompliance.

5. A single goal for minorities and a separate single goal for women have been established. The Contractor, however, is required to provide equal employment opportunity and to take affirmative action for all minority groups, male and female, and all women, both minority and nonminority. Consequently, the Contractor may be in violation of the Executive Order if a particular group is employed in a substantially disparate manner (for example, even though the Contractor has achieved its goals for women generally, the Contractor may be in violation of the Executive Order 11246 if a specific minority group of women is underutilized.)

6. The Contractor shall not use the goals and timetables or affirmative action standards to discriminate against any person because of race, color, religion, sex or national origin.

7. The Contractor shall not enter into any subcontract with a person or firm debarred from Government contracts pursuant to Executive Order 11246.

8. The Contractor shall carry out such sanctions and penalties for violation of these specifications and of the Equal Opportunity Clause, including suspension, termination and cancellation of existing subcontracts as may be imposed or ordered pursuant to Executive Order 11246, as amended, and its implementing regulations by the Office of Federal Contract Compliance Programs. Any Contractor who fails to carry out such sanctions and penalties shall be in violation of these specifications and Executive Order 11246, as amended.

9. The Contractor, in fulfilling its obligations under these specifications, shall implement specific affirmative action steps, at least as extensive as those standards prescribed in item 7 of these specifications, so as to achieve maximum results from its efforts to ensure equal employment opportunity. If the Contractor fails to comply with the requirements of the Executive Order, the implementing regulations, or these specifications, the Director shall proceed in accordance with 41 C.F.R. 60-4.8.

10. The Contractor shall designate a responsible official to monitor all employment related activity to ensure that the company EEO policy is being carried out, to submit reports relating to the provisions hereof as may be required by the Government and to keep records. Records shall at least include for each employee the name, address, telephone numbers, construction trade, union affiliation, if any, employee identification number when assigned, social security number, race, sex, status (e.g., mechanic, apprentice, trainee, helper or laborer), dates of changes in status, hours worked per week in the indicated trade, rate of pay, and locations at which the work was performed. Records shall be maintained in an easily understandable and retrievable form; however, to

the degree of existing records satisfy this requirement; Contractor shall not be required to maintain separate records.

11. Nothing herein provided shall be construed as a limitation upon the application of other laws which establish different standards of compliance or upon the application of requirements for the hiring of local or other area residents (e.g., those under the Public Works Employment Act of 1977 and the Community Development Block Grant Program).

R. CONFLICT OF INTEREST

All Contractors responding to this Invitation For Bids must avoid organizational conflicts of interest which would restrict full and open competition in this procurement. An organizational conflict of interest means that due to other activities, relationships or contracts, a Contractor is unable, or potentially unable to render impartial assistance or advice to the Authority; a Contractor's objectivity in performing the work identified in the specifications is or might be otherwise impaired; or a Contractor has an unfair competitive advantage. Contractor is obligated to fully disclose to the Authority in writing any conflict of interest issues as soon as they are known. All disclosures must be disclosed at the time of bid submittal.

S. CODE OF CONDUCT

Contractor agrees to comply with the Authority's Code of Conduct as it related to Third-Party contracts, which is hereby referenced and by this reference is incorporated herein. Contractor agrees to include these requirements in all of it's subcontracts.

T. GOVERNMENT INSPECTIONS

The Authority or Federal Government representatives shall have access to the construction site and shall have the right to inspect all project works.

U. LICENSING, PERMITS AND INSPECTION COSTS

1. The Contractor warrants that it has all necessary licenses and permits required by the laws of the United States, State of California, the County of Orange, the Local Jurisdictions, and all other appropriate governmental agencies, and agrees to maintains these licenses and permits in effect for the duration of the Agreement. Further, Contractor warrants that its employees, agents, and Contractors and subcontractors shall conduct themselves in compliance with such laws and licensure requirements including, without limitation, compliance with laws applicable to nondiscrimination, sexual harassment and ethical behavior throughout the duration of this Agreement. Contractor further warrants that it shall not retain or employ an unlicensed subcontractor to perform work on this Project. Contractor shall notify the Authority immediately and in writing of its employees', agents', Contractors' or subcontractors' inability to obtain or maintain, irrespective of the pendency of any appeal, any

such licenses, permits, approvals, certificates, waivers, and exemptions. Such inability shall be cause for termination of this Agreement.

2. Contractor shall procure all permits and licenses; pay all charges, assessments and fees, as may be required by the ordinances and regulations of the public agencies having jurisdiction over the areas in which the work is located, and shall comply with all the terms and conditions thereof and with all lawful orders and regulations of each such public agency relating to construction operations under the jurisdiction of such agency.

V. HAZARDOUS SUBSTANCES

1. CAL-OSHA Requirements

   All flammable, corrosive, toxic, or reactive materials being bid must have a complete CAL-OSHA Safety Data Sheet (SDS) accompanying the submitted bid.

2. South Coast Air Quality Management District (SCAQMD)

   All materials (paints, coatings, inks, solvents, and adhesives) shall comply with the volatile organic compounds (VOC) content requirements of the applicable SCAQMD rules.

3. Notice of Hazardous Substances

   Title 8, California Code of Regulations, Section 5194 (e) (c), states that the employer must inform any Contractor employers with employees working in the employer's workplace of the hazardous substances to which their employees may be exposed while performing their work. In compliance with this requirement, the Authority hereby gives notice to all bidders that the following general categories of hazardous substances are present on the Authority's premises:

   - Adhesives, sealant, patching, and coating products
   - Antifreezes, coolants
   - Cleaners, detergents
   - Paints, thinners, solvents
   - Pesticides, Petroleum products (diesel and unleaded fuel, oil products)
   - Printing, photocopying materials
   - Propane Welding materials/compressed gases (e.g., acetylene, oxygen, nitrogen)

   More specific information may be obtained from the Authority's Safety and Benefits office at (714) 560-5854, and from Safety Data Sheets (SDS) for individual products.

4. Hazardous Waste Labels

Containers containing hazardous substances must be labeled with the following information:

- Identity of hazardous substance-chemical name, not manufacturer or trade name;
- Appropriate health warning relative to health and physical hazard; and

- Name and address of manufacturer or other responsible party.

All containers containing hazardous substances may be rejected unless containers are properly labeled. Containers of 55 gallons or larger must have either weather resistant labels or the information should be painted directly on the containers.

W. CHANGES IN LAWS AND REGULATIONS

CONTRACTOR shall at all times comply with all applicable state and local regulations, policies, procedures and directives, including without limitation those listed directly or by reference in this Agreement. CONTRACTOR's failure to so comply shall constitute a material breach of contract.

X. MEDIA AND THE PUBLIC

Contractor shall immediately refer all inquires from the news media or other public sources to the Authority's Project Manager, or designated representative, relating to this project.

Y. COORDINATION AND ACCESS

Authority may undertake or award other contracts for additional work at the project site. Contractor is responsible for coordinating its work with the work of other Contractors as appropriate. The Contractor acknowledges that they do not have any exclusive access to the site or other work areas Authority may require that certain facilities and areas be used concurrently by the Contractors and others. Contractor shall cooperate fully with Authority Contractors/consultants that may be performing work in the construction area.

Z. UTILITIES RELATED DELAYS

If, due to interruptions caused by the undocumented utilities, Contractor sustains loss which could not have been avoided by the judicious handling of forces, equipment and plant, there shall be paid to the Contractor that amount that the Authority may find to be a fair and reasonable compensation for the part of the Contractor's actual loss, that, in the opinion of Authority was unavoidable, determined as follow: Compensation for idle time of equipment will be determined in the same manner as determinations are made for equipment used in the performance of extra work paid for on a force account basis, as provided in Section F. Extra Work and Changes, Item 3,c. Equipment with the following exceptions:

1. The utility related delay factor for each classification of equipment shown

in the Department of Transportation publication entitled Labor Surcharge And Equipment Rental Rates will be applied to that equipment rental rate.

2. The time for which the compensation will be paid will be the actual normal working time during which the delay condition exists, but in no case will exceed 8 hours in any one day.

3. The days for which compensation will be paid will be the calendar days, excluding Saturdays, Sundays and legal holidays, during the existence of the delay, except that when the rented equipment can be returned or used elsewhere on the project, then no payment will be made for utilities related delays.

Actual loss shall be understood to include no items of expense other than idle time of equipment and necessary payments for idle time of workers, and cost of extra moving of equipment. Compensation for idle time of equipment will be determined as provided in this Section and compensation for idle time of workers will be determined as provided in Section F. Extra Work and Changes, Item 3, b. "Labor," and no markup will be added in either case for overhead and profit. The cost of extra moving of equipment will be paid for as extra work and changes as provided in Section F of General Provisions.

If performance of the Contractor's work is delayed as the result of the Utilities Related Delays, an extension of time determined pursuant to the provisions in Article 18. Termination for Default – Damages for Delay – Time Extensions will be granted.

AA. UTILITIES AND SUBSURFACE STRUCTURES

Contractor shall protect from damage utility and other subsurface structures that are to remain in place, be installed, relocated or otherwise rearranged (as used herein, rearranged includes installation, relocation, alteration or removal).

The right is reserved to the Authority, or their authorized agents, to enter upon the site for the purpose of making those changes that are necessary for the rearrangement of their facilities or for making necessary connections or repairs to their properties. Contractor shall cooperate with forces engaged in this work and shall conduct operations in such a manner as to avoid any unnecessary delay or hindrance to the work being performed by the other forces. Wherever necessary, the work of Contractor shall be coordinated with the rearrangement of utility or other non-highway facilities, and Contractor shall make arrangements with the owner of those facilities for the coordination of the work.

Attention is directed to the possible existence of underground main or trunk line facilities not indicated on the plans or in the special provisions and to the possibility that underground main or trunk lines may be in a location different from that which is indicated on the plans or in the special provisions. Contractor shall ascertain the exact location of underground main or trunk lines whose presence is indicated

on the plans or in the special provisions, the location of their service laterals or other appurtenances, and of existing service lateral or appurtenances of any other underground facilities which can be inferred from the presence of visible facilities such as buildings, meters and junction boxes prior to doing work that may damage any of the facilities or interfere with their service.

If Contractor cannot locate an underground facility whose presence is indicated on the plans or in the special provisions, the Contractor shall so notify the Authority in writing. If the facility for which the notice is given is in a substantially different location from that indicated on the plans or in the special provisions, the additional cost of locating the facility will be paid for as extra work as provided in Section F.

If Contractor discovers underground main, trunk lines or other structures and utilities not indicated on the plans or in the special provisions, Contractor shall immediately give the Authority and the Utility Company written notification of the existence of those facilities. Such facilities shall be located and protected from damage as directed by the Authority, and the cost of that work will be paid for as extra work as provided in Section F. Contractor shall, if directed by the Authority repair any damage which may occur to the main or trunk lines. The cost of that repair work, not due to the failure of the Contractor to exercise reasonable care, will be paid for as extra work as provided in Section F. Damage due to Contractor's failure to exercise reasonable care shall be repaired at the Contractor's cost and expense.

Where it is determined by the Authority that the rearrangement of an underground facility is essential in order to accommodate the project work and the plans and specifications do not provide that the facility is to be rearranged, AuthorityY will provide for the rearrangement of the facility by other forces or the rearrangement shall be performed by Contractor and will be paid for as extra work as provided in Section F.

When ordered by the Authority in writing, Contractor shall rearrange any utility or other subsurface structures necessary to be rearranged as a part of the project work and that work will be paid for as extra work as provided in Section F.

Should Contractor desire to have any rearrangement made in any utility facility, or other improvement, for the Contractor's convenience in order to facilitate the Contractor's construction operations, which rearrangement is in addition to, or different from, the rearrangements indicated on the plans or in the special provisions, the Contractor shall make whatever arrangements are necessary with the owners of the utility or other subsurface structure for the rearrangement and bear all expenses in connection therewith.

Contractor shall immediately notify the Authority of any delays to the Contractor's operations as a direct result of underground utilities or other structures which were not indicated on the plans or in the special provisions or were located in a position substantially different from that indicated on the plans or in the special provisions, (other than delays in connection with rearrangements made to facilitate the

Contractor's construction operations or delays due to a strike or labor dispute). These delays will be considered utilities related delays within the meaning of Section X., Utilities Related Delays and compensation for the delay will be determined in conformance with the provisions in Section M. Contractor shall be entitled to no other compensation for that delay.

BB. LOCATION OF UNDERGROUND FACILITIES (OFFSITE WORK ONLY)

Contractor is required to obtain digging permits prior to start of excavation by contacting the appropriate permitting agencies 15 calendar days in advance. For the Offsite work scan the construction site with electromagnetic or sonic equipment, and mark the surface of the ground where existing underground utilities are discovered. Verify the elevations of existing piping, utilities, and any type of underground obstruction not indicated or specified to be removed but indicated or discovered during scanning in locations to be traversed by piping, ducts, and other work to be installed. Verify elevations before installing new work closer than nearest manhole or other structure at which an adjustment in grade can be made. Perform potholing to confirm location of all the utilities along the construction alignment prior to start of the construction. The Contractor is responsible for all costs associated with these investigations including the cost of equipment, labor and materials required for any confined space entry.

CC. UNFORESEEN HAZARDOUS OR REGULATED MATERIALS

All known hazardous or regulated materials are indicated in the contract documents. If material that is not indicated in the contract documents is encountered that may be dangerous to human health upon disturbance during construction operations, stop that portion of work and notify Authority immediately. Intent is to identify materials such as PCB, lead paint, mercury, petroleum products, and friable and non-friable asbestos. Within 14 calendar days, the Authority will determine if the material is hazardous. If the material is not hazardous or poses no danger, the Authority will direct Contractor to proceed without change. If the material is hazardous and handling of the material is necessary to accomplish the work, Authority will contract with a qualified environmental remediation/hazardous materials removal Contractor for such remediation or removal as may be necessary. The remediation or removal will be performed in compliance with applicable State, Federal, and local environmental laws and regulations.

Contractor shall immediately notify the Authority of any delays to the Contractor's operations as a direct result of Unforeseen Hazardous and Regulated Materials These delays will be considered utilities related delays within the meaning of Section X., Utilities Related Delays and compensation for the delay will be determined in conformance with the provisions in Section M. Contractor shall be entitled to no other compensation for that delay.

SECTION VI: PROJECT SPECIFICATIONS - EXHIBIT B

ORANGE COUNTY TRANSPORTATION AUTHORITY

REPLACEMENT OF MECHANICAL UNITS AT SANTA ANA BUS BASE

PROJECT SPECIFICATIONS

C-4-2550

October 2024

ORANGE COUNTY TRANSPORTATION AUTHORITY

REPLACEMENT OF MECHANICAL UNITS AT SANTA ANA BUS BASE
TABLE OF CONTENTS

Division 01 General Requirements

Summary

01 11 00 Summary of Work ..... 4 pages
01 14 22 Rules and Hours of Operation ..... 5 pages
01 14 23 Coordination with OCTA and Local Agencies…… ..... 2 pages
01 14 25 Procedures in Construction ..... 5 pages
01 14 27 Legal Relations and Responsibility..... 5 pages
01 14 43 Environmental Resources Protection ..... 10 pages

Price and Payment Procedures

01 25 00 Substitution Procedures ..... 5 pages
01 26 00 Contract Modification Procedures ..... 6 pages
01 26 13 Requests for Information ..... 4 pages
01 29 00 Payment Procedures ..... 5 pages

Administrative Requirements

01 31 00 Project Management and Coordination ..... 9 pages
01 32 00 Construction Progress Documentation..... 6 pages
01 33 00 Submittal Procedures ..... 10 pages
01 35 13 Special Project Procedures…….5 pages
01 35 23 Owner Safety Requirements……...3 pages

Quality Requirements

01 41 00 Regulatory Requirements..... 5 pages
01 42 00 References ..... .8 pages
01 42 16 Definitions..... 2 pages
01 43 00 Quality Assurance ..... 5 pages
01 43 01 Contractor Qualifications and Requirements..... 5 pages
01 45 00 Quality Control..... 8 pages

Temporary Facilities and Controls

01 50 00 Temporary Facilities and Controls..... 6 pages
01 57 13 Temporary Erosion and Sedimentation Control ..... 5 pages

Product Requirements

01 60 00 Product Requirements..... 7 pages

Execution and Closeout Requirements

01 71 13 Mobilization and Demobilization ..... 2 pages
01 71 23 Field Engineering..... 5 pages
01 73 29 Cutting and Patching……..……3 pages
01 74 19 Construction Waste Management and Disposal ..... 5 pages
01 74 23 Cleaning ..... 5 pages
01 77 00 Closeout Procedures ..... 5 pages
01 78 00 Closeout Submittals..... 15 pages
01 78 36 Warranties, Guarantees, and Bonds ..... 8 pages
01 79 00 Demonstration and Training ..... 6 pages

Division 02 Existing Conditions

02 41 19 Selective Demolition ..... 7 pages

Division 07 Thermal and Moisture Protection

07 52 16 Mod Bit Membrane Roofing-Patching Only ..... 10 pages

Division 11 Equipment

11 11 33 Industrial Shop Fume Extraction and Vacuum Equipment ..... 13 pages

Division 23 Mechanical

23 00 00 General HVAC Requirements ..... 16 pages
23 01 30.52 Existing HVAC Air Distribution System Cleaning ..... 6 pages
23 05 00 Basic HVAC Materials And Methods ..... 10 pages
23 05 29 Hangers and Supports for HVAC Piping and Equipment ..... 8 pages
23 05 48 Vibration and Seismic Controls for HVAC ..... 7 pages
23 05 53 HVAC Identification ..... 4 pages
23 05 93 Testing, Adjusting, and Balancing for HVAC ..... 20 pages
23 08 00 Commissioning of HVAC ..... 8 pages
23 34 00 HVAC Fans..... 8 pages
23 74 16.13 Packaged, Large Capacity, Rooftop Air-Conditioning Units ..... 24 pages
23 74 23.13 Packaged, Direct-Fired, Outdoor, Heating-Only Makeup-Air Units ..... 12 pages

Division 26 Electrical

26 05 00 Common Work Results for Electrical..... 23 pages
26 05 02 Mechanical-Electrical Coordination ..... 7 pages
26 05 19 Low-Voltage Electrical Power Conductors and Cables ..... 6 pages
26 05 26 Grounding and Bonding for Electrical Systems ..... 9 pages
26 05 29 Hangers and Supports for Electrical Systems ..... 11 pages
26 05 33 Raceways and Boxes ..... 21 pages
26 05 48.16 Seismic Controls for Electrical Systems ..... 9 pages
26 05 53 Identification for Electrical Systems..... 17 pages
26 09 13 Electrical Power Monitoring ..... 30 pages
26 27 26 Wiring Devices..... 20 pages

26 28 13 Fuses ..... 5 pages
26 28 16 Enclosed Switches and Circuit Breakers ..... 12 pages
26 29 13 Enclosed Controllers ..... 19 pages

SECTION 01 11 00
SUMMARY OF WORK

PART 1 - GENERAL

1.01 DESCRIPTION

A. Contract documents: The Contractor shall obtain all copies of the Contract Drawings and Specifications including all addenda through the OCTA CAMMNET website, as required to perform the work. The cost for obtaining any additional documents required for the contractor shall be included in the bid price and no additional compensation will be allowed.

B. All drawings, specifications, and other contract documents, and copies furnished by the Authority are its property. They are not to be used on other work and with the exception of signed contract sets are to be returned to the Authority upon request at the completion of the work. The location of the work, its general nature and extent, and the form and general dimensions of the project and appurtenant works are shown on the contract drawings which are hereby made a part of these specifications as listed herein.

C. The general intent of the contract, specifications, drawings, and other contract documents is that the Contractor shall:

1. Furnish tools, qualified labor, material, equipment, qualified superintendence, and services, assurances and guarantees, and assumptions of risk and responsibility, necessary for the performance of the Work as set forth in the contract documents unless otherwise specifically provided.

2. Begin work promptly and proceed expeditiously and continuously without cessation or shutdown of Work unless otherwise specifically approved in writing by the OCTA Engineer, or directed by the contract documents.

3. Perform, complete, and make ready for its intended purpose, within the times specified, including additional times provided for certain conditions, the work or parts thereof covered by the contract, all in accordance with drawings, specifications, and modifications thereto and directions or instructions the OCTA Engineer may give to supplement the drawings and specifications. The Contractor shall retain sole responsibility and expense for quality control of the work.

D. Words and abbreviations which have well-known technical or trade meanings are used in the contract documents in accordance with such recognized meanings.

E. The organization of the specifications into divisions, sections, parts, and paragraphs, and the arrangement of the drawings, shall not control the Contractor in dividing the work among subcontractors or in establishing the extent of work to be performed by any trade. Study and compare the contract documents and immediately report to the OCTA Engineer any error, inconsistency, or omission that may be discovered.

Contractor shall be liable to OCTA for damage resulting from unreported errors, inconsistencies, or omissions in the contract documents.

F. It will be the responsibility of the Contractor to stage the construction activities at the project site, using the Site Specific Work Plan process (SSWP)

G. Ownership of Materials:

1. Materials furnished by the Contractor under this contract shall become the property of the OCTA.

H. General Summary of Work:

1. Work to be performed by Contractor shall consist of the construction of the work shown on the drawings and detailed in the specifications.

2. The descriptions provided in this section are general in nature and are not meant to detail all work required by the contract documents.

3. The work under this contract generally consists of replacement of mechanical equipment units including heating, ventilation, and air conditioning (HVAC) units, heating and ventilation (HV) make-up air units, exhaust fans (EF), cyclone vacuum (CV) units and any and all related work on the project located at Santa Ana Bus Base 4301 West MacArthur Boulevard, Santa Ana, CA 92704.

4. This project is a facility modification project under OCTA Level 3 Health, Safety and Environmental Specifications and requirements.

I. Other features of the work include, but are not limited to, the following:

1. Replacement of rooftop HVAC, HF, EF units and related work to provide a complete functional mechanical system at each building at the Santa Ana Bus Base.
   a. Entire HVAC system, including existing units that are not being replaced, to be cleaned as described in Section 23 01 30.52 Existing HVAC Air Distribution System Cleaning.

2. Replacement of (4) cyclone units at the Fuel / Break / Tire Repair Building.

3. Temporary HVAC during construction.

4. Complete mobilization and demobilization.

5. Obtaining necessary construction and related permits from various jurisdictional agencies. Contractor shall be responsible for all related fees from various jurisdictional agencies.

6. Obtain and pay for all licenses required by all jurisdictions associated with the approval and requirements of the project.

1.02 INTENT OF DRAWINGS AND SPECIFICATIONS

A. The intent of the drawings and specifications is to prescribe the details for construction and completion of the work that the Contractor undertakes to perform in accordance with the terms of the Contract. Where the drawings or specifications describe portions of the work in general terms, but not complete detail, it is understood that only the best industry practice is to prevail and that only materials and workmanship of the first quality are to be used. Unless otherwise specified, the Contractor shall furnish all labor, materials, tools, equipment, and incidentals, and perform all the work involved in executing the contract in a satisfactory and workmanlike manner.

B. Drawings and specifications are essential parts of the Contract, and a requirement indicated in one is binding as though indicated in all. They are intended to be complementary and to describe and provide for the complete work.

C. Summaries or introductory descriptions of the work of individual sections do not limit requirements. The Contractor's responsibilities include all requirements for proper execution of the work.

D. Division 01 of the specifications governs all divisions. Comply with Division 01 requirements whether or not referenced in individual sections in Divisions 02-49.

E. References to the singular include the plural and do not imply that only one unit of a product is required.

F. Unless an object or activity is specified to be less than the total, the quantity or amount is all of the object or activity.

G. Unless a requirement is specified to apply for a limited time, it applies for the duration of the work.

H. "Including," "such as," "as follows," and similar terms do not limit the meaning to only items listed. The phrase "but not limited to" is understood to follow these expressions.

I. All items in a list apply unless the items are specified as choices.

1.03 REFERENCE MATERIAL

A. Reference specifications or standards referred to in the plans or specifications shall be the most recent version developed as of Contract award. Where referenced standards refer to the "specifications" or the "special conditions," this shall be understood by Contractor to mean the drawings and specifications of this contract. Contractor is responsible to obtain all reference material at its own expense and to make itself familiar with the requirements therein.

1.05 PROJECT ACCESS AND CONTRACT LIMITS

A. Contractor shall submit a Traffic Management Plan as required on Section 01 14 43 Environment Resource Protection, outlining access to the job site and maintaining the facility operational at all times.

B. Construction activity shall be within the normal work hours between 7:00 am to 4:00 pm Monday through Friday. Construction area shall be cordoned off using temporary barriers and chain link fencing unless otherwise noted on Contract Drawings. See contract documents for additional information on phasing and work windows.

PART 2 – PRODUCTS

Not Used

PART 3 – EXECUTION

Not Used

PART 4 – MEASUREMENT AND PAYMENT

No separate measurement or payment shall be made under this section.

END OF SECTION

SECTION 01 14 22

RULES AND HOURS OF OPERATION

PART 1 – GENERAL

1.01 SUMMARY

A. This section outlines rules and hours of operation to which Contractor shall conform during the execution of the work under this contract. It is Contractor's responsibility to ensure that these rules are acceptable to OCTA.

1.02 REFERENCE STANDARDS

A. Comply with the provisions of applicable local, State, and Federal codes, standard plans and specifications, and recommended practices, and with OCTA policy, including:

1. SSPWC: Public Works Standards, Inc., Standard Specifications for Public Works Construction.

2. Caltrans: California Department of Transportation, Trenching and Shoring Manual.

3. Cal/OSHA: California Department of Industrial Relations, Division of Occupational Safety and Health (Cal/OSHA) regulations.

4. OSHA: Federal Occupational Safety and Health Administration regulations.

1.03 SUBMITTALS

A. Site Specific Work Plan (SSWP) containing the information specified herein.

1.04 PROJECT COORDINATION

A. Cooperate with the OCTA Project Manager in all matters requiring coordination.

B. Coordinate execution of the work with the OCTA Project Manager to eliminate or minimize to the greatest extent possible interference with bus operations.

C. Keep OCTA Project Manager fully informed regarding all work.

1.05 CONTRACTOR'S RESPONSIBILITY

A. Perform work in accordance with the contract and all applicable codes, ordinances, rules, regulations, orders, and other legal requirements of governmental bodies and public agencies having jurisdiction, including the OCTA.

B. Damage caused by Contractor to third-party property, signal and communications equipment, or other facilities shall be repaired at Contractor's expense to a condition equal or better than the condition prior to Contractor entry and as accepted by the OCTA Project Manager. At the sole discretion of the OCTA Project Manager, the OCTA Project Manager may direct repairs to be performed by other contractors. Charges for those repairs shall be deducted from Contractor's payment due under this Contract.

C. Items shown on the drawings to be protected in place, or not identified as part of demolitions, removals, or modifications, shall be protected in place in accordance with SSPWC Section 7-9, Protection and Restoration of Existing Improvements, at no additional cost to the OCTA.

D. Perform work within the operating envelope or which affects the operating system only after submitting a Site Specific Work Plan (SSWP) and receiving written approval of the SSWP from the OCTA Project Manager.

E. Furnish all labor, materials, and equipment as required to perform and complete the work within the work windows in accordance with the approved schedule in the SSWP.

1.06 SSWP – GENERAL CONTRACTOR REQUIREMENTS

A. SSWPs with potential to impact normal functioning of any part of the operating system shall include a detailed schedule of events indicating the expected hourly progress of each activity that has duration of one hour or longer. The schedule shall include a time at which each activity planned under the SSWP and the requested work window will be completed. The total duration of the construction activities shall be less than the approved work window. Contractor's failure to complete scheduled activities by the planned time or to put in place an approved contingency plan may adversely impact the operations of the bus base.

B. The SSWP shall be prepared by the Contractor and shall include the following information:

1. All activities necessary to perform construction activities.

2. Conformance with all other requirements applicable under the contract documents.

3. A schedule for the work showing each activity and where and how it affects normal operation. Each activity in the plan shall include all labor, materials, and equipment required to complete the activity within the OCTA allotted time period.

4. List of approved proposed work plans to be performed under the SSWP, with names and phone numbers of Contractor's supervisors in charge of SSWP tasks.

C. SSWPs must be of sufficient details, clarity, and organization to permit easy review and approval by the OCTA Project Manager before the proposed work is performed. SSWPs shall be submitted to the OCTA Project Manager as follows:

1. At least 14 calendar days prior to start of work.

D. The OCTA Project Manager may request explanations and changes to the SSWP to conform the SSWP to the requirements of the contract documents. If the SSWP is not acceptable, Contractor shall revise the SSWP to make it acceptable. Contractor is responsible for submitting a revised SSWP that can be reviewed and approved by the OCTA at least seven days in advance of any work.

E. Contractor will be informed if the SSWP is acceptable not less than seven calendar days prior to the scheduled start of work within the operating envelope. Once the SSWP is accepted, Contractor shall assemble the resources necessary to perform the work represented by the SSWP, so that necessary resources are available one day before the work is to be accomplished. At that time, the OCTA Project Manager will make a final decision as to whether or not the work is to proceed as planned or will be canceled. The prime consideration will be the stage of readiness of Contractor, which Contractor shall demonstrate to the OCTA Project Manager.

1.07 SSWP – SPECIAL CONTRACTOR REQUIREMENTS

A. Contractor shall provide sufficient personnel, equipment, materials, and all other resources necessary to return impacted facilities to full service upon the conclusion of the approved work window.

B. Contractor shall perform the work expeditiously and continuously with no gaps or breaks in work activities or substantive reductions in the labor force, equipment, and materials necessary to construct, reconstruct, or repair the impacted facility to full service upon conclusion of the approved work window.

C. In general, open excavation areas shall be protected per OSHA regulations.

1.08 WORK WINDOWS - GENERAL

A. Site-specific available work windows shall be as approved by the OCTA Project Manager under established procedures.

B. Construction hours shall be limited to 7:00 am to 4:00 pm Monday through Friday unless approved in writing in advance by OCTA and appropriate regulatory agencies.

PART 2 – PRODUCTS

Not Used

PART 3 – EXECUTION

Not Used

PART 4 – MEASUREMENT AND PAYMENT

No payment will be made to Contractor for work of this section.

END OF SECTION

THIS PAGE DELIBERATLY LEFT BLANK

SECTION 01 14 23

COORDINATION WITH OCTA AND LOCAL AGENCIES

PART 1 - GENERAL

1.01 SUMMARY

A. Section Includes:

1. Requirements for coordination with OCTA and Local Agencies.

1.02 REGULATIONS

A. If additional work is being performed by others, on or adjacent to the work site for this Contract, coordinate work with other activities in order to avoid conflicts.

1.03 COORDINATION

A. Coordination: Contractor shall coordinate the Work as stated in the Conditions of the Contract.

B. Relationship of Contract Documents: Drawings, Specifications and other Contract Documents are intended to be complementary. What is required by one shall be as if required by all. What is shown or required, or may be reasonably inferred to be required, or which is usually and customarily provided for similar work, shall be included in the Work.

C. Discrepancies in Contract Documents: In the event of error, omission, ambiguity or conflict in the Drawings or Specifications, Contractor shall bring the matter to the OCTA's attention in timely manner, for the OCTA's determination and direction in accordance with provisions of the Conditions of the Contract.

D. Construction Interfacing and Coordination: Layout, Phasing, and Sequencing of Work shall be solely the Contractor's responsibility. Contractor shall bring together the various parts, components, systems and assemblies as required for the correct interfacing and integration of all elements of Work. Contractor shall coordinate Work to correctly and accurately connect abutting, adjoining, overlapping and related elements, including utilities, for a complete operational system to the satisfaction of the OCTA, agencies, and companies. Provide adequate access for OCTA buses to pass through all areas at all times. Do not block non-construction areas.

E. Contractor shall notify OCTA a minimum of three (3) working days before excavation begin. The work shall be construction in phases where indicated on the contract drawings or specifications. A phase shall be completed and operational before proceeding to the next phase.

F. The Contractor shall cooperate fully with all forces of the Authority. Contractor should note that additional work is being conducted on site with other construction contracts and work of this contract must be coordinated amounts the trades and not additional compensation will be allowed for this coordination work.

G. Unless otherwise directed, provide five (5) days notice of all utility outages and shutdowns. Duration of outages and shutdowns shall not hinder normal operations and maintenance of the facility. In case of accidental damage to power or utility lines, repair power or utility line immediately, provide alternate source of power to keep facility operation during the repair period.

1.04 GENERAL REQUIREMENTS

A. Adhere to work window rules detailed in the approved SSWP under Section 01 14 22, Rules and Hours of Operation and the specifications.

B. See Section 01 14 22, Rules and Hours of Operation

PART 2 – PRODUCTS

Not Used

PART 3 – EXECUTION

Not Used

PART 4 – MEASUREMENT AND PAYMENT

No separate measurement or payment shall be made under this section.

END OF SECTION

SECTION 01 14 25

PROCEDURES IN CONSTRUCTION

PART 1 - GENERAL

1.01 SUMMARY

A. Section Includes:

1. Procedures used in performance of work of a general nature, including work by Contractor, Contractor use of work site, work zone limitations of site, and pollution controls.

B. Related Sections:

1. Section 01 14 23, Rules and Hour of Operation.

2. Section 01 14 27, Legal Relations and Responsibility.

1.02 WORK BY CONTRACTOR

A. Provide work reasonably inferred from the drawings and specifications as being required to produce the intended result whether or not specifically called for.

B. Work, materials, or equipment described in words which have known technical or trade meaning shall be deemed to carry the accepted meaning of recognized standards.

C. Complete all work enumerated under the contract including but not limited to the following:

1. Perform work set forth in the contract documents, including the drawings and specifications.

2. Obtain required permits, inspections, and certifications for material compliance.

1.03 SUBMITTALS

A. All required submittals per OCTA Level 3 Health, Safety and Environmental Specification.

B. Material Safety Data Sheets (MSDSs).

1.04 STORM WATER MANAGEMENT

A. Contractor is responsible for preventing and/or mitigating potential chemical releases, erosion and sedimentation impacts associated with storm water runoff. Contractor shall comply with OCTA's bus base industrial SWPPP and comply with the Statewide General Permit for Storm Water Discharges Associated with Industrial Activities (IGP) order number 2014-0057-DWQ or the latest order (See link below). Contractor shall prepare and submit a best management practices (BMP) plan for OCTA's review and acceptance; and shall implement BMP plan and maintain the BMPs for the duration of the project. See Section 01 57 13, Temporary Erosion and Sedimentation Control, for additional requirements. *(http://www.waterboards.ca.gov/board_decisions/adopted_orders/water_quality/2014/wqo2014_0057_dwq_rev_mar2015.pdf).*

B. Use best management practices (BMPs) Contractor proposes in connection with the execution of construction activity at the project site. Use BMPs included in the Construction Site Best Management Practices (BMP) Manual prepared by the California Stormwater Quality Association, *www.cabmphandbooks.com*.

C. Provide copies of the contractor's BMP plan to subcontractors and keep a copy available onsite at the project office. Provide amendments to the BMP plan when there is a change in construction or operations, or where storm water runoff conditions may affect the discharge of significant quantities of pollutants to surface waters, groundwater, or separate municipal storm sewer systems. Submit the amended BMP plan to the OCTA for review and acceptance as soon as practicable, and retain the amended plan on site.

D. Preparation and implementation of an OCTA-accepted BMP plan does not relieve the Contractor or subcontractors of their responsibilities to comply with state, county, and local governmental requirements, including those for storm water management and non-point source runoff controls.

1.05 MATERIAL SAFETY DATA SHEETS (MSDS)

A. Material Safety Data Sheets (MSDSs) are prepared by manufacturers and suppliers of products that contain hazardous materials. Hazardous material is defined as any substance which is a physical or health hazard, or is included in the Cal/OSHA Director's List of Hazardous Substances, or is listed by the California EPA Office of Environmental Health Hazard Assessment under Title 27 of the California Code of Regulations, Section 27001, Chemicals Known to the State to Cause Cancer or Reproductive Toxicity.

B. No hazardous materials shall be delivered, stored, or used at any work site or facility unless they are properly labeled, tagged, or marked and a copy of the MSDS has been provided to the OCTA. Provide a copy of any updated MSDS to the Engineer immediately.

C. Maintain a file of MSDSs at the work site. Keep MSDS files current; add new or updated MSDSs immediately and provide a copy to the OCTA.

D. See Contract Documents for OCTA Level 3 Health, Safety, and Environmental Specifications for additional requirements.

1.06 CONTRACTOR USE OF WORK SITE

A. Coordinate access, use, and preparation of facilities adjacent to project areas with owners and agencies. Coordination shall include but not be limited to the following:

1. Staging and laydown areas for use under this Contract are as specified or shown on the Drawings. Staging and laydown areas not covered in the Contract Documents shall be requested in writing and approved by the OCTA. The OCTA may or may not grant approval. No equipment may be operated or materials stored or placed for any period of time in unfenced areas. Provide a fence to enclose each laydown or staging area within the right-of-way. Furnish the OCTA with photographs of all staging and laydown areas to document their condition prior to start of work.

2. Contractor shall submit construction staging plan as a part of SSWP for review and approval by OCTA. The staging plan must be accepted by the OCTA prior to undertaking work in accordance with the staging plan.

3. Prior to demobilization, restore to full serviceability fences, walls, signs, and gates affected by Contractor's access to the right-of-way.

B. Confine work site operations to areas permitted by law, ordinances, permits, and the contract.

C. Consider the safety of the work, OCTA patrons and property on and adjacent to the work site when determining amount, location, movement, and use of materials and equipment on work site.

D. Do not load work site with excessive amounts of material, equipment, or other items which have the potential to interfere with the work or with bus base operations.

E. Protect products, equipment, and materials stored on work site.

F. Coordinate operations and secure from property owners at no cost to OCTA additional storage or work areas as needed for proper execution of the work. Adhere to the noise levels and work hours of local ordinances.

G. Protect the general public from work-related activities, and do not unnecessarily inconvenience those persons by work activities.

H. Submit proposed locations of staging areas for OCTA’s approval.

I. Preserve drainage facilities throughout the duration of the work so that there is no ponding or accumulation of water in any work site area, there is no flow of water diverted out of normal drainage channels. Maintain culvert inlets and outlets free of debris.

J. Preserve existing right-of-way fences and walls, and replace any fences or walls damaged during the work to the satisfaction of the owner(s) of the fences or walls.

K. Provide and maintain barriers and chain link fence around the work area as shown on the contract drawings.

1.07 WORK ZONE LIMITATIONS OF SITE

A. In addition to site utilization limitations and requirements indicated in contract documents, divide available space equitably among subcontractors and other entities needing access and space so as to provide best overall efficiency in performance of total work of the project.

B. Schedule deliveries so as to minimize space and time requirements for storage of materials and equipment on site, with minimal disruption to adjoining property owners and operations. Pick-up and delivery shall be conducted only during normal working hours and as approved by OCTA. Contractor shall give OCTA 48 hours notice prior to delivery of equipment or materials to the project site.

1.08 POLLUTION CONTROLS

A. Conduct operations for the execution of the project in compliance with applicable Federal, State, and local regulations controlling pollution and noise levels related to construction work, in accordance with Section 01 14 27, Legal Relations and Responsibility.

PART 2 – PRODUCTS

Not Used

PART 3 – EXECUTION

Not Used

PART 4 – MEASUREMENT AND PAYMENT

No separate measurement or payment shall be made under this section.

END OF SECTION

THIS PAGE DELIBERATELY LEFT BLANK

SECTION 01 14 27

LEGAL RELATIONS AND RESPONSIBILITY

PART 1 – GENERAL

1.01 SUMMARY

A. Section Includes:

1. Laws to be observed, fire prevention, protection of premises, use of explosives, access roads, construction roads, waste control, public relations, and pollution controls.

2. This section complements requirements in other sections.

1.02 LAWS TO BE OBSERVED

A. Keep fully informed of State and Federal laws; county, municipal, and other local ordinances; regulations; and orders of authorities having jurisdiction that affect those engaged in the work, materials used in the work, or conduct of the work.

B. Observe and comply with laws, ordinances, regulations, and orders of authorities having jurisdiction over the work. Contractor's responsibilities include causing Contractor's agents, employees, subcontractors, and visitors to observe and comply with these laws, ordinances, regulations, and orders.

C. Protect and indemnify OCTA and its officers and employees against claims and liabilities arising from or based on Contractor's violation of a law, ordinance, regulation, or order.

D. Report to the OCTA, in writing within two days of discovery, discrepancies or inconsistencies discovered in the drawings, specifications, or contract documents in relation to laws, ordinances, regulations, or orders.

1.03 COORDINATION WITH UTILITIES

A. Coordinate with utility companies to ensure that utility locations are clearly marked for the duration of construction activities.

1.04 FIRE PROTECTION

A. Comply with Federal, State, county, municipal, and other laws and regulations pertaining to the prevention, control, and fighting of fire and to the conduct of welding and burning operations. Procure all related permits and licenses.

B. Supply fire-fighting equipment, supplies, and personnel and perform work required by laws and regulations pertaining to fire protection. If loss or damage results from fire or other cause, promptly repair loss or damage at no expense to OCTA.

1.05 PROTECTION OF PREMISES

A. Take precautions necessary and be responsible for maintaining lights, guards, signs, temporary passages, or other protection.

B. Restore loss or damage to materials, tools, or other articles used or held for use in connection with the work at no expense to OCTA.

C. Restore loss or damage as a result of fire or other cause attributable to Contractor or subcontractors at no expense to OCTA. Promptly repair damage and restore loss to materials, tools, or other articles used or held for use in connection with the work. Carry the work to completion without damage to or interference with other work or contiguous property.

1.06 USE OF EXPLOSIVES

A. Use of explosives is not permitted unless specifically detailed in the specifications or approved in advance in writing by OCTA.

1.07 WORK SITES AND WASTE MATERIAL

A. Obtain required approvals and bear costs of location, construction, maintenance, operation, removal, and transportation of sanitation facilities and waste material from work sites. Sanitation shall conform to local, State, and Federal requirements. Maintain work sites in a neat and orderly condition.

B. Before starting work, submit to OCTA a contingency plan for cleanup of accidental spillage of toxic or detrimental materials and for restoration of soil damaged thereby to near-natural conditions. Conduct the handling, storage, and disposal of waste material so as to avoid pollution of rivers, streams, ponds, or wells, and in compliance with local, State, and Federal environmental laws and regulations

C. Contractor shall acquire all applicable permits. These permits include, but would not be limited to, a Section 404 Wetlands Fill Permit from the USACE, or a Report of Waste Discharge from the Regional Water Quality Control Board (RWQCB), and a Section 401 Water Quality Certification from the RWCQB. Additionally, a Section 1602 Streambed Alteration Agreement from the California Department of Fish and Wildlife (CDFW) would be required for development that would cross or affect any stream course.

1.08 PUBLIC RELATIONS, CONVENIENCE, AND NOTICE OF DAMAGE

A. Conduct operations so as to offer the least possible obstruction and inconvenience to the public. Have under construction no greater length or amount of work than can be prosecuted properly with due regard to the rights of the public. Control temporary noise from construction equipment by using work hour controls and maintenance of muffler systems on machinery as necessary.

B. Provide, at Contractor's expense, adequate safeguards, safety devices, and protective equipment, and take other needed action, both at Contractor's own volition and as the OCTA may determine reasonably necessary, to protect property, life, health, and public safety in connection with the performance of the work covered by the contract.

C. Notify the OCTA in writing within 24 hours after causing injury to persons or damage to public or private property, including above and below ground structures. Contractor shall be responsible and liable for all damages and injuries.

1.09 ENVIRONMENTAL AND ANTI-POLLUTION

A. Comply with Federal, State, county, municipal, and other local laws and regulations pertaining to the environment, including noise, aesthetics, air quality, water quality, and resources of archaeological significance. Refer also to Section 01 14 43 Environmental Resource Protection for additional requirements. Expense of compliance with these laws and regulations is included in the lump sum and unit prices. Provide water used for dust control, or for pre-wetting areas to be paved, as required; no payment will be made by OCTA for this water.

B. Carry out grading and other work in a manner which will not create a pollution problem. Temporary construction roads, haul roads, and work areas shall be maintained free from excessive dust by an approved program of sprinkling, graveling, chemical treatment, temporary asphalt pavement, or combination thereof for the duration of the work.

C. Give attention to the effect of work operations upon the landscape, and take care to maintain natural surroundings undamaged. Disturbances of land or waters outside the limits of construction shall be rehabilitated by Contractor at its expense, when and as directed by the OCTA.

D. Prevent pollution of storm drains, rivers, streams, irrigation ditches, and reservoirs with sediment or other harmful materials. Fuels, oils, bitumen, calcium chloride, cement, or other contaminants that would contribute to water pollution shall not be dumped into or placed where they will leach into storm drains, rivers, streams, irrigation ditches, or reservoirs. If operating equipment in streambeds or in and around open waters, protect the quality of ground water, wetlands, and surface waters.

E. Protect adjacent properties and water resources from erosion and sediment damage throughout the duration of the contract. Comply with applicable NPDES permits and Storm Water Pollution Prevention Plan (SWPPP) requirements. See Section 01 14 25, Procedures in Construction, and Section 01 57 13, Temporary Erosion and Sedimentation Control.

F. Do not conduct construction activities outside the right-of-way during muddy or wet ground conditions.

G. If archaeological remains are uncovered during construction, stop grading operations in the vicinity of the find and immediately notify the OCTA. Refer to Section 01 14 43, Environmental and Resource protection for additional requirements.

H. Costs associated with environmental and pollution control measures are considered incidental to the contract work, at no additional cost to OCTA.

I. Take the following actions and others as necessary to control environmental pollution:

   1. Reduce air pollution by minimizing dust, containing chemical vapors, and controlling engine exhaust gases. Limit idling of machinery as directed by the OCTA.

   2. Reduce water pollution by control of sanitary facilities and proper storage of fuel and other contaminants.

   3. Reduce turbidity and siltation by controlling erosion and sedimentation.

   4. Minimize noise levels.

   5. Dispose of waste and spoil properly.

   6. Prevent landscape defacement and damage.

J. Comply with South Coast Air Quality Management District (SCAQMD) Rule 403 to control fugitive dust emissions. In addition to the requirements contained therein, comply with the following:

   1. Water all land clearing/earth moving activity areas to control dust as required by the OCTA. Areas shall remain visibly moist during active operations.

   2. Visually inspect construction equipment prior to leaving work sites. Wash off any loose dirt with wheel washers as necessary.

   3. Properly tune and maintain all construction equipment in accordance with manufacturer's specifications.

   4. Maintain and operate construction equipment so as to minimize exhaust emissions. During construction activities, trucks and vehicles in loading and

unloading queues shall have their engines turned off when not in use to reduce noise and exhaust emissions.

5. Establish on-site construction equipment staging areas and construction worker parking lots on either paved surfaces or unpaved surfaces treated with soil stabilization materials.

6. Use electricity from power poles where feasible, rather than temporary diesel or gasoline powered generators. Muffle noise from generators to the extent practical.

7. Use on-site mobile equipment powered by alternative fuel sources, such as ultra-low sulfur diesel, methanol, natural gas, propane or butane.

8. Construction grading or earth moving on days when wind gusts exceed or are forecast to exceed 25 mph is prohibited.

PART 2 – PRODUCTS

Not Used

PART 3 – EXECUTION

Not Used

PART 4 – MEASUREMENT AND PAYMENT

A. There will be no separate measurement for work of this section.

B. Full compensation for all work involved shall be included in the various items of work, and no separate payment shall be allowed therefor.

END OF SECTION

SECTION 01 14 43

ENVIRONMENTAL RESOURCE PROTECTION

PART 1 – GENERAL

1.01 SUMMARY

A. Section Includes:

1. Protection of species habitat.
2. Protection of archaeological resources.
3. Protection of paleontological resources (fossils).
4. Protection of human remains.
5. Protection from previously existing contamination.
6. Prevention of fuel spills and hazardous material spills.
7. Prevention of stored fuel leaks.
8. Protection of stormwater quality and control of stormwater quantity.
9. Prevention of traffic impacts.
10. Prevention of road damage.
11. Prevention of fugitive dust.
12. SCAQMD requirements.
13. Disposal of refuse.

B. Related Sections:

1. Section 01 14 25, Procedures in Construction.
2. Section 01 14 27, Legal Relations and Responsibility.

1.02 SUBMITTALS

A. Submit under Section 01 33 00, Submittal Procedures.

B. Written commitment to clean up leaks of fuel or hazardous materials.

C. Traffic Management plan.

1.03 GENERAL

A. Provisions of this section are required to reduce or avoid potential environmental impacts of the project, in accordance with environmental mitigation measures imposed by the OCTA and other responsible agencies.

B. This section summarizes required mitigation. Proceed with mitigation only after consultation with OCTA and Contractor's biological, archaeological, and geological consultants.

PART 2 – PRODUCTS

Not Used

PART 3 – EXECUTION

3.01 PROTECTION OF SPECIES HABITAT

A. Avoid placement of construction equipment and personnel within environmentally sensitive habitat areas used by target species of concern. Activities that cannot be conducted without placement of construction equipment and personnel within sensitive habitats shall be timed to avoid the breeding season of the target species of concern. Coordinate such activities and their timing with the OCTA.

B. Locate equipment storage, fueling and staging areas to minimize risks of direct drainage or runoff into riparian areas or other environmentally sensitive habitats. Take every precaution to prevent the release of toxic substances into surface waters. Report immediately all project spills of hazardous materials to the OCTA, OCTA, US Fish and Wildlife Service (USFWS), California Department of Fish and Wildlife (CDFW), and Regional Water Quality Control Board (RWQCB). Immediately clean up hazardous materials and remove all contaminated soils; dispose of only at approved disposal sites.

C. Stockpiling and staging of materials shall be limited to disturbed areas without native vegetation, areas to be impacted by the project or in non-sensitive habitats.

D. Establish No-Fueling zones within a minimum of 33 feet from all drainages and fire-sensitive areas.

E. Maintain project areas clean of debris to avoid attracting predators of the target species of concern. Enclose all food related trash in sealed containers and regularly remove from site. Pets of construction personnel shall not be allowed on site where they may come into contact with any listed species.

F. If dead or injured listed species are located, biologist, in consultation with the OCTA, will notify the USFWS and the CDFG according to required protocols. Obtain instructions form the OCTA on how to proceed following such discovery.

G. Nesting avian species protected by the Migratory Bird Treaty Act (MBTA):

1. For any construction activities or vegetation removal between February 15 and August 31, a nesting bird survey shall be conducted by contractor's qualified biologist of all habitats within 250 feet of the construction area. Surveys shall be conducted no less than 14 days and no more than 30 days prior to commencement of construction activities and vegetation removal. The nesting bird surveys will be conducted in accordance with CDFG protocol as applicable. If no active nests are identified on or within 250 feet of the construction site, no further mitigation is necessary. A copy of the pre-construction survey shall be submitted to the local agencies jurisdiction. If an active nest of a MBTA protected species is identified onsite (per established thresholds) a 100-foot no-work buffer shall be maintained between the nest and construction activity. This buffer can be reduced in consultation with CDFW and/or USFWS.

2. Completion of the nesting cycle shall be determined by qualified ornithologist or biologist.

3.02 PROTECTION OF ARCHAEOLOGICAL RESOURCES

A. If evidence of an archaeological site or other suspected historical resource as defined by CEQA Guidelines Section 15064.5, including darkened soil representing past human activity, that could conceal material remains (e.g., worked stone, fired clay vessels, faunal bone, hearths, storage pits, or burials) are discovered during any project-related earth-disturbing activities (including projects that would not encounter undisturbed soils), all earth-disturbing activity within 100 feet of the find shall be halted and OCTA shall be notified.

3.03 PROTECTION OF PALEONTOLOGICAL RESOURCES (FOSSILS)

A. Should paleontological resources (i.e., fossil remains) be identified at a particular site during project construction, the construction foreman shall cease construction within 100 feet of the find until a qualified professional can provide an evaluation.

3.04 PROTECTION OF HUMAN REMAINS

A. In the event of the discovery of human remains during construction, procedures outlined in Section 15064.5(e) of the CEQA Guidelines shall be strictly followed. Upon discovery all excavation at the site or any nearby area reasonably suspected to overlie human remains shall cease immediately. Notify OCTA immediately. OCTA will notify County Coroner who will determine if remains are Native American. If the remains are determined to be Native American, the coroner will contact the Native American Heritage OCTA (NAHC). The NAHC will identify the Most Likely Descendent (MLD). The MLD will make recommendations for the appropriate treatment and disposition of the remains and any associated artifacts in accordance with Public Resources Code (PRC), Section 5097.98. Do not commence construction in the area until notified to do so by the OCTA.

3.05 PROTECTION FROM PREVIOUSLY EXISTING CONTAMINATION

A. In the event that previously unknown or unidentified soil and/or groundwater contamination that could present a threat to human health or the environment is encountered during construction of the proposed project, construction activities in the immediate vicinity of the contamination shall cease immediately. If contamination is encountered, a Risk Management Plan shall be prepared and implemented that (1) identifies the contaminants of concern and the potential risk each contaminant would pose to human health and the environment during construction and post development and (2) describes measures to be taken to protect workers, and the public from exposure to potential site hazards. Such measures could include a range of options, including, but not limited to, physical site controls during construction, remediation, long-term monitoring, post development maintenance or access limitations, or some combination thereof. Depending on the nature of contamination, if any, appropriate agencies shall be notified. If needed, a Site Health and Safety Plan that meets Occupational Safety and Health Administration requirements shall be prepared and in place prior to commencement of work in any contaminated area.

3.06 PREVENTION OF FUEL SPILLS AND HAZARDOUS MATERIAL SPILLS

A. Store fuel, hazardous materials, and chemicals of all types in a contained staging area.

B. Conduct equipment refueling and maintenance in the contained staging area.

C. Check vehicles daily for leaks.

3.07 PREVENTION OF STORED FUEL LEAKS

A. Provide berms or other secondary containment at fuel/chemical storage areas.

B. Test storage tanks, valves, etc., for leaks.

C. Submit a written commitment to provide labor, equipment, and materials to promptly clean up any leakage.

3.08 PROTECTION OF STORMWATER QUALITY AND CONTROL OF QUANTITY

A. Comply with the stormwater quality plan prepared before issuance of construction permits. The plan will incorporate the state's industrial best management practices and other techniques if more effective. Refer to Section 01 14 25 Procedures in Construction for additional requirements.

B. Runoff from impervious areas is to be detained, treated to industrial standards, and released under control.

3.09 PREVENTION OF TRAFFIC IMPACTS

A. The Contractor shall prepare and submit a Traffic Management Plan in conjunction with local jurisdictions addressing the following:

1. Detours.

2. Coordination with any other construction projects.

3. Length and timing of street closures.

4. Coordination with police and fire departments regarding changes in emergency access routes.

5. Temporary access routes and signage for any affected commercial property.

6. Contact information for OCTA, contractors and their personnel.

B. Conform to all conditions required therein. Notify Resident Inspector in advance of any constructions activities that could potentially violate the requirements and conditions set forth in the plan.

C. Construction parking shall be configured to minimize traffic interference during the construction period and, therefore, reduce idling of traffic.

D. Temporary traffic controls are provided, such as a flag person, during all phases of construction to facilitate smooth traffic flow.

E. Construction activities that affect traffic flow on the arterial system be scheduled to off-peak hours (10:00 A.M. to 4:00 P.M.).

F. Dedicated on-site and off-site left-turn lanes on truck hauling routes be utilized for movement of construction trucks and equipment on site and off site to the extent feasible during construction activities.

G. To ensure adequate access for emergency vehicles when construction activities would result in temporary lane or roadway closures, the contractor shall consult with the local agencies, Police and Fire Departments to disclose temporary lane or roadway closures and alternative travel routes. The contractor shall be required to keep a minimum of one lane in each direction free from encumbrances at all times on perimeter streets accessing the project site. If construction activities require the complete closure of a roadway segment, the Contractor shall coordinate with the local agencies, Police and Fire Departments to designate proper detour routes and signage indicating alternative routes.

3.10 PREVENTION OF ROAD DAMAGE

A. Before and after offsite road and utility construction, videotape the affected roadway and its access roads.

B. Temporarily repair roadway damage caused during construction.

C. Permanently restore damaged roadway to its original condition immediately after offsite improvements are completed.

D. Establish construction truck routes with local jurisdictions before beginning offsite work. Refer to Section 01 14 27 Legal Relations and Responsibility for additional requirements.

E. Consult with local jurisdictions to coordinate offsite work with other projects in the vicinity.

3.11 SCAQMD REQUIREMENTS

A. Refer to Section 01 14 27 Legal Relations and Responsibility for these requirements.

B. All diesel-powered equipment used will be retrofitted with after-treatment products (e.g., engine catalysts).

C. All heavy-duty diesel-powered equipment operating and refueling at the project site use low-NOX diesel fuel to the extent that it is readily available and cost effective (up to 125 percent of the cost of California Air Resources Board diesel) in the South Coast Air Basin (this does not apply to diesel powered trucks traveling to and from the project site).

D. Construction equipment engines be maintained in good condition and in proper tune per manufacturer’s specification for the duration of construction.

E. Construction operations rely on the electricity infrastructure surrounding the construction site rather than electrical generators powered by internal combustion engines.

F. As required by South Coast Air Quality Management District Rule 403—Fugitive Dust, all construction activities that are capable of generating fugitive dust are required to implement dust control measures during each phase of project development to reduce the amount of particulate matter entrained in the ambient air. These measures include the following:

1. Application of soil stabilizers to inactive construction areas.

2. Quick replacement of ground cover in disturbed areas.

3. Watering of exposed surfaces three times daily.

4. Watering of all unpaved haul roads three times daily.

5. Covering all stock piles with tarp.

6. Reduction of vehicle speed on unpaved roads.

7. Post signs on-site limiting traffic to 15 miles per hour or less.

8. Sweep streets adjacent to the project site at the end of the day or hourly per Section 01 14 27, 1.10 J if visible soil material is carried over to adjacent roads.

9. Cover or have water applied to the exposed surface of all trucks hauling dirt, sand, soil, or other loose materials prior to leaving the site to prevent dust from impacting the surrounding areas.

3.12 PREVENTION OF NOISE IMPACTS

A. Limit noise-producing activities to hours required by the local jurisdictions for construction activities.

B. Construction-related equipment, including heavy-duty equipment, motor vehicles, and portable equipment, shall be turned off when not in use for more than 30 minutes. Diesel-fueled commercial motor vehicles with gross vehicular weight ratings of greater than 10,000 pounds shall be turned off when not in use for more than 5 minutes.

C. Contractor shall require by contract specifications that the following construction best management practices (BMPs) be implemented by contractors to reduce construction noise levels:

1. As requested by the OCTA's Project Manager and/or specified in Contract Document, two weeks prior to the commencement of construction, the Contractor

shall provide notification to surrounding land uses within 300 feet of the project site disclosing the construction schedule, including the various types of activities that would be occurring throughout the duration of the construction period.

2. Ensure that construction equipment is properly muffled according to industry standards and be in good working condition.

3. Place noise-generating construction equipment and locate construction staging areas away from sensitive uses, where feasible.

4. Schedule high noise-producing activities between the hours of 8:00 A.M. and 3:30 P.M. to minimize disruption on sensitive uses, Monday through Friday.

5. Implement noise attenuation measures, which may include, but are not limited to, temporary noise barriers or noise blankets around stationary construction noise sources.

6. Use electric air compressors and similar power tools rather than diesel equipment, where feasible.

7. Construction-related equipment, including heavy-duty equipment, motor vehicles, and portable equipment, shall be turned off when not in use for more than 10 minutes.

8. Construction hours, allowable workdays, and the phone number of the job superintendent shall be clearly posted at all construction entrances to allow for surrounding owners and residents to contact the job superintendent. If the City or the job superintendent receives a complaint, the superintendent shall investigate, take appropriate corrective action, and report the action taken to the reporting party.

D. Construction staging areas along with the operation of earthmoving equipment within the project area would be located as far away from vibration and noise sensitive sites as possible.

E. Heavily loaded trucks used during construction would be routed away from residential streets.

3.13 DISPOSAL OF REFUSE

The Contractor shall establish a construction management plan with Disposal Company to divert a target of 50 percent of construction, demolition, and site clearing waste.

PART 4 – MEASUREMENT AND PAYMENT

No separate measurement or payment will be made for the work of this section.

END OF SECTION

THIS PAGE DELIBERATELY LEFT BLANK

SECTION 01 25 00

SUBSTITUTION PROCEDURES

PART 1 - GENERAL

1.02 SUMMARY

A. Section Includes:

1. Administrative and procedural requirements for requesting substitutions.

B. Definitions:

1. Substitutions: Requests by the Contractor to deviate from specified requirements for products, material, equipment, and methods, or to provide products other than those specified, shall be considered requests for substitutions, limited to the following conditions:

   a. Substitutions requested during the bidding period and accepted prior to the execution of the Contract.

   b. Substitutions requested after execution of the Contract.

C. Substitution Provisions: Refer to substitution provisions of the Instructions to Bidders, in addition to the following specific requirements.

D. Substitution Request Submittal Period:

1. Time Limit:

   a. Substitutions requested during Bidding Period: OCTA will consider requests for substitutions if received during bidding. Request permission for substitutions from the OCTA per provisions of the Instructions to Bidders. If approved, OCTA will issue an addendum allowing all bidders to incorporate the request substitution.

   b. Substitutions requested after execution of Contract: Only within 14 calendar days of the Notice to Proceed will the Authority and the Engineer consider requests for substitutions, requests submitted after this will be denied.

2. Product Availability Waiver: Substitutions will be considered 21 calendar days of execution of the Agreement only when a product becomes unavailable due to no fault of the Contractor. Failure to place orders for specified products sufficiently in advance of required date for incorporation into the Work will not be considered as

a valid reason for which Contractor may request a substitution or deviation from requirements of the Drawings and Specifications.

1.02 SUBMITTAL REQUIREMENTS

A. Substitution Requests: Submit a substitution request for each product for consideration to the OCTA. Identify product or fabrication or installation method proposed for substitution. Include specification section number and title and drawing numbers and titles.

1. Substitution Request Form: Use form acceptable to OCTA Project Manager.

2. Documentation: Substitutions will not be considered when they are indicated or implied on shop drawings, product data or sample submittals without a separate written request, or when acceptance will required substantial revision of the Contract Documents. Show compliance with requirements and the following, as applicable:

a. Statement indicating why specified material or product cannot be provided.

b. Coordination information, including a list of changes or modifications needed to other parts of the work and to construction performed by OCTA and separate contractors, which will be necessary to accommodate proposed substitution.

c. Detailed comparison of significant qualities of proposed substitution with those of the work specified. Significant qualities may include attributes such as performance, weight, size, durability, visual effect, and specific features and requirements indicated or specified.

d. Product data, including drawings and descriptions of products and fabrication and installation procedures.

e. Samples, where applicable or requested.

f. List of similar installations for completed projects with project names and addresses and names and addresses of architects and owners.

g. Material test reports from a qualified testing agency indicating and interpreting test results for compliance with requirements indicated or specified.

h. Research/evaluation reports evidencing compliance with building code in effect for project, from a model code organization acceptable to Inspector and authorities having jurisdiction.

i. Detailed comparison of Contractor's Construction Schedule using proposed substitution with products specified for the work, including effect on the overall contract time. If specified product or method of construction cannot be provided within the contract time, include letter from manufacturer, on manufacturer's letterhead, stating lack of availability or delays in delivery.

j. Cost information, including a proposal of change, if any, in the contract sum.

k. Contractor's certification that Contractor has investigated proposed substitution and that it complies with requirements in the contract documents and is appropriate for applications indicated. Contractor further certifies that Contractor will provide the same or better guarantee or warranty as for specified product or method of construction. Contractor shall also certify that Contractor will coordinate installation of accepted substitution into work, making any changes as may be required for work to be complete in all respects as specified.

l. Contractor's waiver of rights to additional payment or time that may subsequently become necessary because of failure of proposed substitution to produce indicated results.

m. Only one request for substitution will be considered for each product.

n. If the proposed substitution is not accepted, provide the specified product.

3. OCTA Project Manager's Action: If necessary, OCTA Project Manager will request additional information or documentation for evaluation within 7 days of receipt of a request for substitution. OCTA Project Manager will notify Contractor of acceptance or rejection of proposed substitution within 15 days of receipt of request, or 7 days of receipt of additional information or documentation, whichever is later.

   a. Form of Acceptance: Change Order, if costs involved; otherwise written approval.

   b. Use product specified if OCTA Project Manager is unable to make a decision on proposed substitution within time allocated.

1.03 COMPARABLE PRODUCTS

A. See Section 01 60 00, Product Requirements, for discussion of comparable products.

1.04 PRODUCT SUBSTITUTIONS

A. OCTA Project Manager will consider Contractor's request for substitution when the following conditions are satisfied. If the following conditions are not satisfied, OCTA Project Manager will return requests without action, except to record noncompliance with these requirements:

1. Requested substitution is submitted within the time frame stated herein above.

2. Requested substitution offers OCTA a substantial advantage in cost, time, energy conservation, or other considerations, after deducting additional responsibilities OCTA must assume. OCTA's additional responsibilities may include compensation to consultants for redesign and evaluation services, increased cost of other construction by OCTA, and similar considerations.

3. Requested substitution does not require extensive redesign of the project or revisions to the contract documents.

4. Requested substitution is consistent with the contract documents and will produce indicated results.

5. Substitution request is fully documented and properly submitted.

6. Requested substitution will not adversely affect Contractor's Construction Schedule.

7. Requested substitution has received necessary approvals of authorities having jurisdiction.

8. Requested substitution is compatible with other portions of the work.

9. Requested substitution has been coordinated with other portions of the work.

10. Requested substitution provides specified warranty.

11. If requested substitution involves more than one contractor, requested substitution has been coordinated with other portions of the work, is uniform and consistent, is compatible with other products, and is acceptable to all contractors involved.

B. Substitutions will not be considered if they are indicated or implied on shop drawings or project data submittals or Requests for Information without formal submittal request detailed in this section.

1.05 AVAILABILITY OF SPECIFIED ITEMS

A. Prior to execution of Contract, Contractor shall verify that all specified items will be available as required by the schedule for orderly and timely progress of the work. Notify OCTA Project Manager if specified items will not be available.

B. Costs of delays because of non-availability of specified items, when such delays could have been avoided by the Contractor, will deducted from amounts due or to become due the contractor, and will not be borne by OCTA.

C. Substitutions during construction for prior approved items will only be considered under the following circumstances:

1. Substitution is required for compliance with subsequent interpretation of code.

2. Specified item cannot be provided within the contract time or becomes unavailable through no fault of contractor.

3. Subsequent information discloses that specified item or system will not perform properly or fit in designated space, or manufacturer or supplier refuses to certify or warrant performance as required.

PART 2 – PRODUCTS

Not Used.

PART 3 – EXECUTION

Not Used

PART 4 – MEASUREMENT AND PAYMENT

A. No separate measurement will be made for the work of this section.

B. No separate payment will be made for the work of this section.

END OF SECTION

SECTION 01 26 00

CONTRACT MODIFICATION PROCEDURES

PART 1 – GENERAL

1.01 SUMMARY

A. Section Includes:

1. Administrative and procedural requirements for handling and processing contract modifications.

B. Related Sections:

1. Section 01 60 00, Product Requirements, for procedures to approve comparable products.

2. Section 01 25 00, Substitution Procedures, for procedures to propose substitutions.

3. Section 01 26 13 Requests for Information, for procedures to clarify and interpret the contract documents.

1.02 MINOR CHANGES IN THE WORK / FIELD ORDERS

A. OCTA will issue supplemental instructions authorizing minor changes in the work, not involving adjustment to the Contract Price or the Contract Time, in written form.

1.03 DOCUMENTATION OF CHANGES IN AGREEMENT PRICE AND AGREEMENT TIME

A. Documentation of Changes in Contract Sum and Contract Time: Contractor shall provide full information required for evaluation of proposed changes and to substantiate costs of changes in the Work.

1. Maintain detailed records of Work completed on time and material basis. Contractor shall use “Daily Extra Work Report” provided by the Authority. All extra work reports shall be signed by the Authority and the Contractor verifying all extra materials and labor incorporated into the project at the end of each work day.

2. Document each quotation for a change in Contract Sum and Contract Time, with sufficient cost breakdown data for labor, materials, and equipment to allow evaluation of the quotation.

3. Provide details of cost of all material used for change in work. Provide detail of labor hours expended in change of work, and wage rate of worker. Provide total of hours equipment was used in the work, and hourly rate of the equipment.

B. Additional Data: Upon request by the Engineer, provide additional data to support computations:

1. Quantity of product, material, labor, and equipment.

2. Overhead and profit (20% includes all superintendence, taxes, insurance, bonds, overhead and profit, etc.). 20 percent overhead and profit shall be divided between Contractor and sub-contractor(s).

3. Justification for change in Contract Time, if claimed.

4. Credit for deletions from Contract, similarly documented.

1.04 CHANGE PROCEDURES

A. Change Procedure – General: The following describe administrative procedures to be followed in complying with provisions of the Conditions of the Contract for changes in the Work.

B. The Engineer's Supplemental Instructions: Minor changes in the Work, not involving an adjustment in either the Contract Sum or Contract Time, as authorized by the Conditions of the Contract. The Contractor shall take prompt action on such instructions.

C. OCTA-Initiated Proposal Requests: OCTA will issue a detailed description of proposed changes in the work that may require adjustment to the Contract Price or the Contract Time. If necessary, the description will include supplemental or revised drawings and specifications.

1. Proposal Requests issued by OCTA are not instructions either to stop work in progress or to execute the proposed change.

2. Proposal Request may include an estimate of additional or deductions in Contract Sum or Contract Time for executing the change and may include stipulations regarding overtime work and period of time the requested response from the Contractor shall be considered valid.

a. Within time specified in Proposal Request or five (5) calendar days, when not otherwise specified, after receipt of Proposal Request, submit a quotation estimating cost adjustments to the Contract Price and the Contract Time necessary to execute the change. Include a list of quantities of products required or eliminated and unit costs, with total amount of purchases and credits to be made. If requested, furnish survey data to substantiate quantities.

b. Indicate applicable taxes, delivery charges, equipment rental, and amounts of trade discounts.

c. Include costs of labor and supervision directly attributable to the change.

d. Include an updated Contractor's construction schedule that indicates the effect of the change, including, but not limited to, changes in activity duration, start and finish times, and activity relationship. Use available total float before requesting an extension of the Contract Time.

e. Submit name of individual authorized to receive construction change documents and who is responsible for informing others in Contractor's employ or subcontractors of changes in the Work.

f. Quotation Form: Use forms acceptable to OCTA.

D. Upon OCTA's approval of a Proposal Request, OCTA will issue a Change Order for signatures of OCTA and Contractor. The OCTA and Contractor will sign the Change Order indicating acceptance and approval of the change.

1.05 WORK CHANGE DIRECTIVE

A. Work Change Directive: In accordance with provisions of the Conditions of the Contract, OCTA may issue a Work Change Directive. A Work Change Directive instructs Contractor to proceed with a change in the work, for subsequent inclusion in a Change Order.

B. Work Change Directive contains a complete description of change in the work. It also designates method to be followed to determine change in the Contract Price or the Contract Time. Contractor shall promptly execute the change in the Work.

C. Changes Based on Stipulated Sum or Time: Construction Change Directive shall be based on stipulated adjustment in Contract Sum and Contract Time as mutually-acceptable to the Authority and Contractor and the change shall be performed immediately. A Change Order for this amount shall be executed at the earliest convenience of all parties. Contractor shall provide a cost estimate based on section 1.03 of this section.

D. Changes Based on Unit Costs or Quantities: When scope of change cannot be accurately determined in advance, a Construction Change Directive shall be executed based on mutually-acceptable quantities and pre-determined unit prices. Actual costs shall be determined after completion of the Work and a Change Order for this amount shall be executed.

E. Changes Based on Time and Material Costs: If directed for changes for which amounts are not defined or are disputed, a Construction Change Directive will be issued by the Authority and Contractor shall execute the Work, keeping accurate

records of time, both labor and calendar days, and cost of materials. See Section 1.03. A. 1.

F. Cost and Time Resolution: If amounts for changes in Agreement price and Agreement time cannot be agreed upon by the Authority and Contractor, amounts shall be resolved in accordance with requirements of the Conditions of the Contract for resolution of disputes.

G. Documentation: Maintain detailed records on a time and material basis of work required by the Work Change Directive. The total construction cost of the change shall not exceed the mutually agreed adjustment in Contract Sum and Contract time of the Change Order.

H. After completion of change, submit an itemized account and supporting data necessary to substantiate cost and time adjustments to the contract.

1.06 CHANGE ORDER

A. Change Orders, General:

1. In accordance with provisions of the Conditions of the Contract, the Engineer and Authority will review Contractor's response to a Proposal Request or a Construction Change Directive and determine with the Contractor the acceptable amount, if any, of the change in Contract Sum and Contract Time.

2. When agreement is reached on the change in Contract Time and Sum, the Engineer will prepare a Change Order, with supplementary documents (Contractor's cost estimate) as necessary to describe the change and the associated costs and schedule impacts, if any.

3. The Authority and Contractor will sign the Change Order indicating acceptance and approval of the change.

1.07 RECONCILIATION OF CHANGE ORDER

A. Schedule of Values: Promptly revise the Schedule of Values and Application for Payment forms to record each authorized Change Order as a separate line item and adjustment to the Contract Sum.

B. Schedules: Promptly revise progress schedules to reflect changes in Contract Time, revising sub-schedules to adjust time for other items of Work as may be affected by the change. Submit revised schedules at the next Application for Payment following approval and acceptance of the Change Order.

C. Change in work due to request for information, or any other reason shall not be reason for claims of delays by the contractor. Contractor shall allow the Consultant seven (7) days to respond to request for information, and additional fourteen (14)

days to the Authority to make necessary changes to resolve changes in work and change orders. Allow the Authority 30 calendar days for final Change Order approval.

PART 2 – PRODUCTS

Not Used.

PART 3 – EXECUTION

Not Used.

PART 4 - MEASUREMENT AND PAYMENT

Not Used.

END OF SECTION

THIS PAGE DELIBERATELY LEFT BLANK

SECTION 01 26 13

REQUESTS FOR INFORMATION

PART 1 - GENERAL

1.01 DESCRIPTION

A. Section Includes:

1. The general requirements for Contractor's requests for information and pertains to all portions of the contract documents.

1.02 DEFINITION

A. A "Request for Information" is defined as a document submitted by the Contractor requesting clarification of a portion of the contract documents, hereinafter referred to as RFI.

B. All questions and requests for clarification of the Contract Documents from the contractor and subcontractors shall be submitted in writing as a "Request for Information".

1.03 CONTRACTOR'S REQUESTS FOR INFORMATION (RFI)

A. When the Contractor is unable to determine from the contract documents, the exact material, process or system to be installed, the Contractor shall request the OCTA to make a clarification of the indeterminate item. Wherever possible, such clarification shall be requested at the next appropriate project meeting, with the response entered into the meeting minutes. When clarification at the meeting is not possible, either because of the urgency of the need or the complexity of the item, the Contractor shall prepare and submit an RFI to the OCTA.

B. RFI's shall be submitted on a form provided by the OCTA. The Contractor will be given the form electronically upon Notice To Proceed.

C. RFI forms shall be completely filled in, and if prepared by hand, shall be fully legible after photocopying. Each page of attachments to RFI's shall bear the contract number, project name, RFI number. Each RFI shall reference a drawing number and/or Specification Section. The Contractor shall include sketches, mark ups on the contract drawings, and/or photographs to clearly demonstrate its requests or questions in each RFI. Contractor shall indicate on the RFI the date by which response is required.

D. RFI's from Subcontractors or Material suppliers shall be submitted through, reviewed by, and signed by the Contractor prior to submittal to the OCTA.

E. Prior to submitting an RFI, the Contractor shall carefully study the Contract Documents to assure that the requested information is not available therein. Contractor shall be responsible for insuring that RFI's are not frivolous or excessive.

F. Frivolous RFIs: Frivolous RFIs include requests for information shown in the contract documents or resulting from Contractor's failure to study and compare contract documents or to coordinate its own work; and RFIs that are incomplete, contain errors, or include unrelated items. The cost in time and materials on the part of OCTA and related design professionals to review unnecessary or frivolous RFIs will be assessed and deducted from the Contractor's final payment.

G. RFI's shall not be used for the following purposes:

1. To request approval of submittals.

2. To request approval of substitutions.

3. To request changes which entail additional cost or credit or changes in the contract time.

4. To request different methods of performing work than those shown or specified.

H. In the event the Contractor believes that a clarification by the OCTA results in additional cost, the Contractor shall not proceed with the Work indicated by the RFI until a Change Order is prepared and approved. Answered RFI's shall not be construed as approval to perform extra work.

I. RFIs submitted to request clarification of issues related to means, methods, techniques and sequencing of construction, or to establish scope of subcontractors' work will be returned without response.

J. Unanswered RFI's will be returned with a stamp or notation indicating: "Not Reviewed."

K. Assign each RFI a sequential number starting from 001. Contractor shall prepare and maintain a log of RFI's and, at any time requested by the OCTA, Contractor shall furnish copies of the log showing all outstanding RFI's. Contractor shall also note all unanswered RFI's in the log.

L. Contractor shall allow for 14 calendar days review and response time for RFI's.

1.04 RESPONSE TO RFI'S

A. OCTA's response to RFIs will be in writing. RFIs received after 12:00 noon will be considered as received on the following working day for purposes of establishing the start of the 14 day response time. OCTA's response may include a request for

additional information, in which case OCTA's time for response will date from time of receipt of additional information.

B. No extension of time will be granted because of Contractor's failure to submit RFIs in a timely manner or to allow a sufficient amount of time for review.

C. OCTA's response will confirm a stated interpretation or solution or otherwise interpret the design intent; this may include an alternative solution, consistent with the design intent of the Contract Documents. Where such a solution would result, in the contractor's opinion, in an extra cost or time extension to the project, contractor shall notify the OCTA prior to implementing the response.

D. Each RFI and the OCTA's response shall become a part of the Contract Documents. To the extent that OCTA's response changes, modifies or amends any portion of the Contract Documents, the response shall be deemed sufficient. No revised Contract Documents will be issued unless the RFI response is insufficient in providing direction to the Contractor. Whenever possible, revised contract documents will be issued in 8-1/2x11 inch or 11x17 inch size, suitable for inclusion with the RFI response. Re-issuance of full size drawings or sets of drawings will be kept to an absolute minimum.

1.05 SPOKEN COMMUNICATIONS

A. Any spoken instructions given to the Contractor on the job site by any person other than the OCTA's personnel is subject to nullification by the OCTA. Contractor shall obtain written documentation of any and all spoken instructions (especially if instructions may reflect an addition to or deduction from the contract sum) from the OCTA prior to commencement of the work resulting from the verbal instructions.

PART 2 – PRODUCTS

Not Used

PART 3 – EXECUTION

Not Used.

PART 4 – MEASUREMENT AND PAYMENT

No separate measurement or payment shall be made under this Section.

END OF SECTION

THIS PAGE DELIBERATELY LEFT BLANK

SECTION 01 29 00

PAYMENT PROCEDURES

PART 1 – GENERAL

1.01 SUMMARY

A. Section Includes:

1. Administrative and procedural requirements necessary to prepare and process Applications for Payment.

2. Administrative and procedural requirements for preparing and submitting a Schedule of Values.

B. Related Sections:

1. Section 01 26 00, Contract Modification Procedures, for administrative procedures for handling changes to the contract.

2. Section 01 32 00, Construction Progress Documentation, for administrative requirements governing the preparation and submittal of the Contractor's construction schedule.

3. Section 01 33 00, Submittal Procedures, for administrative requirements governing the preparation and submittal of the Schedule of Values.

1.02 DEFINITIONS

A. Schedule of Values (Cost Breakdown): A document furnished by Contractor allocating portions of the Contract Price to various portions of the work and used as the basis for reviewing Contractor's Applications for Payment. The Contract Scope of Work including any and all required deliverables are considered by OCTA to be part of the Schedule of Values upon which progress payments will be made to the Contractor, and if not clearly identified in the Contractor’s Schedule of Values, 100% of progress payment will not be made until all required Scope of Work items are completed and received by OCTA.

1.03 SCHEDULE OF VALUES

A. Prepare and submit within 15 calendar days after the effective date in the Notice to Proceed, but in any event prior to the Contractor’s first Application for Payment, for approval by OCTA, a Schedule of Values. If the schedules are affected by Change Orders, prepare and submit updated copies of the schedules under this Section.

B. Submit, under the provisions of Section 01 33 00, Submittals, and a Schedule of Values including the following information:

1. Identify items in the Schedule of Values with the title of Project and location, agreement number, name and address of the Contractor, date of submission, Specification Section/Subsection number, Specification Section/Sub-section title, and Bid item number as contained in the Schedule of Quantities and Prices submitted with the Contractor's bid.

2. Contractor shall indicate subcontracted work items the Schedule of Values including the related subcontractor name(s) and subcontracted amount(s).

3. Schedule shall list the installed value of the component parts of the Work in sufficient detail to serve as a basis for computing values as itemized in the Cost Breakdown for progress payments during construction. Percentage of completed items installed will be paid.

4. Provide a line item to identify each of the following:

   a. Bonds;

   b. Insurance premiums;

   c. Field supervision;

   d. Mobilization cost (not to exceed 10% of the total contract amount).

5. Upon request by OCTA, support values given with data, which will substantiate the correctness of the values.

6. In addition to the requirements stated in the General Conditions, the Schedule of Values shall be developed in the form of an Excel spreadsheet. Submit to OCTA both PDF and native files of the Schedule of Values.

C. Each item shall include a directly proportional amount of Contractor's overhead and profit, which will not be paid separately.

D. Lump Sum bid payment based on Schedule of Values approved by OCTA based on percentage of work completed.

E. The sum of all values listed in the schedule shall equal the total contract Sum.

F. Cost loading of Schedule of Values is for fund management purposes only and will not be constructed to establish unit cost.

G. OCTA's Review: OCTA will review the Schedule of Values to assure that they are reasonable and balanced. When approved, they will be used in reviewing and approving the monthly partial payment requests. If review by OCTA indicates that changes to the schedules are required, upon five (5) calendar days from receipt of

notice from the OCTA, the Contractor shall revise and resubmit schedules in the same manner as the original schedules were prepared and submitted.

1.04 APPLICATION FOR PAYMENT – GENERAL

A. Progress Payment Application: The Authority will prepare a progress payment estimate and will issue the progress payment in compliance with the Agreement General Provisions. Fabricated materials, materials on site but not installed in construction and work items not completed shall not be included in progress payment and will not be paid by the Authority.

B. Application for progress payments and partial progress payments shall be in accordance with Contract General Provision and the approved Schedule of Values.

C. The Contractor shall submit the progress payment application prepared by the Authority and signed by the Contractor's authorized representative and furnish an invoice for further process based on a schedule to be established at the pre-construction meeting. Submit other documentation such as certified payroll, monthly labor utilization form, and waivers as required by contract.

D. For the final payment, OCTA shall determine if all Work of the Contract has been performed by the Contractor according to the provisions of the Contract. OCTA shall make a final estimate and determine the amount remaining due the Contractor. This amount shall include any amounts withheld from previous estimates, but exclude any and all deductions that have been or should be made at the time under other sections of these Specifications.

1.05 WORK AUTHORIZATION CHANGE NOTICE WORK

A. Measurement and payment of Work associated with a Work Authorization Change Notice (WACN) shall be as detailed in the OCTA's Exhibit A.

PART 2 - PRODUCTS

Not Used.

PART 3 - EXECUTION

Not Used.

PART 4 - MEASUREMENT AND PAYMENT

Not Used.

END OF SECTION

THIS PAGE DELIBERATELY LEFT BLANK

SECTION 01 31 00

PROJECT MANAGEMENT AND COORDINATION

PART 1 – GENERAL

1.01 SUMMARY

A. Section Includes:

1. Administrative provisions for coordinating construction operations on project including, but not limited to, the following:

   a. General project coordination procedures.

   b. Administrative and supervisory personnel.

   c. Project meetings.

B. Contractor is responsible for coordination with OCTA selected material suppliers and contractors involved in the project.

C. Related Sections:

1. Section 01 32 00, Construction Progress Documentation, for preparing and submitting Contractor's construction schedule.

2. Section 01 43 01, Contractor Qualifications and Requirements, for required staff and qualifications.

3. Section 01 71 23, Field Engineering, for procedures for coordinating general installation and field-engineering services, including establishment of benchmarks and control points.

4. Section 01 77 00, Closeout Procedures, for coordinating closeout of the contract.

5. Individual specification sections for normal startup, testing, and adjusting procedures required.

1.02 COORDINATION

A. Coordination: Coordinate construction operations with those of other OCTA selected material suppliers and contractors. Coordinate construction operations included in different sections of the specifications to ensure efficient and orderly installation of each part of the work. Coordinate construction operations, included in different

sections, which depend on each other for proper installation, connection, and operation. Contractor is responsible for progress and performance of the work, and shall provide direction to others as required to properly coordinate trades and processes.

1. Schedule construction operations in sequence required to obtain the best results where installation of one part of the work depends on installation of other components, before or after its own installation.

2. Coordinate installation of different components to ensure maximum performance and accessibility for required maintenance, service, and repair.

3. Make adequate provisions to accommodate items scheduled for later installation.

4. Coordinate equipment installation requirements with equipment contractors to prevent delays and facilitate proper installation. Acknowledge, accommodate, and respect equipment contractors' needs for access to the work for the periods required to complete equipment installation. Incorporate these periods into the construction progress schedule and work plan before commencing work.

B. Prepare memoranda for distribution to each party involved (including OCTA and separate contractors and suppliers) outlining special procedures required for coordination. Include such items as required notices, actions, reports, and list of attendees at meetings.

C. Administrative Procedures: Coordinate scheduling and timing of required administrative procedures with other construction activities and activities of other contractors to avoid conflicts and to ensure orderly progress of the work. Such administrative activities include, but are not limited to, the following:

1. Preparation of Contractor's construction schedule.

2. Preparation of the schedule of values.

3. Installation and removal of temporary facilities and controls.

4. Delivery and processing of submittals.

5. Progress meetings.

6. Pre-installation conferences.

7. Commissioning, Startup and adjustment of systems.

8. Training activities.

9. Project closeout activities.

D. Conservation: Coordinate construction activities to ensure that operations are carried out with consideration given to conservation of energy, water, and materials. Coordinate use of temporary utilities to minimize waste.

1.03 KEY PERSONNEL

A. Key Personnel Names: Within 5 days of date of Notice to Proceed, submit a list of key personnel assignments, including superintendent and other personnel in attendance at project site. Conform to requirement of Section 01 43 01 Contractor Qualifications and Requirements. Identify individuals and their duties and responsibilities; list addresses and telephone numbers, including home, office, and cellular telephone numbers and email addresses. Provide names, addresses, and telephone numbers of individuals assigned as standbys in the absence of individuals assigned to project.

1. Post copies of list in project meeting room and in temporary field office. Keep list current at all times.

1.04 INITIAL CONSTRUCTION MEETING

A. The OCTA will schedule the Initial Construction Meeting (Pre-construction meeting) after the Contractor has been provided the written Notice to Proceed.

B. OCTA will distribute a notice of this meeting, along with an agenda of the subjects to be addressed at least one (1) work day prior to the meeting.

C. Contractor's Construction Project Manager and key staff, as defined in Section 01 43 01, and as identified per the requirements of 1.03, shall attend the meeting.

D. The following is a minimum agenda for the Initial Construction Meeting:

1. OCTA will explain and discuss:

a. Insurance, laws, codes, maintenance of traffic, permits, quality control, inspection, and related items.

b. Preparation, submittal, and review of Site Specific Work Plans (SSWP)

c. Procedures for processing RFI's and Submittals

d. Monthly estimate cutoff dates, and procedures for processing Applications for Payment.

e. Distribution of the contract documents.

f. Preparation of record documents.

g. Use of the premises.

h. Work restrictions and permitted working hours.

i. Owner's occupancy requirements.

j. Responsibility for temporary facilities and controls.

k. Procedures for disruptions and shutdowns.

l. Construction waste management and recycling.

m. Parking availability.

n. Areas available for Contractor's Office, work, and storage areas.

o. First aid.

p. Security.

q. Progress cleaning.

r. Level 3 Health, Safety and Environmental Specifications.

2. The Contractor shall introduce, explain, and discuss the following:

a. Contractor's representatives and personnel, briefly describing each person's responsibilities, and furnishing complete contact information for the Contractor's staff.

b. Arrangements for safety, first aid, emergency actions, and security.

c. A list of Subcontractors and suppliers.

d. Sequence of critical Work, the construction schedule and the submittal schedule.

e. Plan for construction sequencing of entire Contract, general worksite layout, temporary facilities, erosion and sedimentation control plans, haul routes, noise, air and water pollution control and temporary closure plans.

f. Breakdown of lump sum items and Schedule of Values.

g. Status of coordination and notification for utility Work.

h. Locations and use of office, storage, parking and construction areas.

i. Method of providing security to the Worksite.

j. Construction methods and coordination of Work within the provisions of the Contract Documents.

k. Coordination with the Work of Subcontractors and procedures for sharing access to the Worksite.

l. Plan for deliveries of major construction equipment and deliveries of long lead-time materials and products needed in the construction of this Contract.

1.05 PROGRESS MEETINGS

A. Progress meetings will be scheduled by OCTA on a weekly basis and more often as necessary. OCTA will make every effort to accommodate the Contractor's availability in establishing the meeting schedule.

B. Attendees: In addition to OCTA and representatives of the Contractor, subcontractors, suppliers, and other entities concerned with current progress or involved in planning, coordination, or performance of future activities shall be represented at these meetings. All participants at the meeting shall be familiar with project and authorized to conclude matters relating to the work.

C. Meetings will focus on the competent and timely execution of the Work under the Contract. The OCTA will chair these meetings. Weekly site meetings will start when Contract Work commences. At the weekly meetings the Contractor shall present a review of the following topics:

1. Safety and accidents.

2. Contractor's Schedule status.

3. Progress according to the current approved schedule.

4. Presentation of new 28-day schedule.

5. Critical activities on the 28-day schedule.

6. OCTA's needs and requests

7. Specific late items of Work.

8. Overall Project schedule status.

9. Contract time.

10. Public impacts, notifications, and contacts.

11. RFI, submittal and change order logs and status.

12. Contract Issues including:

    a. Status of proposal requests.

    b. Pending changes.

    c. Status of Change Orders.

    d. Pending claims and disputes.

    e. Documentation of information for payment requests.

1.06 PRE-INSTALLATION CONFERENCES:

A. Contractor shall conduct a pre-installation conference at Project site before each construction activity that requires coordination with other construction, as required in individual specification sections.

B. Attendees: Installer and representatives of manufacturers and fabricators involved in or affected by the installation and its coordination or integration with other materials and installations that have preceded or will follow, shall attend the meeting. Advice OCTA of scheduled meeting dates.

C. Suggested Agenda: Review progress of other construction activities and preparations for the particular activity under consideration, including requirements for the following:

    1. Contract Documents.

    2. Options.

    3. Related RFIs.

    4. Purchases.

    5. Deliveries.

6. Submittals.
7. Review of any required mockups.
8. Possible conflicts.
9. Compatibility problems.
10. Time schedules.
11. Weather limitations.
12. Manufacturer's written recommendations.
13. Warranty requirements.
14. Compatibility of materials.
15. Acceptability of substrates.
16. Installation procedures.
17. Coordination with other work.
18. Required performance results.
19. Protection of adjacent work.

D. Contractor shall record significant conference discussions, agreements, and disagreements, including required corrective measures and actions.

E. Reporting: Distribute minutes of the meeting to OCTA, each party present and to other parties requiring information.

F. Do not proceed with installation if the conference cannot be successfully concluded. Initiate whatever actions are necessary to resolve impediments to performance of the work and reconvene the conference at earliest feasible date.

1.07 PROJECT CLOSEOUT MEETING:

A. OCTA will schedule and conduct a project closeout conference, at a time convenient to Contractor, but no later than 15 calendar days prior to the scheduled date of Substantial Completion. The conference will review requirements and responsibilities related to project closeout.

B. Attendees: OCTA, Contractor's key personnel, major subcontractors and other concerned parties shall attend the meeting. Participants at the meeting shall be familiar with project and authorized to conclude matters relating to the work.

C. Agenda: OCTA will introduce and discuss items of significance that could affect or delay Project closeout, including the following:

1. Preparation of record documents.
2. Procedures required prior to inspection for Substantial Completion and for final inspection for acceptance.
3. Submittal of written warranties.
4. Requirements for preparing operations and maintenance data.
5. Requirements for demonstration and training.
6. Preparation of Contractor's punch list.
7. Procedures for processing Applications for Payment at Substantial Completion and for final payment.
8. Final Submittal procedures.
9. Coordination of separate contracts.
10. Owner's partial occupancy requirements.
11. Installation of Owner's fixtures, and equipment.
12. Responsibility for removing temporary facilities and controls.

PART 2 - PRODUCTS

Not Used.

PART 3 - EXECUTION

3.01 REPORTING

A. Minutes: OCTA Project Manager will record significant discussions and agreements achieved at all conference chaired by OCTA Project Manager, including initial construction meeting, progress meetings and project closeout meeting. OCTA Project Manager will distribute the meeting minutes to everyone concerned within five (5) working days of the meeting.

PART 4 - MEASUREMENT AND PAYMENT

No separate measurement or payment shall be made under this section.

END OF SECTION

SECTION 01 32 00

CONSTRUCTION PROGRESS DOCUMENTATION

PART 1 - GENERAL

1.01 DESCRIPTION

A. This Section specifies the requirements for preparation of a preliminary schedule, a Contractor's Progress Schedule, related narratives, and progress reporting.

B. The reports and schedules shall be designed to:

1. Assure adequate planning and execution of the Work so that the Work is completed within the number of calendar days allowed in the Contract

2. Assist the Contractor and OCTA Project Manager in appraising:

a. The attainability of the proposed schedule.

b. Conformance to contract requirements.

c. The progress of Work.

C. For all schedules and scheduling requirements/activities related to this Contract, the Contractor shall utilize Primavera Project Planner version 7 or later, or Microsoft Project software as directed by the OCTA Project Manager.

1.02 SUBMITTALS

A. Submit the following information under the provisions of 01 33 00, Submittal Procedures. All electronic file submittals shall include the entire schedule, which is typically provided by utilizing the file backup routine in the software. Electronic submittals shall be on read-only compact disc (CD-ROM) media.

1. Construction Schedule (with narrative) in print and electronic format.

2. Contractor's Progress Schedule in print and electronic format.

3. Weekly Progress Reports (28 day schedule) in print and electronic format.

B. Milestones, as specified in the Contract Documents, shall be incorporated into all areas of the scheduling process.

1.03 CONTRACTOR’S CONSTRUCTION SCHEDULE (BASE SCHEDULE)

A. Within five (5) calendar days of the Notice to Proceed, the Contractor shall prepare and submit to the Engineer for approval a detailed schedule of work. This schedule shall indicate the areas in which the Contractor anticipates working and the dates during which construction operations will be performed. All submittals by the Contractor shall be listed as separate activities in the schedule. The Contractor shall submit three (3) hard copies and a PDF file of the schedule to the Engineer for approval.

B. The detailed schedules shall be of the bar chart or network diagram method, at the Contractor's option. The schedule shall be comprehensive, covering activities at the site of the work, procurement, and construction.

C. The schedule shall identify work items or Milestones that affect or are affected by OCTA Project Manager, other utilities, and other third parties including Subcontractors.

D. The work activities making up the schedule shall be of sufficient detail to assure that adequate planning has been done for proper execution of the Work and such that, in the judgment of the OCTA Project Manager, it provides an appropriate basis for monitoring and evaluating the progress of the Work. A work activity is defined as any activity requiring time and resources (manpower, equipment and/or material) to accomplish. Activity durations will be in workdays. Typical construction activity durations should be between 3 and 14 workdays. Exceptions may be reviewed by the OCTA Project Manager where sub-schedules will be used to define critical portions of prime schedules, materials delivery, key submittals, etc. Activities shall include but not necessarily be limited to the following:

    1. Project mobilization.

    2. Submittal and review of plans and procedures.

    3. Procurement of Materials.

    4. Each item of Work.

    5. Final cleanup.

    6. Final inspection.

    7. All activities by Contractor, OCTA Project Manager, and others, which affect progress or required dates for completion, or both, for each part of the Work.

    8. Release of areas to OCTA Project Manager according to Milestone Dates.

E. Other requirements that shall be incorporated into the Contractor's schedule include

    1. Division of Work into major work areas (i.e. Areas 1, 2, etc.).

2. Manpower required to perform the Work in total man-hours by craft for each activity.

3. All activities that require unusual shift work, such as two shifts, 6-day workweek, etc. shall be clearly identified in the schedule.

F. Each activity shall be labeled with an alphanumeric work breakdown structure/sorting/selection code.

G. The sequence, duration in workdays, and interdependence of activities required for the complete performance of all work shall be shown.

H. The schedule shall begin with the date of the Notice to Proceed and conclude with the date of Final Completion shown in the Contract.

I. The network diagram shall include the following:

1. Time scaled network diagrams based on calendar days and shall be critical path method (CPM) precedence format showing the sequence/interdependence of activities required for complete accomplishment of all items of work.

2. Each activity shall be plotted so that the start/finish dates can be determined graphically (by comparison) with the calendar scale.

3. All network diagrams shall be drawn legibly and accurately on 22” x 34” size media, or other size acceptable to the OCTA Project Manager.

4. Each activity shall be labeled with complete description, planned duration in workdays, and total float time.

5. The schedules shall accurately indicate the sequence and interdependency of all work activities.

1.04 CONTRACTOR’S PROGRESS SCHEDULE

A. The Contractor shall update the Progress Schedule monthly (the “Schedule Update”) and submit to the OCTA Project Manager for review concurrent by the 5th of the month following month for which the progress reflected on schedule.

B. Progress Payment to Contractor will not be made until a schedule conforming to the requirements stated herein is submitted each month to the OCTA Project Manager. A continued failure to supply such schedule data shall be grounds for declaring Contractor in default of the Contract.

C. Contractor’s progress schedule shall:

1. Become an integral part of the Contract and will establish interim completion dates for the various activities under the Contract and shall reflect and be consistent with the Milestone Dates established by the Contract.

2. Be used to determine if any activity is not completed by the Milestone date.

3. Be combined with the Schedule of Values for use in the Contractor's submittal/application for and the OCTA Project Manager's review and approval of monthly partial payments.

1.05 PROGRESS REPORTING

A. Contractor shall provide regular progress reports monthly along with progress schedule submittal to include as described herein.

B. A statement that the approved Contractor's Progress Schedule has not changed or has been revised. Only the revisions described in this statement shall be made to the progress schedule.

C. A 28-day schedule covering the past week, current week and two weeks ahead at each scheduled weekly meeting. The schedule shall be a bar chart schedule, divided into 28 calendar days, listing all activities for the four-week period. Scheduled and actual start and finish dates shall be shown. Each activity shall be identified by its approved activity number and a brief description. The bar chart schedule shall have in the heading the Project Title, Contract Number, Contractor's Name, Date, Contract Day Number and Remaining Contract Days.

1.06 PROGRESS EVALUATION

A. If at any time during the Project, the Contractor fails to complete any activity by its latest scheduled completion date and which late completion of such activity will impact the end date of the work past the Contract Completion Date, Contractor shall within five (5) working days, submit to the OCTA Project Manager a written statement as to how and when Contractor will reorganize his work force to return to the current Contractor's construction schedule. Whenever it becomes apparent from progress evaluation and updated construction schedule data that any Milestone Date(s) or the Contract Completion Date will not be met, Contractor, at his sole cost, shall take some or all of the following actions:

1. Increase construction manpower in such quantities and crafts as shall substantially eliminate the backlog of work and meet the current Contract Completion Date.

2. Increase the number of working hours per shift, the number of shifts per day, the number of work days per week, the amount of construction equipment, or any combination of the foregoing sufficient to substantially eliminate the backlog of work.

3. Reschedule work items to achieve concurrent accomplishment of work activities.

B. Under no circumstances will the addition of equipment or construction forces, increasing work hours, or any other method, manner, or procedure required to return to the contractually required completion date be considered justification for a change order or treated as an acceleration.

C. The Contractor's Progress Schedule shall begin with the date of issuance of the Notice to Proceed (NTP) and conclude with the date of final completion of the project. Float or slack time within the Progress Schedule is not for the exclusive use or benefit of either the OCTA Project Manager or the Contractor but is a jointly owned expiring project resource available to both parties as needed to meet contract milestones and the Contract completion date.

1.07 SUBMITTAL OF SCHEDULES

A. The Contractor shall submit to the OCTA Project Manager for review, two (2) copies of the construction schedule (base schedule) within time frame specified herein. Allow OCTA a minimum of 2 weeks to review the construction schedule. Contractor shall address OCTA's comments on schedule and resubmit within five (5) workdays from receipt of OCTA' comments.

B. The Contractor shall submit to the OCTA Project Manager for review two (2) hard copies of the Contractor's Progress Schedule, one (1) copy of all schedule data, along with one electronic copy within the time frames specified herein. Updates of the Contractor's schedule shall be submitted monthly as part of the payment application submittal.

C. OCTA Project Manager will have five (5) workdays after receipt of the Contractor's Progress Schedule to respond. Upon receipt of OCTA Project Manager's comments, the Contractor shall confer with the OCTA Project Manager on the appraisal and evaluation of the proposed Contractor's Progress Schedule. The Contractor shall make necessary changes resulting from this review, and the Contractor's Progress Schedule shall be resubmitted for review within three (3) workdays after the receipt of comments.

D. The Contractor's construction schedule (base schedule) when reviewed and recognized by the OCTA Project Manager shall stand until updated schedules are submitted to reflect actual completed work, reviewed changes, or recognized delays.

E. All updated or revised schedules submitted after the base schedule shall be in the same detail as the base submittal unless modified in writing by the OCTA Project Manager.

1.08 REVISIONS TO REVIEWED SCHEDULE

A. The Contractor shall accomplish the Work in accordance with Contractor's construction schedule recognized by the OCTA Project Manager. Changes made to Contractor's construction schedule for accomplishing the Work shall in all cases require prior approval by the OCTA Project Manager.

B. The Contractor shall reflect processed Change Orders that affect the schedule, and issuance of emergency change authorizations in the next schedule submittal.

C. If Contractor desires to make a major change to Contractor's construction schedule, the Contractor shall submit to the OCTA Project Manager a schedule change request in writing stating the reasons and justification for the change, for OCTA's review and acceptance. Major changes are defined as follows:

1. Those that affect the time estimate for the accomplishment of an activity.

2. Those that affect the sequence when varied from the original schedule to a degree that there is doubt that the agreed Contract Completion Date will be met.

3. Changes to activities having adequate float to absorb the change shall be considered as minor changes, except that an accumulation of minor changes may be considered a major change when the effect of such changes impact the Project Milestones or the Contract Completion date.

PART 2 – PRODUCTS

Not used.

PART 3 – EXECUTION

Not Used

PART 4 – MEASUREMENT AND PAYMENT

A. No separate measurement or payment shall be made under this section. Contractor's Progress Schedule will be reviewed each month. The monthly progress payment will not be made until the Contractor's Progress Schedule is found by the OCTA Project Manager to be in conformance with the requirements of this Section.

END OF SECTION

SECTION 01 33 00

SUBMITTAL PROCEDURES

PART 1 - GENERAL

1.01 DESCRIPTION

A. This Section consists of requirements for Contractor submittals to the OCTA Project Manager including plans, procedures, certificates, shop drawings, product data, samples, and miscellaneous Work-related submittals. Individual submittal requirements are specified in the applicable specification section for each unit of Work. No construction work shall be commenced prior to submittals and acceptance of all submittals and shop drawings required per contract documents.

1.02 DEFINITIONS

A. Submittals are categorized for convenience as follows:

1. Plans and Procedures: Include narrative descriptions, diagrams, equipment, procedures for excavation, demolition, site clearing, maintenance of traffic, etc.

2. Certificates: Include certified material test reports, certification of proper disposal of demolition materials, or tickets demonstrating compliance with materials, tests or specifications indicated.

3. Equipment: Include equipment specifications, manufacturer information and demonstration of suitability of equipment for intended use.

4. Product Data: Standard published information ("catalog cuts") and specially prepared data for the Work of the Contract, including standard illustrations, schedules, brochures, diagrams, performance charts, instructions and other information to illustrate a portion of the Work. Include standard printed information on materials, products and systems to be furnished by the Contractor for this Contract.

5. Shop Drawings: Include detailed manufacturing and layout information, drawings, diagrams, schedules, and illustrations, demonstrating the contractor's understanding and approach to meeting the intent of the plans and specifications. Shop drawings shall be submitted to the Engineer for review and comment on the conformance of the submitted information to the general intent of the design.

6. Samples: Include physical examples of materials either for limited visual inspection or selection, or (where indicated) for confirmation, testing, and analysis by the OCTA Project Manager.

7. Miscellaneous Submittals: Such submittals shall be related directly to the Work, not administration related. Include but not be limited to asphalt concrete mix design, work schedule, phasing plans, warranties, guarantees, maintenance agreements, workmanship bonds, survey data and reports, physical work records, quality testing and certifying reports, copies of industry standards, record drawings, field measurement data, operating and maintenance materials, overrun stock (and similar information) and, devices and materials applicable to the Work but not processed as shop drawings, product data or samples. Beside the shop drawings required in the project plans or specifications, the OCTA Project Manager may require additional shop drawings demonstrating the contractor's approach to meeting the intent of the plans and specifications as a part of Quality Control/Quality Assurance.

B. Product data, shop drawings, samples, and any other submittals are not contract documents.

1.03 SCHEDULE OF SUBMITTALS

A. It is the Contractor's responsibility to identify the submittals that will be required in each section of specifications and on the contract drawings and determine the date on which each submittal will be made. The submittal schedule, the timeline for which Contractor plans to deliver required submittals to OCTA shall be submitted by the Contractor at time of initial construction meeting to the OCTA Project Manager for review and acceptance. Allow OCTA a minimum of 14 calendar days to review Schedule of Submittal. After review and return by the Engineer, resubmit Schedule of Submittal within 7 calendar days.

B. Throughout the duration of the Contract, Contractor shall, at the OCTA Project Manager's request, submit all product or procedure documentation for any activity in the Contract.

1.04 GENERAL SUBMITTAL REQUIREMENTS

A. Administrative Requirements for Submittal: Submittals shall be made in accordance with requirements specified herein and in Product Sections of the Specifications.

B. Transmission of Submittals: Transmit all submittals through the Project Engineer, unless otherwise directed. Include all information specified below for identification of submittals and for monitoring of review process.

C. Make submittal at time required per the contract documents and per the Submittal Schedule accepted by the OCTA. Allow three (3) weeks for the OCTA's Consultant to review and accept submittals.

D. OCTA Project Manager and Contractor shall discuss at the initial construction meeting, the exact procedure to be adopted for the processing of submittals. Generally, submittals shall be made at the time indicated in Contractor's approved

submittal schedule. OCTA Project Manager will process submittals within 21 calendar days after receipt of each of submittals and within 14 calendar days after receipt of each of resubmittals from Contractor. After review and return by the Engineer, resubmit the submittals within 7 calendar days.

E. Contractor shall be responsible for on time delivery and processing of submittals so as not to impede the progress of the Work.

F. Contractor shall provide, unless otherwise indicated, a PDF of each submittal.

G. Contractor shall, before making submittals, ensure that products will be available in the quantities and in the time required by the Contract.

H. Contractor shall coordinate and sequence different categories of submittals for same work, and interface units of work, so that one will not be delayed for coordination with another.

I. Contractor shall maintain a file of all approved submittal documents on work site.

J. Where required by California law, or as specified in the Contract Documents, submittals shall be signed and sealed by a Professional Engineer licensed in the State of California, or Land Surveyor licensed in the State of California as applicable.

K. Submittals shall be consecutively and uniquely numbered using a document identifier including Contract number and the appropriate suffix, which will include specification section number and submittal number. Submittals under each specification section shall be in a separate package.

L. Submittals Identification: Identify each submittal by Specification Section number in order of submittal submitted to OCTA starting from 001 as the first submittal. Re-submittals shall use same number as original submittal, followed by a point number indicating sequential re-submittal. For example:

001	First submittal of the project
002	Second submittal of the project
002.1	First re-submittal of second submittal of the project
002.2	Second re-submittal of second submittal of the project

1. Title each submittal with Project name, the Contract number (C-X-XXXX), Submittal number, Contractor's Project number and submission date.

2. Identify each element on submittal by reference to Drawing sheet number, detail, schedule, number, assembly or equipment number, Specifications article and paragraph, and other pertinent information to clearly correlate submittal with Contract Drawings. Identify field dimensions clearly and relationships to adjacent

or critical features of Work, any deviations from the contract documents and applicable standards, ASTM, ACI, OSHA, ect.

M. Contractor's review of submittals: Prior to submission to the Engineer for review, Contractor shall review each submittal for completeness and conformance to specified requirements. Contractor shall stamp each submittal with a review action stamp and sign each copy certifying that:

1. Field measurements have been determined and verified.

2. Field construction criteria have been verified.

3. Catalog numbers and similar data are correct.

4. Conformance with requirements of Contract Drawings and Specifications is confirmed.

5. All deviations from requirements of Drawings and Specifications have been identified and noted, and product is available.

N. Submittals which are received from sources other than through Contractor's office or which have not undergone Contractor's review, will be returned marked "Without Action".

O. Contractor shall be responsible for timely delivery of submittals in the proper specified format for each submittal category.

P. Except as otherwise indicated in individual work sections, the Contractor shall comply with requirements specified herein for each indicated category of submittal.

Q. The Contractor shall include an up-to-date log of submittals in each submittal package.

R. Grouping of Submittals: Unless otherwise specifically permitted by the Engineer, make all submittals in groups containing all associated items. The Engineer may reject partial submittals as incomplete or hold them until related submittals are made. Submittals under a specification section shall be in one submittal package.

S. Unsolicited Submittals: Unsolicited submittals will be returned un-reviewed.

T. Record Submittals: Submit record submittals when specified. Record submittals will not be reviewed but will be retained for historical and maintenance purposes.

1.05 CITY PLAN CHECK DRAWINGS AND SHOP DRAWINGS

A. Contractor shall submit to OCTA a full size hard copy and an electronic copy in PDF format of all approved plan check permit drawings issued by the local City, immediately after obtaining the plan check permits drawings from the City.

B. Shop drawings shall be prepared using AutoCAD. Unless otherwise approved by the OCTA Project Manager or indicated in specific sections of the project specific specifications, shop drawings shall be scaled sufficiently large to accurately show all pertinent aspects of the item and its relationship to the work. Acceptable shop drawings sizes are 22” x 34”, 11” x 17” and 8½” x 11” and are scalable. The Contractor shall submit the shop drawing via email or otherwise instructed by OCTA. Native files of shop drawings shall be submitted to OCTA upon request.

C. Shop drawings shall be original drawings prepared for submittal review, fabrication and execution of Work. Direct copies and modified reproductions of Contract Drawings will not be accepted for review. Provide space for review action stamps. Contractor shall field verify all existing conditions and all measurements on site before preparing and submitting shop drawings.

D. Shop drawings shall show, at a minimum, the following:

1. General project information:

    a. The original date of issue;

    b. The dates of all applicable revisions;

    c. The project title, project number, and address;

    d. The names of contractor, subcontractors, suppliers, manufacturers, separate detailers, etc…

2. Detailed manufacturing and layout information.

3. Drawings, diagrams, schedule and illustrations.

4. Bill of materials including materials types, dimensions and weights, quantities, origin of the materials, material certifications.

5. Welding procedure specifications.

6. Erection or installation plans.

7. Any other important items related to specific work of the Project and as requested by the OCTA’s Project Manager.

E. Detailed work drawings shall be submitted by Contractor for temporary structures and for such other temporary work as may be required for construction, but which does not become an integral part of the completed project. Submittals shall include back-up calculations or any information needed to explain the structure or system or its intended use.

F. Where a submittal involves engineering computations or original design work is depicted, the submittal shall show the name, the State of California registration number, seal, and signature of the Professional Engineer certifying that such computations or design work are correct and in conformance with standards, codes, and acceptable engineering practice.

1.06 PRODUCT DATA

A. Contractor shall collect required data into one submittal for each unit of work or system, and mark each copy to show which choices and options are applicable to the Project.

B. Contractor shall include the manufacturer's standard printed recommendations for application and use, certification of compliance with standards, notation of field measurements, which have been checked, and special coordination requirements. A Material Safety Data Sheet (MSDS) shall be submitted for each product.

1.07 CERTIFICATES OF COMPLIANCE

A. Certificates of Compliance shall be submitted by Contractor to OCTA Project Manager for those materials and products for which no samples and test results are specified. The certificates shall:

1. State that the product complies with the respective contract specification and contract drawing requirements.

2. Be accompanied by a certified copy of test results pertaining to the product. All test equipment used shall be verified to be in calibration at the time of each test and test reports shall so indicate. No test shall be made without such verification. When required by the Contract Documents or by law, certified test results shall be sealed by a Professional Engineer licensed to practice in the State of California.

3. Show product represented and its location in the Contract, producer's name, product trade name and catalog number as applicable, place of product origin, test date, testing organization's name and address, quantity of the product to be furnished, and the related Contract Drawing and specification section numbers.

1.08 SAMPLES

A. Provide samples of each color, texture and pattern identical with final condition of proposed materials or products for the work. Include range of samples (not less than three units) where unavoidable variations may be expected. Submit one item only of actual assembly or product. Full-size and complete samples may be returned or may be incorporated into field mock-up and the Work.

B. Submit actual samples. Photographic or printed reproductions will not be accepted. For manufacturer's products, the Contractor shall submit samples from manufacturer, with manufacturer's finish.

C. Include information with each sample showing generic description, source or product name, manufacturer and compliance with standards and specifications.

D. Samples are submitted for review and confirmation by OCTA Project Manager. The Engineer will review and select material for Project only after all samples are received, so that materials may be probably coordinated. OCTA Project Manager will not test samples (except as otherwise indicated) for compliance with specifications. Contractor shall have the exclusive responsibility of demonstrating material compliance.

1.09 SURVEY DATA

A. As required per contract documents and/or by OCTA Project Manager, Contractor shall submit survey data, signed and sealed by a Land Surveyor licensed to practice in the State of California. Refer to Section 01 71 23, Field Engineering for requirements.

1.10 GENERAL DISTRIBUTION

A. Contractor shall provide distribution of OCTA Project Manager's reviewed submittals (not included in foregoing copy submittal requirements) to subcontractors, suppliers, fabricators and installers, governing authorities, and others as necessary for proper performance of the Work.

B. Contractor shall include such additional copies of transmittal to OCTA Project Manager, where required, to receive status marking before final distribution.

1.11 REVIEW OF SUBMITTALS

A. Submittals shall be a communication aid between Contractor and the Engineer by which interpretation of Contract Documents requirements may be confirmed in advance of construction. OCTA Project Manager will review submittals for general conformance with the design concept only. Such review by OCTA Project Manager shall not relieve Contractor or any subcontractor of responsibility for full compliance with contract requirements, for proper design of details, for proper fabrication and construction techniques, for proper coordination with other trades, or for providing all devices required for safe and satisfactory construction and operation.

B. Changes shall only be authorized by separate written Change Order or Construction Change Authorization, in accordance with the Conditions of the Contract and Section 01 26 00 - Contract Modification Procedures.

1.12 SUBMITTAL STATUS

A. Submittals reviewed by OCTA Project Manager and returned to Contractor will be marked with one of the following designations:

1. Conforms
2. Revise as Noted and Resubmit
3. Rejected. Resubmit
4. No Action Taken

B. Contractor shall not proceed with procurement, manufacture or fabrication of items submitted for review, until such submittals have been designated by OCTA Project Manager as "Conforms". Until submittal items receive a conforming designation by OCTA Project Manager, any costs associated with procurement for these items shall be at the Contractor's risk.

1.13 SUBMITTALS DESIGNATED AS "CONFORMS"

A. Each copy of the submittal so designated by OCTA Project Manager will be identified accordingly by being so stamped and dated.

B. One reproducible copy will be returned to Contractor.

C. When a submittal has been designated as "Conforms" by OCTA Project Manager, Contractor shall carry out construction in accordance therewith and no further changes shall be made therein except upon written approval and instructions from OCTA Project Manager.

D. Contractor shall take responsibility for and bear all cost of damages, which may result from the ordering of any material or from proceeding with any part of the Work prior to submittal being marked "Conforms" by OCTA Project Manager.

E. Submittals stamped "Conforms" do not relieve the contractor from the responsibility of performance of Work as intended in the plans and specifications. Refer to 1.11 of this Section.

1.14 SUBMITTALS DESIGNATED AS "REVISE AND RESUBMIT," OR "REJECTED. RESUBMIT"

A. Each copy of the submittal so designated by OCTA Project Manager will be identified accordingly by being so stamped and dated.

B. One copy will be returned to Contractor.

C. If corrections to the submittals are required, copies returned to Contractor will be marked "Rejected. Resubmit", or "Revise and Resubmit", and the required corrections shall be made on the re-submittal copies.

D. Re-submittals will be handled in the same manner as first submittals. Direct specific attention in writing on re-submittals to revisions other than the corrections requested by OCTA Project Manager on previous submittals. A resubmittal shall contain all information required specifically for the submittal per contract documents including corrections requested and approved information in the previous submittals. A resubmittal will supersede the previous version of a submittal and/or resubmittal as applicable. Incomplete or missing information submittals/resubmittals will be returned without review.

E. Contractor shall notify OCTA Project Manager prior to execution of any correction, which constitutes a change of the contract requirements indicated on the submittals.

1.15 SUBMITTALS DESIGNATED AS "NO ACTION TAKEN"

A. Each copy of the submittal so designated by OCTA Project Manager will be identified accordingly by being so stamped and dated.

B. One reproducible copy will be returned to Contractor.

C. Submittals made by the Contractor that are not required by the contract documents or were not otherwise requested shall be designated "No Action Taken"

PART 2 – PRODUCTS

Not Used.

PART 3 – EXECUTION

Not Used.

PART 4 – MEASUREMENT AND PAYMENT

No separate measurement or payment shall be made under this Section.

END OF SECTION

SECTION 01 35 13

SPECIAL PROJECT PROCEDURES

PART 1 - GENERAL

1.01 SECTION INCLUDES

A. Products and installation for patching and extending Work.

B. Transitions and adjustments.

C. Repair of damaged surfaces, finishes, and cleaning.

1.02 RELATED SECTIONS

A. Section 01 35 13 - Coordination with OCTA and Local Agencies: Authority occupancy and maintenance of utility services.

B. Section 01 73 29 - Cutting and Patching: General requirements for cutting and patching requirements.

C. Section 01 50 00 - Temporary Facilities and Controls: Temporary enclosures, protection installed Work, and cleaning during construction.

PART 2 - PRODUCTS

2.01 PRODUCTS FOR PATCHING AND EXTENDING WORK

A. New Materials: As specified in PART 2 - PRODUCTS of applicable product Specification Sections, provide suitable products and construction procedures for patching and extending Work.

B. Type and Quality of Existing Products: Determine by inspection and testing of Products where necessary, referring to existing construction as a standard.

PART 3 - EXECUTION

3.01 EXAMINATION

A. Verify that demolition is complete, and areas are ready for execution of Work.

B. Beginning of alteration Work will be interpreted to mean that Contractor has examined existing conditions and determined that they are acceptable.

3.02 PREPARATION

A. Coverings:

1. Provide weather- and dust-protection coverings as necessary to contain dust and debris. Protect OCTA Property, buses, equipment, utilities, landscaping, and accessories from dust. Provide appropriate covers over all buses parked adjacent to the work area or protect by sprinkling water over work area to control dust.

2. Close area of work with barricades to protect existing construction and new Work from traffic, weather, and extremes of temperature and humidity. At end of work day, provide enclosure around work area with flashing lights so that traffic is aware of construction excavations and new work.

3. Coordinate construction delineation with barricades, but provide OCTA staff cars buses adequate passage to enable the Authority to continue to pass through to parking areas. Provide Bus passage through construction areas if required. OCTA Facility will remain operational during construction.

4. Adjacent bus parking stalls will be used during construction. Provide adequate passage for OCTA buses and staff cars to park in adjacent parking stalls during construction. Do not allow contractor's cars or equipment to park in bus parking stalls adjacent to construction

5. See Section 01 50 00 - Temporary Facilities and Control for additional requirements.

B. Protective Devices and Directional Signage: Provide barricades, directional signage and other protective devices to enable the Authority to continue bus operations, bus traffic through construction areas, occupancy and operation in the existing buildings and adjacent parking stalls. See Section 01 50 00 - Temporary Facilities and Control for additional requirements.

C. Access for Work: Demolish, Cut, move or remove items as necessary for access for alterations, renovation and extension Work. Replace and restore at completion.

D. Disposal of Materials: Immediately remove unsuitable material not marked for salvage, such as decayed wood, insulation, asphalt concrete, corroded rebar, accessories and other materials as required to complete the work. Replace materials as specified for finished Work.

1. Do not allow debris to accumulate in work areas. Dispose debris daily off-site in a legal manner. Dispose all existing asphalt concrete and accessories that are to be removed, and legally dispose off-site.

2. Remove debris and abandoned items from work area and from parking spaces.

E. Surface Preparation: Remove surface finishes and prepare surfaces to provide for proper installation of new materials and finishes.

F. Protection: Protect buses and equipment parked adjacent to construction area from damage.

3.03 INSTALLATION

A. Coordinate Work for alterations and renovations to expedite completion and to accommodate the Authority's concurrent occupancy and use of the facility.

B. Coordinate Work for alterations and renovations in a timely manner to expedite completion and minimize disruption to the Authority's continued use occupied areas and spaces. Park all construction equipment and materials inside areas of construction and barricade construction area on all sides at end of work day. Provide flashing lights around work area from dusk to dawn.

C. Remove, cut, and patch Work in a manner to minimize damage and to provide a means of restoring products and finishes to original or specified new condition. Refer to Section 01 73 29 - Cutting and Patching.

D. Refinish visible existing surfaces to condition before start of construction. Match adjacent finish surface in color and material. Finish to specified condition for each material, with a near transition to adjacent finishes.

E. In addition to specified work, in case of breakdown of under or above ground utilities, plumbing, electrical power, signal systems, and lighting, restore to fully operational condition immediately as before construction commenced. All power, and other systems should be operational at end of work day. The plans are diagrammatic and do not show all utilities, ducting, equipment, and accessories on the site. Contractor will be required to repair immediately utilities, ducting, plumbing lines, power lines, signal and communication system, data lines, equipment, and accessories in case of breakdown or disruption due to construction work and as required to complete the work. Review OCTA record drawings of construction area before excavation.

F. Install products as specified in applicable product specification Sections.

3.04 TRANSITIONS

A. Where Work abuts or aligns with existing construction, perform a smooth and even transition. Patches shall match existing adjacent construction in texture and appearance.

B. When finished surfaces are cut so that a smooth transition is not possible, terminate existing surface along a straight line at a natural line of division. Refer to Section 01 73 29 - Cutting and Patching.

3.05 ADJUSTMENTS

A. Where removal of materials results in adjacent spaces becoming one, rework to a smooth plane without breaks, steps or bulkheads.

B. Where a change of plane of 1/4-inch or more occurs, submit recommendation for providing a smooth transition for the Engineer's review.

C. Fit Work at penetrations of surfaces as specified in Section 01 73 29 - Cutting and Patching.

3.06 REPAIR OF DAMAGED SURFACES

A. Replace portions of adjacent existing surfaces which are damaged, lifted, discolored, or showing other imperfections or require replacement or repairs during replacement work. Extent of replacement will be required to nearest construction joint, expansion joint, break line, natural break, or in a straight line. Provide a smooth transition between existing and new surface.

B. Repair substrate prior to patching finish.

C. Unless noted otherwise or directed by the OCTA Project Manager, all pavement striping, markings, and markers affected by the construction activities shall be reinstalled to match the existing conditions.

3.07 FINISHES

A. Finish surfaces as specified in applicable Sections.

B. Finish patches with material and paint to produce uniform finish and texture over entire area. When finish cannot be matched, refinish entire surface to nearest intersections or joints.

3.08 CLEANING

A. In addition to cleaning specified in Section 01 74 23 - Cleaning, clean the Authority-occupied areas affected by construction activities. Clean areas around the site where asphalt concrete material has fallen during work day. Clean site of work daily before leaving site at end of each work day. Haul debris off-site daily. Clean adjacent bus parking areas daily before leaving site

PART 4 – MEASUREMENT AND PAYMENT

No separate measurement or payment shall be made under this section.

END OF SECTION

SECTION 01 35 23

OWNER SAFETY REQUIREMENTS

PART 1 - GENERAL

1.01 DESCRIPTION

A. The Contractor shall comply with OCTA Level 3 Health, Safety and Environmental Specifications in the contract documents.

B. Work specified in this section consists of furnishing, operating, maintaining, and utilizing safety equipment; providing safety aids on construction equipment; and assuring safe operation. Compliance with requirements of this section shall not relieve Contractor from other obligations imposed elsewhere in contract, by law and by regulation.

1.02 OTHER SECTIONS WITH SAFETY REQUIREMENTS

A. OCTA Level 3 Health, Safety and Environmental Specifications

B. Section 01 14 22, Rules and Hours of Operation

C. Section 01 14 23, Coordination with OCTA and Local Agencies

D. Section 01 14 25, Procedures in Construction

E. Section 01 43 01, Contractor Qualifications and Requirements

1.03 REFERENCE STANDARDS

A. Comply with the provisions of all local, State and Federal codes, specifications, standards and recommended practices, and OCTA Project Manager Policy, in particular:

1. Cal/OSHA: California State Occupational Safety and Health Administration

2. OSHA: Federal Occupational Safety and Health Administration

1.04 QUALITY CONTROL AND QUALITY ASSURANCE

A. Contractor's selection and operation of construction equipment and tools shall meet requirements of California State and Federal Occupational Safety and Health Administration (Cal/OSHA, OSHA).

B. If there is a conflict between the above, the most stringent requirement will apply.

1.05 SUBMITTALS

A. Contractor shall submit, under provisions of Section 01 33 00, Submittals, the following information:

1. Information required by OCTA Level 3 Health, Safety and Environmental Specifications.

2. Safety Data Sheet, per Section 01 14 25, Procedures in Construction.

3. Notification to OCTA Project Manager as soon as reasonably possible of any injury to Contractor's employee, subcontractor of any tier, supplier or other entity engaged in any portion of the work while on OCTA Project Manager property. Contractor shall submit an injury report to OCTA Project Manager within 24 hours of said injury.

4. Other records as required by agencies listed in Part 1.03.

1.06 SAFETY AND HEALTH PERSONNEL

A. Provide a Site Safety Representative, as described in Sections 01 43 01 Contractor Qualifications and Requirements, OCTA Level 3 Health, Safety and Environmental Specifications, and the General Provisions, who shall coordinate and supervise onsite safety and health, including training and testing Contractor's personnel.

1.07 CONSTRUCTION AND SAFETY EQUIPMENT

A. Contractor shall conform to requirements of the OCTA Project Manager, Cal/OSHA, and to applicable codes and regulations of Federal, State, and local authorities having jurisdiction over jobsite safety.

1.08 TESTING EQUIPMENT

A. Testing equipment as applicable to work site safety shall conform to requirements of California Code of Regulations, Title 8, Division of Industrial Safety, unless indicated otherwise.

1.09 IDENTIFICATION OF CONTRACTOR/SUBCONTRACTOR PERSONNEL

A. While performing work at worksite, Contractor personnel of any tier shall be identified with employee's company name or logo affixed to employee's hardhat, identification badge, or other identification acceptable to OCTA Project Manager.

B. Contractor personnel shall wear hard hats, orange safety vests or orange T-shirts with reflective strips, safety glasses, and safety shoes at all times while on the project.

PART 2 – PRODUCTS

Not Used.

PART 3 – EXECUTION

Not Used.

PART 4 – MEASUREMENT AND PAYMENT

No separate measurement or payment shall be made under this Section.

END OF SECTION

SECTION 01 41 00

REGULATORY REQUIREMENTS

PART 1 - GENERAL

1.01 SUMMARY

A. Section Includes:

1. Requirements associated with regulations, standards, and requirements of authorities having jurisdiction.

B. Related Sections:

1. Section 01 14 25, Procedures in Construction.

2. Section 01 14 27, Legal Relations and Responsibility.

1.02 SUBMITTALS

A. Submit in accordance with Section 01 33 00, Submittal Procedures.

B. Before starting the work, submit to OCTA Project Manager copies of permit applications, permits, licenses, receipts for fee payments, judgments, and other similar documents, correspondence, and records obtained for performance of the work.

C. At completion, submit certifications, releases, jurisdictional settlements, notices and other similar documents under Section 01 77 00, Closeout Procedures.

1.03 APPLICABILITY OF INDUSTRY STANDARDS

A. Construction Industry Standards referenced in the contract documents have the same force and effect as if published herein and are made a part of the contract documents. Refer to Section 01 42 00 References.

B. Reference standards (referenced in the contract documents or by governing regulations) have precedence over non-referenced standards that are recognized in the industry for applicability to the work.

1. Building Codes: Performance of the Work shall meet or exceed the minimum requirements of California Code of Regulations (CCR), Title 24, including the following:

a. CCR Title 24, Part 2: Uniform Building Code (UBC), latest edition, with State

of California amendments; referenced as California Building Code (CBC).

b. CCR Title 24, Part 3: National Fire Protection Association (NFPA) 13 - National Electrical Code (NEC), latest edition, with State of California Amendments, referenced as California Electrical Code (CEC).

c. CCR Title 24, Part 9: Uniform Fire Code (UFC), latest edition, with State of California Amendments, referenced as California Fire Code (CFC).

d. CCR Title 24, Part 12: Uniform Building Code Standards (UBC Standards), latest edition, with State of California Amendments; referenced as California Building Standards Code (CBSC).

2. Performance of the Work shall also comply with applicable requirements of California Code of Regulations (CCR), as follows:

a. Title 19 - Public Safety.

b. Title 22 - Social Security.

c. Title 24 - Building Standards, Parts 2 through 7, and Title 25 as applicable.

3. References on the Drawings or in the Specifications to "code", "Code" or "building code" similar terms, not otherwise identified, shall mean the codes specified above, together with all additions, amendments, changes, and interpretations adopted by code authorities of the jurisdiction having authority over the Project.

4. The applicable edition of all codes shall be that adopted at the time of issuance of permits by the jurisdiction having authority and shall include all modifications and additions adopted by that jurisdiction(s).

C. Recognized industry standards shall be used where no specific standard is referenced in the contract documents. Obtain OCTA Project Manager's approval before using any non-referenced standards.

1.04 GOVERNING REGULATIONS AND AUTHORITIES

A. Contact authorities having jurisdiction directly for necessary information and decisions having a bearing on performance of the work.

B. Utility location and protection shall conform to Section 5, Utilities, of the Standard Specifications for Public Works Construction (SSPWC). At each OCTA's property, the contractor shall utilize an independent underground utility locating service, which uses standard locating techniques other than excavating, to identify the location of underground utilities in the areas of the work prior to excavating. The contractor shall determine the exact location of utilities identified in the work area by potholing using hand tools before using any power operated excavating equipment. Utilities now

shown on the plans which are in direct conflict with the work will be dealt with by change orders.

C. Comply with requirements under the National Pollutant Discharge Elimination System (NPDES).

1.05 OTHER APPLICABLE LAWS, ORDINANCES AND REGULATIONS

A. Work shall be accomplished in conformance with all applicable laws, ordinances, rules and regulations of Federal, State and local governmental agencies and jurisdictions, County of Orange, AQMD, CAL-OSHA, and all other agencies having authority over the Project.

B. Work shall be accomplished in conformance with all rules and regulations of public utilities, utility districts, and public agencies providing utility services.

C. Where such laws, ordinances, rules and regulations require more care or greater time to accomplish Work, or require better quality, higher standards or greater size of products, Work shall be accomplished in conformance to such requirements with no change to the Contract Sum And Contract Time, except where changes in laws, ordinances, rules and regulations occur subsequent to the execution date of the Agreement.

D. Contractor shall pay for and obtain all permits required by all agencies having jurisdiction over the work. Contractor shall be required to pay for all temporary utility connections and use to the respective utility company during construction.

1.06 PERMITS

A. Obtain required permits from regulating agencies. Do not start work in areas requiring permits before issuance of permits from authorities having jurisdiction.

1. Coordinate with regulating agencies to obtain required permits.

2. Submit copies of permit applications and permits to OCTA Project Manager.

3. Comply with permit requirements and assume responsibility for any violations.

B. Prepare permit applications and obtain permits as necessary for performance of the work, including but not limited to:

1. Maintenance and protection of vehicle traffic.

2. Excavation, dewatering and discharge of surface water and runoff into existing drainage systems or surface waters.

3. Disposal of debris and soils.

4. All other activities with potential to adversely affect the environment.

5. Written permission from property owner for right of entry onto private property where necessary.

PART 2 – PRODUCTS

Not Used.

PART 3 – EXECUTION

Not Used.

PART 4 - MEASUREMENT AND PAYMENT

4.01 MEASUREMENT

No separate measurement will be made for work of this section.

4.02 PAYMENT

Work of this section is considered incidental to work under other payment item(s) listed in the Schedule of Quantities and Prices and no separate payment will be made.

END OF SECTION

THIS PAGE DELIBERATELY LEFT BLANK

SECTION 01 42 00

REFERENCES

PART 1 - GENERAL

1.01 SUMMARY

A. Section Includes:

1. Use of references in Drawings and Specifications, including requirements for copies of reference standards at Project site.

2. Abbreviations and acronyms.

3. General provisions regarding references.

1.02 USE OF REFERENCES

A. References: The Drawings and Specifications contain references to various standards, standard specifications, codes, practices and requirements for products, execution, tests and inspections. These reference standards are published and issued by the agencies, associations, organizations and societies listed in this Section or identified in individual product specification Sections.

B. Relationship to Drawings and Specifications: Such references are incorporated into and made a part of the Drawings and Specifications to the extent applicable.

C. Referenced Grades Classes and Types: Where an alternative or optional grade, class or type of product or execution is included in a reference but is not identified on the Drawings or in the Specifications, provide the highest, best, and greatest of the alternatives or options for the intended use and prevailing conditions.

D. Copies of Reference Standards:

1. Reference standards are not furnished with the Drawings and Specifications because it is presumed that the Contractor, subcontractors, manufacturers, suppliers, trades and crafts are familiar with these generally-recognized standards of the construction industry.

2. Copies of reference standards may be obtained from publishing sources.

E. Jobsite Copies:

1. Contractor shall obtain and maintain at the Project site copies of reference standards identified on the Drawings and/or in the Specifications in order to properly execute the Work.

2. At a minimum, the following shall be readily available at the site:

   a. Local and State Building Codes: As referenced in Section 01060 - Regulatory Requirements.

   b. Safety Codes: State of California, California Code of Regulations (CCR), Title 8 - Industrial Relations, Chapter 4, Subchapter 7, General Industry Safety Orders.

   c. General Standards: UBC Standards, other model Code standards, UL Building Products Listing, FM Approval Guide and ASTM Standards in Building Codes.

   d. Fire and Life Safety Standards: All referenced standards pertaining to fire rated construction and exiting.

   e. Common Materials Standards: American Concrete Institute (ACI), American Institute of Steel Construction (AISC), American Welding Society (AWS), Gypsum Association (GA), National Fire Protection Association (NFPA), Tile Council of America (TCA) and Woodwork Institute of California (WIC) standards to the extent referenced within the Contract Specifications.

   f. Research Reports: ICBO Evaluation Service (ICBO ES) Research Reports and CABO National Evaluation Service Reports (NER), for products not in conformance to prescribed requirements stated in Building Code.

   g. Product Listings: Approval documentation, indicating approval of authorities having jurisdiction for use of product with local City.

F. Edition Date of References:

   1. When an edition or effective date of a reference is not given, it shall be understood to be the current edition or latest revision published as of the date indicated on the Drawings and Specifications.

   2. All amendments, changes, errata and supplements as of the effective date shall be included.

G. ASTM and ANSI References: Specifications and Standards of the American Society for Testing and Materials (ASTM) and the American National Standards Institute (ANSI) are identified in the Drawings and Specifications by abbreviation and number only and may not be further identified by title, date, revision or amendment. It is presumed that the Contractor is familiar with and has access to these nationally- and industry-recognized specifications and standards.

1.03 ABBREVIATIONS, ACRONYMS, NAMES AND TERMS, GENERAL

A. Abbreviations, Acronyms, Names and Terms: Where acronyms, abbreviations names and terms are used in the Drawings, Specifications or other Contract Documents, they shall mean the recognized name of the trade association, standards generating organization, authority having jurisdiction or other entity applicable.

B. Abbreviations: The following are commonly-used abbreviations which may be found on the Drawings or in the Specifications:

AC or ac	Alternating current or air conditioning (depending upon context)
AMP or amp	Ampere
C	Celsius
CFM or cfm	Cubic feet per minute
CM or cm	Centimeter
CY or cy	Cubic yard
DC or dc	Direct current
DEG or deg	Degrees
F	Fahrenheit
FPM or fpm	Feet per minute
FPS or fps	Feet per second
FT or ft	Foot or feet
Gal or gal	Gallons
GPM or gpm	Gallons per minute
IN or in	Inch or inches
Kip or kip	Thousand pounds
KSI or ksi	Thousand pounds per square inch
KSF or ksf	Thousand pounds per square foot
KV or kv	Kilovolt
KVA or kva	Kilovolt amperes
KW or kw	Kilowatt
KWH or kwh	Kilowatt hour
LBF or lbf	Pounds force
LF or lf	Lineal foot
M or m	Meter
MPH or mph	Miles per hour
MM or mm	Millimeter
PCF or pcf	Pounds per cubic foot
PSF or psf	Pounds per square foot
PSI or psi	Pounds per square inch
PSY or psy	Per square yard
SF or sf	Square foot
SY or sy	Square yard
V or v	Volts

C. Undefined Abbreviations, Acronyms, Names and Terms: Words and terms not otherwise specifically defined in this Section, in the Instructions to Bidders, in the Conditions of the Contract, on the Drawings or elsewhere in the Specifications, shall be as customarily defined by trade or industry practice, by reference standard and by specialty dictionaries such as the following:

1. The American Institute of Architects (AIA) Document M101, "Glossary of Construction Industry Terms".

2. The Construction Specifications Institute (CSI) Technical Document TD 2-4, "Abbreviations".

3. Dictionary of Architecture and Construction, (Cyril M. Harris, McGraw-Hill Book Company, 1975).

4. Encyclopedia of Associations, published by Gale Research Co., available in most libraries.

1.04 ABBREVIATIONS FOR AGENCIES, ASSOCIATIONS, CODES AND STANDARDS

A. Abbreviations for Agencies, Associations, Codes and Standards: The following abbreviations and acronyms may be used in the Drawings and Specifications. When used, the abbreviation or acronym shall mean the full name of the applicable agency, association, organization, society or standard.

AAMA	American Architectural Manufacturers Association
AAR	Association of American Railroads
AASHTO	American Association of State Highway and Transportation Officials
ACI	American Concrete Institute
ADA	Americans with Disabilities Act
ADAAG	Americans with Disabilities Act Accessibility Guidelines
AGA	American Galvanizers Association
AGA	American Gas Association
AHRI	Air-Conditioning, Heating, and Refrigeration Institute
AISC	American Institute of Steel Construction
AISI	American Iron and Steel Institute
AITC	American Institute of Timber Construction
ALSC	American Lumber Standard Committee
AMCA	Air Movement and Control Association International, Inc.
ANSI	American National Standards Institute
APA	APA – The Engineered Wood Association (formerly American Plywood Association)
AREMA	American Railway Engineering and Maintenance-of-Way Association
ASCE	American Society of Civil Engineers
ASHRAE	American Society of Heating, Refrigerating, and Air-Conditioning Engineers
ASME	ASME International (formerly American Society of Mechanical Engineers)
ASSE	American Society of Safety Engineers

ASSE	American Society of Sanitary Engineering
ASTM	ASTM International (formerly American Society for Testing and Materials)
AWI	Architectural Woodwork Institute
AWPA	American Wood Protection Association (formerly American Wood-Preservers' Association)
AWS	American Welding Society
BHMA	Building Hardware Manufacturers Association
Cal/EPA	California Environmental Protection Agency
Cal/OSHA	California Department of Industrial Relations, Division of Occupational Safety and Health
Caltrans	California Department of Transportation, Standard Plans & Specifications 2010 Edition
CBC	California Building Code
CEC	California Electrical Code
CFR	Code of Federal Regulations
CMC	California Mechanical Code
CPA	Composite Panel Association
CPC	California Plumbing Code
CPUC	California Public Utilities Authority
CRI	Carpet and Rug Institute
CRSI	Concrete Reinforcing Steel Institute
DHI	Door and Hardware Institute
DOC	U.S. Department of Commerce
DOT	U.S. Department of Transportation
EPA	U.S. Environmental Protection Agency
FM	FM Approvals
FM	FM Global (formerly Factory Mutual)
FRA	Federal Railroad Administration
FS	Federal Specification
FSC	Forest Stewardship Council
FTA	Federal Transit Administration
GA	Gypsum Association
GANA	Glass Association of North America
HI	Hydraulics Institute
HMMA	Hollow Metal Manufacturers Association
ICC	International Code Council
IEEE	Institute of Electrical and Electronics Engineers
IGCC	Insulating Glass Certification Council
IGMA	Insulating Glass Manufacturers Alliance
ISO	International Organization for Standardization
LBTC	Laguna Beach Transportation Center
LEED	Leadership in Energy and Environmental Design
MPI	Master Painters Institute
MSS	Manufacturers Standardization Society of the Valve and Fittings Industry
NAAMM	National Association of Architectural Metal Manufacturers
NACE	NACE International (formerly National Association of Corrosion Engineers)
NEMA	National Electrical Manufacturers Association

NETA	InterNational Electrical Testing Association
NFPA	National Fire Protection Association
NFPA	National Forest Products Association
NFRC	National Fenestration Rating Council
NHLA	National Hardwood Lumber Association
NSF	NSF International (formerly National Sanitation Foundation)
OSHA	Occupational Safety and Health Administration
PCI	Precast/Prestressed Concrete Institute
PDI	Plumbing and Drainage Institute
PS	Product Standard (US Department of Commerce)
RCSC	Research Council on Structural Connections
RIS	Redwood Inspection Service
RTA	Railway Tie Association
SDI	Steel Deck Institute
SDI	Steel Door Institute
SCRRA	Southern California Regional Rail Authority
SCAQMD	South Coast Air Quality Management District
SMACNA	Sheet Metal and Air Conditioning Contractors' National Association
SPPWC	Standard Plans for Public Works Construction, 2015 Edition
SSPC	Society for Protective Coatings (formerly Steel Structures Painting Council)
SSPWC	Standard Specifications for Public Works Construction, 2015 Edition
TCNA	Tile Council of North America
UL	Underwriters Laboratories Inc.
USDOJ	U.S. Department of Justice
USDOT	U.S. Department of Transportation
USGBC	U.S. Green Building Council
WCLIB	West Coast Lumber Inspection Bureau (stamped WCLB)
WI	Woodwork Institute
WWPA	Western Wood Products Association

1.05 REFERENCE STANDARDS

A. General

1. Specifications, standards, and guidelines referenced in the text are incorporated by reference as if fully set forth. Where a referenced standard includes both administrative and technical provisions, and the administrative provisions conflict with the contract documents, only the technical provisions shall apply. If a referenced standard appears to conflict with the drawings and specifications, consult OCTA Project Manager for resolution.

2. The governing versions of reference standards and codes are those current at the time of contract execution, including errata, amendments, updates, etc., unless noted otherwise.

3. Contractor shall maintain the latest copy of applicable standards at jobsite during submittals, planning and progress of the work. Make standards available for use by OCTA Project Manager upon request.

4. Caltrans: Standard Plans and Specifications 2010 Edition.

5. Standard Plans for Public Works Construction (SPPWC) 2012 Edition, Standard Specifications for Public Works Construction (SSPWC) 2015 Edition.

B. ADA Standards

1. References to ADAAG or the ADA Accessibility Guidelines refer to the ADA [Americans with Disabilities Act] Accessibility Guidelines for Buildings and Facilities, adopted 7/23/04 by the U.S. Access Board, amended 8/5/05, supplemented 3/23/07 reflecting amendments by the U.S. Department of Transportation, available at www.access-board.gov .

2. References to USDOT ADA Standards refer to the U.S. Department of Transportation ADA Standards for Transportation Facilities, effective 11/29/06, available at www.access-board.gov .

3. References to USDOJ ADA Standards are to the U.S. Department of Justice ADA Standards for Accessible Design, 1994, available at www.access-board.gov, or to new standards (currently pending) if in effect at the time of execution of the contract documents.

PART 2 – PRODUCTS

Not Used.

PART 3 – EXECUTION

Not Used.

PART 4 - MEASUREMENT AND PAYMENT

Not Used.

END OF SECTION

SECTION 01 42 16

DEFINITIONS

PART 1 - GENERAL

1.01 GENERAL

This Section provides definition of terms cited in the Contract Documents.

1.02 DEFINITION OF TERMS

A. Wherever in the specifications and other Contract Documents, the following terms and abbreviations or pronouns in place of them, are used, the intent and meaning shall be interpreted as provided in this section unless the context otherwise requires.

1. Quality Assurance (QA): The process by which the OCTA Project Manager elects to monitor and assure that it receives proper construction related documentation from the Contractor. QA procedures measure the setting of schedules for the receipt and review of documentation and the quality of the information contained within the documentation.

2. Quality Control (QC): The process by which the OCTA Project Manager receives documentation from the Contractor that proves that the Contractor is providing the contractually mandated services, such as training, testing and inspection. Contractor must show evidence of internal procedures demonstrating how he will perform these mandated functions and submit documentation that QC verifications have been completed. QC is the responsibility of the Contractor.

3. Roadway Worker: Any OCTA Project Manager or Contractor employee whose duties include inspection, construction, roadway facilities or roadway machinery within the OCTA and/or City right of way.

4. Salvage: To save any removed item. The salvaged item shall be reused in the contract or delivered and stockpiled for the OCTA Project Manager as specified in the Contract Documents.

5. Site Specific Work Plan (SSWP): A program, plan, and schedule prepared and submitted by the Contractor and approved by the OCTA Project Manager that accurately describes and illustrates the manner in which work within the operating envelope will be accomplished, the impacts on any elements of the Operating System and the manner in which work will be accomplished with the OCTA Project Manager allotted work windows.

6. Project Applicant: all references made by City, local agencies, or other agencies to Project Applicant means the Contractor and not OCTA.

7. Provide: To furnish/supply and install equipment/materials by Contractor per Contract documents.

PART 2 – PRODUCTS

Not Used.

PART 3 – EXECUTION

Not Used.

PART 4 – MEASUREMENT AND PAYMENT

No separate measurement or payment shall be made under this Section.

END OF SECTION

SECTION 01 43 00

QUALITY ASSURANCE

PART 1 - GENERAL

1.01 SUMMARY

A. Section Includes: Administrative and procedural requirements for quality assurance.

1. Specific quality assurance requirements for individual construction activities are specified in the sections that specify those activities. Requirements in those sections may also cover production of standard products.

2. Requirements for Contractor to provide quality assurance services required by OCTA, or authorities having jurisdiction are not limited by provisions of this section.

B. Related Sections:

1. Section 01 43 01, Contractor Qualifications and Requirements.

2. Section 01 45 00, Quality Control.

1.02 DEFINITIONS

A. Quality Assurance Services: Activities, actions, and procedures performed before and during execution of the work to guard against defects and deficiencies and substantiate that proposed construction will comply with requirements.

B. Quality Control Services: Tests, inspections, procedures, and related actions during and after execution of the work to evaluate that actual products incorporated into the work and completed construction comply with requirements. Refer to Section 01 45 00, Quality Control.

C. Mockups: Full-size, physical assemblies that are constructed on-site. Mockups are used to verify selections made under sample submittals, to demonstrate aesthetic effects and, where indicated, qualities of materials and execution, and to review construction, coordination, testing, or operation; they are not samples. Approved mockups establish the standard by which the work will be judged.

D. Installer/Applicator/Erector: Contractor or another entity engaged by Contractor as an employee, subcontractor, or sub-subcontractor, to perform a particular construction operation, including installation, erection, application, and similar operations.

1. Using a term such as "carpentry" does not imply that certain construction activities must be performed by accredited or unionized individuals of a

corresponding generic name, such as "carpenter." It also does not imply that requirements specified apply exclusively to trades people of the corresponding generic name.

E. Experienced: When used with an entity, "experienced" means having successfully completed a minimum of five previous projects similar in size and scope to this project; having a minimum of five years' experience in work similar to that required for this project; being familiar with special requirements indicated; and having complied with requirements of authorities having jurisdiction.

1.03 CONFLICTING REQUIREMENTS

A. General: If compliance with two or more standards is specified and the standards establish different or conflicting requirements for minimum quantities or quality levels, comply with the most stringent requirement. Refer uncertainties and requirements that are different, but apparently equal, to OCTA for a decision before proceeding.

B. Minimum Quantity or Quality Levels: The quantity or quality level shown or specified shall be the minimum provided or performed. The actual installation may comply exactly with the minimum quantity or quality specified, or it may exceed the minimum within reasonable limits. To comply with these requirements, indicated numeric values are minimum or maximum, as appropriate, for the context of requirements. Refer uncertainties to OCTA for a decision before proceeding.

1.04 QUALITY ASSURANCE

A. General: Qualifications paragraphs in this article establish the minimum qualification levels required; individual specification sections specify additional requirements.

B. Installer Qualifications: A firm or individual experienced (as defined above) in installing, erecting, or assembling work similar in material, design, and extent to that indicated for this project, whose work has resulted in construction with a record of successful in-service performance.

C. Manufacturer Qualifications: A firm experienced (as defined above) in manufacturing products or systems similar to those indicated for this project and with a record of successful in-service performance, as well as sufficient production capacity to produce required units.

D. Fabricator Qualifications: A firm experienced (as defined above) in producing products similar to those indicated for this project and with a record of successful in-service performance, as well as sufficient production capacity to produce required units.

E. Professional Engineer Qualifications: A professional engineer who is legally qualified to practice in jurisdiction where project is located and who is experienced (as defined above) in providing engineering services of the kind indicated. Engineering services

are defined as those performed for installations of the system, assembly, or product which are similar to those indicated for this project in material, design, and extent.

F. Specialists: Certain sections of the specifications require that specific construction activities shall be performed by entities who are recognized experts in those operations. Specialists shall satisfy qualification requirements indicated and shall be engaged for the activities indicated.

1. Requirement for specialists shall not supersede building codes and regulations governing the work.

G. Testing Agency Qualifications: An NRTL, an NVLAP, or an independent agency with the experience and capability to conduct testing and inspecting indicated, as documented by a recognized OCTA; and with additional qualifications specified in individual sections; and where required by authorities having jurisdiction, that is acceptable to authorities.

1. NRTL: A nationally recognized testing laboratory according to 29 CFR 1910.7.

2. NVLAP: A testing agency accredited according to NIST's National Voluntary Laboratory Accreditation Program.

H. Factory-Authorized Service Representative Qualifications: An authorized representative of manufacturer who is trained and approved by manufacturer to inspect installation of manufacturer's products that are similar in material, design, and extent to those indicated for this project.

I. Preconstruction Testing: Where testing agency is indicated to perform preconstruction testing for compliance with specified requirements for performance and test methods, comply with the following:

1. Contractor responsibilities include the following:

a. Provide test specimens representative of proposed products and construction.

b. Submit specimens in a timely manner with sufficient time for testing and analyzing results to prevent delaying the work.

c. Provide sizes and configurations of test assemblies, mockups, and laboratory mockups to adequately demonstrate capability of products to comply with performance requirements.

d. Build site-assembled test assemblies and mockups, where indicated, using installers who will perform same tasks for Project.

e. Build laboratory mockups at testing facility using personnel, products, and methods of construction indicated for the completed work.

f. When testing is complete, remove test specimens, assemblies, mockups, and laboratory mockups; do not reuse products on project.

2. Testing Agency Responsibilities: Submit a certified written report of each test, inspection, and similar quality-assurance service to OCTA, with copy to Contractor. Interpret tests and inspections and state in each report whether tested and inspected work complies with or deviates from the contract documents.

J. Mockups: Before installing portions of the work requiring mockups, build mockups for each form of construction and finish required to comply with the following requirements, using materials indicated for the completed work:

1. Build mockups in location and of size indicated or, if not indicated, as directed by OCTA.

2. Notify OCTA seven days in advance of dates and times when mockups will be constructed.

3. Demonstrate the proposed range of aesthetic effects and workmanship.

4. Obtain OCTA's approval of mockups before starting work, fabrication, or construction.

5. Allow seven days for initial review and each re-review of each mockup.

6. Maintain mockups during construction in an undisturbed condition as a standard for judging the completed work.

7. Demolish and remove mockups when directed, unless otherwise indicated.

K. OCTA Quality Assurance Inspection and Testing:

1. The Authority will select and pay for an independent testing and inspection laboratory or agency, to conduct test and inspection for quality assurance purposes. Contractor is fully responsible for all quality control testing and inspection as required on contract drawings and/or specifications, required by AHJ, and as standard industry practice.

2. Contractor shall coordinate and notify OCTA when work is ready for quality assurance testing and inspection.

3. Contractor shall provide OCTA Project Manager, independent testing and inspection personnel, and OCTA’s Consultant with full access to the work and reasonable time for inspection for ascertaining whether or not the work is performed in accordance with the requirements and intent of the contract. No work shall be covered and no materials shall be installed without making the work and materials available for inspection by OCTA.

If OCTA Project Manager so requests, Contractor shall, at any time before acceptance of the work, remove and uncover such portions of the finished work as may be directed for quality assurance testing and inspection.

4. After quality assurance testing and inspection, Contractor shall restore the work to the standard required by the contract document.

5. Costs for additional tests, inspection and related services, due to the following, shall be reimbursed to the Authority by the Contractor and no change in Contract Time shall result.

   a. Failure to properly schedule or notify OCTA for testing and inspection.
   b. Changes in sources, lots or suppliers of products after original quality assurance tests or inspections.
   c. Changes in means, methods, techniques, sequences and procedures of constructions which necessitate additional testing, inspections, and additional services.
   d. Changes in materials after review and acceptance of submittals.

PART 2 - PRODUCTS

Not Used

PART 3 – EXECUTION

Not Used

PART 4 - MEASUREMENT AND PAYMENT

No separate measurement will be made for the work of this section.

END OF SECTION

SECTION 01 43 01

CONTRACTOR QUALIFICATIONS AND REQUIREMENTS

PART 1 – GENERAL

1.01 CONTRACTOR DUTIES

A. Except as specifically noted otherwise, provide:

1. A Construction Project Manager, who shall serve as the Contractor's Representative for the Contract, at or beyond the requirements described in this section.

2. Other labor, supervision, and materials required for the work.

3. Other tools, equipment, and machinery required for the work.

4. Water, heat, and utilities required for the work.

5. Support facilities and services, including fully furnished field office facilities, necessary for the proper execution and completion of the work.

B. Pay legally required sales, consumer, and use taxes.

C. Secure and pay for fees, surcharges, taxes, permits, and licenses necessary for the proper execution of the work.

1.02 REFERENCE STANDARDS

A. OSHA: Occupational Safety and Health Administration regulations.

1.03 CONSTRUCTION PROJECT MANAGER

A. Provide for the work a Construction Project Manager who will manage and coordinate the overall aspects of the work. The Construction Project Manager's qualifications and experience shall include:

1. A minimum of five years of progressing work responsible experience on public works construction projects that include coordination, and scopes, types, and characters of work directly related to the scope of work of this contract.

2. Demonstrated ability to work safely and supervise individuals in safe work.

3. Previous positions and experience supervising and planning work activities of construction superintendents, project engineers, and support personnel foreman and crews.

4. Ability to read and understand survey, grading, paving, striping, utility, and structural plans.

5. Ability to develop and work from construction schedules.

B. The Construction Project Manager must:

1. Visit the site daily during the work to verify the work is proceeding per contract documents.

2. Be on the job during the work week to manage and coordinate all aspects of work for the full duration of the project.

3. Be able to respond immediately to emergency or problem calls, 24 hours a day, 7 days a week.

C. The Construction Project Manager shall have the necessary authority to provide instructions and orders to his authorized representatives. The Construction Project Manager shall not be replaced without advance approval by the OCTA Project Manager; OCTA Project Manager will have sole approval of the replacement. The Contractor may propose a supervisory personnel such as superintendent to serve as Construction Project Manager.

1.04 SITE SAFETY REPRESENTATIVE

A. Provide Site Safety Representative.

B. Site Safety Representative qualifications and experience must include:

1. Meeting qualifications set forth in the General Provision. Pass OCTA Level 3 Health, Safety and Environmental Requirements.

C. The Site Safety Representative must be headquartered for the duration of the project at Contractor's construction field office. .

D. The Site Safety Representative will be required to train and test Contractor's employees as described in Section 01 35 23, Owner Safety Requirements.

1.05 SUBMITTALS

A. Contractor shall submit for OCTA Project Manager's approval the name and professional history of each of the key positions identified in this specification section.

PART 2 – PRODUCTS

Not Used

PART 3 – EXECUTION

3.01 PERSONNEL QUALIFICATION

A. Within five calendar days after Notice to Proceed, submit to OCTA Project Manager resumes of personnel listed above in Part 1 above. Each resume shall provide sufficient detail to demonstrate compliance with requirements. Submit a schedule showing, for each employee classification, number of personnel to be assigned to the work and duration of their assignments.

B. The OCTA Project Manager will review resumes to determine acceptability of qualifications and experience. The OCTA Project Manager's decision is final. Do not resubmit resumes of personnel deemed unacceptable by the OCTA Project Manager.

C. Substitutions: To replace any personnel identified in Part 1, follow this section's procedures for obtaining approval of the original personnel. This qualification process, shall be completed before the vacancy occurs. Provision for substitutions does not relieve Contractor of the responsibility to provide personnel as provided in Part 1.

PART 4 – MEASUREMENT AND PAYMENT

No separate measurement or payment will be made for work of this section.

END OF SECTION

THIS PAGE DELIBERATELY LEFT BLANK

SECTION 01 45 00

QUALITY CONTROL

PART 1 – GENERAL

1.01 SUMMARY

A. Section Includes:

1. Authority of OCTA Project Manager.
2. Responsibilities of the Contractor.
3. Inspection and testing by OCTA Project Manager.

B. Related Sections:

1. Section 01 14 23, Coordination with OCTA and Local Agencies.
2. Section 01 33 00, Submittal Procedures.
3. Section 01 41 00, Regulatory Requirements.
4. Section 01 43 00, Quality Assurance.
5. Section 01 60 00, Product Requirements.

1.02 AUTHORITY OF OCTA PROJECT MANAGER

A. OCTA Project Manager will determine whether the work is completed in accordance with the contract documents. OCTA Project Manager will decide all questions that may arise as to the quality or acceptability of materials furnished and work performed, and interpretations of the contract documents.

B. OCTA Project Manager may require the Contractor to finish a section on which work is in progress before work is started on any additional section. Refer to Section 01 14 22, Rules and Hours of Operation for requirements.

C. OCTA Project Manager may require the Contractor to submit additional shop drawings or documents to demonstrate the Contractor's understanding the intents of contract plans and specifications as part of quality control.

1.03 REFERENCES

A. ASTM D3740 - Practice for Evaluation of Agencies Engaged in Testing and/or Inspection Used in Engineering Design and Construction.

1.04 REGULATORY REQUIREMENTS FOR TESTING AND INSPECTION

A. Regulatory Requirements for Testing and Inspection: Inspections, testing and approvals as required by authorities having jurisdiction. Refer to Section 01060 - Regulatory Requirements.

1. California Code of Regulations (CCR) - Title 24, State Building Code (Uniform Building Code with State of California Amendments), latest edition, as adopted and interpreted by authorities having jurisdiction.

2. California Code of Regulations (CCR) - Title 22, Sections 94065, 94067 and 94069.

1.05 RESPONSIBILITIES OF THE CONTRACTOR

A. Cooperate with OCTA Project Manager and with other contractors as detailed in Section 01 14 23, Coordination with OCTA and Local Agencies.

B. Ensure that products, services, workmanship and site conditions comply with requirements of the Drawings and Specifications by coordinating, supervising, testing and inspecting the Work and by utilizing only suitably qualified personnel.

C. Perform the work to achieve the level of quality prescribed in the contract documents, including by reference, all Codes, laws, rules, regulations and standards. The no quality basic is prescribed, the quality shall be in accordance with the best accepted practices of the construction industry for the locale of the Project, for projects of this type.

D. Perform the work in the proper sequence in relation to the requirements of the OCTA and other contractors, all as may be directed by OCTA Project Manager.

E. Employ and assign knowledgeable and skilled personnel as necessary to perform quality control functions to ensure that the Work is provided as required.

F. Be responsible for any damage done by it or its agents to the work performed by the OCTA or another contractor.

1.06 SUPERVISION AND CONSTRUCTION PROCEDURES

A. Give the work the constant attention necessary to facilitate the progress of the work.

B. Be solely responsible for all construction means, methods, techniques, and procedures and for coordinating all portions of the work under the contract. Permission given by OCTA Project Manager to use any particular methods, equipment, or appliances shall not be construed to relieve the Contractor from furnishing other equipment or other appliances or adopting other methods when those in use prove unsatisfactory, or as to bind OCTA Project Manager to accept work which does not comply with the contract.

C. Immediately remove from the work, when so ordered by OCTA Project Manager, and do not re-employ on any of the work, without written permission from OCTA Project Manager, any contractor or subcontractor employee doing unsafe, improper, or defective work; who, in OCTA Project Manager's judgment, refuses or neglects the direction of OCTA Project Manager given to the Contractor; who is deemed incompetent or disorderly; or who commits trespassing on public or private property in the vicinity of the work.

D. Be responsible for securing all work areas by barricade in accordance with local and State requirements as applicable at the end of each day.

1.07 QUALITY OF THE WORK

A. Quality of Products: Unless otherwise indicated or specified, all products shall be new, free of defects and fit for the intended use.

B. Quality of Installation: All Work shall be produced plumb, level, square and true, or true to indicated angle, and with proper alignment and relationship between the various elements. New material shall be installed so that drainage merges with existing flow patterns on the site towards the drains.

C. Protection of Existing and Completed Work: Take all measures necessary to preserve and protect existing and completed Work free from damage, deterioration, soiling and staining, until Acceptance by the Authority.

D. Standards and Code Compliance and Manufacturer's Instructions and Recommendations: Unless more stringent requirements are indicated or specified, comply with manufacturer's instructions and recommendations, reference standards and building code research report requirements in preparing, fabricating, erecting, installing, applying, connecting and finishing Work.

E. Deviations from Standards and Code Compliance and Manufacturer's Instructions and Recommendations: Document and explain all deviations from reference standards and building code research report requirements and manufacturer's product installation instructions and recommendations, including acknowledgement by the manufacturer that such deviations are acceptable and appropriate for the Project.

F. Verification of Quality: Work shall be subject to verification of quality by the Authority or Engineer in accordance with provisions of the Conditions of the Contract.

1. Contractor shall cooperate by making Work available for inspection by the Authority or Engineer or their designated representative.

2. Such verification may include mill, plant, shop, or field inspection as required. OCTA designated Inspector shall access to material inspection.

3. Provide access to all parts of the Work, including plants where materials or equipment are manufactured or fabricated.

4. Provide all information and assistance as required, including that by and from subcontractors, fabricators, materials suppliers and manufacturers, for verification of quality by the Authority or Engineer.

5. Contract modifications, if any, resulting from such verification activities shall be governed by applicable provisions in the Conditions of the Contract.

G. Observations by the Engineer and Engineer's Consultants: Periodic and occasional observations of Work in progress may be made by the Engineer and Engineer's consultants as deemed necessary to review progress of Work and general conformance with design intent.

H. Limitations on Inspection, Test and Observations: Neither employment of an Inspector of Record, independent testing and inspection agency, or observations by the Engineer and Engineer's consultants shall in no way relieve Contractor of obligation to perform Work in full conformance to all requirements of Contract Documents and applicable Building Code and other regulatory requirements.

I. The Engineer's Acceptance and Rejection of Work: The Engineer reserves the right to reject all Work not in conformance to the requirements of the Drawings and Specifications.

J. Correction of Non-Conforming Work: Non-conforming Work shall be modified, replaced, repaired or redone by the Contractor at no change in Contract Sum or Contract Time.

K. Acceptance of Non-Conforming Work: Acceptance of non-conforming Work, without specific written acknowledgement and approval of the Authority, shall not relieve the Contractor of the obligation to correct such Work.

L. Contract Adjustment for Non-conforming Work: Should the Authority or Engineer determine that it is not feasible or in Authority's interest to require non-conforming

Work to be repaired or replaced, an equitable reduction in Contract Sum shall be made by agreement between the Authority and Contractor. If equitable amount cannot be agreed upon, a Construction Change Directive will be issued and the amount in dispute resolved in accordance with the Conditions of the Contract.

M. Non-Responsibility for Non-Conforming Work: The Engineer and the Engineer's consultants disclaim any and all responsibility for Work produced not in conformance with the Drawings and Specifications.

1.08 INSPECTION AND TESTING

A. The work is to be completed in accordance with the specifications, the drawings, and such instructions or directions as OCTA Project Manager may give to supplement drawings and specifications. Wherever the words "directed," "permitted," "approved," "acceptable," "satisfactory to," or similar words or phrases occur in the contract documents, they shall be understood to be functions of OCTA Project Manager to be exercised at his discretion.

B. The OCTA shall not be responsible for and shall not have control or charge over the acts or omissions of the Contractor, subcontractors, or any of their agents or employees, or any other persons performing any of the work.

C. Inspections and Tests by Authorities Having Jurisdiction: Contractor shall cause all tests and inspections required by authorities having jurisdiction to be made for Work under this Contract, Public Works Department, Fire Department, Health Department, AQMD, SCE and similar agencies. Except as specifically noted, scheduling, conducting and paying for such inspections shall be solely the Contractor's responsibility.

D. Inspections and Tests by Serving Utilities: Contractor shall cause all tests and inspections required by serving utilities to be made for Work under this Contract. Scheduling, conducting and paying for such inspections shall be solely the Contractor's responsibility.

E. Inspections and Tests by Manufacturer's Representatives: Contractor shall cause all tests and inspections specified to be conducted by materials or systems manufacturers to be made. Additionally, all tests and inspections required by materials or systems manufacturers as conditions of warranty or certification of Work shall be made, the cost of which shall be included in the Contract Sum.

1. Test and Inspection Reports: After each inspection and test, one copy of report shall be promptly submitted to the Engineer, Engineer's consultant (as applicable), Authority, Contractor, City Inspector, and to agency having jurisdiction (if required by Code).

   a. Reports shall clearly identify the following:

      Date issued.
      Project name and number.

Identification of product and Specifications Section in which Work is specified.
Name of inspector.
Date and time of sampling or inspection.
Location in Project where sampling or inspection was conducted.
Type of inspection or test.
Date of test.
Results of tests.
Comments concerning conformance with Contract Documents and other requirements.

b. Test reports shall indicate specified or required values and shall include statement whether test results indicate satisfactory performance of products.

c. Samples taken, but not tested, shall be reported.

d. Test reports shall confirm that methods used for sampling and testing conform to specified test procedures.

F. Contractor shall provide OCTA Project Manager, independent testing and inspection agency personnel, inspector of record and OCTA's consultant with full access to the work and reasonable time for inspection for ascertaining whether or not the work is performed in accordance with the requirements and intent of the contract. No work shall be covered or materials used without making the work or materials available for inspection by OCTA Project Manager. If OCTA Project Manager so requests, the Contractor shall, at any time before acceptance of the work, remove or uncover such portions of the finished work as may be directed.

G. After examination, Contractor shall restore the work to the standard required by the contract documents. Inspection will not relieve the Contractor from the responsibility for the quality of this work and to perform the work in accordance with the requirements of the contract documents.

H. All materials and every process of manufacture and construction shall be subject to inspection at all times. OCTA Project Manager and his designated representatives shall have free access to all operations. Contractor shall provide necessary materials and OCTA Project Manager shall have the right to select suitable samples of materials for testing or examination which the contractor shall supply without charge. In case such samples must be shipped to some other point for inspection or testing, Contractor shall box or crate samples as necessary and shall deliver them at points designated for shipment without charge. Omission of inspection shall not relieve the Contractor of its obligations to produce the work required by the contract documents. Materials not in compliance with contract requirements shall be removed promptly from the vicinity of the work, and the Contractor, at its expense, shall promptly remove, reconstruct, replace, and make good any defective work as directed in writing by OCTA Project Manager. Oversight or error in judgment of inspectors, or previous acceptance of the work, shall not relieve Contractor from the obligation to correct defects whenever discovered.

I. If the Contractor does not correct nonconforming work or remove rejected materials within a reasonable time fixed by written notice, OCTA Project Manager may direct

that removals and corrections be performed by other contractors. Charges for such removals and corrections shall be deducted from the Contractor's payment due under this contract or may be paid for by the Contractor's bonds held for this contract.

J. All inspection by OCTA Project Manager is for the protection of the OCTA and its interest and shall not relieve the Contractor of responsibility for providing work in accordance with the contract documents. After completion of the work, a final inspection will be made and any previous inspection or acceptance will not preclude rejection at the final inspection of any item that is not satisfactory to OCTA Project Manager or is not in accordance with the contract documents.

K. If, within the period of time prescribed by law or by the terms of any applicable special warranty required by the contract documents, whichever is longer, any of the work is found to be defective or not in accordance with the contract documents, the Contractor shall correct it promptly after receipt of a written notice from OCTA Project Manager. This obligation shall survive acceptance of the work or termination of the contract. In the event the OCTA prefers to accept or not require correction of defective or nonconforming work, the OCTA may do so instead of requiring its removal and correction, in which case OCTA Project Manager shall determine an appropriate sum to be deducted from the contract price or otherwise charged against the Contractor, which determination shall be final and binding upon the parties. Such adjustment shall be effected whether or not final payment has been made.

L. All defective work which has been rejected shall be remedied or removed and replaced by the Contractor at its own expense, in a manner acceptable to OCTA Project Manager.

M. Whenever all of the work provided for in the contract or authorized as force account work has been completed and the final cleaning-up performed, OCTA Project Manager will make the final inspection, and, if the work is found to be satisfactory, Contractor will be notified in writing of the acceptance. All portions of the work shall be maintained by the Contractor at the standards required by the contract documents until final acceptance.

N. At OCTA Project Manager's discretion, portions of the work that are determined to be substantially complete may be accepted before all the project work is completed. After acceptance of substantially completed work, Contractor shall not use the finished product for any purpose without permission of OCTA Project Manager.

PART 2 – PRODUCTS

Not Used

PART 3 – EXECUTION

3.01 FIELD QUALITY CONTROL/QUALITY ASSURANCE

A. Give minimum of 48 hour advance notice of each test and inspection to OCTA Project Manager when ready for testing, observation and inspection.

B. Should any compaction density/strength test or inspection fail to meet specification requirements, necessary corrective work shall be performed by the Contractor. Additional testing shall be required to determine that corrective work provides compaction in the failed area meeting requirements of these Specifications.

C. Contractor shall provide a record of testing results including corrective actions taken if necessary on the approved form to the OCTA Project Manager.

D. Contractor's corrective work to meet requirements and retesting resulting from failing tests shall be at no additional cost to OCTA.

E. Obtain all inspections required by the local regulatory agencies and provide the Authority with the final sign-off cards for the project from the local regulatory agencies.

PART 4 – MEASUREMENT AND PAYMENT

No separate measurement or payment shall be made under this section.

END OF SECTION

SECTION 01 50 00

TEMPORARY FACILITIES AND CONTROLS

PART 1 - GENERAL

1.01 SUMMARY

A. Section Includes:

1. Temporary facilities and controls used during construction.

B. Related Sections:

1. Section 01 14 25, Procedures in Construction.
2. Section 01 14 27, Legal Relations and Responsibility.
3. Section 01 14 43, Environmental Resource Protection.
4. Section 01 71 13, Mobilization and Demobilization
5. Section 01 74 19, Construction Waste Management and Disposal.

1.02 SUBMITTALS

A. Submit in accordance with Section 01 33 00, Submittal Procedures.

B. Site Plans: Show temporary facilities, utility hookups, staging areas, and parking areas for construction personnel.

C. Moisture Protection Plan: Describe procedures and controls for: protecting materials and construction from water absorption and damage, including delivery, handling, and storage; discarding water-damage materials; protocols for mitigation of water into completed work; and replacing water-damaged work.

1.03 QUALITY ASSURANCE

A. Tests and Inspections: Arrange for authorities having jurisdiction to test and inspect each temporary utility before use. Obtain required certifications and permits.

PART 2 - PRODUCTS

2.01 TEMPORARY FACILITIES, PRODUCTS, AND CONTROL

A. Common-Use Field Office: not required.

B. Storage and Fabrication Sheds: No equipment or tools are allowed to be stored at the jobsite without the OCTA Project Manager's written permission. If on-site storage is permitted, provide access and orderly provision for maintenance and for inspection of products.

C. Telephone Service: Provide mobile telephone service for project superintendent.

D. Temporary Electricity:

1. Connect to existing power service at location as directed. Power consumption shall not disrupt Owner's need for continuous service. Exercise measures to conserve energy.

2. Provide power outlets for construction operations, with branch wiring and distribution boxes. Provide flexible power cords as required.

3. Provide main service disconnect and over current protection at convenient location.

4. Comply with NECA, NEMA, and UL standards and regulations for temporary electric service.

5. Permanent convenience receptacles may be utilized during construction.

E. Temporary Fire Protection:

1. Maintain temporary fire protection facilities of the types needed until permanent facilities are installed. Fire Extinguishers shall be portable, UL rated; with class and extinguishing agent as required by locations and classes of fire exposures.

2. Comply with NFPA 10 "Standard for Portable Fire Extinguishers" and NFPA 241 "Standard for Safeguarding Construction, Alterations, and Demolition Operations".

3. Fire safety during construction shall comply with CFC - California Fire Code (CCR) California Code of Regulations, Title 24, Part 9, Article 87.

4. Store combustible materials in containers in fire-safe locations.

5. Maintain unobstructed access to fire extinguishers, fire hydrants, temporary fire-protection facilities, stairways, and other access routes.

6. Provide supervision of welding operations, combustion-type temporary heating units, and similar sources of fire ignition.

F. Barriers, enclosures and fencing:

1. Provide traffic cones to prevent unauthorized entry to construction areas and to protect existing facilities and adjacent properties from damage from construction operations.

2. Provide protection for plant life and trees designated to remain and for soft and hardscape areas adjacent to work, replace damaged materials in kind.

3. Protect non-owned vehicular traffic, stored materials, if allowed, site and structures from damage.

G. Noise Control: Provide methods, means, and facilities to minimize noise produced by construction operations.

H. Pollution Control:

1. Provide methods, means, and facilities to prevent contamination of soil, water, and atmosphere from discharge of noxious, toxic substances, and pollutants produced by construction operations.

2. Conform to Best Management Practices for waste management and material controls as defined in Section 4 of the Construction Activity Handbook published by the Storm Water Quality Association.

3. Coordinate construction activities with control procedures established in the Storm Water Pollution Prevention Plan (SWPPP).

I. Security:

1. Provide security and facilities to protect Work, from unauthorized entry, vandalism, or theft.

2. Coordinate with Owner's security program.

J. Parking: No Contractor's employees' parking is allowed on site.

K. Traffic Control:

1. Comply with requirements of authorities having jurisdiction.

2. Obtain all required permits, provide all materials and maintain controls as required of authorities having jurisdiction.

3. Maintain access for fire-fighting equipment and access to hydrants.

L. Progress Cleaning:

1. Remove debris and rubbish from pipe chases, plenums, attics, crawl spaces, and other closed or remote spaces, prior to enclosing the space.

2. Broom and vacuum clean interior areas prior to start of surface finishing, and continue cleaning to eliminate dust.

3. Provide walk-off mats at each building entry affected by construction activities.

M. Waste Disposal:

1. Waste Management: In compliance with City regulations.

2. Maintain work areas free of waste materials, debris, and rubbish.

3. Remove waste materials, debris, and rubbish from site periodically during a work day and legally dispose of off-site at the end of each work day at 3:30 pm.

4. Maintain site area in a clean and orderly condition.

PART 3 - EXECUTION

3.01 INSTALLATION, GENERAL

A. Locate facilities where they will serve project adequately and result in minimum interference with performance of the work. Relocate and modify facilities as required by progress of the work.

1. Locate facilities to avoid protected areas as specified in Section 01 14 43, Environmental Resource Protection.

3.02 TEMPORARY UTILITIES

A. Provide and pay for temporary utility services and facilities such as sanitary facilities, telephone service and internet service adequate for construction and related activities.

3.03 TEMPORARY ROADS, PAVING, PARKING, AND SIMILAR IMPROVEMENTS, AND USE OF SITE

A. See Section 01 14 25, Procedures in Construction.

B. See Section 01 14 27, Legal Relations and Responsibility

3.04 PROTECTION OF AIR AND WATER RESOURCES AND OTHER ENVIRONMENTAL RESOURCES

A. See Section 01 14 25, Procedures in Construction.

B. See Section 01 14 27, Legal Relations and Responsibility.

C. See Section 01 14 43, Environmental Resource Protection.

3.05 CONSTRUCTION WASTE

A. See Section 01 74 19, Construction Waste Management and Disposal.

3.06 SECURITY AND FIRE PROTECTION

A. See Section 01 14 27, Legal Relations and Responsibility.

PART 4 - MEASUREMENT AND PAYMENT

Work of this section is incidental to other work and no separate measurement or payment will be made.

END OF SECTION

THIS PAGE DELIBERATELY LEFT BLANK

SECTION 01 57 13

TEMPORARY EROSION AND SEDIMENTATION CONTROL

PART 1 - GENERAL

1.01 SUMMARY

A. Section Includes:

1. Temporary erosion and sedimentation control.
2. Accessories required for a complete installation.

B. Related Sections:

1. Section 01 14 25, Procedures in Construction.
2. Section 01 50 00, Temporary Facilities and Controls.
3. Section 01 14 43, Environmental Resource Protection

1.02 REFERENCE STANDARDS

A. Caltrans: State of California Department of Transportation, Standard Specifications.

B. Standard Specifications for Public Works Construction (SSPWC).

C. California Stormwater Quality Association (CASQA)

1.03 SUBMITTALS

A. Submit in accordance with Section 01 33 00, Submittal Procedures.

B. Working drawings and data on proposed straw bales and fiber rolls, including physical properties of various products.

1.04 DELIVERY, STORAGE, AND HANDLING

A. Deliver, handle, and store materials in accordance with recommendations of manufacturer.

PART 2 - PRODUCTS

2.01 MATERIALS

A. Miscellaneous Materials:

1. Plastic sheeting: Clear polyethylene plastic sheeting at least 10 mils thick, secured with anchor restrainers (gravel filled bags) per the Construction Best Management Practices (BMP) handbook prepared by the California Stormwater Quality Association (CASQA), *www.cabmphandbooks.com*.

2. Temporary Fiber Rolls and Straw Bales: Provide fiber rolls and straw bales with staking per the Construction BMP handbook prepared by the CASQA, *www.cabmphandbooks.com* . If staking is not feasible, contractor shall develop other suitable methods of anchoring that will be acceptable to OCFCD.

3. Temporary concrete washout facility, per the Construction BMP handbook prepared by the CASQA, *www.cabmphandbooks.com.*

4. Gravel bags per the Construction BMP handbook prepared by the CASQA, www.cabmphandbooks.com

PART 3 - EXECUTION

3.01 GENERAL

A. Conform to all applicable local, state and Federal Regulations and laws pertaining to water pollution control and as specified in SSPWC section 7-8.6.

B. Accomplish erosion and sediment control through use of berms, dikes, swales, dams, fiber mats, plastic sheeting, netting, gravel, storm drain inlet protection, slope drains, sediment fences, and other sediment barriers; gravel construction entrances; and other erosion control devices or methods. Cover material stockpiles with plastic sheeting.

C. Coordinate temporary pollution control provisions with permanent erosion control features specified elsewhere in the contract documents to the extent practicable to assure economical, effective, and continuous erosion control throughout the construction and post-construction period.

D. OCTA Project Manager may limit surface area of erodible earth material exposed by clearing, grubbing, excavation, borrow, embankment, and fill operations

1. Provide immediate, permanent or temporary pollution control measures to prevent contamination of adjacent streams or other watercourses, lakes, ponds, or other areas of water impoundment.

2. Work may involve construction of temporary berms, dikes, dams, sediment basins, and slope drains; use of temporary mats; or other control devices or methods as necessary to control erosion.

E. Construct facilities required for clearing, grading, and land alteration activities, to ensure that sediment-laden water does not enter drainage systems or violate applicable water standards. Conform to requirements of Section 01 14 43, Environmental Resource Protection.

F. Permanent Features:

1. Incorporate permanent erosion control features at earliest practicable time. Use temporary pollution control measures to correct unforeseen conditions that develop during construction, to provide measures that are needed prior to installation of permanent pollution control features, or to temporarily control erosion that develops during normal construction.

2. Where erosion interferes with clearing and grubbing operations, schedule and perform work so that grading operations and permanent erosion control features can follow immediately; otherwise, provide temporary erosion control measures between successive construction stages.

G. Areas of Work:

1. Limit the area of clearing, grubbing, excavation, borrow, and embankment operations in progress commensurate with progress. Should seasonal limitations result in unrealistic coordination of operations, take temporary erosion control measures immediately.

2. Flag boundaries of clearing limits prior to construction.

a. Do not disturb or permit disturbance of ground beyond flagged boundary. Conform to requirements of Section 01 14 43, Environmental Resource Protection

b. Maintain flagging for duration of work.

3. Temporary soil erosion and sediment control may include construction work outside right of way where work is necessary as a result of project construction such as borrow pit operations, haul roads, and equipment storage sites.

H. Maintenance:

1. Maintain erosion control features installed, including replacement and upgrading of facilities when needed, until work is completed and notice of Final Acceptance issued.

2. Maintain catch basins (inlets with sumps or inverted siphons) so that not more than one foot depth of sediment is allowed to accumulate within a trap (or sump).

a. Clean catch basins and storm drains prior to paving and prior to Substantial Completion.

b. Remove sediment. Do not flush sediment-laden water into downstream system.

3. Keep paved areas clean for the duration of the project.

4. Measures in addition to those indicated may be required.

5. Do not permit more than a one-foot depth of sediment to accumulate behind a silt fence.

a. Remove sediment or regrade it into slopes, and repair and reestablish silt fences as needed.

6. Remove silt fences in entirety when no longer required. Fences are required until uphill area has been permanently stabilized.

7. Remove pipes, end sections, drainage curbs, silt fences, and other materials from temporary erosion control devices; those not incorporated into permanent work become property of Contractor.

3.02 STORM DRAIN INLET PROTECTION

A. Storm drain inlet protection must prevent sediment from entering storm drain systems prior to permanent stabilization of disturbed areas.

B. Use storm drain inlet protection per the Construction BMP handbook prepared by the CASQA, *www.cabmphandbooks.com*:

1. Where storm drain inlets are operational before permanent stabilization of disturbed drainage area.

2. Adjacent to and immediately downhill of utility type construction in existing paved areas with catch basin drainage.

3. When cleaning streets.

C. Use berms when required to direct drainage to flow through filters and prevent bypassing of inlets.

D. Do not permit more than one-foot depth of sediment to accumulate against storm drain inlet protection.

1. Remove sediment and restore inlet protection as needed to maintain sediment trapping and filtering capability.

PART 4 - MEASUREMENT AND PAYMENT

No separate measurement or payment will be made for the work of this section.

END OF SECTION

THIS PAGE DELIBERALLY LEFT BLANK

SECTION 01 60 00

PRODUCT REQUIREMENTS

PART 1 - GENERAL

1.01 SUMMARY

A. This section includes administrative and procedural requirements for selection of products for use in the project; product delivery, storage, and handling.

1.02 SOURCE OF SUPPLY AND QUALITY OF MATERIALS

A. OCTA Project Manager shall approve the source of supply of each of the materials supplied by the Contractor before the purchase or delivery of materials to the work site. Promptly after receiving the Contract award, the Contractor shall notify OCTA Project Manager of all proposed material sources. If it is found after trial that sources of supply previously approved do not produce uniform and satisfactory products, or if the product from any source proves unacceptable at any time, the Contractor shall furnish materials from other sources as approved by OCTA Project Manager.

B. Only materials conforming to Specifications and approved in advance by OCTA Project Manager shall be used in the work. All material being used shall be subject to inspection or test at any time during their preparation or use. No material that after approval has in any way become unfit for use shall be used in the Work.

1.03 UNLOADING, HAULING AND STORING MATERIALS

A. The Contractor shall, at its expense, deliver, unload, store, handle, and be responsible for all materials whether furnished by the OCTA or by the Contractor.

B. Store and protect products in accordance with manufacturer's instructions, with seals and labels intact and legible.

   1. Periodically inspect to ensure products are undamaged, and are maintained under required conditions.

   2. Products damaged by improper storage or protection shall be removed and replaced with new products at no change in Contract Sum or Contract Time.

C. Store products to facilitate inspection and measurement of quantity or counting of units.

D. The unloading, storing and hauling of all the OCTA’s or Contractor's material shall be considered as incidental to contract pricing.

E. When permission to do so is given in writing by OCTA Project Manager, the Contractor may store materials and erect temporary buildings on OCTA property provided such property is not required for the OCTA's use or is not under lease to other parties.

F. Store moisture-sensitive products in a weathertight enclosure or covered with an impervious sheet covering. Provide adequate ventilation to avoid condensation. Maintain product storage within temperature and humidity ranges required by manufacturer's instructions.

   1. For exterior storage of fabricated products, place on sloped supports above ground.

   2. Store loose granular materials on solid surfaces in a well-drained area. Prevent mixing with foreign matter. Prevent material from flowing or blowing away to other areas of the site. Provide covers for sand, aggregate base, and debris so that wind does not cause it to blow away.

   3. Arrange storage to provide access for inspection. Periodically inspect to assure products are undamaged, and are maintained under required conditions.

G. All electrical and mechanical equipment shall be stored so as to be protected from rain, sun, wind, sand, dust, moisture, etc. The equipment shall be stored on supports off the ground or on concrete slabs with all factory provided dust and moisture protection left in place until equipment is installed.

H. Electrical and mechanical equipment shall be maintained in accordance with the manufacturer's operation and maintenance instructions until the Contractor is relieved of the responsibility by OCTA Project Manager.

I. Store heavy materials away from the structure in a manner that will not endanger supporting construction.

J. Building materials shall be stored in a protected environment safe from sun, rain and excessive dust. Store cementitious products and materials on elevated platforms. Damaged or excessively dirty materials will not be permitted to be installed.

K. Protection:

   1. Provide barriers, flashing lights, substantial coverings and notices to protect installed Work from traffic and subsequent construction operations.

   2. Remove protective measures when no longer required and prior to Acceptance of the Work.

L. Delivery Requirements:

   1. Schedule delivery to minimize long-term storage at project site and to prevent overcrowding of construction spaces.

2. Coordinate delivery with installation time to ensure minimum holding time for items that are flammable, hazardous, easily damaged, or sensitive to deterioration, theft, and other losses.

3. Comply with manufacturer's instructions and recommendations for transportation, delivery and handling. Provide equipment and personnel to handle products by methods to prevent soiling, marring or other damage.

4. Deliver products to project site in an undamaged condition in manufacturer's original sealed container or other packaging system, complete with manufacturer's labels and instructions for handling, storing, unpacking, protecting, and installing.

5. Contractor is responsible and shall be present at work side for receiving his material delivery at the work site. Promptly inspect products on delivery to ensure compliance with the contract documents and to ensure that products are undamaged and properly protected.

6. Contractor shall give OCTA a 48 hours notice prior to delivery of any products and materials.

1.04 PRODUCT SELECTION PROCEDURES

A. Products: Items purchased for incorporation in the Work, whether purchased for the Project or taken from previously purchase stock, and include material, equipment, assemblies, fabrications and systems.

B. General Product Requirements: Provide products that comply with the contract documents, that are undamaged and, unless otherwise indicated, that are new at time of installation.

1. It is OCTA policy that all manufactured products and supplies be provided by United States manufacturing industries in agreement with related Union organizations. Therefore in the performance of the contract, Contractor shall give United States made products preference.

2. Named Product: Items identified by manufacturer's product name, including make or model designations indicated in the manufacturer's published product data.

3. Specific Product Requirements: Refer to requirements of Section 01 45 00 - Quality Control and individual product Specifications Sections in the project specifications for specific requirements for products.

4. Materials: Products that are shaped, cut, worked, mixed, finished, refined or otherwise fabricated, processed or installed to form a part of the Work.

5. Product Completeness: Provide products complete with accessories, trim, finish, fasteners, and other items needed for a complete installation and indicated use and effect.

6. Minimum Requirements: Specified requirements for products are minimum requirements.

7. Standard Products: Where specific products are not specified, provide standard products of types that are suitable for the intended use in similar conditions and that have been produced and used successfully in similar situations on similar projects. Products shall be selected by the Contractor and subject to review and acceptance by the Engineer.

8. Code Compliance: All products, other than commodity products prescribed by Code, shall have a current ICBO Evaluation Service (ICBO ES) Research Report or CABO National Evaluation Report (NER).

9. Interchangeability: To the fullest extent possible, provide products of the same kind from a single source. Products required to be supplied in quantity shall be the same product and interchangeable throughout the Work. When options are specified for the selection of any of two or more products, the product selected shall be compatible with products previously selected.

10. Nameplates:

    a. Except for require labels and operating and safety instructions, do not attach manufacturer's identifying nameplates or trademarks on surfaces exposed to view in occupied spaces or to the exterior.

    b. Provide a permanent nameplate on each item of service-connected or power-operated equipment. Nameplates shall contain identifying information and essential operating data such as the following example:

        Name of manufacturer
        Name of product
        Model and serial number
        Capacity
        Power Characteristics
        Speed

11. OCTA reserves the right to limit selection to products with warranties not in conflict with requirements of the contract documents.

12. Where products are accompanied by the term "as selected" or similar, OCTA Engineer will make selection.

13. Where products are accompanied by the term "match sample" or similar, sample to be matched is OCTA Project Manager's.

14. Descriptive, performance, and reference standard requirements in the specifications establish salient characteristics of products.

C. General Product Selection Requirements:

1. Where products or manufacturers are identified in the specifications, the intent is not to limit competition or to restrict the work to only those products or manufacturers named. Rather, the intent is to establish the level of quality required and the product characteristics important to the success of the work. Subject to compliance with requirements, products of any manufacturer may be incorporated into the work, if shown to be equal to those listed to the satisfaction of OCTA Project Manager.

2. "Or Equal" Provision: Where "or equal", “or approved equal”, “or approved substitution”, or a similar term is included after named manufacturer(s) and product(s), equivalent products of unnamed manufacturers will be considered in accordance with requirements specified in Section 01 25 00 Substitution Procedures.

   a. Prior to submitting "Or Equal" product(s) for consideration, Contractor shall review and determine that product(s) meet or exceed the minimum quality and warranty provisions of the specified product.

   b. Cost and time considerations will be waived for products and manufacturers submitted under the "Or Equal" provision, except no increase in Contract Sum or Contract Time shall result.

   c. Contractor's attention is called to the substitution provisions of the Conditions of the Contract.

3. Products Specified by Description: Where Specifications describe a product, listing characteristics required, with or without use of a brand name, provide a product that provides the characteristics and otherwise complies with the specified requirements.

4. Products Specified by Performance Requirements: Where Specifications require compliance with performance requirements, provide product(s) that comply with performance requirements and are recommended by the manufacturer for the intended application. Verification of manufacturer's recommendations may be by product literature or by certification of performance from manufacturer.

5. Products Specified by Reference to Standards Only: Where Specifications require compliance with a standard, provided product shall fully comply with the standard specified.

6. Products Specified by Combination of Methods: Where products are specified by a combination of described characteristics, performance characteristics, reference standards and manufacturer identification, provide products conforming to all such characteristics.

7. Use of products or manufacturers, whether listed or not, is subject to demonstrated compliance with requirements of the contract documents.

D. Product Selection Procedures:

1. Basis of Design: Where products or manufacturers are identified as "basis of design" or where sizes, profiles, and dimensional requirements on drawings are based on a specific product or system, comply with provisions for comparable products to obtain approval for listed alternate products or manufacturers. Comply with provisions for substitutions to obtain approval for use of an equal unnamed product or manufacturer.

2. Specified Products: Where the specifications indicate that a product or manufacturer is to be selected from those listed, comply with the provisions for substitutions to obtain approval for use of an equal unnamed product.

3. Other Named Products: Where products or manufacturers are indicated without qualification, or with the words “or equal”, "or approved equal", “or approved substitutions”, or similar terms, comply with provisions for comparable products to obtain approval for use of an equal unnamed product.

4. Visual Matching Specification: Where specifications require matching an established sample, select a product that complies with requirements and matches Engineer's sample. OCTA Project Manager's decision will be final on whether a proposed product matches.

5. Visual Selection Specification: Where specifications include the phrase "as selected from manufacturer's colors, patterns, textures" or a similar phrase, Contractor shall select a product that complies with other specified requirements.

6. Full Range: Where specifications include the phrase "to match existing colors, patterns, textures" or similar phrase, OCTA Project Manager will select color, pattern, density, or texture from manufacturer's product line submitted by the Contractor, that includes both standard and premium items. No additional cost shall be paid to Contractor due to OCTA Project Manager’s selection of colors, pattern, density, or texture of the products.

PART 2 - PRODUCTS

Not used.

PART 3 – EXECUTION

Not Used.

PART 4 - MEASURMENT AND PAYMENT

No separate measurement or payment will be made for the work of this section.

END OF SECTION

SECTION 01 71 13

MOBILIZATION AND DEMOBILIZATION

PART 1 - GENERAL

1.01 DESCRIPTION

A. This section consists of the Contractor furnishing all transportation, labor, materials and equipment necessary and incidental to mobilization and demobilization to perform the work of this contract. Work for mobilization and demobilization as specified in this section consists of preparatory work and operations at the start of the Contract Work and removal of those items at Contract completion. Contractor shall provide written construction notices to residents and tenants adjacent to the project site per City requirements.

1.02 DEFINITIONS

A. Mobilization is operations necessary for the movement and arrival at the worksite of personnel, equipment, supplies, and appurtenances, all in ready and satisfactory working and operational order, which the Contractor intends to use for the work; for the establishment of all temporary offices and Contractor-owned structures and other temporary facilities necessary to perform the work; proper safety training of project personnel; and for incidental work and operations which must be performed prior to beginning work on the various contract items.

B. Demobilization is operations necessary for the removal of all personnel, equipment, supplies, appurtenances, Contractor-owned structures, temporary facilities, materials, and debris from the worksite and restoration of site and surrounding properties, affected by the Contractor's activities, to pre-construction conditions, as approved by OCTA Project Manager.

1.03 SUBMITTALS

A. Shop Drawing showing the installation of any pollution control/SWPPP features required for the Project to be established on the site prior to initiating construction, maintained for the duration of construction and removed upon completion of construction.

B. Copies of all required permits obtained prior to starting Work covered by the permit.

C. List of tenants that need to get the construction notice.

D. Proof from the post office that all letters (construction notices) got sent.

PART 2 - PRODUCTS

Not Used

PART 3 – EXECUTION

3.01 GENERAL

A. The Contractor shall provide personnel, equipment, temporary facilities, construction materials, tools, and supplies at the worksite at the time they are scheduled to be required.

B. The Contractor shall locate plant or equipment appropriately close to the portion of the work for which it will be used.

C. The Contractor shall obtain all necessary permits required by the local jurisdictions to perform the work of this Contract. The Contractor shall provide OCTA Project Manager copies of all permits obtained prior to starting work covered by the permit.

D. The Contractor shall install pollution control features required by permits for the construction. These features shall be maintained throughout the duration of construction and removed at the completion of construction.

E. Upon completion of the work, the Contractor shall remove all equipment, temporary facilities, construction tools, apparatus, equipment, unused materials and supplies, plant, and personnel from the worksite and shall leave the worksite in a clean and satisfactory condition as approved by OCTA Project Manager.

PART 4 – MEASUREMENT AND PAYMENT

Work is considered incidental to work under other payment items and no separate payment will be made.

END OF SECTION

SECTION 01 71 23

FIELD ENGINEERING

PART 1 – GENERAL

1.01 DESCRIPTION

A. Work Includes:

1. Employ land surveyors and professional engineers, licensed in the State of California, to perform surveying and field engineering as required per Contract Documents.

2. Establish and maintain baselines and field control points as required for construction layout survey.

3. Perform survey and measurement to establish design lines and grades.

4. Layout of the Work.

5. Other engineering services, as necessary, to accomplish the Work.

1.02 GENERAL

A. Contractor shall locate and protect all adjacent areas, utilities, equipment, buses, cars, and appurtenances.

B. Control area of work, so that it does not interrupt bus maintenance and operations activities, or bus or car traffic flow on the site. Provide barricade and traffic signs around work area, excavations, and contractor's equipment. Provide flashing lights from dusk to dawn on all sides of construction work.

C. Promptly report and repair to the Engineer's satisfaction disruption in utilities caused by construction work. Repair disruption of utilities immediately.

D. Make no changes without prior written notice to the Engineer.

1.03 SUBMITTALS

A. Submit for OCTA's approval the name and professional history of the land surveying firm designated by the Contractor as its project surveyor.

1. At a minimum the project surveyor must have five to ten years of verifiable experience performing field survey.

B. On request, submit to OCTA Project Manager documentation that verifies accuracy of field engineering work and surveying work. Submit data certifying the all dimensions, elevations, and locations of improvement are in conformance, or non-conformance, with Contract Documents at end of Project.

C. Prior to completion of project and when requested by OCTA Project Manager, submit a copy of site drawing prepared by California registered engineer and signed by land surveyor verifying that the elevations and locations of the work are in conformance with contract documents.

D. Contractor shall submit a complete copy of the baseline survey field notes and final layout.

E. Contractor shall provide As-built redline drawings to the Authority at the completion of the Project.

1.04 REQUIREMENTS

A. Field Engineering: Provide field engineering services, as necessary. Utilize recognized engineering practices.

B. Verification: Verify all existing dimensions before starting work. Record all existing pavement striping and markings and submit this record to OCTA before commencing any demolition work.

C. Layout and Control of the Work: Establish elevations, lines, and grade for all Work under this Contract. Locate and lay out by instrumentation and similar appropriate means. Contractor is responsible for all construction field survey and setting of grades and slopes. New asphalt or concrete paving flow patterns should merge with existing flow patterns on the site so that flow of water is directed towards existing gutters, swales, and storm drains on site. Protect in place existing storm drain system, swales, gutters, concrete walk, storm drain inlets, channel wall, fencing, on-site storage, OCTA equipment, and property during construction.

D. Verification of Work: Periodically verify layout and completed conditions of the Work by same means.

E. Project area shall be cordoned off using traffic cones during each construction phase on all sides at end of work day. Traffic cones shall be removed by the end of each work day.

1.05 QUALITY CONTROL

A. Contractor shall maintain a complete and accurate log of control and survey work as it progresses.

B. OCTA Project Manager reserves the option to check Contractor's survey measurements and calculations. Whether OCTA Project Manager exercises this option or not, the requirement for accuracy will not be waived.

C. On completion of construction and major site improvements, Contractor shall prepare a final certified survey illustrating dimensions, locations, angles, and elevations of construction and work site.

PART 2 – PRODUCTS

Not Used

PART 3 – EXECUTION

3.01 EXAMINATION

A. Verify locations of survey control points prior to starting any work on the project site. Contractor shall field verify all existing dimensions, conditions, layout, grading that will affect the project before commencing any work.

B. Review OCTA record drawings for underground utilities and field verify all utilities that may affect construction activities before demolition work and excavation. Contractor shall utilize an independent utility locator company to survey and map any and all utilities that may affect construction activities and determine if there are any utility lines in conflict with construction of this project.

C. Contractor shall conduct survey (line and grade) of existing improvements such as top of curb, finished surface, flow lines etc. before any demolition or removal is undertaken. Areas where pavement has failed or settled shall be documented.

D. Immediately notify OCTA Project Manager of any discrepancies discovered.

E. Finished grade shall match existing grade and ensure positive drainage is provided.

3.02 SURVEYS AND RECORDS

A. Working from lines and grades established by baseline survey as shown in relation to work, establish and maintain bench marks and other dependable markers to set lines and levels for work on site as needed to locate each element of the project.

B. Contractor shall inform tradesmen performing the work of marked lines and grades provided for their use in layout work.

C. Contractor shall provide a complete copy of baseline survey field notes and final layout to OCTA Project Manager prior to starting construction.

D. Certify all lines and grades to OCTA.

3.03 SURVEY REFERENCE POINTS

A. Contractor shall locate and protect survey control and reference points. Preserve permanent reference points during construction.

B. Contractor shall establish appropriate control datum for construction survey.

C. Contractor shall report to OCTA Project Manager the loss or destruction of any reference points or relocation required because of changes in grades or other reasons.

D. Contractor shall replace dislocated survey control points based on original survey control and shall make no changes without prior written notice to and approval by OCTA Project Manager.

PART 4 - MEASUREMENT AND PAYMENT

No separate measurement or payment will be made under this section.

END OF SECTION

THIS PAGE DELIBERATELY LEFT BLANK

SECTION 01 73 29

CUTTING AND PATCHING

PART 1 - GENERAL

1.01 SECTION INCLUDES

A. Requirements and limitations for cutting and patching of Work.

1.02 RELATED SECTIONS

A. Section 01 11 00 - Summary of Work.

B. Individual Product Specification Sections:

1. Cutting and patching incidental to Work specified in the Section.

2. Coordination with Work specified in other Sections for openings required to accommodate Work specified in those other Sections.

C. Include:

1. Identification of Project.

2. Location and description of affected Work.

3. Explanation of necessity for irregular cutting and patching procedures.

4. Description of proposed special work and alternate products to be used.

5. Alternatives to cutting and patching.

6. Effect on existing construction and, if applicable, work being performed for the Authority under separate contracts.

7. Date and time Work will be executed.

8. Written permission of affected separate contractor.

PART 2 - PRODUCTS

2.01 MATERIALS

A. Primary Products: As required for original installation and to match surrounding

construction.

B. Product Substitution: For each proposed change in materials, submit request for substitution under provisions of Section 01 60 00 - Product Requirements.

PART 3 - EXECUTION

3.01 EXAMINATION

A. Examination, General: Inspect existing conditions prior to commencing Work, including elements subject to damage or movement during cutting and patching.

B. After uncovering existing Work, inspect conditions affecting proper accomplishment of Work.

C. Beginning of cutting or patching shall be interpreted to mean that existing conditions were found by Contractor to be acceptable.

3.02 PREPARATION

A. Temporary Supports: Provide devices and methods to protect other portions of Project from damage by providing temporary supports.

3.03 CUTTING AND PATCHING

A. Cutting and Patching:

1. Execute cutting, fitting, patching, excavation, and fill, to complete Work.

2. Coordinate installation or application of products for integrated Work.

B. Remedial Work: Remove and replace defective or non-conforming Work.

3.04 PERFORMANCE

A. Cutting and Patching:

1. Execute demolition, cutting and patching by methods to avoid damage to adjoining Work, and which will provide appropriate surfaces to receive final finishing.

2. Saw cut asphalt concrete or Portland cement concrete paving for smooth edges. Do not overcut corners.

3. Contractor is required to take all precautions during construction to prevent damage to OCTA buses, property, equipment, utilities, and OCTA personnel. All precautions are to taken per CAL-OSHA code to prevent accidents, and damage to adjacent OCTA property and appurtenances.

B. Restoration:

1. Restore Work with new products as specified in individual Sections.

2. Where affected or uncovered by construction work, finish adjacent surfaces and background to condition before construction. Match material, paint, and finish to nearest joint. Re-paint all curbs, traffic striping, legends, parking stalls, numbers, and paving as existed before construction. Damage to adjacent or OCTA property shall be repaired, at the Contractor's expense, to a condition as existed before construction and to OCTA's Project Manager's satisfaction.

C. Finishing: Refinish (material and paint) surfaces to match adjacent and similar finishes as used for the Project. (match material and paint finish). For continuous surfaces, refinish with material and paint to nearest intersection or natural break or joint. Replace equipment or appurtenances damaged due to demolition, cutting or patching work during construction. Provide material quality to level equal to or better than that which existed before construction started.

PART 4 - MEASUREMENT AND PAYMENT

No separate measurement or payment will be made under this section.

END OF SECTION

SECTION 01 74 19

CONSTRUCTION WASTE MANAGEMENT AND DISPOSAL

PART 1 - GENERAL

1.01 DESCRIPTION

A. Work Includes: Procedures for ensuring optimal diversion of construction and demolition waste generated by the Project, and documentation procedures for tracking waste generation and diversion.

1.02 DEFINITIONS

A. Certified Mixed Debris Processing Facility: A solid waste processing facility that accepts loads of mixed debris for the purpose of recovering re-usable and recyclable materials and disposing of the non-recyclable residual material.

B. Class III Landfill: A landfill that accepts non-hazardous solid waste such as household, commercial, and industrial solid waste. A Class III landfill shall have a California Integrated Waste Management Board (CIWMB) solid waste facilities permit and is regulated by the Local Enforcement Agency.

C. Construction and Demolition (C&D) Debris: Solid waste and recyclable materials that result directly from construction and demolition of buildings and other structures, do not contain hazardous waste (as defined in CCR Title 22, Section 66621.3, *et seq*.), and contain no more than 1 percent putrescible wastes by volume, calculated on a monthly basis. C&D debris includes, but is not limited to: asphalt, concrete, portland cement, brick, lumber, wallboard, roofing material, ceramic tile, pipe, glass and associated packaging.

D. Disposal: Acceptance of solid waste at a legally operating facility for the purpose of landfilling.

E. Diversion: Activities that result in reducing the amount of waste disposed at a landfill. This can include source reduction activities, composting, recycling, and reuse.

F. Inert Backfill Site: A location, other than inert fill or other disposal facility, to which inert waste is taken for the purpose of filling an excavation, shoring, or another soils engineering operation.

G. Inert Fill: A facility that can legally accept inert waste such as asphalt and concrete exclusively for the purpose of disposal.

H. Inert Debris/Inert Waste: Solid waste and recyclable materials that are source separated or separated for reuse, do not contain hazardous waste (as defined in

CCR, Title 22, section 66261.3 et. seq.) or soluble pollutants at concentrations in excess of applicable water quality objectives, and do not contain significant quantities of decomposable waste. Inert debris may not contain more than 1 percent putrescible wastes by volume calculated on a monthly basis. Gravel, rock, soil, sand and similar materials, whether processed or not, that have never been used in connection with any structure, development, or other human purpose are not inert debris.

I. Mixed Debris: Material that includes commingled recyclable and non-recyclable construction and demolition debris.

J. Mixed Debris Processing Facility: A solid waste processing facility that accepts loads of mixed debris for the purpose of recovering re-usable and recyclable materials and disposing of the non-recyclable residual materials. Refer also to Certified Mixed Debris Processing Facility.

K. Permitted Waste Hauler: A company that possesses a valid and current permit from the County of Riverside to collect and transport solid waste from individuals or businesses in the County of Riverside.

L. Recycling: The process of sorting, cleaning, treating, and reconstituting materials for the purpose of using the altered form in the manufacture of a new product. Recycling does not include burning, incinerating, or thermally destroying solid waste.

   1. On-site recycling materials that are sorted and processed for use in an altered form in the Project, (e.g. concrete is crushed for use as base for a parking lot on the site).

   2. Off-site recycling source-separated materials hauled to another location and used in an altered form in the manufacture of a new product.

M. Recycling Facility: An operation that can legally accept materials for the purpose of processing the materials into an altered form for the manufacture of a new product. Depending on the types of materials accepted and operating procedures, a recycling facility may or may not be required to have a Solid Waste Facilities permit from the CIWMB or be regulated by the Local Enforcement Agency.

N. Reuse: Materials that are recovered for use in the same form. This includes materials that are reused on-site or off-site.

O. Salvage: Materials recovered for reuse or sale or donation to a third party.

P. Source Reduction: Any action causing a net reduction in the generation of solid waste. Source reduction includes, but is not limited to, reducing the use of non-recyclable materials, replacing disposable materials and products with reusable materials and products, reducing packaging, and reducing the amount of yard waste generated.

Q. Source-Separated Materials (Construction and Demolition Debris): Material that is

sorted at the site of generation by individual material type for the purpose of reuse or recycling, i.e., loads of concrete that are source-separated for delivery to a base course recycling facility to be crushed into road base material.

R. Solid Waste: Shall mean waste that the CIWMB has deemed acceptable for disposal at a Class III landfill and shall not include source-separated material.

S. Transfer Station: A facility that can legally accept solid waste for the purpose of temporarily storing the materials for re-loading onto other trucks and transporting materials to a landfill for disposal, or recovering some materials for reuse or recycling. Transfer stations must be permitted by the CIWMB and regulated by the Local Enforcement Agency.

1.03 SUBMITTALS

A. Waste Management Plan (WMP): Conduct a site assessment and estimate the types and quantities of materials, under the Project, that are anticipated for on-site or off-site processing, recycling, reuse, or disposal.

1. Not more than 10 working days after Notice to Proceed, submit to OCTA Project Manager a written WMP. The plan shall show the percentage of recycling for inert debris expected from the Project and the percentage recycling for the remaining C&D debris expected from the Project. While no minimum amounts of recycling have been established for this project, Contractor shall make every reasonable effort to achieve a minimum of 50% by weight of material that is recycled, re-used, salvaged or otherwise diverted from landfill.

2. OCTA Project Manager's approval of the Contractor's WMP will not otherwise relieve the Contractor of responsibility for adequate and continuing control of pollutants and other environmental protection measures.

3. Dirt and excavation spoils, whether reused as fill or not, will not be counted in the calculation of diverted and disposed materials.

B. Solid Waste Diversion and Disposal Report (SWDD Report): One week prior to the first of every month, and prior to Contractor's monthly progress estimate for payment, Contractor shall prepare and submit to OCTA Project Manager a written SWDD report quantifying all material generated in the Project which was either disposed or diverted from disposal through reuse or recycling during the time period covered by the SWDD report and progress payment. Include in the Report a cumulative history of the diversion and disposal for the Project. Attach supporting documentation including manifests, weigh tickets, receipts, reports, invoices, and other supporting documents specifically identifying the project, the recyclables and solid waste generated by the Project, and where the material was sent. The final SWDD report shall cover the complete time period of the Project and shall contain a list of the total waste disposed and/or diverted for each reporting period. The final SWDD report and supporting documentation shall be submitted within 30 Calendar Days of Project completion.

1.04 WASTE MANAGEMENT PLAN SUBMITTAL MEETING

A. On or about 5 working days after Notice to Proceed, OCTA Project Manager will schedule and attend a meeting with the Contractor to discuss the proposed WMP submittal. This meeting shall be held to allow the OCTA and the Contractor an opportunity to develop a mutual understanding regarding the recycling and reuse requirements and programs.

1.05 REUSE, SALVAGE, AND RECYCLING OPTIONS

A. Contractor shall make use of as many reuse and salvage options as is feasible. One option is the California Materials Exchange (CalMAX), a free program sponsored by the CIWMB.

B. Recycling shall include both on-site and off-site recycling of source-separated materials, as well as mixed debris recycling efforts.

C. On-site recycling program shall produce a quality product to meet the specifications identified in the Contract Documents, subject to approval. Estimate the amount of material to be used in the Project and include a program for off-site recycling of any excess material that cannot be used in the Project.

D. Develop and implement a program to include source separation of solid waste, to the greatest extent feasible, of the following types:

1. Asphalt
2. Concrete and concrete block
3. Rock
4. Wood (lumber)
5. Green material (i.e. tree trimmings)
6. Metals

E. Mixed Debris Recycling: Develop and implement a program to transport loads of commingled construction and demolition materials that cannot be feasibly source separated to a mixed debris recycling facility.

1.06 HAULING AND DISPOSAL OPERATIONS

A. Hauling: Arrange the collection and hauling of C&D debris by a waste hauler that is permitted by the County of Orange Waste Management Department and Agencies

as applicable.

B. Recycling And Processing Facilities: Transport C&D debris to recycling or processing facilities. Contractor shall be familiar with the requirements for acceptance of C&D materials at the recycling and processing facilities before the material is delivered. Always call facilities in advance to verify requirements.

C. Disposal Facilities: Transport C&D debris that cannot be delivered to a recycling or processing facility, to a transfer station or disposal facility that can legally accept the materials for the purpose of disposal.

D. Site Disposal: Do not burn, bury, or otherwise dispose of solid waste on the Project job-site. All trash, debris, and removed materials shall be hauled away and legally disposed off-site on the same day they are removed.

PART 2 – PRODUCTS

Not Used

PART 3 – EXECUTION

Not Used

PART 4 – MEASUREMENT AND PAYMENT

No separate measurement or payment will be made under this section.

END OF SECTION

SECTION 01 74 23

CLEANING

PART 1 - GENERAL

1.01 DESCRIPTION.

A. Work Included:

1. Execute cleaning, during progress of the work, and at completion of the work.

B. Related Work Specified Elsewhere:

1. Cleaning for specific products or work; the respective specification section for that work.

2. Refer to Section 01 14 25, Procedures in Construction for requirements for restoration of project site(s), including but not limited to photographic documentation.

3. Refer to Section 01 71 13, Mobilization and Demobilization for requirements for removal of all of Contractors facilities, equipment and tools.

1.02 DISPOSAL REQUIREMENTS.

A. Conduct cleaning and disposal operations to comply with all applicable codes, local codes, ordinances, regulations and laws, rules and practices.

B. Conform to requirements of 01 74 19, Construction Waste Management and Disposal.

PART 2 - PRODUCTS

2.01 MATERIALS

A. Use only those cleaning materials which will not create hazards to health or property and which will not damage surfaces.

B. Use only those cleaning materials and methods recommended by manufacturer of the surface material to be cleaned.

C. Use cleaning materials only on surfaces recommended by cleaning material manufacturer.

PART 3 - EXECUTION

3.01 CLEANING DURING CONSTRUCTION

A. Provide all labor and equipment required to remove trash and broom clean project sites as required, including surrounding areas affected by construction activities.

B. Provide all labor and equipment required to load, haul, and legally dispose of all construction trash and debris at the end of each work day throughout the duration of the project.

C. Pay all dump fees required to legally dispose of materials.

D. Clean streets adjacent to the project site as required to meet the requirements of all local, City, County and State authorities.

E. Clean and wash parking lots and driveways.

F. Provide labor to clean the office trailer once a week.

G. Clean up all excess concrete from site concrete work.

H. Wet down dry materials and rubbish to prevent blowing dust.

I. At reasonable intervals during progress of work and at the end of each work day, remove waste materials, debris and rubbish from site and dispose of legally away from site.

J. Handle waste materials and debris in a controlled manner with as few handlings as possible; do not drop or throw materials from heights.

K. Schedule cleaning operations so that dust and other contaminants resulting from cleaning process will not fall on wet or newly painted surfaces.

L. Do not place in fills or backfills or burry at site any waste material, rubbish or debris. Remove such material from project to a lawful disposal area by the end of each work day; pay all associated hauling and dumping charges.

M. Perform any additional cleaning or cleaning at shorter intervals when instructed to do so by OCTA Project Manager.

3.02 FINAL CLEANING

A. SUBSTANTIAL COMPLETION REVIEW CLEANING, GENERAL

1. Substantial Completion Review Cleaning, General: Execute a thorough cleaning prior to Substantial Completion review by the Engineer.

   a. Clean surrounding areas affected by construction. Clean and repair all surrounding areas and appurtenances such as curbs, gutters, swales, storm drain, platforms, equipment, vents, buses, fences, Apex boxes, light concrete pedestal, landscaping, and driveways. Repair equipment, curbs, surrounding driveways, landscaping, and site affected by the construction work by thorough brooming and washdown. Remove all oil, concrete, debris, and paint from the surfaces mentioned.

   b. Remove waste and surplus materials, rubbish and temporary construction facilities, utilities and controls from site.

2. Employ experienced workmen, or professional cleaners, for final cleaning.

3. In preparation for occupancy, conduct final inspection of sight-exposed surfaces, and of concealed spaces.

4. Remove grease, dust, dirt, stains, labels, fingerprints, and other foreign materials, from sight-exposed finished surfaces; polish surfaces so designated to shine finish.

5. Wash and shine glazing and mirrors.

6. Repair, patch and touch up marred surfaces to specified finish, to match adjacent surfaces.

7. Water-jet clean paved surfaces; rake clean other surfaces of grounds. Comply with SWPPP BMP measures.

8. Remove all protective construction coverings and coatings.

9. Contaminated Earth: Final clean-up operations shall include removal and lawful disposal of earth that is contaminated or unsuitable for support of plant life in planting areas, as well as filling of resulting excavations with suitable soil. Contaminated areas include those used for disposal of waste concrete, mortar, plaster, masonry and similar materials; areas in which washing out of concrete and plaster mixes or washing of tools and other similar cleaning operations have been performed; and areas that have been oiled, paved or chemically treated. Do not dispose of waste oil, solvents, paints, solvents and similar material of a penetrating nature by depositing or burying on OCTA's property.

10. Maintain cleaning until project is occupied.

11. Final cleaning shall be done to the satisfaction of OCTA Project Manager.

B. FINAL COMPLETION INTERIOR CLEANING

1. Final Completion Cleaning, General: Complete final cleaning before submitting final Application for Payment.

    a. Remove asphalt, oil, grease, mastic, adhesives, dust, dirt, stains, fingerprints, labels, concrete material, and other foreign materials from all visible exterior surfaces.

    b. Remove dust from all horizontal surfaces not exposed to view, including equipment, light standards, ledges, utilities, buses, apex boxes, and plumbing fixtures on site affected by construction.

    c. Repair all disrupted or broken appurtenances which were damaged during construction to a new condition to the OCTA's Project Manager's satisfaction.

2. Clean all adjacent walls, equipment, and other appurtenances mentioned in article 3.1.A.1 above affected by construction work including areas adjacent to construction and on site.

3. Clean construction area in which phase has been completed and re-stripe before begin of next phase of work

C. FINAL COMPLETION SITE CLEANING

1. Site Cleaning: Broom clean exterior paved surfaces. Rake clean other surfaces of the grounds affected by construction material.

    a. Wash down and scrub where necessary all paving soiled as a result of construction activities. Thoroughly remove material droppings, asphalt splatters, stains, oil, and adhered soil.

    b. Remove from the site all construction waste, unused materials, excess soil and other debris resulting from the Work.

PART 2 – PRODUCTS

Not Used

PART 3 – EXECUTION

Not Used

PART 4 – MEASUREMENT AND PAYMENT

No separate measurement or payment will be made under this section.

END OF SECTION

SECTION 01 77 00

CLOSEOUT PROCEDURES

PART 1 – GENERAL

1.01 SUMMARY

A. Section Includes:

1. Administrative and procedural requirements for contract closeout, including, but not limited to, the following:

   a. Substantial Completion procedures.

   b. Final Acceptance procedures.

B. Related Sections:

1. Section 01 74 23, Cleaning, for final cleaning of project site(s).

2. Section 01 78 00, Closeout Submittals, for operation and maintenance manual requirements.

3. Section 01 78 00, Closeout Submittals, for submitting record drawings, record specifications, and record product data.

4. Section 01 78 36, Warranties and Guarantees and Bonds, for submitting Warranties.

5. Divisions 02 through 48 sections for any specific closeout requirements for the work in those sections.

1.02 SUBSTANTIAL COMPLETION

A. Preliminary punch list review: At Contractor's request, the Engineer will attend a preliminary Contract closeout review, not earlier than 14 days prior to anticipated Substantial Completion review day. The Engineer and Contractor shall conduct a brief walk-though of Project to review scope, adequacy and completeness of the Work. The Engineer will prepare a typewritten list of items to be completed and corrected (preliminary punch list).

B. Before requesting review/inspection for determining date of Substantial Completion, the Contractor shall complete the following:

1. Execute cleaning and clear site of temporary facilities and controls, as specified in Section 01 50 00 Temporary Facilities and Controls and in Section 01 74 23 Cleaning.

2. Prior to Substantial Completion review, complete all testing, inspection, balancing, sterilization and cleaning of the Work. Obtain final City Inspection and City sign-off required for the Project. Provide original of final sign-off cards to the Authority.

3. Advise OCTA of pending insurance changeover requirements.

4. Submit specific warranties, workmanship bonds, maintenance service agreements, final certifications, and similar documents. Refer to Section 01 78 00, Closeout Submittals for requirements.

5. Obtain and submit releases permitting OCTA unrestricted use of the work and access to services and utilities. Include occupancy permits, operating certificates, and similar releases.

6. Prepare and submit project record documents, operation and maintenance manuals, final completion construction photographic documentation, damage or settlement surveys, property surveys, and similar final record information. Refer to Section 01 78 00, Closeout Submittals for requirements.

7. Deliver tools, spare parts, extra materials, and similar items to location designated by Owner. Label with manufacturer's name and model number where applicable.

8. Make final changeover of permanent locks and deliver keys to OCTA Project Manager. Advise OCTA’s personnel of changeover in security provisions.

9. Complete startup testing of systems.

10. Submit test/adjust/balance records.

11. Terminate and remove temporary facilities from project site, along with mockups, construction tools, and similar elements. Refer to Section 01 71 13, Mobilization and Demobilization for requirements.

12. Advise OCTA Project Manager of changeover in utilities.

13. Submit changeover information related to OCTA's occupancy, use, operation, and maintenance.

14. Complete final cleaning requirements, including touchup painting. Refer to Section 01 74 23, Cleaning for requirements.

15. Touch up and otherwise repair and restore marred exposed finishes to eliminate visual defects.

C. Contractor's Certification: The Contractor shall submit to the Engineer written certification that Contract Documents have been reviewed, Work has been inspected, and that Work is complete in accordance with Contract Documents and ready for Substantial Completion review by the Engineer. Provide five working days notice to the Engineer that Work is substantially complete.

D. Punch List Review: The Authority's Engineer, and the responsible design consultants, as may be necessary, will attend a Contract closeout review and conduct a walk-thorough of Project to review the updated list of items to be completed and corrected (Punch List).

1. Contractor shall prepare a list and record additions, deletions, and revisions as noted by the Engineer for completion or correction.

2. The Contractor shall complete all items on the punch list and notify the Engineer the completed items. The Engineer will update and distribute the revised Punch List after his next walk-through.

3. Costs of additional visits caused by incomplete scope of work or punch list items after the second visit to the site by the Engineer and the design consultants, to review completion and correction of Work, shall be reimbursed to the Authority by the Contractor.

E. Inspection: Submit a written request for inspection for Substantial Completion. On receipt of request, OCTA Project Manager will either proceed with inspection or notify Contractor of unfulfilled requirements. OCTA Project Manager will prepare the Certificate of Substantial Completion after inspection or will notify Contractor of items, either on Contractor's list or additional items identified by OCTA Project Manager, that must be completed or corrected before certificate will be issued.

1. Re-inspection: Request re-inspection when the work identified in previous inspections as incomplete is completed or corrected.

2. Results of completed inspection will form the basis of requirements for final completion.

1.03 FINAL ACCEPTANCE

A. Preliminary Procedures: Before requesting final inspection for determining final acceptance, complete the following:

1. A final Application for Payment according to Section 01 29 00, Payment Procedures and the General Provisions of the Contract.

2. Submit certified copy of OCTA Project Manager's Substantial Completion inspection list of items to be completed or corrected (punch list), endorsed and dated by OCTA Project Manager. The certified copy of the list shall state that each item has been completed or otherwise resolved for acceptance.

3. Submit evidence of final, continuing insurance coverage complying with insurance requirements.

4. Instruct OCTA's personnel in operation, adjustment, and maintenance of products, equipment, and systems.

B. Inspection: Submit a written request for final inspection for final acceptance. On receipt of request, OCTA Project Manager will either proceed with inspection or notify Contractor of unfulfilled requirements. OCTA Project Manager will prepare a final Certificate for Payment after inspection or will notify Contractor of construction that must be completed or corrected before certificate will be issued.

1. Re-inspection: Request re-inspection when the work identified in previous inspections as incomplete is completed or corrected.

C. Engineer's Certification: The Engineer determines that the list of items to be completed and corrected (Punch List) is sufficiently complete for the Authority to occupy the Project area for the use to which it is intended.

D. Notice of Completion: The Authority, after receipt of the Engineer's certification, will record a Notice of Completion with the county.

PART 2 – PRODUCTS

Not Used

PART 3 - EXECUTION

Not Used

PART 4 - MEASUREMENT AND PAYMENT

No separate measurement or payment shall be made under this section.

END OF SECTION

SECTION 01 78 00

CLOSEOUT SUBMITTALS

PART 1 - GENERAL

`

1.01 SUMMARY

A. Section Includes:

1. Maintain at the site for OCTA Representative one record copy of Project record documents, including:

   a. Record drawings.

   b. Record specifications.

   c. Addenda.

   d. Change Orders and other Modifications to the Contract.

   e. OCTA's field orders and written instructions.

   f. Reviewed and Accepted Shop Drawings, Product Data and Samples.

   g. Field Test Reports.

   h. Referenced Documents.

B. Related Sections:

1. Section 01 77 00, Closeout Procedures.

2. Section 01 78 36, Warranties and Guarantees and Bonds.

3. Section 01 33 00, Submittal Procedures.

4. Sections in Division 02-49 for specific requirements related to work of those sections.

5. General Conditions for all financial and payment requirements.

1.02 SUBMITTALS

A. At Contract close-out, deliver Record Documents to the OCTA’s representative.

B. Accompany submittal with transmittal letter in duplicate, containing:

1. Date;

2. Project title and contract number;

3. Contractor's name and address;

4. Title and number of each Record Document; and

5. Signature of Contractor or his authorized representative.

C. Submit in accordance with Section 01 33 00, Submittal Procedures.

D. Record Drawings: Submit one set of full size marked-up record prints. Submit also as pdf electronic file on electronic media acceptable to OCTA Project Manager.

E. Record Specifications: Submit one set of contract specifications, including addenda and contract modifications. Submit also as pdf electronic file on electronic media acceptable to OCTA Project Manager.

F. Record Product Data: Submit one marked-up copy of each product data submittal. Submit also as pdf electronic file on electronic media acceptable to OCTA Project Manager.

1. Product data need not be submitted separately if included in operation and maintenance manuals.

G. Shop Drawings: Submit the approved shop drawings to OCTA, both in PDF and native file formats.

H. Operations and Maintenance Manual:

1. Manual content is specified in individual specification sections to be reviewed at the time of section submittals. Submit review manual content formatted and organized as required by the section. Where applicable, clarify and update reviewed manual content to correspond to modifications and field conditions.

2. Submit three paper copies of each Operations and Maintenance Manual. Include a complete operation and maintenance directory. Enclose tile pages and directories in clear plastic sleeves.

3. Submit PDF electronic file on digital media acceptable to OCTA Project Manager. Assemble each manual into a composite electronically-indexed file.

4. Initial Manual Submittal: Submit draft copy of each manual at least 30 calendar days before commencing demonstration and training. OCTA Project Manager will comment on whether general scope and content of manual are acceptable.

a. Correct or modify each manual to comply with OCTA Project Manager's comments. Submit copies of corrected manual within 15 calendar days of receipt of comments and prior to commencing demonstration and training.

5. Final Manual Submittal: Submit each manual in final form before requesting inspection for Substantial Completion and at least 15 calendar days before commencing demonstration and training.

I. Other Documents: Unless otherwise specified, submit one (1) hard copy and a PDF electronic file of each document required herein.

1.03 FINAL COMPLETION SUBMITTALS:

A. Final Submittals: Submit to the Engineer all documents and products required by Specifications to be submitted, including the following which apply:

1. Project record drawings and specifications.

2. Operations and Maintenance data.

3. Guarantees, warranties and bonds.

4. Test reports and certificates of compliance.

5. Local Regulatory Jurisdiction(s) final Sign-off, including any and all documents required by governing authorities, utilities and other agencies, building permit cards, inspection cards signed-off as final by the inspectors, and certifications of inspections and tests.

B. Certificates of Compliance and Test Report Submittals: Submit to the Engineer certificates and reports as specified, as required by manufacturers for warranty and guarantee purposes, and as required by authorities having jurisdiction.

C. Subcontractor List: Submit to the Engineer a PDF of updated Subcontractor and Materials Supplier List.

D. Warranty Documents: Prepare and submit to the Engineer warranties and bonds as specified in Section 01 78 36 Warranties and Guarantees and Bonds.

E. Final Payment: A final Application for Payment will be furnished by the Authority. The Authority will process the final payment per the General Provisions of the Contract.

1.04 PROJECT RECORD DOCUMENTS - GENERAL

A. Maintain on site, one set of the following record documents and record actual construction and all revisions to the Work:

1. Contract Drawings.

2. Project Manual, with Specifications, Addenda, Change Orders and other instruments modifying the Contract.

3. Reviewed shop drawings, product data and samples.

4. Store Record Documents separate from documents used for construction.

1.05 AS-BUILT DRAWINGS:

A. Record Prints: Maintain one set of black-line white prints of the contract drawings and shop drawings for the sole purpose of recording all as-built changes to the work.

B. Preparation: Record information continuously as Work progresses. Do not conceal Work permanently until all required information is recorded. Require individual or entity who obtained record data, where individual or entity is installer, subcontractor, or similar entity, to prepare the marked-up record prints. Legibly and to scale, mark a reproducible set of Contract Drawings to record actual construction where installation varies from that shown on contract drawings, including:

1. Measured dimensions and cross section of work.

2. Measured horizontal and vertical locations of underground utilities, ducts, and vents from specific wall locations, including all new utilities installed and utilities found, abandoned or left in place, referenced to permanent surface improvements and to visible and accessible features of the structure.

3. Field changes of dimensions and details.

4. Details not on original Contract Drawings and any other changes to the original Contract Drawings (Changes of location of utilities, equipment, and other accessories).

5. As-Built information shall be shown along with RFIs, Submittals, Change Orders, or other indicating source of changes. References to written changes such as RFI's of Field Directives should be clouded on the drawings with a copy of the written direction attached to the set of drawings.

6. Give particular attention to information on concealed elements that would be difficult to identify or measure and record later.

7. Accurately record information in an understandable drawing technique.

8. Record data as soon as possible after obtaining it. Record and check the markup before enclosing concealed installations.

C. Mark record sets in red ink. Use other colors as required to distinguish between changes for different categories of the work at same location.

1. Mark important additional information that was either shown schematically, such as conduit runs, or omitted from original drawings.

2. Note work change RFI numbers, directive numbers, alternate numbers, change order numbers, and similar identification, where applicable.

1.06 AS-BUILT SPECIFICATIONS

A. Preparation: In PART 2 – PRODUCTS in each specification section, legibly mark in red ink and record actual products installed or used

1. Give particular attention to information on concealed products and installations that cannot be readily identified and recorded later.

2. Mark copy with the proprietary name and model number or catalog number of products, materials, and equipment furnished, including substitutions or alternates utilized and product options selected.

3. Record the name of manufacturer, supplier, installer, and other information necessary to provide a record of selections made.

4. For each principal product, indicate whether record product data has been submitted in operation and maintenance manuals instead of submitted as record product data.

5. Note related addenda, change orders, record product data, and record drawings, and other instruments modifying the Contract, where applicable.

1.07 SHOP DRAWINGS

A. Maintain as record documents.

1. Legibly annotate drawings to record changes made after review.

2. Record Shop Drawings:

a. Revise the shop drawings CAD files to reflect annotations made on record copy.

b. Submit approved shop drawings in both PDF and native file formats.

1.08 OPERATIONS AND MAINTENANCE DOCUMENT DIRECTORY

A. Organization: Include a section in the directory for each of the following:

1. List of documents.

2. List of systems.

3. List of equipment.

4. Tables of contents.

B. List of systems and subsystems: List systems alphabetically. Include references to operation and maintenance manuals that contain information about each system.

C. List of Equipment: List equipment for each system, organized alphabetically by system. For pieces of equipment not part of system, list alphabetically in separate list.

D. Tables of Contents: Include a table of contents for each emergency, operation, and maintenance manual.

E. Identification: In the document directory and in each operation and maintenance manual, identify each system, subsystem, and piece of equipment with same designation used in the contract documents. If no designation exists, assign a designation according to ASHRAE Guideline 4, Preparation of Operating and Maintenance Documentation for Building Systems.

1.09 REQUIREMENTS FOR OPERATION AND MAINTENANCE MANUALS

A. Organization: Unless otherwise indicated, organize each manual into a separate section for each system and subsystem, and a separate section for each piece of equipment not part of a system. Each manual shall contain the following materials, in the order listed:

1. Title page.

2. Table of contents.

3. Manual contents.

B. Title Page: Include the following information:

1. Subject matter included in manual.

2. Name and address of project.

3. Name and address of OCTA.

4. Date of submittal.

5. Name and contact information for Contractor.

6. Name and contact information for OCTA Project Manager.

7. Names and contact information for major consultants to OCTA Project Manager that designed the systems contained in the manuals.

8. Cross-reference to related systems described elsewhere in the operation and maintenance manuals.

C. Table of Contents: List each product included in manual, identified by product name, indexed to the content of the volume, and cross-referenced to specification section number in project manual.

1. If operation or maintenance documentation requires more than one volume to accommodate data, include comprehensive table of contents for all volumes in each volume of the set.

D. Manual Contents: Provide manuals for each piece of equipment including individual components and subsystems of complete assembly. Organize into sets of manageable size. Arrange contents alphabetically by system, subsystem, and equipment. If possible, assemble instructions for subsystems, equipment, and components of one system into a single binder. Line out non-applicable text and illustration. The section of the manual on operation shall describe the functions and limitations of each component and its relationship to the system of which it is a part. Where several models, options, or styles are described, the manual shall identify the items actually provided.

E. Manuals, Electronic Files: Submit manuals in the form of a multiple file composite electronic PDF file for each manual.

1. Electronic Files: Use electronic files prepared by manufacturer where available. Where scanning of paper documents is required, configure scanned file for minimum readable file size.

2. File Names and Bookmarks: Enable bookmarking of individual documents based upon file names. Name document files to correspond to system, subsystem, and equipment names used in manual directory table of contents. Group documents for each system and subsystem into individual composite bookmarked files, then create composite manual, so that resulting bookmarks reflect the system, subsystem, and equipment names in a readily navigated file tree. Configure electronic manual to display bookmark panel upon opening file.

F. Manuals, Paper Copy: Submit manuals in the form of hard copy, bound and labeled volumes.

1. Binders: Heavy-duty, three-ring, vinyl-covered, loose-leaf binders, in thickness necessary to accommodate contents, sized to hold 8-1/2 by 11 inch paper; with clear plastic sleeve on cover to hold label and cover sheet describing contents and with pockets inside covers to hold folded oversize sheets.

a. If two or more binders are necessary to accommodate data of a system, organize data in each binder into groupings by subsystem and related components. Cross-reference other binders if necessary to provide essential information for proper operation or maintenance of equipment or system.

b. Identify each binder on front and spine, with printed title "Operation and Maintenance Manual," project name, subject matter of contents, and specification section number (on bottom of spine). Indicate volume number for multiple-volume sets.

2. Dividers: Heavy paper dividers with plastic covered tabs for each section of manual. Mark each tab to indicate contents. Include typed list of products and major components of equipment included in the section on each divider, cross-referenced to specification section number and title of project manual.

3. Protective Plastic Sleeves: Transparent plastic sleeves designed to enclose diagnostic software storage media for computerized electronic equipment.

4. Supplementary Text: Prepared on 8-1/2 by 11 inch white bond paper.

5. Drawings: Attach reinforced, punched binder tabs on drawings and bind with text.

a. If oversize drawings are necessary, fold drawings to same size as text pages and use as foldouts.

b. If drawings are too large to be used as foldouts, fold and place drawings in labeled enveloped and bind envelopes in rear of manual. At appropriate locations in manual, insert typewritten pages indicating drawing titles, descriptions of contents, and drawing locations.

G. Manuals shall contain the following minimum information for each product or system:

1. List of equipment furnished for project with name, address, and telephone number of each vendor.

2. Name, address and telephone number for nearest manufacturer’s service representative.

3. Catalog, model and serial number for the installed equipment.

4. Description of the normal and emergency operations of the equipment.

5. Statement of warranty and date warranty begins and ends.

6. Standard starting, stopping and operating instructions.

7. Emergency and special operating instructions and a list of service organizations (including addresses and telephone numbers) capable of rendering emergency service to the various parts of the system.

8. Copy of each wiring and control diagram.

9. Routine maintenance procedures.

10. Servicing and lubrication schedule.

11. Manufacturer’s printed operating and maintenance instructions and part lists. Operating and maintenance instructions for each and every item of equipment, setting forth in detail and step-by-step the procedure of starting, stopping, operating, and maintaining the entire system as installed. Include a schedule of recommended maintenance intervals.

12. Manufacturer’s recommended special maintenance tools.

13. List of spare parts to include recommended stock quantities for one year of routine maintenance.

14. Tabulation of motor nameplate horsepower, nameplate current, field-measured current, overlay relay setting, and catalog number for polyphase motors.

15. List of fuses, lamps, seals, and other expendable equipment and devices. Specify size, type, and ordering description. List name, address, email address, fax number, and telephone number of vendor.

16. A copy of shop drawings for mechanical, electrical, and instrument equipment in final form.

17. Certified equipment drawings or reviewed shop drawing data clearly marked for equipment furnished.

H. Brochures shall be loose leaf with durable plastic or fiberboard covers. Each sheet shall be reinforced to prevent tearing from continued use, and each brochure shall have the following information clearly printed on its cover:

1. Project name, name of Owner, and address.

2. Name and address of Owner's Representative.

3. Name and addresses of contractors and subcontractors and department to contact.

4. Telephone number of contractors, including night and emergency numbers.

5. Major equipment vendors' names and telephone numbers.

I. Equipment Data Sheet: Provide six sets of equipment data sheets, bound in three-ring binders, summarizing the equipment manufacturer's maintenance instructions

and recommendations. A blank data sheet and a sample data sheet are attached at the end of this specification section.

1.10 PHOTOGRAPHS

A. Prior to performing any work on the site, the Contractor shall take a minimum of twenty (20) photographs of each project site. Each major area of work shall be the subject of at least one photograph.

B. After construction operations have been started at the site, the Contractor shall periodically take color photographs to show general site condition and progress of work. A minimum of twenty (20) photos shall be taken throughout each month and submitted to the OCTA Project Manager by the 5th of the following month. Each major area of work shall be the subject of at least one photograph.

C. The photo submittals shall be submitted electronically per OCTA's instruction. Each photograph will be captioned with date taken, location, and general description.

PART 2 – PRODUCTS

Not Used

PART 3 - EXECUTION

3.01 RECORDING AND MAINTENANCE OF PROJECT RECORD DOCUMENTS

A. Recording: Post changes and modifications to project record documents as they occur; do not wait until the end of project.

B. Maintenance of Record Documents: Store record documents in the field office apart from the contract documents used for construction. Do not use project record documents for construction purposes. Maintain one copy of each submittal during the construction period for project record document purposes. Maintain record documents in good order and in a clean, dry, legible condition, protected from deterioration and loss. Provide access to project record documents for OCTA Project Manager's reference during normal working hours.

C. Label each document "PROJECT RECORD" in two-inch high printed letters, or a height appropriate to document size.

PART 4 - MEASUREMENT AND PAYMENT

No separate measurement or payment will be made for the work of this section.

SAMPLE

Preventive Maintenance and Operating Requirement Sheets

Preventive Maintenance Program	Equipment Record Number	
EQUIPMENT DESCRIPTION	ELECTRICAL OR MECHANICAL DATA	
Name:	Size:	
Serial No.:	Model:	
Vendor:		
Vendor Address:	Type:	
	Mfr.:	
Vendor Rep:	Voltage:	Amps:
Phone:	Phase:	rpm:
Maintenance Work to be Done		Frequency*
OPERATING REQUIREMENTS AND REFERENCE		

*D - Daily; W - Weekly; B - Biweekly; M - Monthly; Q - Quarterly;
S - Semiannually; A - Annually.

SAMPLE

Preventive Maintenance and Operating Requirement Sheets

Preventive Maintenance Program	Equipment Record Number	
EQUIPMENT DESCRIPTION	ELECTRICAL OR MECHANICAL DATA	
Name: Pump No. 1 Tag No.: P01-1	Size: 15 hp	
Serial No.: 123456ABC Vendor: ABC Pump Co.	Model: 140T Frame Serial No. 987654ZY Class F Insulation W/Space Heater	
Vendor Address: 1111 Pump Circle Newport Beach, CA 92663	Type: Mfr.: DEF Motors, Inc.	
Vendor Rep: XYZ Equipment, Inc.	Voltage: 460	Amps: 20
Phone: 714/752-0505	Phase: 3	RPM: 1,800
Maintenance Work to be Done		Frequency*
1. Operate all valves and check such things as a) bearing temperature, b) changes in running sound, c) suction and discharge gauge readings, d) pump discharge rate, and e) general condition of the drive equipment.		D
2. Check packing.		
3. Checking pumping unit for any dust, dirt, or debris.		D
(Continued on attached sheet)		W
OPERATING REQUIREMENTS AND REFERENCE		
For manufacturer's instructions regarding installation, operation, maintenance, and trouble shooting of this equipment, see Volume ____, Section _____.		

*D - Daily; W - Weekly; B - Biweekly; M - Monthly; Q - Quarterly;
S - Semiannually; A - Annually.

SAMPLE

Preventive Maintenance and Operating Requirement Sheets

Preventive Maintenance Program	Equipment Record Number	
EQUIPMENT DESCRIPTION	ELECTRICAL OR MECHANICAL DATA	
Name:	Size:	
Serial No.:	Model:	
Vendor:		
Vendor Address:	Type:	
	Mfr.:	
Vendor Rep:	Voltage:	Amps:
Phone:	Phase:	RPM:
Maintenance Work to be Done		Frequency*
4. Lubricate bearing frame and motor bearings (consult manufacturer's instructions for type of grease or oil).		Q
5. Disassemble and change or repair the following a) impeller, b) shafts, c) shaft sleeve, d) rotary seals, and e) sleeve bearings.		A
OPERATING REQUIREMENTS AND REFERENCE		

*D - Daily; W - Weekly; B - Biweekly; M - Monthly; Q - Quarterly; S - Semiannually; A - Annually.

END OF SECTION

SECTION 01 78 36

WARRANTIES, GUARANTEES, AND BONDS

PART 1 - GENERAL

1.01 DESCRIPTION

A. Work Included:

1. General administrative and procedural requirements for preparation and submission of warranties and bonds required by the Contract Documents, including manufacturer's standard warranties on products and special Project warranties. This section specifies the general requirements for written warranties and guarantees required by the Contract Documents.

   a. Refer to the Conditions of the Contract for terms of Contractor's special warranty of workmanship and materials.

   b. Certifications and other commitments and agreements for continuing services to the Authority are specified elsewhere in the Contract Documents.

1.02 RELATED DOCUMENTS AND SECTIONS

A. Section 01 33 00 – Submittal Procedures: General administrative requirements for submittals, applicable to warranties and bonds.

B. Section 01 77 00 – Closeout Procedures: General requirements for closeout of the Contract.

C. Section 01 78 00 – Closeout Submittals: Operating and Maintenance data binders to include copies of warranties and bonds documents.

D. Individual Product Specifications Sections: Special Project warranty requirements for specific products or elements of the Work; commitments and agreements for continuing services to Authority.

1.03 WARRANTIES AND GUARANTEES

A. General: Provide all warranties and manufacturer's guarantees with OCTA named as the beneficiary. For equipment, products, or components bearing a manufacturer's warranty of guarantee that extends for a period of time beyond the Contractor's warranty and guarantee, so state in the warranty or guarantee.

B. Warranty: Assurance to the Authority by the Contractor, installer, supplier, manufacturer or other party responsible as warrantor, for the quantity, quality, performance and other representations of a product, system service of the Work, in

whole or in part, for the duration of the specified period of time. Warranty shall be an agreement to repair to repair or replace, without cost and undue hardship to the Authority, work performed under the Contract which is found to be defective during the warranty or guaranty period (correction period).

C. Guaranty: Assurance to the Authority by the Contractor or product manufacturer or other specified party, as guarantor, that the specified warranty will be fulfilled by the guarantor in the event of default by the warrantor.

D. Standard Product Warranty: Preprinted, written warranty published by product manufacturer for particular products and specifically endorsed by the manufacturer to the Authority.

E. Special Project Warranty: Written warranty required by or incorporated into Contract Documents, to extend time limits provided by standard warranty or to provide greater rights for the Authority. For provisions for special warranties, refer to the Conditions of the Contract for terms of the Contractor's special warranty of the workmanship and materials.

F. Specific Warranty and Guarantee Requirements: Refer to Divisions 02 and higher.

G. Disclaimers and Limitations: Manufacturer's disclaimers and limitations on product warranties shall not relieve the Contractor of warranty on the work that incorporates the products, nor shall they relieve suppliers, manufacturers and installers required to countersign special warranties with Contractor.

H. Related Damages and Losses: When correcting warranted work that has been found defective, remove and replace other work that has been damaged as a result of such defect or that must be removed and replaced to provide access for correction of warranted work.

I. Correction Period: The Correction Period shall be synonymous with warranty period and guaranty period used in the Contract Specifications. All defective work shall be initiated with 12 hours for critical system operations, as determined solely by the Authority, and within 3 calendar days for all other warranty work.

J. Reinstatement of Warranty: When work covered by a warranty has been found defective and has been corrected by replacement or rebuilding, reinstate the warranty by written endorsement. The reinstated warranty shall be equal to the original warranty with an equitable adjustment for depreciation.

K. Replacement Cost: Upon determination that work covered by a warranty has been found to be defective, replace or reconstruct the work to a condition acceptable to the OCTA, complying with applicable requirements of the Contract Documents. Contractor shall be responsible for all costs for replacing or reconstructing defective work regardless of whether the OCTA has benefited from use of the work through a portion of its anticipated useful service life.

L. The OCTA's Recourse: Written warranties made to the OCTA are in addition to implied warranties and shall not limit the duties, obligations, rights, and remedies otherwise available under law nor shall warranty periods be interpreted as limitations on time in which the OCTA can enforce such other duties, obligation, rights, or remedies.

M. Rejection of Warranties: The OCTA reserves the right to reject warranties and disallow the use of products with warranties in conflict with contract document requirements.

N. Warranty as Condition of Acceptance: The OCTA reserves the right to refuse to accept work for the project where a special warranty, certification or similar commitment is required until evidence is presented that those required to countersign such commitments are willing to do so.

1.04 PREPARATION OF WARRANTY AND GUARANTEE SUBMITTALS

A. Number of Copies: Two, unless otherwise specified or directed.

B. Special Project Warranty and Manufacturer's Guarantee Forms: Forms for Special Project Warranties and for Manufacturer's Guarantees are included in the Conditions of the Contract at the end of this Section. Prepare a written document utilizing the appropriate form, ready for execution by the Contractor or the Contractor and subcontractor, supplier or manufacturer. Submit a draft to the OCTA though OCTA Project Manager for approval prior to final execution.

1. Refer to Division 02 and higher for specific content requirements and particular requirements for submittal of special project warranties.

2. Prepare standard product warranties and product guarantees, excepting manufacturer's standard printed warranties and guarantees, on Contractor's, subcontractor's, material supplier, or manufacturer's own letterhead, addressed to the OCTA

3. Warranty and guarantee letters shall be signed by all responsible parties and by Contractor in every case, with modifications only as approved by OCTA Project Manager to suit the conditions pertaining to the warranty or guarantee.

C. Manufacturer's Guarantee Forms: Manufacturer's guarantee forms may be used in lieu of special project forms included at the end of the Section. Manufacturer's guarantee forms shall contain appropriate terms and identification, ready for execution by the required parties.

1. If proposed terms and conditions restrict guarantee coverage or require actions by the OCTA beyond those specified, submit draft of guarantee to the OCTA through Engineer for review and acceptance before performance of the work.

2. In other cases, submit draft of guarantee to OCTA Project Manager for approval prior to final execution of guarantee.

D. Signatures: By persons authorized to sign warranties, guarantees, and bonds on behalf of entity provided the warranty, guarantee, and bonds. All signatures shall be notarized.

E. Co-Signature: the Contractor shall cosign all installer's warranties and bonds Manufacturer's printed guarantees will not require co signatures.

1.05 FORM OF WARRANTY SUBMITTALS

A. Form of warranty and bond submittals: At final completion, compile 2 copies of each required warranty and guaranty and bond, properly executed by the Contractor, or by the Contractor and subcontractor, supplier or manufacturer. Collect and assemble all written warranties and guarantees into binders and deliver binders to OCTA Project Manager for final review and acceptance.

B. Prior to submission, verify that documents are in proper form, contain all required information and are properly signed.

C. Organize the warranty documents into an orderly sequence based on the table of contents of the Specifications.

D. Include a table of contents for the binder, neatly typed, following order, section names, and numbers of the Specifications.

E. Bind warranties and guarantees in heavy-duty, commercial quality, 3-ring vinyl covered loose-leaf binders, thickness as necessary to accommodate contents, with clear front and spine to receive inserts, and sized for 8 ½" by 11" paper.

F. Provide heavy paper dividers with celluloid or plastic covered tabs for each separate warranty. Mark tabs to identify products or installation, and the name, address, telephone number and responsible person for applicable installer, supplier and manufacturer.

G. Include on a separate typed sheet, if information is not contained in warranty or guarantee form, a description of the product or installation, and the name, address, telephone number, and responsible person for applicable installer, supplier, and manufacturer.

H. Identify each binder on front and spine with typed or printed inserts with title, "WARRANTIES, GUARANTEES, AND BONDS", the project title, and the name of the Contractor. If more than one volume of warranties and guarantees is produced, identify volume number of binder.

I. When operating and maintenance data manuals are required for warranted construction, include additional copies of each required warranty in each required

manual. Coordinate with requirements specified in Section 01 78 00 Closeout Submittals.

1.06 TIME OF WARRANTY AND GUARANTEE SUBMITTALS

A. Preliminary Submittal: Unless otherwise specified, obtain preliminary copies of warranties and guarantees within ten (10) calendar days of completion of applicable item or work. Prepare and submit preliminary copies for review as specified herein.

B. Final Submittal: Submit fully executed copies of warranties and guarantees within ten (10) days of date of substantial completion but not later than three (3) days prior to date of application for final payment.

C. Date of Warranties and Guarantees: Unless otherwise directed, the commencement date for warranty and guarantee periods shall be the date of established in Certificate of Completion.

D. For warranties for work such as designated systems, equipment, component part or other portion of the Work is completed, accepted, and occupied or put to beneficial use by the Authority, by a separate agreement with Contractor, prior to Final Completion, submit properly executed warranties to the Engineer within ten (10) calendar days of completion of that designated portion of the Work. List date of commencement of warranty, guaranty, or bond period as date of Acceptance.

E. For warranties for Work not accepted as of the date of substantial completion, submit documents within ten (10) calendar days after acceptance. List the commencement date as the date of acceptance of such Work and as beginning of warranty, guaranty, and bond period.

F. Duration of Warranties and Guarantees: Unless otherwise specified or prescribed by law, warranty and guaranty periods (Correction Period) for all work shall not be less than one year from the filing date of notice of completion. See product specifications Sections in contract specifications for extended warranty and guaranty beyond the minimum duration.

PARTS 2 – PRODUCTS

Not used.

PART 3 – EXECUTION

Not used.

PART 4 – MEASUREMENT AND PAYMENT

No separate measurement or payment shall be made under this Section.

END OF SECTION

WARRANTY/GUARANTEE

FOR WORK

We, the undersigned, do hereby warranty and guarantee that the parts of the Work described above which we have furnished and/or installed for the OCTA is in accordance with the Contract Documents and that all said Work as installed will fulfill or exceed all of the Warranty and Guarantee requirements. We agree to repair or replace Work installed by us, together with any adjacent Work, which is displaced or damaged by doing so, that proves to be defective in Workmanship, material, or operation within a period of one (1) year from the date of final acceptance by the OCTA or from the date of Certificate of Substantial Completion, whichever is the earlier. Ordinary wear and tear and unusual neglect or abuse is accepted.

In the event of our failure to comply with the above-mentioned conditions within a reasonable time period determined by the OCTA, after notification in writing, we, the undersigned, all collectively and separately, hereby authorize the OCTA to have said defective Work repaired and/or replaced and made good, and agree to pay to the OCTA upon demand all moneys that the OCTA may expend in making good said defective Work, including all collection cost and reasonable attorney fees.

_____
(Subcontractor, Sub subcontractor, Manufacturer, or Supplier)

By_____

Title_____

State License No._____Date_____

_____
(Contractor)

By_____

State License No._____Date_____

Local Representative. For maintenance, repair, or replacement service, contact:

Name:_____

Address:_____

Phone Number:_____

THIS PAGE DELIBERATELY LEFT BLANK

SECTION 01 79 00

DEMONSTRATION AND TRAINING

PART 1 - GENERAL

1.01 SUMMARY

A. Section Includes:

1. Administrative and procedural requirements for instructing OCTA's personnel, including the following:

a. Demonstration of operation of systems, subsystems, and equipment.

b. Training in operation and maintenance of systems, subsystems, and equipment.

c. Demonstration and training video recordings.

B. Related Sections:

1. Divisions 02 through 49 sections for specific requirements for demonstration and training for products in those sections.

1.02 INFORMATIONAL SUBMITTALS

A. Instruction Program: Submit outline of instructional program for demonstration and training, including a list of training modules and a schedule of proposed dates, times, length of instruction time, and instructors' names for each training module. Include learning objective and outline for each training module.

1. Indicate proposed training modules utilizing manufacturer-produced demonstration and training video recordings for systems, equipment, and products in lieu of video recording of live instructional module.

B. Qualification Data: For instructor.

C. Attendance Record: For each training module, submit list of participants and length of instruction time.

D. Evaluations: For each participant and for each training module, submit results and documentation of performance-based test.

1.03 CLOSEOUT SUBMITTALS

A. Demonstration and Training Video Recordings: Submit the videos within seven days of end of each training module.

1. Identification: Provide an applied label for the video files with the following information:

    a. Name of Project.

    b. Name and address of videographer.

    c. Name of OCTA Project Manager.

    d. Name of Contractor.

    e. Date of video recording.

2. At completion of training, submit complete training manual(s) for OCTA's use.

1.04 QUALITY ASSURANCE

A. Instructor Qualifications: A factory-authorized service representative, complying with requirements in Section 01 43 00, Quality Assurance, experienced in operation and maintenance procedures and training.

B. Videographer Qualifications: A professional videographer who is experienced photographing demonstration and training events similar to those required.

C. Preinstruction Conference: Conduct conference at project site to comply with requirements in Section 01 31 00, Project Management and Coordination. Review methods and procedures related to demonstration and training including, but not limited to, the following:

1. Inspect and discuss locations and other facilities required for instruction.

2. Review and finalize instruction schedule and verify availability of educational materials, instructors' personnel, audiovisual equipment, and facilities needed to avoid delays.

3. Review required content of instruction.

4. For instruction that must occur outside, review weather and forecasted weather conditions and procedures to follow if conditions are unfavorable.

1.05 COORDINATION

A. Coordinate instruction schedule with OCTA's operations. Adjust schedule as required to minimize disrupting OCTA's operations.

B. Coordinate instructors, including providing notification of dates, times, length of instruction time, and course content.

C. Coordinate content of training modules with content of approved emergency, operation, and maintenance manuals. Do not submit instruction program until operation and maintenance data has been reviewed and approved by OCTA Project Manager.

PART 2 - PRODUCTS

2.01 INSTRUCTION PROGRAM

A. Program Structure: Develop an instruction program that includes individual training modules for each system and for equipment not part of a system, as required by individual specification sections.
B. Training Modules: Develop a learning objective and teaching outline for each module. Include a description of specific skills and knowledge that participant is expected to master. For each module, include instruction for the following as applicable to the system, equipment, or component:

1. Basis of System Design, Operational Requirements, and Criteria: Include the following:

   a. System, subsystem, and equipment descriptions.
   b. Performance and design criteria if Contractor is delegated design responsibility.
   c. Operating standards.
   d. Regulatory requirements.
   e. Equipment function.
   f. Operating characteristics.
   g. Limiting conditions.
   h. Performance curves.

2. Documentation: Review the following items in detail:

   a. Emergency manuals.
   b. Operations manuals.
   c. Maintenance manuals.
   d. Project record documents.
   e. Identification systems.
   f. Warranties and bonds.
   g. Maintenance service agreements and similar continuing commitments.

3. Emergencies: Include the following, as applicable:

   a. Instructions on meaning of warnings, trouble indications, and error messages.
   b. Instructions on stopping.

c. Shutdown instructions for each type of emergency.
d. Operating instructions for conditions outside of normal operating limits.
e. Sequences for electric or electronic systems.
f. Special operating instructions and procedures.

4. Operations: Include the following, as applicable:

a. Startup procedures.
b. Equipment or system break-in procedures.
c. Routine and normal operating instructions.
d. Regulation and control procedures.
e. Control sequences.
f. Safety procedures.
g. Instructions on stopping.
h. Normal shutdown instructions.
i. Operating procedures for emergencies.
j. Operating procedures for system, subsystem, or equipment failure.
k. Seasonal and weekend operating instructions.
l. Required sequences for electric or electronic systems.
m. Special operating instructions and procedures.

5. Adjustments: Include the following:

a. Alignments.
b. Checking adjustments.
c. Noise and vibration adjustments.
d. Economy and efficiency adjustments.

6. Troubleshooting: Include the following:

a. Diagnostic instructions.
b. Test and inspection procedures.

7. Maintenance: Include the following:

a. Inspection procedures.
b. Types of cleaning agents to be used and methods of cleaning.
c. List of cleaning agents and methods of cleaning detrimental to product.
d. Procedures for routine cleaning
e. Procedures for preventive maintenance.
f. Procedures for routine maintenance.
g. Instruction on use of special tools.

8. Repairs: Include the following:

a. Diagnosis instructions.
b. Repair instructions.
c. Disassembly; component removal, repair, and replacement; and reassembly instructions.

d. Instructions for identifying parts and components.
e. Review of spare parts needed for operation and maintenance.

PART 3 – EXECUTION

3.01 PREPARATION

A. Assemble educational materials necessary for instruction, including documentation and training module. Assemble training modules into a training manual organized in coordination with requirements in Section 01 78 00, Closeout Submittals.

B. Set up instructional equipment at instruction location.

3.02 INSTRUCTIONS

A. Engage qualified instructors to instruct OCTA's personnel to adjust, operate, and maintain systems, subsystems, and equipment not part of a system.

B. OCTA Project Manager will furnish Contractor with names and positions of participants.

C. Scheduling: Provide instruction at mutually agreed on times. For equipment that requires seasonal operation, provide similar instruction at start of each season.

1. Schedule training with OCTA personnel, through OCTA Project Manager, with at least seven days' advance notice.

D. Evaluation: At conclusion of each training module, assess and document each participant's mastery of module by use of a demonstration/performance-based review.

E. Cleanup: Collect used and leftover educational materials and remove from project site. Remove instructional equipment. Restore systems and equipment to condition existing before initial training use.

3.03 DEMONSTRATION AND TRAINING VIDEO RECORDINGS

A. General: Engage a qualified commercial videographer to record demonstration and training video recordings. Record each training module separately. Include classroom instructions and demonstrations, board diagrams, and other visual aids, but not student practice.

1. At beginning of each training module, record each chart containing learning objective and lesson outline.

B. Video Recording Format: Provide high-quality color video recordings with menu navigation in format acceptable to OCTA Project Manager.

C. Recording: Mount camera on tripod before starting recording, unless otherwise necessary to show area of demonstration and training. Display continuous running time.

D. Narration: Describe scenes on video recording by audio narration by microphone while video recording is recorded. Include description of items being viewed.

E. Transcript: Provide a transcript of the narration. Display images and running time captured from videotape opposite the corresponding narration segment.

F. Pre-Produced Video Recordings: Provide video recordings used as a component of training modules in same format as recordings of live training.

PART 4 - MEASUREMENT AND PAYMENT

No separate measurement or payment will be made for this section.

END OF SECTION

SECTION 02 41 19

SELECTIVE DEMOLITION

PART 1 - GENERAL

1.01 SUMMARY

A. Section Includes:

1. Demolition and removal of selected portions of building or structure.
2. Salvage of existing items to be reused or recycled.

B. Related Requirements:

1. Section 01 73 29 "Cutting and Patching" for cutting and patching procedures.

1.02 DEFINITIONS

A. Remove: Detach items from existing construction and dispose of them off-site unless indicated to be salvaged or reinstalled.

B. Remove and Salvage: Detach items from existing construction, in a manner to prevent damage, and deliver to Owner ready for reuse or store as required.

C. Remove and Reinstall: Detach items from existing construction, in a manner to prevent damage, prepare for reuse, and reinstall where indicated.

D. Existing to Remain: Leave existing items that are not to be removed and that are not otherwise indicated to be salvaged or reinstalled.

E. Dismantle: To remove by disassembling or detaching an item from a surface, using gentle methods and equipment to prevent damage to the item and surfaces; disposing of items unless indicated to be salvaged or reinstalled.

1.03 MATERIALS OWNERSHIP

A. Unless otherwise indicated, demolition waste becomes property of Contractor.

B. Historic items, relics, antiques, and similar objects including, but not limited to, cornerstones and their contents, commemorative plaques and tablets, and other items of interest or value to Owner that may be uncovered during demolition remain the property of Owner.

1. Carefully salvage in a manner to prevent damage and promptly return to Owner.

1.04 PREINSTALLATION MEETINGS

A. Pre-demolition Conference: Conduct conference at Project site.

1. Inspect and discuss condition of construction to be selectively demolished.
2. Review structural load limitations of existing structure.
3. Review and finalize selective demolition schedule and verify availability of materials, demolition personnel, equipment, and facilities needed to make progress and avoid delays.
4. Review requirements of work performed by other trades that rely on substrates exposed by selective demolition operations.
5. Review areas where existing construction is to remain and requires protection.

1.05 INFORMATIONAL SUBMITTALS

A. Qualification Data: For refrigerant recovery technician.

B. Proposed Protection Measures: Submit report, including Drawings, that indicates the measures proposed for protecting individuals and property, for environmental protection and for dust control. Indicate proposed locations and construction of barriers.

C. Schedule of Selective Demolition Activities: Indicate the following:

1. Detailed sequence of selective demolition and removal work, with starting and ending dates for each activity. Ensure Owner's building manager's on-site operations are uninterrupted.
2. Interruption of utility services. Indicate how long utility services will be interrupted.
3. Coordination for shutoff, capping, and continuation of utility services.
4. Use of elevator and stairs.
5. Coordination of Owner's continuing occupancy of portions of existing building and of Owner's partial occupancy of completed Work.

D. Pre-demolition Photographs or Video: Show existing conditions of adjoining construction, including finish surfaces, that might be misconstrued as damage caused by salvage and demolition operations. Submit before Work begins.

E. Warranties: Documentation indicating that existing warranties are still in effect after completion of selective demolition.

1.06 CLOSEOUT SUBMITTALS

A. Inventory: Submit a list of items that have been removed and salvaged.

1.07 FIELD CONDITIONS

A. Owner will occupy portions of building immediately adjacent to selective demolition area. Conduct selective demolition so Owner's operations will not be disrupted.

B. Conditions existing at time of inspection for bidding purpose will be maintained by Owner as far as practical.

C. Notify Architect of discrepancies between existing conditions and Drawings before proceeding with selective demolition.

D. Hazardous Materials: It is not expected that hazardous materials will be encountered in the Work.

1. If suspected hazardous materials are encountered, do not disturb; immediately notify Architect and Owner. Hazardous materials will be removed by Owner under a separate contract.

E. Storage or sale of removed items or materials on-site is not permitted.

F. Utility Service: Maintain existing utilities indicated to remain in service and protect them against damage during selective demolition operations.

1. Maintain fire-protection facilities in service during selective demolition operations.

1.08 COORDINATION

A. Arrange selective demolition schedule so as not to interfere with Owner's operations.

PART 2 - PRODUCTS

2.01 PERFORMANCE REQUIREMENTS

A. Regulatory Requirements: Comply with governing EPA notification regulations before beginning selective demolition. Comply with hauling and disposal regulations of authorities having jurisdiction.

B. Standards: Comply with ANSI/ASSP A10.6 and NFPA 241.

C. Sustainable Design Requirements for Building Reuse:

1. Maintain existing interior nonstructural elements (interior walls, doors, floor coverings, and ceiling systems) not indicated to be demolished; do not demolish such existing construction beyond indicated limits.

PART 3 - EXECUTION

3.01 EXAMINATION

A. Verify that utilities have been disconnected and capped before starting selective demolition operations.

B. Review Project Record Documents of existing construction or other existing condition and hazardous material information provided by Owner. Owner does not guarantee that existing conditions are same as those indicated in Project Record Documents.

C. Steel Reinforcing: Locate steel reinforcing and include recommendations for x-raying and identifying reinforcing in slabs

D. Survey of Existing Conditions: Record existing conditions by use of measured drawings.

1. Inventory and record the condition of items to be removed and salvaged. Provide photographs or video of conditions that might be misconstrued as damage caused by salvage operations.
2. Before selective demolition or removal of existing building elements that will be reproduced or duplicated in final Work, make permanent record of measurements, materials, and construction details required to make exact reproduction.

3.02 PREPARATION

A. Refrigerant: Before starting demolition, remove refrigerant from mechanical equipment according to 40 CFR 82 and regulations of authorities having jurisdiction.

3.03 UTILITY SERVICES AND MECHANICAL/ELECTRICAL SYSTEMS

A. Existing Services/Systems to Remain: Maintain services/systems indicated to remain and protect them against damage.

B. Existing Services/Systems to Be Removed, Relocated, or Abandoned: Locate, identify, disconnect, and seal or cap off utility services and mechanical/electrical systems serving areas to be selectively demolished.

1. If services/systems are required to be removed, relocated, or abandoned, provide temporary services/systems that bypass area of selective demolition and that maintain continuity of services/systems to other parts of building.
2. Disconnect, demolish, and remove HVAC systems, equipment, and components indicated on Drawings to be removed.

a. Piping to Be Removed: Remove portion of piping indicated to be removed and cap or plug remaining piping with same or compatible piping material.

b. Equipment to Be Removed: Disconnect and cap services and remove equipment.

c. Equipment to Be Removed and Reinstalled: Disconnect and cap services and remove, clean, and store equipment; when appropriate, reinstall, reconnect, and make equipment operational.

d. Equipment to Be Removed and Salvaged: Disconnect and cap services and remove equipment and deliver to Owner.

e. Ducts to Be Removed: Remove portion of ducts indicated to be removed and plug remaining ducts with same or compatible ductwork material.

f. Ducts to Be Abandoned in Place: Cap or plug ducts with same or compatible ductwork material and leave in place.

3.04 PROTECTION

A. Temporary Protection: Provide temporary barricades and other protection required to prevent injury to people and damage to adjacent buildings and facilities to remain.

1. Provide protection to ensure safe passage of people around selective demolition area and to and from occupied portions of building.

2. Protect walls, ceilings, floors, and other existing finish work that are to remain or that are exposed during selective demolition operations.

3. Cover and protect furniture, furnishings, and equipment that have not been removed.

4. Comply with requirements for temporary enclosures, dust control, heating, and cooling specified in Section 01 50 00 "Temporary Facilities and Controls."

B. Temporary Shoring: Design, provide, and maintain shoring, bracing, and structural supports as required to preserve stability and prevent movement, settlement, or collapse of construction and finishes to remain, and to prevent unexpected or uncontrolled movement or collapse of construction being demolished.

1. Strengthen or add new supports when required during progress of selective demolition.

C. Remove temporary barricades and protections where hazards no longer exist.

3.05 SELECTIVE DEMOLITION, GENERAL

A. General: Demolish and remove existing construction only to the extent required by new construction and as indicated. Use methods required to complete the Work within limitations of governing regulations and as follows:

1. Proceed with selective demolition systematically, from higher to lower level. Complete selective demolition operations above each floor or tier before disturbing supporting members on the next lower level.
2. Neatly cut openings and holes plumb, square, and true to dimensions required. Use cutting methods least likely to damage construction to remain or adjoining construction. Use hand tools or small power tools designed for sawing or grinding, not hammering and chopping. Temporarily cover openings to remain.
3. Cut or drill from the exposed or finished side into concealed surfaces to avoid marring existing finished surfaces.
4. Do not use cutting torches until work area is cleared of flammable materials. At concealed spaces, such as duct and pipe interiors, verify condition and contents of hidden space before starting flame-cutting operations. Maintain portable fire-suppression devices during flame-cutting operations.
5. Maintain fire watch during and for at least two hours after flame-cutting operations.
6. Maintain adequate ventilation when using cutting torches.
7. Remove decayed, vermin-infested, or otherwise dangerous or unsuitable materials and promptly dispose of off-site.
8. Locate selective demolition equipment and remove debris and materials so as not to impose excessive loads on supporting walls, floors, or framing.
9. Dispose of demolished items and materials promptly. Comply with requirements in Section 01 74 19 "Construction Waste Management and Disposal."

B. Site Access and Temporary Controls: Conduct selective demolition and debris-removal operations to ensure minimum interference with roads, streets, walks, walkways, and other adjacent occupied and used facilities.

C. Removed and Salvaged Items:

1. Clean salvaged items.
2. Pack or crate items after cleaning. Identify contents of containers.
3. Store items in a secure area until delivery to Owner.
4. Transport items to Owner's storage area designated by Owner.
5. Protect items from damage during transport and storage.

D. Removed and Reinstalled Items:

1. Clean and repair items to functional condition adequate for intended reuse.
2. Pack or crate items after cleaning and repairing. Identify contents of containers.
3. Protect items from damage during transport and storage.

4. Reinstall items in locations indicated. Comply with installation requirements for new materials and equipment. Provide connections, supports, and miscellaneous materials necessary to make item functional for use indicated.

E. Existing Items to Remain: Protect construction indicated to remain against damage and soiling during selective demolition. When permitted by Architect, items may be removed to a suitable, protected storage location during selective demolition[and cleaned] and reinstalled in their original locations after selective demolition operations are complete.

3.06 SELECTIVE DEMOLITION PROCEDURES FOR SPECIFIC MATERIALS

A. Concrete: Demolish in small sections. Using power-driven saw, cut concrete to a depth of at least 3/4 inch at junctures with construction to remain. Dislodge concrete from reinforcement at perimeter of areas being demolished, cut reinforcement, and then remove remainder of concrete. Neatly trim openings to dimensions indicated.

B. Concrete Slabs-on-Grade: Saw-cut perimeter of area to be demolished, and then break up and remove.

3.07 DISPOSAL OF DEMOLISHED MATERIALS

A. Remove demolition waste materials from Project site and dispose of them in an EPA-approved construction and demolition waste landfill acceptable to authorities having jurisdiction.

1. Do not allow demolished materials to accumulate on-site.
2. Remove and transport debris in a manner that will prevent spillage on adjacent surfaces and areas.
3. Comply with requirements specified in Section 01 74 19 "Construction Waste Management and Disposal."

B. Burning: Do not burn demolished materials.

3.08 CLEANING

A. Clean adjacent structures and improvements of dust, dirt, and debris caused by selective demolition operations. Return adjacent areas to condition existing before selective demolition operations began.

END OF SECTION 02 41 19

SECTION 07 52 16

STYRENE-BUTADIENE-STYRENE (SBS) MODIFIED BITUMINOUS MEMBRANE ROOFING

PART 1 - GENERAL

1.1 RELATED DOCUMENTS

A. Drawings and general provisions of the Contract, including General and Supplementary Conditions and Division 01 Specification Sections, apply to this Section.

1.2 SUMMARY

A. Section Includes:

1. Patching existing modified bituminous membrane roofing on existing metal decking.
2. Hybrid roofing system that combines built-up ply sheets with modified bituminous membrane roofing to match existing.

1.3 DEFINITIONS

A. Roofing Terminology: Definitions in ASTM D 1079 and glossary of NRCA's "The NRCA Roofing and Waterproofing Manual" apply to work of this Section.

1.4 PREINSTALLATION MEETINGS

A. Preliminary Roofing Conference: Before starting roof deck construction, conduct conference at Project site.

1. Meet with Owner, Architect, Owner's insurer if applicable, testing and inspecting agency representative, roofing Installer, roofing system manufacturer's representative, and installers whose work interfaces with or affects roofing, including installers of roof accessories and roof-mounted equipment.
2. Review methods and procedures related to roofing installation, including manufacturer's written instructions.
3. Review and finalize construction schedule, and verify availability of materials, Installer's personnel, equipment, and facilities needed to make progress and avoid delays.
4. Review deck substrate requirements for conditions and finishes, including flatness and fastening.
5. Review structural loading limitations of roof deck during and after roofing.
6. Review base flashings, special roofing details, roof drainage, roof penetrations, equipment curbs, and condition of other construction that affects roofing system.
7. Review governing regulations and requirements for insurance and certificates if applicable.

8. Review temporary protection requirements for roofing system during and after installation.
9. Review roof observation and repair procedures after roofing installation.
10. Review existing roofing warranty requirements.

1.5 ACTION SUBMITTALS

A. Product Data: For each type of product.

B. Sustainable Design Submittals:

1. Product Test Reports: For roof materials, documentation indicating that roof materials comply with Solar Reflectance Index and Thermal Emittance requirements.

C. Shop Drawings: For roofing system. Include plans, elevations, sections, details, and attachments to other work, including:

1. Base flashings and membrane terminations.

D. Samples for Verification: For the following products:

1. Cap sheet, of color required.
2. Flashing sheet, of color required.

1.6 INFORMATIONAL SUBMITTALS

A. Qualification Data: For Installer and testing agency.

B. Manufacturer Certificates: Signed by roofing manufacturer certifying that roofing system complies with requirements specified in "Performance Requirements" Article.

1. Submit evidence of complying with performance requirements.

C. Product Test Reports: For components of membrane roofing system, for tests performed by manufacturer and witnessed by a qualified testing agency.

D. Research/Evaluation Reports: For components of membrane roofing system, from ICC-ES.

E. Field quality-control reports.

F. Sample Warranties: For manufacturer's special warranties.

1.7 CLOSEOUT SUBMITTALS

A. Maintenance Data: For roofing system to include in maintenance manuals.

1.8 QUALITY ASSURANCE

A. Manufacturer Qualifications: A qualified manufacturer that is UL listed for membrane roofing system identical to that used for this Project.

B. Installer Qualifications: A qualified firm that is approved, authorized, or licensed by roofing system manufacturer to install manufacturer's product and that is eligible to receive manufacturer's special warranty.

1.9 DELIVERY, STORAGE, AND HANDLING

A. Deliver roofing materials to Project site in original containers with seals unbroken and labeled with manufacturer's name, product brand name and type, date of manufacture, approval or listing agency markings, and directions for storing and mixing with other components.

B. Store liquid materials in their original undamaged containers in a clean, dry, protected location and within the temperature range required by roofing system manufacturer. Protect stored liquid material from direct sunlight.

1. Discard and legally dispose of liquid material that cannot be applied within its stated shelf life.

C. Protect roof insulation materials from physical damage and from deterioration by sunlight, moisture, soiling, and other sources. Store in a dry location. Comply with insulation manufacturer's written instructions for handling, storing, and protecting during installation.

D. Handle and store roofing materials, and place equipment in a manner to avoid permanent deflection of deck.

1.10 FIELD CONDITIONS

A. Weather Limitations: Proceed with installation only when existing and forecasted weather conditions permit roofing system to be installed according to manufacturer's written instructions and warranty requirements.

1.11 WARRANTY

A. Special Warranty: Manufacturer agrees to repair or replace components of roofing system that fail in materials or workmanship within specified warranty period.

1. Special warranty includes membrane roofing, base flashings, fasteners, cover boards, roofing accessories, and other components of roofing system.
2. Warranty Period: Provide modified bituminous roofing products to match existing and maintain existing roofing warranty.

B. Special Project Warranty: Submit roofing Installer's warranty, on warranty form at end of this Section, signed by Installer, covering the Work of this Section, including all components of roofing system such as membrane roofing, base flashing, fasteners, cover boards, substrate boards, for the following warranty period:

1. Warranty Period: One year from date of Substantial Completion.

PART 2 - PRODUCTS

2.1 MANUFACTURERS

A. Manufacturers: Subject to compliance with requirements, available manufacturers offering products that may be incorporated into the Work include, but are not limited to the following:

1. CertainTeed Corporation.
2. Firestone Building Products.
3. Johns Manville; a Berkshire Hathaway company.
4. Tremco Incorporated.
5. Or approved equal.

B. Source Limitations: Obtain components including fasteners for roofing system from same manufacturer as membrane roofing or manufacturer approved by membrane roofing manufacturer.

2.2 PERFORMANCE REQUIREMENTS

A. General Performance: Installed roofing and base flashings shall withstand specified uplift pressures, thermally induced movement, and exposure to weather without failure due to defective manufacture, fabrication, installation, or other defects in construction. Roofing and base flashings shall remain watertight.

1. Accelerated Weathering: Roofing system shall withstand 2000 hours of exposure when tested according to ASTM G 152, ASTM G 154, or ASTM G 155.
2. Impact Resistance: Roofing system shall resist impact damage when tested according to ASTM D 3746 or ASTM D 4272.

B. Material Compatibility: Roofing materials shall be compatible with one another and adjacent materials under conditions of service and application required, as demonstrated by roofing manufacturer based on testing and field experience.

C. FM Global Listing: Roofing, base flashings, and component materials shall comply with requirements in FM Global 4450 or FM Global 4470 as part of a roofing system, and shall be listed in FM Global's "RoofNav" for Class 1 or noncombustible construction, as applicable. Identify materials with FM Global markings.

1. Fire/Windstorm Classification: Class 1A-90.
2. Hail-Resistance Rating: MH.

D. Solar Reflectance Index (SRI): Provide roofing system with Solar Reflectance Index not less than 78 when calculated according to ASTM E1980 based on testing identical products by a qualified testing agency; for roof slopes less than or equal to 2:12.

E. Energy Star Listing: Roofing system shall be listed on the DOE's ENERGY STAR "Roof Products Qualified Product List" for low-slope roof products.

F. Exterior Fire-Test Exposure: ASTM E 108 or UL 790, Class A; for application and roof slopes indicated; testing by a qualified testing agency. Identify products with appropriate markings of applicable testing agency.

G. Fire-Resistance Ratings: Comply with fire-resistance-rated assembly designs indicated. Identify products with appropriate markings of applicable testing agency.

2.3 ROOFING SHEET MATERIALS

A. Sheathing Paper: Red-rosin type, minimum 3 lb/100 sq. ft. (0.16 kg/sq. m) where required to match existing at wood roof deck.

B. Base Sheet: SBS-modified asphalt-impregnated and -coated sheet, with polyester -reinforcing mat, smooth surfaced, or product to match existing and suitable for cold application method specified.

1. Weight: To match existing.

C. Roofing Membrane Sheet: ASTM D 6164/D 6164M, Grade G, Type I or II, SBS-modified asphalt sheet (reinforced with polyester fabric); granule surfaced; or product to match existing, and suitable for cold application method.

2.4 BASE FLASHING SHEET MATERIALS

A. Backer Sheet: ASTM D 6164/D 6164M, Grade S, Type I, SBS-modified asphalt sheet (reinforced with polyester fabric); smooth surfaced; suitable for application method specified.

B. Granule-Surfaced Flashing Sheet: ASTM D 6164/D 6164M, Grade G, Type I or II, SBS-modified asphalt sheet (reinforced with polyester fabric); granule surfaced; suitable for cold application method, and as follows:

1. Granule Color: To match existing.
2. Basis-of-Design Product: Subject to compliance with requirements, provide JM DynaLastic 250 FR CR, or product to match existing.

2.5 AUXILIARY ROOFING MATERIALS

A. General: Auxiliary materials recommended by roofing system manufacturer for intended use and compatible with roofing.

1. Liquid-type auxiliary materials shall comply with VOC limits of authorities having jurisdiction.

B. Asphalt Primer: High flash, quick drying, asphalt solvent blend which meets or exceeds ASTM D 41/D 41M.

C. Roofing Asphalt: ASTM D 312, to match existing and as recommended by roofing system manufacturer for application.

D. Roofing Asphalt: ASTM D 6152, SEBS modified.

E. Cold-Applied Adhesive: Roofing system manufacturer's standard asphalt-based, two-part, asbestos-free, cold-applied adhesive specially formulated for compatibility and use with roofing membrane and base flashings.

F. Cold-Applied Flashing Adhesive: Roofing system manufacturer's asphalt-based, two-component, asbestos-free, trowel-grade, cold-applied adhesive specially formulated for compatibility and use with flashing applications.

G. Asphalt Roofing Cement: ASTM D 4586 Type II, asbestos free, of consistency required by roofing system manufacturer for application.

H. Mastic Sealant: Polyisobutylene, plain or modified bitumen; nonhardening, nonmigrating, nonskinning, and nondrying; or as recommended by roofing manufacturer.

I. Fasteners: Factory-coated steel fasteners and metal or plastic plates complying with corrosion-resistance provisions in FM Global 4470, designed for fastening roofing components to substrate; tested by manufacturer for required pullout strength, and acceptable to roofing system manufacturer.

J. Roofing Granules: Ceramic-coated roofing granules, No. 11 screen size with 100 percent passing No. 8 (2.36-mm) sieve and 98 percent of mass retained on No. 40 (0.425-mm) sieve, color to match roofing.

K. Miscellaneous Accessories: Provide those recommended by roofing system manufacturer.

2.6 SUBSTRATE BOARDS

A. Substrate Board: ASTM C 1177/C 1177M, glass-mat, water-resistant gypsum substrate, 1/2 inch (13 mm) thick or as required to match existing, factory primed.

1. Products: Subject to compliance with requirements, available products that may be incorporated into the Work include, but are not limited to the following:

a. CertainTeed Corporation; GlasRoc Sheathing.
b. Georgia-Pacific Gypsum LLC; Dens Deck.
c. National Gypsum Company; DEXcell FA Glass Mat Roof Board.
d. USG Corporation; Securock Glass Mat Roof Board.
e. Or approved equal.

B. Fasteners: Factory-coated steel fasteners and metal or plastic plates complying with corrosion-resistance provisions in FM Global 4470, designed for fastening substrate board to roof deck.

PART 3 - EXECUTION

3.1 EXAMINATION

A. Examine substrates, areas, and conditions, with Installer present, for compliance with requirements and other conditions affecting performance of the Work:

1. Verify that roof openings and penetrations are in place, curbs are set and braced, and roof-drain bodies are securely clamped in place.
2. Verify that wood cants, blocking, curbs, and nailers are securely anchored to roof deck at penetrations and terminations and that nailers match thicknesses of insulation.
3. Verify that deck is securely fastened with no projecting fasteners and with no adjacent units in excess of 1/16 inch (1.6 mm) out of plane relative to adjoining deck.

    a. Test for moisture by pouring 1 pint (0.5 L) of hot roofing asphalt on deck at start of each day's work and at start of each roof area or plane. Do not proceed with Work of this Section if test sample foams or can be easily and cleanly stripped after cooling.

B. Proceed with installation only after unsatisfactory conditions have been corrected.

3.2 PREPARATION

A. Clean substrate of dust, debris, moisture, and other substances detrimental to roofing installation according to roofing system manufacturer's written instructions. Remove sharp projections.

B. Prevent materials from entering and clogging roof drains and conductors and from spilling or migrating onto surfaces of other construction. Remove roof-drain plugs when no work is taking place or when rain is forecast.

3.3 INSTALLATION, GENERAL

A. Comply with roofing system manufacturer's written instructions.

B. Apply SEBS-modified roofing asphalt according to roofing system manufacturer's written instructions.

C. Substrate-Joint Penetrations: Prevent roofing asphalt and adhesives from penetrating substrate joints, entering building, or damaging roofing system components or adjacent building construction.

3.4 SUBSTRATE BOARD INSTALLATION

A. Install substrate board where needed to match existing, with long joints in continuous straight lines, perpendicular to roof slopes with end joints staggered between rows. Tightly butt substrate boards together.

1. Fasten substrate board to top flanges of steel deck according to recommendations in FM Global's "RoofNav" and FM Global Loss Prevention Data Sheet 1-29 for specified Windstorm Resistance Classification.
2. Fasten substrate board to top flanges of steel deck to resist uplift pressure at corners, perimeter, and field of roof according to roofing system manufacturers' written instructions.

3.5 ROOFING INSTALLATION, GENERAL

A. Install roofing system according to roofing system manufacturer's written instructions and applicable recommendations in ARMA/NRCA's "Quality Control Guidelines for the Application of Polymer Modified Bitumen Roofing" and as follows:

1. Deck Type: N (nailable).
2. Adhering Method: L (cold-applied adhesive).
3. Base Sheet: To match existing..
4. Number of Glass-Fiber Base-Ply Sheets: To match existing..
5. Number of SBS-Modified Asphalt Sheets: To match existing.
6. Surfacing Type: A (aggregate).

B. Start installation of roofing in presence of manufacturer's technical personnel.

C. Coordinate installation of roofing system so insulation and other components of the roofing system not permanently exposed are not subjected to precipitation or left uncovered at the end of the workday or when rain is forecast.

1. Provide tie-offs at end of each day's work to cover exposed roofing sheets and insulation with a course of coated felt set in roofing cement or hot roofing asphalt, with joints and edges sealed.
2. Complete terminations and base flashings, and provide temporary seals to prevent water from entering completed sections of roofing system.
3. Remove and discard temporary seals before beginning work on adjoining roofing.

3.6 BASE-SHEET INSTALLATION

A. Loosely lay one course of sheathing paper where needed to match existing, lapping edges and ends a minimum of 2 inches (50 mm) and 6 inches (150 mm), respectively.

B. Install lapped base-sheet course, extending sheet over and terminating beyond cants. Attach base sheet as follows:

1. Mechanically fasten to existing wood substrate.

3.7 BASE-PLY SHEET INSTALLATION

A. Install glass-fiber base-ply sheets according to roofing system manufacturer's written instructions starting at low point of roofing system. Align glass-fiber base-ply sheets without stretching. Extend sheets over and terminate beyond cants.

3.8 SBS-MODIFIED BITUMINOUS MEMBRANE INSTALLATION

A. Install modified bituminous roofing cap sheet according to roofing manufacturer's written instructions, starting at low point of roofing system. Extend roofing membrane sheets over and terminate beyond cants, installing as follows:

1. Adhere to substrate in cold-applied adhesive.
2. Unroll roofing sheets and allow them to relax for minimum time period required by manufacturer.

B. Laps: Accurately align roofing sheets, without stretching, and maintain uniform side and end laps. Stagger end laps. Completely bond and seal laps, leaving no voids.

1. Repair tears and voids in laps and lapped seams not completely sealed.
2. Apply roofing granules to cover exuded bead at laps while bead is hot.
3. Minimum 48” overlap of new to existing sheets.

C. Install roofing sheets so side and end laps shed water.

D. Aggregate Surfacing: After installing and testing roofing, base flashing, and stripping, promptly apply flood coat to roof surface with 60 lb/100 sq. ft. (3 kg/sq. m) of roofing asphalt. While flood coat is fluid, cast the following average weight of aggregate in a uniform course:

1. Aggregate Weight: 400 lb/100 sq. ft. (20 kg/sq. m).

3.9 FLASHING AND STRIPPING INSTALLATION

A. Install base flashing over cant strips and other sloped and vertical surfaces, at roof edges, and at penetrations through roof, and secure to substrates according to roofing system manufacturer's written instructions and as follows:

1. Prime substrates with asphalt primer if required by roofing system manufacturer.
2. Backer-Sheet Application: Mechanically fasten backer sheet to walls or parapets. Adhere backer sheet over roofing membrane at cants in cold-applied adhesive.

3. Flashing-Sheet Application: Adhere flashing sheet to substrate in cold-applied adhesive at rate required by roofing system manufacturer.

B. Extend base flashing up walls or parapets a minimum of 8 inches (200 mm) above roofing membrane and 4 inches (100 mm) onto field of roofing membrane.

C. Mechanically fasten top of base flashing securely at terminations and perimeter of roofing.

1. Seal top termination of base flashing.

D. Install roofing cap-sheet stripping where metal flanges and edgings are set on roofing according to roofing system manufacturer's written instructions.

3.10 FIELD QUALITY CONTROL

A. Final Roof Inspection: Arrange for roofing system manufacturer's technical personnel to inspect roofing installation on completion.

1. Notify Architect and Owner 48 hours in advance of date and time of inspection.

B. Roofing system will be considered defective if it does not pass tests and inspections.

1. Additional testing and inspecting, at Contractor's expense, will be performed to determine if replaced or additional work complies with specified requirements.

3.11 PROTECTING AND CLEANING

A. Protect roofing system from damage and wear during remainder of construction period. When remaining construction does not affect or endanger roofing, inspect roofing for deterioration and damage, describing its nature and extent in a written report, with copies to Architect and Owner.

B. Correct deficiencies in or remove roofing system that does not comply with requirements, repair substrates, and repair or reinstall roofing system to a condition free of damage and deterioration at time of Substantial Completion and according to warranty requirements.

C. Clean overspray and spillage from adjacent construction using cleaning agents and procedures recommended by manufacturer of affected construction.

END OF SECTION

SECTION 11 11 33
INDUSTRIAL SHOP FUME EXTRACTION AND VACUUM EQUIPMENT

PART 1 - GENERAL

1.01 RELATED DOCUMENTS

A. Drawings and general provisions of the Contract, including General and Supplementary Conditions and Division 01 Specification Sections, apply to this Section.

1.02 SUMMARY

A. Section includes:

1. Rooftop Cyclone Unit, 4 stations

B. Related Requirements:

1. Section 01 60 00 "Product Requirements " for selection of products for use, product delivery, storage, and handing.
2. Section 01 73 29 “Execution” for Cutting and patching

1.03 REFERENCES

A. Definitions:

1. ICC-ES: ICC-Evaluation Service.
2. OSHPD: Office of Statewide Health Planning & Development (for the State of California).
   i. OPA: OSHPD Preapproval of Anchorage.
3. Reference Standards:
   i. NFPA - National Fire Protection Association.
      1. NFPA 70 National Electrical Code (NEC).

1.04 COORDINATION

A. Coordinate size and location of recesses and inserts in concrete and masonry required for installation of equipment.

B. Coordinate sizes and locations of blocking and backing required for installation of equipment attached to wall and ceiling assemblies.

C. Coordinate locations and installation of fume extraction and vacuum equipment that may interfere with ceiling systems including lighting, HVAC, speakers, sprinklers, access panels, electrical switches or outlets, and floor drains.

D. Coordinate locations and requirements of utility service connections.

1.05 PRE-INSTALLATION MEETINGS

A. Preinstallation Conference: Conduct conference at Project site.

1.06 ACTION SUBMITTALS

A. Product Data: For each type of product. Clearly mark each submittal to show which products and options are applicable; do not include manufacturer's complete catalog when pertinent information is contained on a selected page(s). Include the following:

1. Manufacturer's model number.
2. Accessories and components that will be included for Project.
3. Rated capacities, operating characteristics, electrical characteristics.
4. Dimensions, weights, imposed loads and forces, required clearances, and locations and sizes of mechanical and electrical connections.
5. Diagrams of electrical and pneumatic controls.
6. Clearance requirements for access and maintenance.
7. Utility service connections for electrical power and controls, plumbing, compressed air, and other utility services as applicable. Include rough-in dimensions.

B. Shop Drawings: For custom fabricated fume extraction and vacuum equipment. Include plans, elevations, sections, rough-in dimensions, fabrication details, utility service requirements, and attachments to other work.

C. Seismic Restraint Product Data: Equipment requiring seismic restraint are itemized under Part 2 Article "Performance Requirements."

1. Illustrate and indicate style, material, strength, fastening provision, and finish for each type and size of seismic-restraint component required.
2. Include one of the following types of submittals, for each type of fume extraction and vacuum equipment, substantiating that seismic restraint is suitable for conditions indicated.

a. Preapproved Ratings: Documentation based on preapproved ratings are preferred. Ratings shall be based on horizontal and vertical load testing and analysis.

1) Provide ratings from one of the following:

a) ICC-ES.
b) OPA number from OSHPD.
c) An agency acceptable to authorities having jurisdiction.

2) For seismic anchorage with preapproved rating, restraint devices shall bear anchorage preapproval showing maximum seismic-restraint ratings by rating agency submitted.
3) If preapproved ratings are unavailable, submittals based on independent testing are preferred.

b. Independent Testing: Ratings based on testing by a qualified independent testing agency.

1) Documentation based on independent testing are preferred to ratings based on calculations.

c. Delegated Design: If preapproved rating documentation or independent testing documentation are not available, provide calculations. Calculations (including combining shear and tensile loads) to support seismic restraint designs must be signed and sealed by a qualified professional engineer.

D. Samples for Initial Selection: For units with factory-applied color finishes.

E. Samples for Verification: For each factory-applied color finish required, in manufacturer's standard sizes.

F. Product Schedule: For fume extraction and vacuum equipment. Use same equipment number indicated in Specifications and on Drawings.

1.07 INFORMATIONAL SUBMITTALS

A. Qualification Data: For Installer of the following:

1. Fume extraction and vacuum equipment permanently fixed in place.
2. Fume extraction and vacuum equipment permanently connected to electrical power, plumbing, compressed air, and other utility services.

B. Field quality-control reports.

C. Sample Warranties: For manufacturers' special warranties.

1.08 CLOSEOUT SUBMITTALS

A. Operation and Maintenance Data: For each fume extraction and vacuum equipment unit to include in operation and maintenance manuals. In addition to items specified in Section 01 78 23 "Operation and Maintenance Data," include a product schedule for each fume extraction and vacuum equipment unit; include the following:

1. Equipment number used in Specifications and on Drawings.
2. Manufacturer's name and model number.

3. Contact Information:

    a. A list of factory-authorized service representative(s). Include street address, telephone number(s), and email address for each.
    b. List of supplier(s) for repair parts. Include street address, telephone number(s), and email address for each.

4. Description of system and components.
5. Schematic Diagrams: For electrical power and controls, plumbing, compressed air, and other utility services as applicable.
6. Operating Instructions: In writing by manufacturer.
7. Preventative Maintenance: A written schedule of recommended procedures and frequency required to validate warranties. Failure to provide preventative maintenance information will indicate that it is not a condition for validation of warranties.
8. List of manufacturer recommended maintenance materials required for 1 year of normal equipment operations.

1.09 QUALITY ASSURANCE

A. Manufacturer Qualifications: A firm with not less than 5 years experience in manufacturing fume extraction and vacuum equipment units similar to those indicated for this Project and with a record of successful in-service performance, as well as sufficient production capacity to produce required units. As applicable, procure products from manufacturers able to meet qualification requirements, warranty requirements, and technical or factory-authorized service representative requirements.

    1. Manufacturer’s Service Center: Located within **100 miles** of Project site; capable of providing training, parts, and emergency maintenance repairs.

    2. Technical or factory-Authorized Service Representative Qualifications: An authorized representative of manufacturer who is trained and approved by fume extraction and vacuum equipment manufacturer to observe and inspect installation of manufacturer's products that are similar in material, design, and extent to those indicated for this Project.

B. Installer Qualifications: A firm or individual experienced in installing or assembling fume extraction and vacuum equipment units similar in material, design, and extent to that indicated for this Project, whose work has resulted in construction with a record of successful in-service performance.

C. The requirements for each type of fume extraction and vacuum equipment specify the minimum level of quality, features, performance, and construction; and originate from the basis of design product indicated.

1.10 DELIVERY, STORAGE, AND HANDING

A. Deliver, store, and handle materials, components, and equipment in manufacturer's

protective packaging.

1. Packaging shall be suitable for protection during shipment and storage in humid and dusty conditions.
2. Outside of packaging shall be indelibly labeled with fume extraction and vacuum equipment description and number used in this specification, and with description of contents. Packaging within packaging shall be similarly labeled.
3. Each equipment item shall be delivered complete in one shipment.

B. Prior to acceptance, verify that delivery is not damaged from shipping and weather exposure. Compare packaged contents with packing list to verify complete receipt of equipment and accessories specified.

C. Store materials, components, and equipment off the ground, under cover, and in a dry location.

1.11 FIELD CONDITIONS

A. Environmental Limitations: Do not deliver or install fume extraction and vacuum equipment until spaces are enclosed and weathertight, wet work in spaces is complete and dry, and temporary HVAC system is operating and maintaining ambient temperature and humidity conditions at levels intended for building occupants during the remainder of the construction period.

1.12 WARRANTY

A. Manufacturer’s Special Warranty: Manufacturer agrees to repair, restore, or replace fume extraction and vacuum equipment units that fail in materials or workmanship within specified warranty period.

B. Failures include, but are not limited to:

1. Operation or control system failure, including excessive malfunctions.
2. Performances below specified ratings.
3. Excessive wear, rough operation, premature parts damage, loosening or loss, all resulting from normal operations.
4. Deterioration of metals, metal finishes, and other materials beyond normal wear.
5. Unsafe conditions.
6. Need for excessive maintenance.
7. Abnormal noise or vibration.
8. Rough and substandard operation.
9. Loose, damaged, and missing parts.

C. Defects shall not include damage due to neglect, misuse, or situations resulting from non-performance of a manufacturer's recommended preventive maintenance schedule.

D. Warranty Period: 1 year from date of Substantial Completion.

PART 2 – PRODUCTS

2.01 SUBSTITUTION LIMITATIONS

A. Comply with administrative and procedural requirements of Section 01 25 00 "Substitution Procedures."

1. If substitutions are allowed, acceptance will be substantially based contractor's completeness in preparing comparative data (differences and similarities) between specified product or material and proposed substitution. Include attributes of specified product or material (i.e. description, reference standard, performance requirement) and corresponding attributes of substitution.

2.02 MAINTENANCE MATERIALS

A. Repair parts for fume extraction and vacuum equipment shall be readily available from part suppliers located in the United States.

1. Repair parts shall be available for no less than 7 years from date of Substantial Completion.
2. Emergency parts orders shall be available for delivery within 24 hours.
3. Routine parts orders shall be available for delivery within 72 hours.

2.03 REGULATORY REQUIREMENTS

A. Electrical Components, Devices, and Accessories: Listed and labeled as defined in NFPA 70, by a qualified testing agency, and marked for intended location and application.

B. Comply with Federal, State, and local laws, regulations, and safety standards.

2.04 PERFORMANCE REQUIREMENTS

A. Seismic Restraint:

1. The following fume extraction and vacuum equipment shall be installed with seismic-restraint devices.

   a. Rooftop Cyclone Unit, 4 stations

2. Seismic Performance: vacuum equipment units shall withstand the effects of earthquake motions determined according to ASCE/SEI 7.

   a. Component Importance Factor: 1.0
   b. Other Seismic Performance and Design Criteria. See Structural Drawings.

2.06 EQUIPMENT LABELING

A. Label each major item of equipment with a non-corrosive label with the following information permanently applied:

1. Manufacturer's name and address.
2. Equipment model number and serial number.
3. Pertinent utility and operating data.

B. Label Material and Thickness: Either of following:

1. Brass, 0.032 inch minimum thickness.
2. Stainless steel, 0.025 inch minimum thickness.
3. Aluminum, 0.032 inch minimum thickness.
4. Anodized aluminum, 0.032 inch minimum thickness.
5. Multilayer, multicolor, plastic for mechanical engraving, 1/8 inch minimum thickness.

C. Label text shall contrast with label background and be easily readable from 24 inches distance.

D. Factory attached label securely on equipment in a prominent location.

2.07 VACUUM EQUIPMENT GENERAL

A. Provide vacuum equipment systems and components indicated. Where components are not otherwise indicated, provide manufacturer's standard components as required for a complete system.

B. Fasteners and Anchors: Furnish required fasteners and anchorage devices for installing fume extraction and vacuum equipment, and furnish other components of work where installation of devices is specified in another Section.

1. Concrete Floor Anchors: Galvanized-steel, post-installed expansion anchors, except provide stainless steel anchors in locations receiving water spray. Provide number per unit recommended by manufacturer unless additional anchors are required for conditions indicated.

2. Wall Anchors: Corrosion resistant, except provide stainless steel in locations receiving water spray; suitable for securing fume extraction and vacuum equipment to adjacent wall. Provide number per unit recommended by manufacturer unless additional anchors are required for conditions indicated.

2.08 ROOFTOP CYCLONE UNIT, 4 STATIONS

A. Basis of Design Product: Subject to compliance with requirements, provide products by Roberson Air System, Inc. (Dana Point, CA; 714-420-1450) as specified or approved equal products by one of the following:

1. Roberson Air System Inc. (Dana Point, CA; 714-420-1450).
2. Ross and White (Cary, IL; 847-516-3900).
3. Eurovac (Valley City, OH; 800-265-3878).
4. Or approved equal

B. Major components: Each rooftop cyclone unit shall consist of, but not necessarily limited to, the following major components:

1. Discharge Blower
2. Automatic Festooned Hose Assembly
3. Pre-Separator
4. Filter Unit
5. Dumpster and Lid
6. Festoon Pneumatic Retraction Source
7. Outlet Silencer
8. Vacuum Tubing and Fittings
9. Couplings
10. Support Structure
11. Electrical Control Cabinet
12. Pneumatic Control Cabinet
13. Controls

C. Features and Construction.

1. Discharge Blower: 1,700 CFM at 84 inches water column, 50 hp minimum high pressure blower with vertical-shaft, aluminum wheel, Class B spark resistant wheel. The volume of air shall be cable of operating four vacuum stations simultaneously. The blowers are to be flanged mounted to the top of each cyclone. Provide explosion proof motor with class B spark resistant wheel.

2. Automatic Festooned Hose Assembly: Minimum 40-foot long, smooth interior hose with 2 inch inside diameter rated for a minimum negative pressure of 7 inches of mercury. A vertically moving rotating hose pulley, connected to a synthetic cord, shall lift the hose into a fully retracted festooned position. The festooned hose shall pass through the rotating hose pulley as it moves vertically up and down and as the hose retracts back and feeds out respectively. The hose pulley vertical movement shall be powered pneumatically and linearly with pneumatic automatic festooned technology. The festoon movement shall operate without unwanted pull back in the feed out position or unwanted feed out in the stop position. Also, a motorized gear driven movement, such as a

winch, will not be acceptable because it does not provide the user friendly freedom of movement needed to effectively and efficiently manage the hose. Overhead cable pulleys shall guide the synthetic cord from the hose pulley to the pneumatic retraction source. The push buttons on a battery powered lance mounted RF remote control transmitter shall automatically control the festooned hose “feed’ and “retract” and vacuum blower “Start” and “Stop” functions. The battery powered RF transmitter housing will be heavy duty plastic and will not need an explosion proof or intrinsically electrical ratting.

3. Pre-Separator: The high efficient cyclone pre-separator shall be constructed of 12 gauge metal, designed to collect 100% of the trash, and 99.98% of the dust 30 microns and larger vacuumed by the system. Provide a cone flange in the assembly for inner cyclone maintenance. Each 3” hose vacuuming station shall be connected to one properly sized cyclone and top flange mounted blower. At each facility, the cyclone/blower assemblies shall be mounted on one structure over one 3 cubic yard trash container. The blower discharge shall be directed out of the building.

4. Filter Unit: The secondary filtration shall use appropriately sized pleated polyester cartridge filters. The cartridge filter service life shall be a minimum of 9 months. Sock type filters are not acceptable. The filter shall have a total filter area of 365 square feet. The filter efficiency will 99.89 DIN 24184/3, allowing the air to be exhausted to the surrounding work area. The filter shall be capable of automatic self-cleaning by a compressed air, reverse pulse method. Duration and frequency of the cleaning pulses shall be adjustable.

5. Dumpster and Lid: Provide a 3-cubic yard dumpster compatible with the owners refuse service, for collection of the refuse from the cyclone assembly. Provide an airtight lid with closure latches for the dumpster. Connect the lid to the bottom of the cyclone assembly with a section of flexible hose to allow the dumpster to be removed for emptying. The lid shall be supported from the cyclone by a lifting mechanism to allow the dumpster to be rolled away from the system

6. Festoon Pneumatic Retraction Source: Shall pneumatically fully retract the festooned hose and hose pulley to the overhead cable pulley when the hose is fully extended inside the bus in approximately 10 seconds. The hose shall have a gentle pneumatic pull when retracting. The gear driven force of a motor or winch type retraction mechanism will not be acceptable. Valves or approved equal shall provide automatic “feed” “stop” and ”retract” control of the festooned hose.

7. Outlet Silencer: Continuously-welded, hot-rolled steel outer casing with a fiberglass acoustical media protected by a fiberglass cloth and perforated galvanized steel liner. Mount silencer to blower outlet.

8. Vacuum Tubing and Fittings: Zinc-coated, carbon steel vacuum tubing, and fittings. All bends shall be long radius type to prevent clogging.

9. Couplings: The duct and fittings shall be connected with Nordfab quick-fit clamps or with flanges with vane stoned formed ends.

10. Electrical Control Cabinet: NEMA 12 cabinet, containing all required components including combination full-voltage, magnetic motor starter/disconnect with motor overload protection, relays timers, and terminal blocks. Fan “Start/Stop” switches and pilot light shall be mounted on the right flange. Cabinet shall be constructed in accordance with all national and local codes. The cabinet shall be mounted to the cyclone support structure.

11. Pneumatic Control Cabinet: NEMA 12 cabinet containing a filter, regulators, and valves shall be mounted in a strategic location to provide the needed vacuum system controls.

12. Controls: The blower can be started by pressing the electric panel “Start” push button. Pressing the fuel island "feed" push button allows the hose to feed out indefinitely and opens the related (front or rear door) vacuum slide gate. Pressing the fuel island mounted “retract” push button will bring the hose to the fully retracted position. Pressing the electric panel "Stop" button will turn off the blower.

13. Finish: All exposed metal parts shall be galvanized or cleaned and painted with two coats of primer followed by two coats of semi-gloss industrial enamel paint. Color to match existing or approved equal. Provide one quart of touch-up paint.

PART 3 – EXECUTION

3.01 EXAMINATION

A. Examine and test operation of existing rooftop cyclone units with installer present.

B. Verify that existing equipment utilities have been disconnected and capped before starting detachment and disassembly operations.

C. Survey of existing conditions: Record existing conditions by use of preconstruction photographs or video.

1. Inventory and record the condition of equipment to be removed and reinstalled. Provide photographs or video of conditions that might be misconstrued as damage caused by relocation operations.

3.02 RELOCATION

A. Detach equipment items from existing construction, in a manner to prevent damage,

prepare for reuse.

B. Disassemble equipment items as required. Use gentle methods and appropriate equipment to prevent damage to the item and surfaces.

C. Temporarily store items in a secure area until commencement of reinstallation operations, if required.

3.04 PREPARATION

A. Vacuum and clean finished floor and existing condition which rooftop cyclone unit shall be updated.

3.03 INSTALLATION

A. Install rooftop cyclone units according to manufacturer's written instructions and, if applicable, approved shop drawings. Unless indicated otherwise install equipment level, plumb, square, rigid, and true. Install free of dents or distortion. Make connections to form a rigid structure, free of buckling and warping.

1. Reassemble updated equipment items noted in specs and drawings. Use gentle methods and appropriated equipment to prevent damage to existing equipment and building components.

2. Re-build and modify pneumatic panels. Provide proper existing and new compartment protection as required.

3. Install braces, straps, plates, brackets, and other reinforcements as needed to support equipment loading and as required for stability.

4. Anchor equipment indicated to be permanently fixed in place using fasteners of type recommended by equipment manufacturer.

5. Connect equipment to utilities specified.

6. Seismic Restraints: Install seismic-restraint devices using methods approved by preapproved ratings submittal, independent testing submittal, or delegated design submittal provided for each fume extraction and vacuum equipment type.

B. Install equipment with access and maintenance clearances that comply with manufacturer's written installation instructions and with requirements of authorities having jurisdiction.

3.04 ADJUSTING

A. Adjust vacuum equipment so that connectors and other components engage accurately and securely.

B. Adjust and lubricate operable components to operate smoothly and easily, without binding or warping. Check and readjust operating hardware.

3.05 FIELD QUALITY CONTROL

A. Perform the following tests and inspections with the assistance of a factory-authorized service representative:

1. Perform visual and utilities (electrical, plumbing, and compressed air as applicable) inspection and testing for each vacuum equipment unit according to manufacturers' written recommendations. Certify compliance with each manufacturer's equipment-performance parameters.
2. Leak Test: After installation, test for fume leaks. Repair leaks and retest until no leaks exist.
3. Operational Test: After installation, start units to confirm proper operation.
4. Test and adjust controls and safeties. Replace damaged and malfunctioning controls and components.
5. See Section 01 43 00 "Quality Assurance" for retesting and reinspecting requirements.

B. Vacuum equipment unit will be considered defective if it does not pass tests and inspections.

C. Prepare test and inspection reports.

3.06 CLEANING AND PROTECTION

A. Clean finished surfaces and make ready for use. Remove residual oil, grease, solvents, and other contaminants using methods and products that will not damage equipment surfaces.

B. Touch up marred finishes or replace vacuum equipment that cannot be restored to factory-finished appearance. Use only materials and procedures recommended or furnished by fume extraction or vacuum equipment manufacturer.

C. Replace vacuum equipment components that have been damaged beyond successful repair by finish touchup or similar minor repair procedures.

D. Protect installed products from damage during remainder of the construction period.

3.07 DEMONSTRATION AND TRAINING .

A. Engage a factory-authorized service representative to demonstrate operation of vacuum equipment to Owner's designated personnel.

B. Engage a factory-authorized service representative to train Owner's maintenance personnel to adjust, operate, and maintain the following vacuum equipment:

1. Rooftop cyclone Units, 4 stations: 4 hours minimum.

END OF SECTION 11 11 33

SECTION 23 00 00

GENERAL HVAC REQUIREMENTS

PART 1 - GENERAL

1.01 SCOPE OF WORK

A. It is intended for the Division 23 scope of work to include complete and functional mechanical systems - including all required materials, labor, equipment, and services necessary to achieve the desired final product. It is further intended for the Division 23 scope of work to include coordination with Divisions 21 and 22 and all work required by Division 23 for complete Fire Protection and Plumbing systems.

1.02 REFERENCES

A. Division 01 of these specifications shall govern Division 23 work, including Bidding Requirements, Conditions of the Contract, and Supplementary Conditions. It is the Division 23 Contractor's responsibility to be aware of all information and requirements included in these locations, and to include those requirements as part of the Division 23 scope of work.

B. It shall be understood by the Division 23 Contractor that the Division 23 scope of work is intended to involve a coordinated effort with all other Divisions of work. Refer to other sections of the documents for additional related requirements and to ensure a coordinated effort.

C. References to industry standards, testing procedures, etc. are noted in individual sections of these specifications. The requirements and standards from the referenced documents shall be considered part of the requirements of these specifications.

D. This section applies to all Division 23 work. The Division 23 Contractor shall ensure that all Division 23 work described throughout other specification sections and on the drawings is in accordance with this section.

E. It shall be understood by the Contractor that the Division 23 information is intended to serve as a single document, and each section of these specifications directly or indirectly relates to all other sections. As such, each section does not attempt to identify every other Division 23 section that is related. Significant references to information outside of Division 23 are, however, occasionally provided for informational purposes. This information is provided to assist in coordination, but the lack of a reference to another portion of the Contract Documents does not relieve the Contractor of the responsibility for coordination with other sections of Divisions 23 and all other trades.

1.03 DEFINITIONS

A. The following definitions shall apply to the use of these words when used in Division 23. These definitions are not intended to define use of these words outside of Division 23.

B. Acceptance: The Owner's assumption of ownership of the mechanical system.

C. Concealed, Exterior Installations: Concealed from view and protected from weather conditions and physical contact by building occupants but subject to outdoor ambient temperatures. Examples include installations within unheated shelters.

D. Concealed, Interior Installations: Concealed from view and protected from physical contact by building occupants. Examples include above ceilings and in duct shafts.

E. Contractor (The Contractor, This Contractor, Division 23 Contractor, etc.): The contractor responsible for the Division 23 scope of work.

F. Date of Acceptance: The official date when Acceptance occurs. This will coincide with the granting of Substantial Completion unless noted otherwise by the Owner's Representative. It shall not be assumed that the Date of Acceptance has deviated from Substantial Completion unless written documentation is provided by the Owner's Representative indicating differently.

G. Exposed, Exterior Installations: Exposed to view outdoors or subject to outdoor ambient temperatures and weather conditions. Examples include rooftop locations.

H. Exposed, Interior Installations: Exposed to view indoors. Examples include finished occupied spaces and mechanical equipment rooms.

I. Finished Spaces: Spaces other than mechanical and electrical equipment rooms, furred spaces, pipe and duct shafts, unheated spaces immediately below roof, spaces above ceilings, unexcavated spaces, crawlspaces, and tunnels.

J. Mechanical: Shall be considered interchangeable with "Division 23".

K. Owner's Representative: The Architect or his designated representative, as outlined in the General Conditions.

L. Provide: Furnish and install.

1.04 ABBREVIATIONS

A. The following are industry abbreviations used in these specifications: ABS: Acrylonitrile-butadiene-styrene plastic; ASJ: All-service jacket; BR: Butyl rubber; Buna-N: Nitrile rubber; CPVC: Chlorinated polyvinyl chloride plastic; CR: Chlorosulfonated polyethylene synthetic rubber; CSM: Chlorosulfonyl-polyethylene rubber; CWP: Cold working pressure; DDC: Direct digital control; DOP: Dioctyl phthalate or bis-(2-ethylhexyl) phthalate; EMCS: Energy Management and Control System; EPDM: Ethylene-propylene-diene terpolymer rubber; FOG: Fats, oils, and greases; FRP: Fiberglass-reinforced plastic; FSK: Foil, scrim, kraft paper; FSP: Foil, scrim, polyethylene; HDPE: High-density polyethylene plastic; HEPA: High-efficiency particulate air; I/O: Input/output; LLDPE: Linear, low-density polyethylene plastic; MS/TP: Master slave/token passing; MSS: Manufacturers Standardization Society for The Valve and Fittings Industry Inc; NBR: Acrylonitrile-butadiene rubber; NC: Noise criteria; NR: Natural rubber; NUSIG: National Uniform Seismic Installation Guidelines; PE: Polyethylene plastic; PEX: Crosslinked polyethylene plastic; PC: Personal computer; PID: Proportional plus integral plus derivative; PMMA: Polymethyl methacrylate (acrylic) plastic; PP: Polypropylene plastic; PTFE: Polytetrafluoroethylene plastic; PUR: Polyurethane plastic; PVC: Polyvinyl chloride plastic; PVDC: Polyvinylidene chloride; RC: Room criteria; RTD: Resistance temperature detector; SSL: Self-sealing lap; SWP: Steam working pressure; TFE: Tetrafluoroethylene plastic; TPE: Thermoplastic elastomer; ULPA: Ultra low penetration air.

1.05 APPLICABLE CODES

A. Division 23 work shall be performed in accordance with applicable codes and standards as adopted by the authorities having jurisdiction including amendments. Following is a listing of major codes and standards, the requirements of which shall be considered part of the scope of this project. This list should not be considered comprehensive, and codes or standards not included in this list should not be considered to be excluded from the scope of the project.

1. Americans with Disabilities Act ADA)

2. Applicable State and Local Codes and Ordinances

3. California Electrical Code

4. California Building Code

5. California Fire Code

6. California Mechanical Code

7. California Plumbing Code

1.06 PERMITS AND FEES

A. All permits and inspections required to complete the Division 23 scope of work shall be included in the Division 23 bid price. All certifications provided as part of the permit and inspection process shall be provided to the Owner as part of the Division 23 scope of work as specified in these documents.

B. All fees required by utility providers shall be included in the Division 23 bid price, including water, gas, sanitary sewer, and storm sewer connections. This shall include all charges to the project by these agencies, including but not limited to general fees, equipment charges (meters, vaults, etc.), tap fees, and utility main installation charges.

1.07 ALTERNATES (REFER TO DIVISION 01)

A. The bid price for the scope of work shall be separated into base bid and alternate values when indicated. Both base bid and alternate bid prices shall reflect a complete and working mechanical system, with specific features and/or portions of the systems designated as base bid or alternate as described.

1.08 SCOPE AND APPROPRIATE USE OF BID DOCUMENTS

A. These specifications and accompanying drawings are intended to communicate the design concept for this project and outline the scope of work. They should not be viewed as a comprehensive document that details every specific task, item, or piece of equipment required to complete the project. It is understood that industry knowledge and experience is required to establish an accurate and complete scope of work from these documents, and it is assumed that the Division 23 Contractor possesses that knowledge and experience. Work not specifically noted in these specifications or the accompanying drawings, but which is required to complete the project, shall be included by the Division 23 Contractor as part of his scope of work.

B. These specifications and the accompanying drawings are intended to supplement each other. Information included in either one shall be incorporated into the project as if included in both. In the event of any conflicts, the most stringent requirements shall be considered the governing scope of work until and unless clarification can be obtained by the Contractor.

C. In the event of dimensional discrepancies between Division 23 documents and other disciplines, Architectural and Structural documents take precedence over Division 23. Refer to this information for sufficient understanding to the extent that it impacts the Division 23 scope of work.

D. Drawings are intended to indicate the general arrangement of piping, ductwork, equipment, and other components of Division 23 systems. They shall be followed as closely as possible but shall be considered diagrammatic in nature. They are not intended to show every component, fitting, offset, etc. Components, fittings, offsets, etc. as required to meet the intent of the documents and to achieve coordination with other trades shall be included in the Division 23 scope of work. Note that more detailed information about routing may be provided for certain areas of the project where special constraints exist. It is the intent of this detailed information to better communicate the constraints, but these drawings and details shall still be considered diagrammatic in nature as outlined above.

1.09 ROUTING AND LOCATIONS

A. It is the Contractor's responsibility to coordinate equipment locations and system routing with available space and with all other trades.

B. It is the Contractor's responsibility to coordinate and verify the exact locations and routing of equipment and systems prior to fabrication and installation. If discrepancies become apparent as part of the verification process, the Contractor shall ask for written clarification/direction. Alteration, removal and/or replacement of work already installed as a result of failure to verify and/or coordinate locations and routing prior to fabrication and/or installation shall be at the Contractor's expense.

C. Locations of equipment shown on the drawings are approximate unless specifically dimensioned.

D. All ductwork, piping, tubing, conduit, etc. shall be concealed within building construction unless noted otherwise. Mechanical rooms are considered to be within building construction for the purposes of this requirement.

E. Existing utilities, piping, and ductwork have been indicated as closely as possible. The Contractor can assume that points of connection to existing utilities have been shown within 10 feet of the actual location. When actual points of connection are more than 10 feet from the location shown on the drawings, the Contractor shall notify the Owner's Representative prior to commencing this portion of the work.

F. The Contractor is responsible for any remedial work required from failure to locate and preserve underground utilities. This shall include all work necessary to repair any damaged utilities to their original condition.

1.10 SCHEDULING

A. It is understood that while drawings are to be followed as closely as circumstances permit, the Contractor shall be responsible for installation of systems according to the true intent and meaning of Contract Documents. Anything not clear or in conflict will be explained by making application to Owner's Representative. The Contractor shall familiarize himself with his scope of work as well as the required coordination with other trades and the scheduling of other trades sufficiently to address coordination issues in a timely manner such that they do not result in remedial work for other trades.

B. Should conditions arise where certain changes would be advisable, secure approval from Owner's Representative for those changes before proceeding with work. Proceeding without written approval is at the Contractor's risk and at the Contractor's expense.

C. The contractor shall coordinate with the work of various trades when installing interrelated work. Before installation of mechanical items, proper provisions shall be made to avoid interferences. Changes required in work specified in Division 23 caused by neglect to do so shall be made at no cost to Owner.

D. Inserts and supports required by Division 23 shall be furnished and installed unless otherwise noted. Furnish sleeves, inserts, supports, and equipment that are an integral part of other Divisions of the Work to those involved in sufficient time to be built into construction as the Work proceeds. Locate these items and see that they are properly installed. Expense resulting from improper location or installation of items above shall be borne under Division 23.

1.11 CUTTING AND PATCHING

A. The Division 23 Contractor shall be responsible for all cutting and patching required to complete the Division 23 scope of work.

B. All patching shall be performed such that it matches existing finishes.

C. The Contractor shall not cut any structural members without first getting approval from the Owner's Representative to do so.

D. All cutting and patching required to correct defective or otherwise unacceptable work shall be the responsibility of the Division 23 Contractor.

1.12 GUARANTEE (REFER TO DIVISION 01)

A. All Division 23 systems and equipment shall be guaranteed for a minimum period of one year.

B. Provide 1 year supply of extra filters for all HVAC equipment.

C. Specific equipment and/or systems requiring warranties beyond one year are indicated in the table at the end of this section.

D. The guarantee shall begin at the Date of Acceptance unless written documentation is provided noting otherwise. When more than one Date of Acceptance is indicated for various portions or specific equipment, the guarantee shall begin at the Date of Acceptance independently for each portion of the system or piece of equipment.

E. Permission to use Division 23 systems or equipment for temporary heating or other contractor use prior to the Date of Acceptance, as outlined elsewhere in these specifications, shall not constitute the beginning of the guarantee period. The contractor shall make any necessary arrangements to extend equipment and/or system warranties sufficient to maintain the designated guarantee period from the Date of Acceptance.

1. Exception: When temporary heating and or other system use is requested by the Owner for the Owner's benefit prior to the Date of Acceptance, the guarantee period for the portions of the system or specific equipment requested for use may begin at the time it is put into service. This can only be assumed to have occurred if written documentation is provided indicating such.

1.13 QUALITY ASSURANCE

A. Material and Equipment Qualifications

1. Provide materials and equipment that are standard products of manufacturers regularly engaged in the manufacture of such products, which are of a similar material, design and workmanship. Standard products shall have been in satisfactory commercial or industrial use for 2 years prior to bid opening. The 2-year use shall include applications of equipment and materials under similar circumstances and of similar size. The product shall have been for sale on the commercial market through advertisements, manufacturers' catalogs, or brochures during the 2 year period.

2. Alternative Qualifications: Products having less than a two-year field service record will be acceptable if a certified record of satisfactory field operation for not less than 6000 hours, exclusive of the manufacturer's factory or laboratory tests, can be shown.

B. Service Support: The equipment items shall be supported by service organizations. When requested to gain approval, submit a certified list of qualified permanent service organizations for support of the equipment which includes their addresses and qualifications. These service organizations shall be reasonably convenient to the equipment installation and able to render satisfactory service to the equipment on a regular and emergency basis during the warranty period of the contract.

C. Manufacturer's Nameplate: Each item of equipment shall have a nameplate bearing the manufacturer's name, address, model number, and serial number securely affixed in a conspicuous place; the nameplate of the distributing agent will not be acceptable.

D. UL Listings: All equipment shall be provided with a UL or approved equivalent label when labeling is available for that type of equipment.

E. Fuel-fired equipment shall be labeled by the appropriate nationally recognized label for the fuel type (i.e. AGA).

F. All control panels shall be UL listed (or equivalent approved label).

G. Pressure vessels shall be provided in accordance with applicable pressure vessel ordinances.

H. All mechanical equipment shall have an AIC rating of 100,000 or otherwise specified on electrical one-line diagrams fault current for each piece of equipment.

1.14 SUBSTITUTIONS (REFER TO DIVISION 01)

A. When multiple manufacturers are listed in these specifications, equipment can be used from those manufacturers providing they can meet the requirements of the specifications and drawings. This shall include meeting capacity requirements, efficiencies, space and weight limitations, electrical provisions, etc. The detailed information in the specifications, scheduled equipment information, additional drawing information and any specific references to a particular manufacturer and/or model of equipment shall be considered the basis of design. Other listed manufacturers, even when listed in these specifications, will only be allowed if they meet or exceed that basis of design.

B. Substitutions involving manufacturers not listed in these specifications will not be allowed without written approval. When written approval is requested, information will be reviewed in preliminary fashion for general conformance only. Any approved manufacturers will still be required to meet the requirements of these specifications and the drawings, and final approval during submittal review will only be granted if the equipment meets or exceeds the requirements of the documents.

C. It is the Contractor's responsibility when utilizing approved substituted equipment to ensure the equipment will fit within the constraints of the project as detailed using the basis of design equipment (space, weight, power, etc.). Any required alterations by Division 23 or any other Division of work to accommodate differences between the substituted equipment and the basis of design equipment shall be the responsibility of the Division 23 Contractor, including the cost of design for the required changes.

D. If the changes required by substituted equipment cannot be accommodated, the Contractor shall be responsible for replacing the substituted equipment with the basis of design equipment.

E. Proposed substituted equipment will not be considered equal if it requires an increase of more than 5% in power usage at design conditions.

1.15 MECHANICAL COST BREAKDOWN (REFER TO DIVISION 01)

A. Provide a breakdown of construction costs within 30 days of Notice to Proceed, with separate costs for each of the items listed in the table at the end of this section.

1.16 PAYMENT REQUESTS

A. Submittals and operation and maintenance data must be received and approved before payment requests will be considered for materials and equipment.

B. EMCS submittals must be received before payment requests will be reviewed for this portion of the work. Only payment requests for programming and submittals will be reviewed until submittals are approved.

C. Fire sprinkler system submittals, including code-approved shop drawings, must be received before payment requests will be reviewed for this portion of the work. Only payment requests for design and submittals will be reviewed until submittals are approved.

1.17 TEMPORARY HEATING (REFER TO DIVISION 01)

A. Temporary heating shall not be provided by the permanent mechanical system.

1. Exception: The Owner's Representative may choose to allow the Contractor to use the permanent mechanical system. In such cases, the Contractor shall obtain written authorization from the Owner's Representative. In no case shall the permanent system be used until and unless this written authorization is granted.

B. If allowed to use the permanent systems for temporary heating, the following constraints shall apply:

1. The contractor shall be responsible for providing a clean system at substantial completion, to include pressure cleaning of coils and vacuum cleaning of ductwork if required to negate the effects of use during construction.

2. Granting the use of equipment and systems for temporary heat will not constitute Acceptance of equipment and will not start the warranty or guarantee period for the Owner.

3. System guarantee and equipment warranties shall be extended to maintain the guarantee and warranty periods from the Date of Acceptance. Any costs associated with extension of warranties shall be at the Contractor's expense.

4. Filters shall be installed meeting the requirements of these documents. When multiple stages of filtration are provided on a system, filters meeting the requirements of the first stage of filtration shall be provided and maintained during use. A minimum of MERV 13 filtration filters shall be used during this time, even if this requirement is more stringent than the requirements for permanent filtration. New filters shall be provided prior to system balancing.

5. Filter fabric shall be provided at all return grilles and shall be replaced as appropriate to maintain a clean system.

1.18 TEMPORARY HEATING, COOLING AND HUMIDITY CONTROL

A. Provide temporary heating, cooling, controls, humidification and dehumidification as required to facilitate the construction of the project. Size and select temporary system based on the requirements of the various trades during construction. This includes, but is not limited to, drywall, case work, wood flooring and wood finishes that are subject to warping. Size and install system to prevent mold growth. Coordinate the location of the temporary system. Submit this procedure to the Mechanical Engineer for review. Coordinate and provide any temporary power, controls, ductwork, piping, plumbing anchorage, miscellaneous steel and structural supports required to support the temporary system. Installation of the system to comply with all applicable codes and be acceptable to the Authority Having Jurisdiction (AHJ).

1.19 SUBMITTALS (REFER TO DIVISION 01)

A. Submittal information shall be provided and approved on all materials and equipment prior to ordering.

B. Provide indication of which options and accessories are to be included.

C. Include all scheduled information for equipment listed in schedules on the drawings.

D. Review will be for general conformance only and shall not relieve the Contractor for any deviations from the requirements of the documents unless clear written reference is made by the Contractor in the submittal to proposed deviations.

E. All Division 23 information shall be provided in one complete submittal, indexed by specification section.

1. Exceptions: Fire protection and EMCS submittals can be provided separately. At the discretion of the Owner's Representative, partial submittals may be provided. If allowed, provide a table indicating submittal status with each submittal, and provide an initial submittal with all required tabs and space for all current and future submittals.

F. Provide operation and maintenance data for individual equipment after initial submittals have been reviewed.

G. Efficiency Standards

1. Units requiring more than a 5% increase in power input beyond the scheduled equipment to meet design capacities will not be considered equal.

2. Units requiring more than a 15% increase in fan brake horsepower over the scheduled equipment to meet the design flow and external static pressure requirements will not be considered equal and will not be accepted.

1.20 DELIVERY, STORAGE, AND HANDLING

A. Follow manufacturer's directions in delivery, storage, protection, and installation of equipment and materials.

B. Promptly notify Owner's Representative in writing of conflicts between requirements of Contract Documents and Manufacturer's directions and obtain written instructions from Owner's Representative before proceeding with work. The Contractor shall bear expenses arising from correcting deficiencies of work that do not comply with manufacturer's directions or such written instructions from Owner's Representative.

C. Handle, store, and protect equipment and materials to prevent damage before and during installation in accordance with the manufacturer's recommendations, and as approved by the Contracting Officer. Replace damaged or defective items.

D. Store ductwork in a clean, dry location. If the location of storage cannot be protected from moisture, keep ductwork above grade level to protect from standing water.

1.21 OPERATION AND MAINTENANCE MANUALS

A. Operation and Maintenance Manuals shall be provided in three post binders capable of having materials added or removed. Standard clasp-type binders are not acceptable. Binders with overlapping, telescoping posts shall be used.

B. Provide a title page at the beginning of the manual with the project title, date, Architect, Engineer, and Contractor. Also provide a master index. The title page and index shall be provided at the beginning of each volume when multiple volumes are required.

C. Organize the manual into five divisions: Contacts, Equipment, Maintenance Schedule and Extra Materials, Energy Management and Controls System, Warranties and Certifications.

1. Contacts division: Division shall consist of name, address, and phone number of the following parties: Architect, Mechanical Engineer, Electrical Engineer, General Contractor, Mechanical Contractor, Plumbing Contractor, Sheet Metal Contractor, EMCS Contractor, Electrical Contractor and major equipment suppliers.

2. Equipment division: Provide a separate section for each section of the specifications. Each section shall include, at a minimum, the following for each item of Division 23 equipment.

a. Performance curves or tables showing the specified operating points and the operating points after final testing and balancing

b. Manufacturer's maintenance instructions: Instructions shall include name of vendor, installation instructions, parts numbers and lists, operating instructions for equipment, maintenance, and lubrication instructions, troubleshooting guides, and overhaul specifications for major equipment.

c. Wiring diagrams

d. Step-by-step procedures for putting each piece of mechanical equipment into operation

e. Refer to individual specification sections for additional information required to be incorporated into the Operation and Maintenance Manual.

3. Maintenance Summary and Extra Materials division: Division shall include two sections.

a. The first section shall consist of a preventative maintenance schedule summary table (or list). The table shall be organized by specification section and include equipment name and designation as it appears on the equipment schedule, equipment location, and type and frequency of preventative maintenance requirements (including lubrication).

b. The second section shall consist of a list of extra materials furnished under this contract. The list shall be organized by specification section and include equipment name and designation as it appears on the equipment schedule, extra material(s) furnished, and verification by an owner's representative that material(s) have been provided. List shall be similar to that included at the end of this section.

4. Warranties and Certificates division: Division shall include

a. Test and balance reports

b. Test records of piping, tanks, ductwork, etc

c. Signed checklist of Instruction Period

d. Certificate from Health Department indicating acceptance of domestic water quality

e. Copies of specific product Warranties

f. Copies of certified factory start-up reports

g. Valve tag identification schedules

h. Fire sprinkler system certification

D. Prior to binding, submit one copy of Operation and Maintenance Manual to Owner's Representative for review. After this review and final approval of the manuals, prepare two (2) copies of approved manuals for use during the instruction period. Following instruction period, turn over both copies to the Owner.

E. Manuals may be compiled in multiple volumes if necessary for ease of use.

1.22 CERTIFIED FACTORY START-UP

A. Refer to individual sections of these specifications for specific requirements.

B. Start-up shall be performed by a certified factory representative. Prior to start-up, certification of factory representative shall be forwarded to the Engineer for review.

C. Schedule start-up with the Owner. Perform operation and maintenance training at the time of start-up for equipment requiring certified factory start-up.

1.23 OPERATION AND MAINTENANCE TRAINING

A. General

1. Provide two training sessions for the Owner. The first training session shall occur prior to substantial completion. The second training session shall occur prior to completion of the warranty period. The content below is required for the first training session. The content for the second training session shall be as requested by the Owner, up to an including all information included in the first training session.

2. Operation and maintenance of mechanical systems utilizing Operation and Maintenance Manual. During the training session, each piece of equipment shall be located, and all information included in the O&M manuals shall be demonstrated to the satisfaction of the Owner's Representative.

3. Individuals present shall include the mechanical contractors, subcontractors and equipment factory representatives as appropriate. Certified factory representatives shall be present for all equipment requiring certified factory start-up.

4. Provide a video tape of the training sessions conducted and furnish copies of the tape to the Owner. Video tapes shall be of sufficient quality to allow training of future employees or refresher training of personnel. Turn over to the Owner in DVD format.

5. The two training sessions shall each occur in one consolidated session for all mechanical equipment.

   a. Exceptions:

      1) Training for equipment requiring certified factory start-up shall be conducted at the time of start-up.

      2) Multiple sessions shall be scheduled as required to maintain a maximum allowable duration of any single session of four hours.

      3) When separate training sessions are warranted to achieve proper training on all equipment and systems, as determined by the owner's representative, multiple sessions shall be scheduled as required.

4) Training session shall include all equipment included in the table at the end of this section. A table similar to this one shall be used to verify owner training has been completed on all equipment and shall be included in the Operation and Maintenance Manual.

6. Extra Materials

a. A list of extra materials to be provided under this contract has been included at the end of this section. Refer to individual specification sections for specific requirements of extra materials to be furnished under this contract.

b. Turn extra materials over to Owner.

1) Provide summarized list of extra materials that have been furnished. List shall include verification by Owner's Representative that parts have been furnished. Incorporate into O&M Manual. Extra materials list shall be similar to that provided at the end of this section.

7. Cleaning

a. Leave all equipment and systems in a clean and new condition at the completion of the project. Clean all piping and ductwork exposed in finished spaces. Remove all stickers from equipment in finished spaces (plumbing fixtures, etc.). Repair all scratched and damaged equipment to new condition, to include touch-up painting.

8. Record Drawings

a. Maintain a set of Contract Documents dedicated for record drawings. These documents shall incorporate all clarifications and changes provided by the Owner's Representative, as well as field changes made by the Contractor. All markings shall be neat and legible. Turn over documents to the Owner's Representative at the completion of the project.

9. Punch Lists

a. Notify the Owner's Representative in writing when the project is ready for punch lists.

b. When all punch list items have been addressed, notify the Owner's Representative in writing that the project is ready for a backcheck of completed punch list items. Include a copy of the original punch list with each completed item initialed and any required notation indicating if something was not completed and why.

c. If, at the time of the backcheck, items are found that continue to be in nonconformance with the project documents, these items will be forwarded to the Contractor. Completion of these items shall be required to achieve substantial completion. All site visits required beyond the initial punch list and initial back check visits, including visits required to verify completion of these remaining outstanding items, shall be charged to the Contractor at normal billing rates.

10. Visiting the Project Site

a. The premises shall be examined and conditions shall be understood which may affect performance of work of this Division before submitting proposals for this work.

b. No subsequent allowance for time or money will be considered for any consequence related to failure to examine existing site conditions.

PART 2 - Products (Not Used)

PART 3 - Execution (Not Used)

PART 4 - Tables (NOT USED)

END OF SECTION

SECTION 23 01 30.52

EXISTING HVAC AIR DISTRIBUTION SYSTEM CLEANING

PART 1 - GENERAL

1.1 RELATED DOCUMENTS

A. Drawings and general provisions of the Contract, including General and Supplementary Conditions and Division 01 Specification Sections, apply to this Section.

1.2 SUMMARY

A. Section includes cleaning existing HVAC air-distribution equipment, ducts, plenums, and system components.

B. Related Requirements:

1. Section 23 05 93.00 "Testing, Adjusting, Balancing for HVAC" for system flow documentation before cleaning and balancing and following cleaning and restoration.

1.3 INFORMATIONAL SUBMITTALS

A. Qualification Data:

1. For an ASCS.
2. For an IEP.
3. For a CMR and a CMRS.

B. Field Quality-Control Reports:

1. Project's existing conditions.
2. Evaluations and recommendations, including cleanliness verification.
3. Strategies and procedures plan.

PART 2 - PRODUCTS

2.1 HVAC CLEANING AGENTS

A. Description:

1. Formulated for each specific soiled coil condition that needs remedy.
2. Will not corrode or tarnish aluminum, copper, or other metals.

2.2 ANTIMICROBIAL SURFACE TREATMENT

A. Description: Specific product selected shall be as recommended by the IEP based on the specific antimicrobial needs of the specific Project conditions.

1. Formulated to kill and inhibit growth of microorganisms.
2. EPA-registered for use in HVAC systems and for the specific application in which it will be used.
3. Have no residual action after drying, with zero VOC off-gassing.
4. OSHA compliant.
5. Treatment shall dry clear to allow continued visual observation of the treated surface.

PART 3 - EXECUTION

3.1 PREPARATION

A. Inspect HVAC air-distribution equipment, ducts, plenums, and system components to determine appropriate methods, tools, and equipment required for performance of the Work.

B. Perform "Project Evaluation and Recommendation" according to NADCA ACR.

C. Cleaning Plan: Prepare a written plan for air-distribution system cleaning that includes strategies and step-by-step procedures. At a minimum, include the following:

1. Supervisor contact information.
2. Work schedule, including location, times, and impact on occupied areas.
3. Methods and materials planned for each HVAC component type.
4. Required support from other trades.
5. Equipment and material storage requirements.
6. Exhaust equipment setup locations.

D. Existing Conditions Report: Prepare a written report that documents existing conditions of the systems and equipment. Include documentation of existing conditions, including

inspection results, photo images, laboratory results, and interpretations of the laboratory results by an IEP.

1. Prepare written report listing conditions detrimental to performance of the Work.

E. Proceed with work only after conditions detrimental to performance of the Work have been corrected.

F. Use the existing service openings, as required for proper cleaning, at various points of the HVAC system for physical and mechanical entry and for inspection.

G. Comply with NADCA ACR, "Guidelines for Constructing Service Openings in HVAC Systems" Section.

H. Mark the position of manual volume dampers and air-directional mechanical devices inside the system prior to cleaning.

3.2 CLEANING

A. Comply with NADCA ACR, including items identified as "recommended," "advised," and "suggested."

B. Perform electrical lockout and tagout according to Owner's standards or authorities having jurisdiction.

C. Remove non-adhered substances and deposits from within the HVAC system.

D. Complete cleaning in accordance with Owner- Contractor agreed-upon scope of work.

E. Systems and Components to Be Cleaned: All air-moving and -distribution equipment.

1. Air devices for supply and return air.
2. Air-terminal units and connections.

    a. Flexible connectors.

3. Ductwork:

    a. Supply-air ducts, including turning vanes and reheat coils, to the air-handling unit.
    b. Return-air ducts to the air-handling unit.
    c. Exhaust-air ducts.

4. Casings.
5. Duct-mounted coils.
6. Air-Handling Units:

    a. Interior surfaces of the unit casing.

b. Coil surfaces compartment.
c. Condensate drain pans.
d. Fans, fan blades, and fan housings.

7. Exhaust fans and power ventilators.
8. Filters and filter housings.

F. Collect debris removed during cleaning. Ensure that debris is not dispersed outside the HVAC system during the cleaning process.

G. Particulate Collection:

1. For particulate collection equipment, include adequate filtration to contain debris removed. Locate equipment downwind and away from all air intakes and other points of entry into the building.
2. HEPA filtration with 99.97 percent collection efficiency for particles sized 0.3 micrometer or larger shall be used where the particulate collection equipment is exhausting inside the building,

H. Control odors and mist vapors during the cleaning and restoration process.

I. Mark the position of manual volume dampers and air-directional mechanical devices inside the system prior to cleaning. Restore them to their marked position on completion of cleaning.

J. System components shall be cleaned so that all HVAC system components are visibly clean. On completion, all components must be returned to those settings recorded just prior to cleaning operations.

K. Clean all air-distribution devices, registers, grilles, and diffusers.

L. Clean non-adhered substance deposits according to NADCA ACR and the following:

1. Clean air-handling units, airstream surfaces, components, condensate collectors, and drains.
2. Ensure that a suitable operative drainage system is in place prior to beginning wash-down procedures.
3. Clean evaporator coils, reheat coils, and other airstream components.

M. Air-Distribution Systems:

1. Create service openings in the HVAC system as necessary to accommodate cleaning.
2. Mechanically clean air-distribution systems specified to remove all visible contaminants, so that the systems are capable of passing the HVAC System Cleanliness Tests (see NADCA ACR).

N. Debris removed from the HVAC system shall be disposed of according to applicable Federal, state, and local requirements.

O. Mechanical Cleaning Methodology:

1. Source-Removal Cleaning Methods: The HVAC system shall be cleaned using source-removal mechanical cleaning methods designed to extract contaminants from within the HVAC system and to safely remove these contaminants from the facility. No cleaning method, or combination of methods, shall be used that could potentially damage components of the HVAC system or negatively alter the integrity of the system.

    a. Use continuously operating vacuum-collection devices to keep each section being cleaned under negative pressure.
    b. Cleaning methods that require mechanical agitation devices to dislodge debris that is adhered to interior surfaces of HVAC system components shall be equipped to safely remove these devices. Cleaning methods shall not damage the integrity of HVAC system components or damage porous surface materials, such as duct and plenum liners.

2. Cleaning Mineral-Fiber Insulation Components:

    a. Fibrous-glass thermal or acoustical insulation elements present in equipment or ductwork shall be thoroughly cleaned with HEPA vacuuming equipment while the HVAC system is under constant negative pressure and shall not be permitted to get wet according to NADCA ACR.
    b. Cleaning methods used shall not cause damage to fibrous-glass components and will render the system capable of passing the HVAC System Cleanliness Tests (see NADCA ACR).
    c. Fibrous materials that become wet shall be discarded and replaced.

3.3 CLEANLINESS VERIFICATION

A. Verify cleanliness according to NADCA ACR, "Verification of HVAC System Cleanliness" Section.

B. Verify HVAC system cleanliness after mechanical cleaning and before applying any treatment or introducing any treatment-related substance to the HVAC system, including biocidal agents and coatings.

C. Surface-Cleaning Verification: Perform visual inspection for cleanliness. If no contaminants are evident through visual inspection, the HVAC system shall be considered clean. If visible contaminants are evident through visual inspection, those portions of the system where contaminants are visible shall be re-cleaned and subjected to re-inspection for cleanliness.

D. Additional Verification:

1. Perform surface comparison testing or NADCA vacuum test.
2. Conduct NADCA vacuum gravimetric test analysis for nonporous surfaces.

E. Prepare a written cleanliness verification report. At a minimum, include the following:

1. Written documentation of the success of the cleaning.
2. Site inspection reports, initialed by supervisor, including notation on areas of inspection, as verified through visual inspection.
3. Surface comparison test results if required.
4. Gravimetric analysis (nonporous surfaces only).
5. System areas found to be damaged.

3.4 PROJECT CLOSEOUT

A. Post-Project Report:

1. Post-cleaning laboratory results if any.
2. Post-cleaning photo images.
3. Post-cleaning verification summary.

B. Drawings:

1. Deviations of existing system from Owner's record drawings.
2. Location of service openings.

END OF SECTION

SECTION 23 05 00

BASIC HVAC MATERIALS AND METHODS

PART 1 - GENERAL

1.01 Related Documents

A. Drawings and general provisions of the Contract, including General and Supplementary Conditions and Division 1 Specification Sections, apply to this Section.

B. Section 23 00 00 – General HVAC Requirements

1.02 Submittals

A. General

1. Product data for specified materials.

2. Welding certificates

1.03 Quality Assurance

A. Steel Support Welding: Qualify processes and operators according to AWS D1.1, "Structural Welding Code--Steel."

B. Steel Pipe Welding: Qualify processes and operators according to ASME Boiler and Pressure Vessel Code: Section IX, "Welding and Brazing Qualifications."

1. Comply with provisions in ASME B31 Series, "Code for Pressure Piping."

2. Certify that each welder has passed AWS qualification tests for welding processes involved and that certification is current.

C. Electrical Characteristics for Mechanical Equipment: Equipment of higher electrical characteristics may be furnished provided such proposed equipment is approved in writing and connecting electrical services, circuit breakers, and conduit sizes are appropriately modified. If minimum energy ratings or efficiencies are specified, equipment shall comply with requirements.

1.04 Delivery, Storage, And Handling

A. Deliver pipes and tubes with factory-applied end caps. Maintain end caps through shipping, storage, and handling to prevent pipe end damage and to prevent entrance of dirt, debris, and moisture.

B. Store plastic pipes protected from direct sunlight. Support to prevent sagging and bending.

1.05 Coordination

A. Arrange for pipe spaces, chases, slots, and openings in building structure during progress of construction, to allow for mechanical installations.

B. Coordinate installation of required supporting devices and set sleeves in poured-in-place concrete and other structural components as they are constructed.

C. Coordinate requirements for access panels and doors for mechanical items requiring access that are concealed behind finished surfaces. Access panels and doors shall be provided as required for Division 23 systems and equipment by Division 23.

PART 2 - PRODUCTS

2.01 Access Doors

A. Access doors shall be provided by Division 23 when serving Division 23 systems and equipment.

2.02 Dielectric Fittings

A. Description: Combination fitting of copper alloy and ferrous materials with threaded, solder-joint, plain, or weld-neck end connections that match piping system materials.

2.03 Escutcheons

A. Description: Chrome plated steel manufactured wall and ceiling escutcheons and floor plates, with an ID to closely fit around pipe, tube, and insulation of insulated piping and an OD that completely covers opening.

2.04 Housekeeping Pads

A. Housekeeping pads shall be provided by Division 23 when serving Division 23 systems and equipment.

2.05 Joining Materials

A. Refer to individual Division 23 piping Sections for special joining materials not listed below. Joining material requirements listed in individual Sections shall supersede the requirements in this section.

B. Pipe-Flange Gasket Materials: Suitable for chemical and thermal conditions of piping system contents.

1. ASME B16.21, nonmetallic, flat, asbestos-free, 1/8-inch maximum thickness unless thickness or specific material is indicated.

a. Full-Face Type: For flat-face, Class 125, cast-iron and cast-bronze flanges.

b. Narrow-Face Type: For raised-face, Class 250, cast-iron and steel flanges.

2. AWWA C110, rubber, flat face, 1/8 inch thick, unless otherwise indicated; full-face or ring type, unless otherwise indicated.

C. Flange Bolts and Nuts: ASME B18.2.1, carbon steel, unless otherwise indicated.

D. Plastic, Pipe-Flange Gasket, Bolts, and Nuts: Type and material recommended by piping system manufacturer, unless otherwise indicated.

E. Solder Filler Metals: ASTM B 32, lead-free alloys. Include water-flushable flux according to ASTM B 813.

F. Brazing Filler Metals: AWS A5.8, BCuP Series, copper-phosphorus alloys for general-duty brazing, unless otherwise indicated; AWS A5.8, BAg1, silver alloy for refrigerant piping, unless otherwise indicated.

G. Welding Filler Metals: Comply with AWS D10.12 for welding materials appropriate for wall thickness and chemical analysis of steel pipe being welded.

H. Solvent Cements for Joining Plastic Piping

1. ABS Piping: ASTM D 2235.

2. CPVC Piping: ASTM F 493.

3. PVC Piping: ASTM D 2564. Include primer according to ASTM F 656.

4. PVC to ABS Piping Transition: ASTM D 3138.

I. Fiberglass Pipe Adhesive: As furnished or recommended by pipe manufacturer.

2.06 Mechanical Sleeve Seals

A. Manufacturers:

1. Advance Products & Systems, Inc.

2. Calpico, Inc.

3. Metraflex Co.

4. Pipeline Seal and Insulator, Inc.

5. Or approved equal.

B. Description: Modular sealing element unit, designed for field assembly, to fill annular space between pipe and sleeve.

C. Construction: Sealing element - EPDM interlocking links shaped to fit surface of pipe, type and number required for pipe material and size of pipe; pressure plates - stainless steel, include two for each sealing element; connecting bolts and nuts - stainless steel of length required to secure pressure plates to sealing elements, include one for each sealing element.

2.07 Sleeves

A. Sleeves for Pipes Through Non-Fire Rated Floors: 18 gauge thick galvanized steel.

B. Sleeves for Pipes Through Non-Fire Rated Beams, Walls, Footings, and Potentially Wet Floors: Steel pipe or 18 gauge thick galvanized steel.

C. Sleeves for Pipes Through Fire Rated and Fire Resistive Floors and Walls, and Fire Proofing: Prefabricated fire rated sleeves including seals, UL listed.

D. Sleeves for below grade piping passing under footings: Class 52; ductile iron.

E. Sleeves for below grade piping passing through exterior walls - Mechanical Sleeve Seals.

F. Sleeves for Ductwork: Galvanized steel.

G. Miscellaneous

1. Stuffing Insulation: Glass fiber type; non-combustible; 3 lb. density.

2. Fire Safety Sealant: Intumescent material capable of expanding up to 8 to 10 times when exposed to temperatures beginning at 250°F. It shall have ICBO, BOCA I approved ratings to 3 hours per ASTM E814 (UL 1479). 3M Fire Barrier Caulk, Putty, strip and sheet forms.

2.08 Supports and Anchorages

A. Metal supports for Division 23 systems and equipment shall be provided.

2.09 General

A. Mechanical Demolition

1. Refer to Division 1 and Division 2 for general demolition requirements and procedures.

2. Disconnect, demolish, and remove mechanical systems, equipment, and components indicated to be removed.

   a. Piping to Be Removed: Remove portion of piping indicated to be removed and cap or plug remaining piping with same or compatible piping material.

   b. Piping to Be Abandoned in Place: Drain piping and cap or plug piping with same or compatible piping material.

   c. Ducts to Be Removed: Remove portion of ducts indicated to be removed and cap and seal remaining ducts with same or compatible ductwork material.

   d. Ducts to Be Abandoned in Place: Cap and seal ducts with same or compatible ductwork material. Provide duct supports as required to ensure proper support of abandoned ducts.

   e. Equipment to Be Removed: Disconnect and cap services and remove equipment.

   f. Equipment to Be Removed and Reinstalled: Disconnect and cap services and remove, clean, and store equipment; when appropriate, reinstall, reconnect, and make equipment operational.

   g. Equipment to Be Removed and Salvaged: Disconnect and cap services and remove equipment and deliver to Owner.

3. If pipe, duct, insulation, or equipment to remain is damaged in appearance or is unserviceable, remove damaged or unserviceable portions and replace with new products of equal capacity and quality.

4. Patch all building penetrations for systems and equipment that are removed.

B. Cutting And Patching

1. All cutting and patching of new and existing construction required for the installation of systems and equipment specified in Division 23 shall be the responsibility of the Division 23 Contractor. All cutting shall be accomplished with masonry saws, drills or similar equipment to provide neat uniform openings.

2. Patch and repair walls, floors, ceilings and roof with materials of same quality and appearance as adjacent surfaces unless otherwise shown. Surface finishes shall exactly match existing finishes of same materials. All patching shall meet the approval of the Owner's Representative.

3. All cutting and patching made necessary to repair defective equipment, defective workmanship or be neglect of this Contractor to properly anticipate his requirements shall be included in Division 23.

4. Cut carefully to minimize necessity for repairs to existing work. Do not cut beams, columns, or trusses or other structural members without the Owner Representative's written approval.

5. Cutting, patching, repairing, and replacing pavement, sidewalks, roads, and curbs to permit installation of work specified or indicated under this Division is responsibility of Division 23.

C. Piping Systems - Common Requirements

1. Install piping according to the following requirements and Division 23 Sections specifying piping systems.

2. Install piping in concealed locations, unless otherwise indicated and except in equipment rooms and service areas.

3. Install piping indicated to be exposed and piping in equipment rooms and service areas at right angles or parallel to building walls. Diagonal runs are prohibited unless specifically indicated otherwise.

4. Install piping above accessible ceilings to allow sufficient space for ceiling panel removal.

5. Install piping to permit valve servicing.

6. Install piping at indicated slopes.

7. Install piping free of sags and bends.

8. Install piping to allow application of insulation.

9. Select system components with pressure rating equal to or greater than system operating pressure.

10. Fire-Barrier Penetrations: Maintain indicated fire rating of walls, partitions, ceilings, and floors at pipe penetrations. Seal pipe penetrations with firestop materials.

11. Verify final equipment locations for roughing-in.

12. Refer to equipment specifications in other Sections of these Specifications for roughing-in requirements.

D. Piping Connections

1. Make connections according to the following, unless otherwise indicated:

   a. Install unions, in piping NPS 2 and smaller, adjacent to each valve and at final connection to each piece of equipment.

   b. Install flanges, in piping NPS 2-1/2 and larger, adjacent to flanged valves and at final connection to each piece of equipment.

E. Equipment Installation - Common Requirements

1. Install equipment to allow maximum possible headroom unless specific mounting heights are not indicated.

2. Install equipment level and plumb, parallel and perpendicular to other building systems and components in exposed interior spaces, unless otherwise indicated.

3. Install mechanical equipment to facilitate service, maintenance, and repair or replacement of components. Connect equipment for ease of disconnecting, with minimum interference to other installations. Extend grease fittings to accessible locations.

4. Install equipment to allow right of way for piping installed at required slope.

2.10 Access Doors

A. Provide access doors where specialties are not exposed unless indicated to be provided under other Divisions. Access doors shall comply with Division 08. Coordinate size and location with access requirements.

B. Access door locations may occasionally be shown on the drawings, to indicate specific location and/or installation requirements in certain instances. This shall not be construed to indicate that all required access doors have been shown on the drawings. It is the Contractor's responsibility to provide access doors as required.

2.11 Dielectric fittings

A. Provide dielectric fittings whenever connecting piping of dissimilar metals.

2.12 Escutcheons

A. Install escutcheons for penetrations of walls, ceilings, and floors in finished spaces.

2.13 Housekeeping Pads

A. Refer to individual specification Sections for equipment requiring housekeeping pads.

B. Construct housekeeping pads of dimensions not less than 4 inches larger in both directions than supported unit. Also ensure minimum concrete coverage around anchor bolts is maintained to meet both anchor bolt manufacturer's requirements and seismic codes.

C. Install dowel rods to connect concrete base to concrete floor. Unless otherwise indicated, install dowel rods on 18-inch centers around the full perimeter of the base.

D. Anchor equipment to concrete base according to equipment manufacturer's written instructions and according to seismic codes.

E. Anchor Bolts

1. Install anchor bolts according to anchor-bolt manufacturer's written instructions and according to seismic codes.

2. Extend anchor bolts through concrete base, and anchor into structural concrete floor.

3. Install anchor bolts to elevations required for proper attachment to supported equipment.

2.14 Mechanical Sleeve Seals

A. Provide mechanical sleeve seals at the following locations:

1. Below grade wall piping penetrations

2. Slab on grade floor and basement floor piping penetrations.

3. Penetrations of all separations where separation serves as a moisture barrier.

2.15 Painting

A. Damage and Touchup: Repair marred and damaged factory-painted finishes with materials and procedures to match original factory finish.

B. Refer to individual specifications Sections for additional paint scope requirements.

2.16 Sleeves

A. Provide sleeves for above grade duct and piping penetrations of walls, roofs and floors.

1. Exception: Sleeves are not required for core drilled holes.

B. Set sleeves in position in formwork. Provide reinforcing around sleeves.

C. Size sleeves large enough to allow for movement due to expansion and contraction. Provide for continuous insulation wrapping, where duct or pipe is to be insulated.

D. Where piping or ductwork penetrates a roof, floor or wall, close off space between pipe or duct and sleeve with fiberglass insulation and sealant (air tight). This applies to all roofs, walls, or floors regardless of fire rating. Note: 3 lb. insulation not required at roof penetrations. Use fire safeing sealant at penetrations of fire rated floors and walls.

E. Furnish and install waterproof sleeves on all piping and duct penetrations through the floor slabs in mechanical room and any area where pipes and ducts pass through slabs where water spillage could cause damage to ceilings below. Top of sleeve shall extend 2" (51 mm) above floor.

2.17 Supports and Anchorages

A. Metal

1. Cut, fit, and place miscellaneous metal supports accurately in location, alignment, and elevation to support and anchor mechanical materials and equipment.

2. Field Welding: Comply with AWS D1.1.

B. Wood

1. Cut, fit, and place wood grounds, nailers, blocking, and anchorages to support, and anchor mechanical materials and equipment.

2. Select fastener sizes that will not penetrate members if opposite side will be exposed to view or will receive finish materials. Tighten connections between members. Install fasteners without splitting wood members.

3. Attach to substrates as required to support applied loads.

END OF SECTION

SECTION 23 05 29

HANGERS AND SUPPORTS FOR HVAC PIPING AND EQUIPMENT

PART 1 - GENERAL

1.01 RELATED DOCUMENTS

A. Drawings and general provisions of the Contract, including General and Supplementary Conditions and Division 01 Specification Sections, apply to this Section.

1.02 SUMMARY

A. Section Includes:

1. Metal pipe hangers and supports.
2. Trapeze pipe hangers.
3. Fiberglass pipe hangers.
4. Metal framing systems.
5. Fiberglass strut systems.
6. Thermal-hanger shield inserts.
7. Fastener systems.
8. Pipe stands.
9. Equipment stands.
10. Equipment supports.

B. Related Requirements:

1. Section 230548 "Vibration and Seismic Controls for HVAC" for vibration isolation devices.

1.03 ACTION SUBMITTALS

A. Product Data: For each type of product.

B. Shop Drawings: fabrication and installation details and include calculations for the following; include Product Data for components:

1. Trapeze pipe hangers.

2. Metal framing systems.

3. Fiberglass strut systems.

4. Pipe stands.

5. Equipment supports.

1.04 INFORMATIONAL SUBMITTALS

A. Welding certificates.

1.05 QUALITY ASSURANCE

A. Structural-Steel Welding Qualifications: Qualify procedures and personnel according to AWS D1.1/D1.1M, "Structural Welding Code - Steel."

B. Pipe Welding Qualifications: Qualify procedures and operators according to ASME Boiler and Pressure Vessel Code, Section IX.

PART 2 - PRODUCTS

2.01 PERFORMANCE REQUIREMENTS

A. Structural Performance: Hangers and supports for HVAC piping and equipment shall withstand the effects of gravity loads and stresses within limits and under conditions indicated according to ASCE.

1. Design supports for multiple pipes, including pipe stands, capable of supporting combined weight of supported systems, system contents, and test water.

2. Design equipment supports capable of supporting combined operating weight of supported equipment and connected systems and components.

3. Design seismic-restraint hangers and supports for piping and equipment and obtain approval from authorities having jurisdiction.

2.02 METAL PIPE HANGERS AND SUPPORTS

A. Carbon-Steel Pipe Hangers and Supports:

1. Description: MSS SP-58, Types 1 through 58, factory-fabricated components.

2. Galvanized Metallic Coatings: Pregalvanized, hot-dip galvanized, or electro-galvanized.

3. Nonmetallic Coatings: Plastic coated, or epoxy powder coated.

4. Padded Hangers: Hanger with fiberglass or other pipe insulation pad or cushion to support bearing surface of piping.

B. Stainless Steel Pipe Hangers and Supports:

1. Description: MSS SP-58, Types 1 through 58, factory-fabricated components.

2. Padded Hangers: Hanger with fiberglass or other pipe insulation pad or cushion to support bearing surface of piping.

C. Copper Pipe and Tube Hangers:

1. Description: MSS SP-58, Types 1 through 58, copper-plated steel, factory-fabricated components.

2.03 TRAPEZE PIPE HANGERS

A. Description: MSS SP-58, Type 59, shop- or field-fabricated pipe-support assembly made from structural carbon-steel shapes with MSS SP-58 carbon-steel hanger rods, nuts, saddles, and U-bolts.

2.04 METAL FRAMING SYSTEMS

A. MFMA Manufacturer Metal Framing Systems:

1. Description: Shop- or field-fabricated, pipe-support assembly made of steel channels, accessories, fittings, and other components for supporting multiple parallel pipes.

2. Standard: Comply with MFMA-4 factory-fabricated components for field assembly.

3. Channels: Continuous slotted stainless steel, Type 304 channel with inturned lips.

4. Channel Width: Selected for applicable load criteria.

5. Channel Nuts: Formed or stamped nuts or other devices designed to fit into channel slot and, when tightened, prevent slipping along channel.

6. Hanger Rods: Continuous-thread rod, nuts, and washer made of galvanized steel.

2.05 FASTENER SYSTEMS

A. Powder-Actuated Fasteners: Threaded-steel stud, for use in hardened portland cement concrete with pull-out, tension, and shear capacities appropriate for supported loads and building materials where used.

B. Mechanical-Expansion Anchors: Insert-wedge-type anchors for use in hardened portland cement concrete; with pull-out, tension, and shear capacities appropriate for supported loads and building materials where used.

2.06 PIPE STANDS

A. General Requirements for Pipe Stands: Shop- or field-fabricated assemblies made of manufactured corrosion-resistant components to support roof-mounted piping.

B. Compact Pipe Stand:

1. Description: Single base unit with integral-rod roller, pipe clamps, or V-shaped cradle to support pipe, for roof installation without membrane penetration.

2. Base: Single, vulcanized rubber, molded polypropylene, or polycarbonate.

3. Hardware: Galvanized steel or polycarbonate.

4. Accessories: Protection pads.

C. Low-Profile, Single Base, Single-Pipe Stand:

1. Description: Single base with vertical and horizontal members, and pipe support, for roof installation without membrane protection.

2. Base: Single, vulcanized rubber, molded polypropylene, or polycarbonate.

2.07 EQUIPMENT SUPPORTS

A. Description: Welded, shop- or field-fabricated equipment support made from structural carbon-steel shapes.

2.08 OUTDOOR EQUIPMENT STANDS

1. Description: Individual foot supports with elevated adjustable channel cross bars and clamps/fasteners/bolts for ground or roof supported outdoor equipment components, without roof membrane penetration, in a pre-fabricated system that

can be modularly-assembled on site.

2. Foot Material: Rubber or polypropylene.

3. Rails Material: Hot dip galvanized carbon steel.

4. Wind/Sliding Load Resistance: Up to 100 mph minimum.

2.09 MATERIALS

A. Aluminum: ASTM B221.

B. Carbon Steel: ASTM A1011/A1011M.

C. Structural Steel: ASTM A36/A36M, carbon-steel plates, shapes, and bars; galvanized.

D. Stainless Steel: ASTM A240/A240M.

E. Threaded Rods: Continuously threaded. Zinc-plated or galvanized steel for indoor applications and stainless steel for outdoor applications. Mating nuts and washers of similar materials as rods.

F. Grout: ASTM C1107/C1107M, factory-mixed and -packaged, dry, hydraulic-cement, nonshrink and nonmetallic grout; suitable for interior and exterior applications.

1. Properties: Nonstaining, noncorrosive, and nongaseous.

2. Design Mix: 5000-psi, 28-day compressive strength.

PART 3 - EXECUTION

3.01 APPLICATION

A. Strength of Support Assemblies: Where not indicated, select sizes of components so strength will be adequate to carry present and future static loads within specified loading limits. Minimum static design load used for strength determination shall be weight of supported components plus 200 lb.

3.02 HANGER AND SUPPORT INSTALLATION

A. Metal Pipe-Hanger Installation: Comply with MSS SP-58. Install hangers, supports, clamps, and attachments as required to properly support piping from the building structure.

B. Metal Trapeze Pipe-Hanger Installation: Comply with MSS SP-58. Arrange for grouping of parallel runs of horizontal piping, and support together on field-fabricated trapeze pipe hangers.

1. Pipes of Various Sizes: Support together and space trapezes for smallest pipe size or install intermediate supports for smaller diameter pipes as specified for individual pipe hangers.

2. Field fabricate from ASTM A36/A36M, carbon-steel shapes selected for loads being supported. Weld steel according to AWS D1.1/D1.1M.

C. Fiberglass Pipe-Hanger Installation: Comply with applicable portions of MSS SP-58. Install hangers and attachments as required to properly support piping from building structure.

D. Metal Framing System Installation: Arrange for grouping of parallel runs of piping, and support together on field-assembled strut systems.

E. Thermal-Hanger Shield Installation: Install in pipe hanger or shield for insulated piping.

F. Fastener System Installation:

1. Install powder-actuated fasteners for use in lightweight concrete or concrete slabs less than 4 inches thick in concrete after concrete is placed and completely cured. Use operators that are licensed by powder-actuated tool manufacturer. Install fasteners according to powder-actuated tool manufacturer's operating manual.

2. Install mechanical-expansion anchors in concrete after concrete is placed and completely cured. Install fasteners according to manufacturer's written instructions.

G. Pipe Stand Installation:

1. Pipe Stand Types except Curb-Mounted Type: Assemble components and mount on smooth roof surface. Do not penetrate roof membrane.

2. Curb-Mounted-Type Pipe Stands: Assemble components or fabricate pipe stand and mount on permanent, stationary roof curb.

H. Install hangers and supports complete with necessary attachments, inserts, bolts, rods, nuts, washers, and other accessories.

I. Equipment Support Installation: Fabricate from welded-structural-steel shapes.

J. Install hangers and supports to allow controlled thermal and seismic movement of piping systems, to permit freedom of movement between pipe anchors, and to facilitate action of expansion joints, expansion loops, expansion bends, and similar units.

K. Install lateral bracing with pipe hangers and supports to prevent swaying.

L. Load Distribution: Install hangers and supports so that piping live and dead loads and stresses from movement will not be transmitted to connected equipment.

M. Pipe Slopes: Install hangers and supports to provide indicated pipe slopes and to not exceed maximum pipe deflections allowed by ASME B31.9 for building services piping.

N. Insulated Piping:

1. Attach clamps and spacers to piping.

   a. Piping Operating above Ambient Air Temperature: Clamp may project through insulation.

   b. Piping Operating below Ambient Air Temperature: Use thermal-hanger shield insert with clamp sized to match OD of insert.

   c. Do not exceed pipe stress limits allowed by ASME B31.9 for building services piping.

2. Install MSS SP-58, Type 39, protection saddles if insulation without vapor barrier is indicated. Fill interior voids with insulation that matches adjoining insulation.

   a. Option: Thermal-hanger shield inserts may be used. Include steel weight-distribution plate for pipe NPS 4 and larger if pipe is installed on rollers.

3. Install MSS SP-58, Type 40, protective shields on cold piping with vapor barrier. Shields shall span an arc of 180 degrees.

   a. Option: Thermal-hanger shield inserts may be used. Include steel weight-distribution plate for pipe NPS 4 and larger if pipe is installed on rollers.

3.03 EQUIPMENT SUPPORTS

A. Fabricate structural-steel stands to suspend equipment from structure overhead or to support equipment above floor.

B. Grouting: Place grout under supports for equipment and make bearing surface smooth.

C. Provide lateral bracing, to prevent swaying, for equipment supports.

3.04 METAL FABRICATIONS

A. Cut, drill, and fit miscellaneous metal fabrications for trapeze pipe hangers and equipment supports.

B. Fit exposed connections together to form hairline joints. Field weld connections that cannot be shop welded because of shipping size limitations.

C. Field Welding: Comply with AWS D1.1/D1.1M procedures for shielded, metal arc welding; appearance and quality of welds; and methods used in correcting welding work; and with the following:

1. Use materials and methods that minimize distortion and develop strength and corrosion resistance of base metals.

2. Obtain fusion without undercut or overlap.

3. Remove welding flux immediately.

4. Finish welds at exposed connections so no roughness shows after finishing and so contours of welded surfaces match adjacent contours.

3.05 ADJUSTING

A. Hanger Adjustments: Adjust hangers to distribute loads equally on attachments and to achieve indicated slope of pipe.

B. Trim excess length of continuous-thread hanger and support rods to 1-1/2 inches.

END OF SECTION

SECTION 23 05 48

VIBRATION AND SEISMIC CONTROLS FOR HVAC

PART 1 - GENERAL

1.01 RELATED DOCUMENTS

A. Drawings and general provisions of the Contract, including General and Supplementary Conditions and Division 01 Specification Sections, apply to this Section.

1.02 SUMMARY

A. Section Includes:

1. Concrete inserts.

2. Vibration isolation equipment bases.

3. Restrained isolation roof-curb rails.

1.03 DEFINITIONS

A. Designated Seismic System: An HVAC component that requires design in accordance with ASCE/SEI 7, Ch. 13, and for which the Component Importance Factor is greater than 1.0.

B. IBC: International Building Code.

C. OSHPD: Office of Statewide Health Planning and Development (for the State of California owned and regulated medical facilities).

1.04 ACTION SUBMITTALS

A. Product Data: For each type of product.

1. Include rated load, rated deflection, and overload capacity for each vibration isolation device.

2. Include load rating for each wind-force-restraint fitting and assembly.

3. Illustrate and indicate style, material, strength, fastening provision, and finish for each type and size of vibration isolation device and seismic- and wind-force restraint component.
4. Annotate types and sizes of seismic restraints and accessories, complete with listing markings or report numbers and load rating in tension and compression as evaluated by an agency acceptable to authorities having jurisdiction.

5. Annotate to indicate application of each product submitted and compliance with requirements.

6. Interlocking Snubbers: Include ratings for horizontal, vertical, and combined loads.

B. Shop Drawings:

1. Detail fabrication and assembly of equipment bases.

2. Vibration Isolation Base Details: Detail fabrication including anchorages and attachments to structure and to supported equipment. Include adjustable motor bases, rails, and frames for equipment mounting.

C. Submittal:

1. For each seismic-restraint and wind-load protection device, including seismic-restrained mounting, concrete anchor and insert, restrained isolation roof-curb rail that is required by this Section or is indicated on Drawings, submit the following:

a. Seismic and Wind-Load Restraint, and Vibration Isolation Base Selection: Select vibration isolators, seismic and wind-load restraints, and vibration isolation bases complying with performance requirements, design criteria, and analysis data.

b. Riser Supports: Include riser diagrams and calculations showing anticipated expansion and contraction at each support point, initial and final loads on building structure, spring deflection changes, and seismic loads. Include certification by professional engineer that riser system was examined for excessive stress and that none exists.

c. Concrete Anchors and Inserts: Include calculations showing anticipated seismic and wind loads. Include certification that device is approved by an NRTL for seismic reinforcement use.

d. Seismic Design Calculations: Submit all input data and loading calculations prepared under "Seismic Design Calculations" Paragraph in "Performance Requirements" Article.

e. Wind-Load Design Calculations: Submit all static and dynamic loading calculations prepared under "Wind-Load Design Calculations" Paragraph in

"Performance Requirements" Article.

f. Qualified Professional Engineer: All designated-design submittals for seismic- and wind-restraint calculations are to be signed and sealed by qualified professional engineer responsible for their preparation.

2. Seismic and Wind Restraint Detail Drawing:

a. Design Analysis: To support selection and arrangement of seismic and wind restraints. Include calculations of combined tensile and shear loads.

b. Details: Indicate fabrication and arrangement. Detail attachments of restraints to restrained items and to the structure. Show attachment locations, methods, and spacings. Identify components, list their strengths, and indicate directions and values of forces transmitted to the structure during seismic events. Indicate association with vibration isolation devices.

c. Coordinate seismic-restraint and vibration isolation details with wind-restraint details required for equipment mounted outdoors. Comply also with requirements in other Sections for equipment mounted outdoors.

3. All submittals for seismic- and wind-restraint detail Drawings are to be signed and sealed by qualified professional engineer responsible for their preparation.

4. Design Calculations for Vibration Isolation Devices: Calculate static and dynamic loading due to equipment weight and operating forces required to select proper vibration isolators, and to design vibration isolation bases.

5. Riser Supports: Include riser diagrams and calculations showing anticipated expansion and contraction at each support point, initial and final loads on building structure, and spring deflection changes. Include certification that riser system was examined for excessive stress and that none exists.

1.05 INFORMATIONAL SUBMITTALS

A. Coordination Drawings: Show coordination of vibration isolation device installation and seismic bracing for HVAC piping and equipment with other systems and equipment in the vicinity, including other supports and restraints, if any.

B. Qualification Data: For professional engineer and testing agency.

C. Welding certificates.

D. Air-Spring Isolator Performance Certification: Include natural frequency, load, and damping test data performed by an independent agency.

PART 2 - PRODUCTS

2.01 PERFORMANCE REQUIREMENTS

A. Engage a qualified professional engineer, as defined in Section 01 43 00 "Quality Assurance," to design seismic and wind load control system.

1. Seismic and Wind-Load Performance: Equipment shall withstand the effects of earthquake motions and high wind events determined in accordance with ASCE/SEI 7-05.

2.02 POST-INSTALLED CONCRETE ANCHORS

A. Mechanical Anchor Bolts:

1. Drilled-in and stud-wedge or female-wedge type in zinc-coated steel for interior applications and stainless steel for exterior applications. Select anchor bolts with strength for anchor and as tested according to ASTM E488/E488M.

B. Adhesive Anchor Bolts:

1. Drilled-in and capsule anchor system containing PVC or urethane methacrylate-based resin and accelerator, or injected polymer or hybrid mortar adhesive. Provide anchor bolts and hardware with zinc-coated steel for interior applications and stainless steel for exterior applications. Select anchor bolts with strength required for anchor and as tested according to ASTM E488/E488M.

2.03 CONCRETE INSERTS

A. Provide preset concrete inserts that are seismically prequalified in accordance with ICC-ES AC466 testing.

B. Comply with ANSI/MSS SP-58.

2.04 VIBRATION ISOLATION EQUIPMENT BASES

A. Steel Rails: Factory-fabricated, welded, structural-steel rails.

1. Design Requirements: Lowest possible mounting height with not less than 1-inch clearance above the floor. Include equipment anchor bolts and auxiliary motor slide rails.

a. Include supports for suction and discharge elbows for pumps.

2. Structural Steel: Steel shapes, plates, and bars complying with ASTM A36/A36M. Rails shall have shape to accommodate supported equipment.

3. Support Brackets: Factory-welded steel brackets on frame for outrigger isolation mountings and to provide for anchor bolts and equipment support.

B. Steel Bases: Factory-fabricated, welded, structural-steel bases and rails.

1. Design Requirements: Lowest possible mounting height with not less than 1-inch clearance above the floor. Include equipment anchor bolts and auxiliary motor slide bases or rails.

2. Structural Steel: Steel shapes, plates, and bars complying with ASTM A36/A36M. Bases shall have shape to accommodate supported equipment.

3. Support Brackets: Factory-welded steel brackets on frame for outrigger isolation mountings and to provide for anchor bolts and equipment support.

4. Structural Steel: Steel shapes, plates, and bars complying with ASTM A36/A36M. Bases shall have shape to accommodate supported equipment.

5. Support Brackets: Factory-welded steel brackets on frame for outrigger isolation mountings and to provide for anchor bolts and equipment support.

6. Fabrication: Fabricate steel templates to hold equipment anchor-bolt sleeves and anchors in place during placement of concrete. Obtain anchor-bolt templates from supported equipment manufacturer.

2.05 RESTRAINED ISOLATION ROOF-CURB RAILS

A. Description: Factory-assembled, fully enclosed, insulated, air- and watertight curb rail designed to resiliently support equipment and to withstand seismic and wind forces.

B. Upper Frame: To provide continuous support for equipment and to be captive to resiliently resist seismic and wind forces.

C. Lower Support Assembly: To be formed sheet metal section containing adjustable and removable steel springs that support the upper frame. Lower support assembly to have a means for attaching to building structure and a wood nailer for attaching roof materials, and to be insulated with a minimum of 2 inches of rigid, glass-fiber insulation on inside of assembly. Mount adjustable, restrained-spring isolators on elastomeric vibration isolation pads and provide access ports, for level adjustment, with removable waterproof covers at all isolator locations. Locate isolators so they are accessible for adjustment at any time during the life of the installation without interfering with integrity of roof.

D. Snubber Bushings: All-directional, elastomeric snubber bushings at least 1/4 inch thick.

E. Water Seal: Galvanized sheet metal with EPDM seals at corners, attached to upper support frame, extending down past wood nailer of lower support assembly, and counterflashed over roof materials.

PART 3 - EXECUTION

3.01 EXAMINATION

A. Examine areas and equipment to receive vibration isolation and seismic and wind control devices for compliance with requirements for installation tolerances and other conditions affecting performance of the Work.

B. Examine roughing-in of reinforcement and cast-in-place anchors to verify actual locations before installation.

C. Proceed with installation only after unsatisfactory conditions have been corrected.

3.02 APPLICATIONS

3.03 INSTALLATION OF VIBRATION-CONTROL, WIND-LOAD CONTROL, AND SEISMIC-RESTRAINT DEVICES

A. Provide vibration-control devices for systems and equipment where indicated in Equipment Schedules or Vibration-Control Devices Schedules, where indicated on Drawings, or where Specifications indicate they are to be installed on specific equipment and systems.

B. Provide seismic-restraint and wind-load control devices for systems and equipment where indicated in Equipment Schedules or Seismic-Restraint Devices Schedules, where indicated on Drawings, where Specifications indicate they are to be installed on specific equipment and systems, and where required by applicable codes.

C. Installation of vibration isolators, wind-load restraints must not cause any change of position of equipment, piping, or ductwork resulting in stresses or misalignment.

D. Equipment Restraints:

1. Install seismic snubbers on HVAC equipment mounted on vibration isolators. Locate snubbers as close as possible to vibration isolators and bolt to equipment base and supporting structure.

2. Install resilient bolt isolation washers on equipment anchor bolts where clearance between anchor and adjacent surface exceeds 0.125 inch.

E. Install seismic- and wind-load- restraint cables so they do not bend across edges of adjacent equipment or building structure.

F. Install bushing assemblies for anchor bolts for floor-mounted equipment, arranged to provide resilient media between anchor bolt and mounting hole in concrete base.

G. Install bushing assemblies for mounting bolts for wall-mounted equipment, arranged to provide resilient media where equipment or equipment-mounting channels are attached to wall.

H. Attachment to Structure: If specific attachment is not indicated, anchor bracing to structure at flanges of beams, at upper truss chords of bar joists, or at concrete members.

I. Mechanical Anchor Bolts:

1. Identify position of reinforcing steel and other embedded items prior to drilling holes for anchors. Do not damage existing reinforcing or embedded items during coring or drilling. Notify structural engineer if reinforcing steel or other embedded items are encountered during drilling. Locate and avoid prestressed tendons, electrical and telecommunications conduit, and gas lines.

2. Do not drill holes in concrete or masonry until concrete, mortar, or grout has achieved full design strength.

3. Wedge-Type Anchor Bolts: Protect threads from damage during anchor installation. Heavy-duty sleeve anchors shall be installed with sleeve fully engaged in the structural element to which anchor is to be fastened.

4. Adhesive-Type Anchor Bolts: Clean holes to remove loose material and drilling dust prior to installation of adhesive. Place adhesive in holes proceeding from the bottom of the hole and progressing toward the surface in such a manner as to avoid introduction of air pockets in the adhesive.

5. Set anchors to manufacturer's recommended torque, using a torque wrench.

6. Install zinc-coated steel anchors for interior and stainless steel anchors for exterior applications.

END OF SECTION

SECTION 23 05 53

HVAC IDENTIFICATION

PART 1 - GENERAL

1.01 RELATED DOCUMENTS

A. Drawings and general provisions of the Contract, including General and Supplementary Conditions and Division 1 Specification Sections, apply to this Section.

B. Section 23 00 00 – General HVAC Requirements

1.02 REFERENCES

A. General

1. ASME A13.1 - Scheme for the Identification of Piping Systems

1.03 SUBMITTALS

A. General

1. Product data for specified materials.

2. Samples: For color, letter style, and graphic representation required for each identification material and device.

3. Valve numbering scheme.

B. Valve Schedules:

1. For each piping system. Furnish extra copies (in addition to mounted copies) to include in maintenance manuals.

1.04 OPERATION AND MAINTENANCE MATERIALS

A. General: Include valve tag identification schedule.

1.05 QUALITY ASSURANCE

A. ASME Compliance: Comply with ASME A13.1, "Scheme for the Identification of Piping Systems," for letter size, length of color field, colors, and viewing angles of identification devices for piping.

1.06 COORDINATION

A. Coordinate installation of identifying devices with completion of covering and painting of surfaces where devices are to be applied.

B. Coordinate installation of identifying devices with location of access panels and doors.

C. Install identifying devices before installing acoustical ceilings and similar concealment.

PART 2 - PRODUCTS

2.01 ACCESS PANEL AND DOOR MARKERS:

A. 1/16-inch- thick, engraved laminated plastic, with abbreviated terms and numbers corresponding to identification. Provide 1/8-inch center hole for attachment.

B. Fasteners: Self-tapping, stainless-steel screws or contact-type, permanent adhesive.

2.02 CEILING TACKS

A. Description: Steel with 3/4-inch diameter color coded head.

B. Color code as follows:

1. HVAC equipment: Yellow

2.03 NAMEPLATES

A. Description: Laminated three-layer plastic with engraved white letters on black background

2.04 TAGS

A. Stamped or engraved with 1/4-inch letters for piping system abbreviation and 1/2-inch numbers, with numbering scheme as approved. Provide 5/32-inch hole for fastener.

1. Material: 0.032-inch- thick brass.

2. Valve-Tag Fasteners: Brass wire-link or beaded chain, or S-hook.

PART 3 - EXECUTION

3.01 GENERAL

A. Preparation

1. Degrease and clean surfaces to receive adhesive for identification materials.

2. Provide identifying devices after completion of coverings and painting.

B. Adjusting

1. Relocate mechanical identification materials and devices that have become visually blocked by other work.

C. Cleaning

1. Clean faces of mechanical identification devices and glass frames of valve schedules.

3.02 NAMEPLATES

A. For unfinished canvas covering, apply paint primer before applying labels.

B. Install equipment markers with permanent adhesive on or near each major item of mechanical equipment. Data required for markers may be included on signs, and markers may be omitted if both are indicated.

C. Stenciled Equipment Marker Option: Stenciled markers may be provided instead of laminated-plastic equipment markers, at Installer's option, if lettering larger than 1 inch high is needed for proper identification because of distance from normal location of required identification.

3.03 IDENTIFICATION SCHEDULE

A. Identify all scheduled equipment (air handling units, fans, pumps, heat transfer equipment, tanks, etc.) and water treatment devices with plastic nameplates.

B. Identify control panels and major control components outside panels with plastic nameplates.

C. Tag automatic controls, instruments, and relays. Key to control schematic.

D. Identify piping, concealed or exposed, with plastic pipe markers or plastic tape pipe markers. Identify service, flow direction, and pressure (when applicable). Install in clear view and align with axis of piping. Locate identification not to exceed 20 feet on straight runs including risers and drops, adjacent to each valve and tee, at each side of penetration of structure or enclosure, and at each obstruction.

E. Provide ceiling tacks to locate valves, terminal boxes, or dampers above T-bar type panel ceilings. Locate in corner of panel closest to equipment.

END OF SECTION

SECTION 23 05 93

TESTING, ADJUSTING, AND BALANCING FOR HVAC

PART 1 - GENERAL

1.01 RELATED DOCUMENTS

A. Drawings and general provisions of the Contract, including General and Supplementary Conditions and Division 01 Specification Sections, apply to this Section.

1.02 SUMMARY

A. Section Includes:

1. Testing, Adjusting, and Balancing of Air Systems:
2. Testing, adjusting, and balancing of existing HVAC systems and equipment.
3. Procedures for exhaust hoods.
4. Sound tests.
5. Vibration tests.
6. Duct leakage tests verification.
7. HVAC-control system verification.

1.03 DEFINITIONS

A. AABC: Associated Air Balance Council.

B. NEBB: National Environmental Balancing Bureau.

C. TAB: Testing, adjusting, and balancing.

1.04 PREINSTALLATION MEETINGS

1. Minimum Agenda Items:

   a. The Contract Documents examination report.

b. The TAB plan.

c. Needs for coordination and cooperation of trades and subcontractors.

d. Proposed procedures for documentation and communication flow.

1.05 INFORMATIONAL SUBMITTALS

A. Qualification Data: Within 30 days of Contractor's Notice to Proceed, submit documentation that the TAB specialist and this Project's TAB team members meet the qualifications specified in "Quality Assurance" Article.

B. Contract Documents Examination Report: Within 30 days of Contractor's Notice to Proceed, submit the Contract Documents review report, as specified in Part 3.

C. Strategies and Procedures Plan: Within 30 of Contractor's Notice to Proceed, submit TAB strategies and step-by-step procedures, as specified in "Preparation" Article.

D. System Readiness Checklists: Within 30 days of Contractor's Notice to Proceed, submit system readiness checklists, as specified in "Preparation" Article.

E. Examination Report: Submit a summary report of the examination review required in "Examination" Article.

F. Certified TAB reports.

G. Sample report forms.

H. Instrument calibration reports, to include the following:

1. Instrument type and make.

2. Serial number.

3. Application.

4. Dates of use.

5. Dates of calibration.

1.06 QUALITY ASSURANCE

A. TAB Specialists Qualifications, Certified by AABC:

1. TAB Field Supervisor: Employee of the TAB specialist and certified by AABC.

2. TAB Technician: Employee of the TAB specialist and certified by AABC.

B. TAB Specialists Qualifications, Certified by or TABB:

1. TAB Field Supervisor: Employee of the TAB specialist and certified by TABB.

2. TAB Technician: Employee of the TAB specialist and certified by TABB.

C. Instrumentation Type, Quantity, Accuracy, and Calibration: Comply with requirements in ASHRAE 111, Section 4, "Instrumentation."

D. ASHRAE/IES 90.1 Compliance: Applicable requirements in ASHRAE/IES 90.1, Section 6.7.2.3 - "System Balancing."

E. Code and AHJ Compliance: TAB is required to comply with governing codes and requirements of authorities having jurisdiction.

1.07 FIELD CONDITIONS

A. Full Owner Occupancy: Owner will occupy the site and existing building during entire TAB period. Cooperate with Owner during TAB operations to minimize conflicts with Owner's operations.

B. Partial Owner Occupancy: Owner may occupy completed areas of building before Substantial Completion. Cooperate with Owner during TAB operations to minimize conflicts with Owner's operations.

PART 2 - PRODUCTS (Not Applicable)

PART 3 - EXECUTION

3.01 EXAMINATION

A. Examine the Contract Documents to become familiar with Project requirements and to discover conditions in systems designs that may preclude proper TAB of systems and equipment.

B. Examine installed systems for balancing devices, such as test ports, gauge cocks, thermometer wells, flow-control devices, balancing valves and fittings, and manual volume dampers. Verify that locations of these balancing devices are applicable for intended purpose and are accessible.

C. Examine the approved submittals for HVAC systems and equipment.

D. Examine design data, including HVAC system descriptions, statements of design assumptions for environmental conditions and systems output, and statements of philosophies and assumptions about HVAC system and equipment controls.

E. Examine ceiling plenums and underfloor air plenums used for HVAC to verify that they are properly separated from adjacent areas and sealed.

F. Examine equipment performance data, including fan and pump curves.

1. Relate performance data to Project conditions and requirements, including system effects that can create undesired or unpredicted conditions that cause reduced capacities in all or part of a system.

2. Calculate system-effect factors to reduce performance ratings of HVAC equipment when installed under conditions different from the conditions used to rate equipment performance. To calculate system effects for air systems, use tables and charts found in AMCA 201, "Fans and Systems," or in SMACNA's "HVAC Systems - Duct Design." Compare results with the design data and installed conditions.

G. Examine system and equipment installations and verify that field quality-control testing, cleaning, and adjusting specified in individual Sections have been performed.

H. Examine test reports specified in individual system and equipment Sections.

I. Examine HVAC equipment and verify that bearings are greased, belts are aligned and tight, filters are clean, and equipment with functioning controls is ready for operation.

J. Examine terminal units, such as variable-air-volume boxes, and verify that they are accessible and their controls are connected and functioning.

K. Examine temporary and permanent strainers. Verify that temporary strainer screens used during system cleaning and flushing have been removed and permanent strainer baskets are installed and clean.

L. Examine control valves for proper installation for their intended function of isolating, throttling, diverting, or mixing fluid flows.

M. Examine heat-transfer coils for correct piping connections and for clean and straight fins.

N. Examine system pumps to ensure absence of entrained air in the suction piping.

O. Examine operating safety interlocks and controls on HVAC equipment.

P. Examine control dampers for proper installation for their intended function of isolating, throttling, diverting, or mixing air flows.

Q. Report deficiencies discovered before and during performance of TAB procedures. Observe and record system reactions to changes in conditions. Record default set points if different from indicated values.

3.02 PREPARATION

A. Prepare a TAB plan that includes the following:

1. Equipment and systems to be tested.

2. Strategies and step-by-step procedures for balancing the systems.

3. Instrumentation to be used.

4. Sample forms with specific identification for all equipment.

B. Perform system-readiness checks of HVAC systems and equipment to verify system readiness for TAB work. Include, at a minimum, the following:

1. Airside:

a. Verify that leakage and pressure tests on air distribution systems have been satisfactorily completed.

b. Duct systems are complete with terminals installed.

c. Volume, smoke, and fire dampers are open and functional.

d. Clean filters are installed.

e. Fans are operating, free of vibration, and rotating in correct direction.

f. Variable-frequency controllers' startup is complete and safeties are verified.

g. Automatic temperature-control systems are operational.

h. Ceilings are installed.

i. Windows and doors are installed.

j. Suitable access to balancing devices and equipment is provided.

3.03 GENERAL PROCEDURES FOR TESTING AND BALANCING

A. Cut insulation, ducts, pipes, and equipment casings for installation of test probes to the minimum extent necessary for TAB procedures.

1. After testing and balancing, patch probe holes in ducts with same material and thickness as used to construct ducts.

B. Mark equipment and balancing devices, including damper-control positions, valve position indicators, fan-speed-control levers, and similar controls and devices, with paint or other suitable, permanent identification material to show final settings.

3.04 GENERAL PROCEDURES FOR BALANCING AIR SYSTEMS

A. Prepare test reports for both fans and outlets. Obtain manufacturer's outlet factors and recommended testing procedures. Crosscheck the summation of required outlet volumes with required fan volumes.

B. Prepare schematic diagrams of systems' Record drawings duct layouts.

C. For variable-air-volume systems, develop a plan to simulate diversity.

D. Determine the best locations in main and branch ducts for accurate duct-airflow measurements.

E. Check airflow patterns from the outdoor-air louvers and dampers and the return- and exhaust-air dampers through the supply-fan discharge and mixing dampers.

F. Locate start-stop and disconnect switches, electrical interlocks, and motor starters.

G. Verify that motor starters are equipped with properly sized thermal protection.

H. Check dampers for proper position to achieve desired airflow path.

I. Check for airflow blockages.

J. Check condensate drains for proper connections and functioning.

K. Check for proper sealing of air-handling-unit components.

3.05 PROCEDURES FOR CONSTANT-VOLUME AIR SYSTEMS

A. Adjust fans to deliver total indicated airflows within the maximum allowable fan speed listed by fan manufacturer.

1. Measure total airflow.

a. Set outside-air, return-air, and relief-air dampers for proper position that simulates minimum outdoor-air conditions.

b. Where duct conditions allow, measure airflow by main Pitot-tube traverse. If necessary, perform multiple Pitot-tube traverses close to the fan and prior to any outlets, to obtain total airflow.

c. Where duct conditions are unsuitable for Pitot-tube traverse measurements, a coil traverse may be acceptable.

2. Measure fan static pressures as follows:

a. Measure static pressure directly at the fan outlet or through the flexible connection.

b. Measure static pressure directly at the fan inlet or through the flexible connection.

c. Measure static pressure across each component that makes up the air-handling system.

d. Report artificial loading of filters at the time static pressures are measured.

3. Review Contractor-prepared shop drawings and Record drawings to determine variations in design static pressures versus actual static pressures. Calculate actual system-effect factors. Recommend adjustments to accommodate actual conditions.

4. Do not make fan-speed adjustments that result in motor overload. Consult equipment manufacturers about fan-speed safety factors. Modulate dampers and measure fan-motor amperage to ensure that no overload occurs. Measure amperage in full-cooling, full-heating, economizer, and any other operating mode to determine the maximum required brake horsepower.

B. Adjust volume dampers for main duct, submain ducts, and major branch ducts to indicated airflows.

1. Measure airflow of submain and branch ducts.

2. Adjust submain and branch duct volume dampers for specified airflow.

3. Re-measure each submain and branch duct after all have been adjusted.

C. Adjust air inlets and outlets for each space to indicated airflows.

1. Set airflow patterns of adjustable outlets for proper distribution without drafts.

2. Measure inlets and outlets airflow.

3. Adjust each inlet and outlet for specified airflow.

4. Re-measure each inlet and outlet after they have been adjusted.

D. Verify final system conditions.

1. Re-measure and confirm that minimum outdoor, return, and relief airflows are within design. Readjust to design if necessary.

2. Re-measure and confirm that total airflow is within design.

3. Re-measure all final fan operating data, speed, volts, amps, and static profile.

4. Mark all final settings.

5. Test system in economizer mode. Verify proper operation and adjust if necessary.

6. Measure and record all operating data.

7. Record final fan-performance data.

3.06 PROCEDURES FOR DUAL-DUCT SYSTEMS

A. Adjust the dual-duct systems as follows:

1. Verify that the system static pressure sensor is located two-thirds of the distance down the duct from the fan discharge. On systems with separate hot-deck and cold-deck fans, verify the location of the sensor on each deck.

2. Verify that the system is under static pressure control.

3. Select the terminal unit that is most critical to the supply-fan airflow. Measure inlet static pressure, and adjust system static pressure control set point, so the entering static pressure for the critical terminal unit is not less than the sum of the terminal-unit manufacturer's recommended minimum inlet static pressure plus the static pressure needed to overcome terminal-unit discharge system losses.

4. Calibrate and balance each terminal unit's hot deck and cold deck for maximum and minimum design airflow as follows:

a. Adjust controls so that terminal is calling for full cooling. Some controllers require starting with minimum set point. Verify calibration procedure for specific project.

b. Measure airflow and adjust calibration factors as required for design cold-deck maximum airflow and hot-deck minimum airflow. Record calibration factors.

c. When maximum airflow is correct, balance the air outlets downstream from terminal units.

d. Adjust controls so that terminal is calling for full heating.

e. Measure airflow and adjust calibration factors as required for design cold-deck minimum airflow and hot-deck maximum airflow. Record calibration factors. If no minimum calibration is available, note any deviation from design airflow.

5. After terminals have been calibrated and balanced, test and adjust system for total airflow. Adjust fans to deliver total design airflows within the maximum allowable fan speed listed by fan manufacturer.

    a. Set outside-air, return-air, and relief-air dampers for proper position that simulates minimum outdoor-air conditions.

    b. Set terminals for maximum airflow. If system design includes diversity (cooling coil or fan), adjust terminals for maximum and minimum airflow so that connected total matches cooling coil or fan selection and simulates actual load in the building. In systems with separate hot-deck and cold-deck fans, diversity consideration applies to each individual fan.

    c. Where duct conditions allow, measure airflow by main Pitot-tube traverse. If necessary, perform multiple Pitot-tube traverses close to the fan and prior to any outlets, to obtain total airflow.

    d. Where duct conditions are unsuitable for Pitot-tube traverse measurements, a coil traverse may be acceptable.

6. Measure the fan(s) static pressures as follows:

    a. Measure static pressure directly at the fan outlet or through the flexible connection.

    b. Measure static pressure directly at the fan inlet or through the flexible connection.

    c. Measure static pressure across each component that makes up the air-handling system.

    d. Report any artificial loading of filters at the time static pressures are measured.

7. Set final return and outside airflow to the fan(s) while operating at maximum return airflow and minimum outdoor airflow.

    a. Balance the return-air ducts and inlets.

    b. Verify that all terminal units are meeting design airflow under system maximum flow.

8. Re-measure the inlet static pressure at the most critical terminal unit, and adjust the system static pressure set point to the most energy-efficient set point to maintain the optimum system static pressure. Record set point and give to controls Contractor.

9. Verify final system conditions as follows:

a. Re-measure and confirm that minimum outdoor, return, and relief airflows are within design. Readjust to match design if necessary.

b. Re-measure and confirm that total airflow is within design.

c. Re-measure final fan operating data, speed, volts, amps, and static profile.

d. Mark final settings.

e. Test system in economizer mode. Verify proper operation and adjust if necessary. Measure and record all operating data.

f. Verify tracking between supply and return fans.

10. Record final fan-performance data.

3.07 PROCEDURES FOR VARIABLE-AIR-VOLUME SYSTEMS

A. Adjust the variable-air-volume systems as follows:

1. Verify that the system static pressure sensor is located two-thirds of the distance down the duct from the fan discharge.

2. Verify that the system is under static pressure control.

3. Select the terminal unit that is most critical to the supply-fan airflow. Measure inlet static pressure, and adjust system static pressure control set point so the entering static pressure for the critical terminal unit is not less than the sum of the terminal-unit manufacturer's recommended minimum inlet static pressure plus the static pressure needed to overcome terminal-unit discharge system losses.

4. Calibrate and balance each terminal unit for maximum and minimum design airflow as follows:

a. Adjust controls so that terminal is calling for maximum airflow. Some controllers require starting with minimum airflow. Verify calibration procedure for specific project.

b. Measure airflow and adjust calibration factor as required for design maximum airflow. Record calibration factor.

c. When maximum airflow is correct, balance the air outlets downstream from terminal units.

d. Adjust controls so that terminal is calling for minimum airflow.

e. Measure airflow and adjust calibration factor as required for design minimum airflow. Record calibration factor. If no minimum calibration is

available, note any deviation from design airflow.

f. On constant volume terminals, in critical areas where room pressure is to be maintained, verify that the airflow remains constant over the full range of full cooling to full heating. Note any deviation from design airflow or room pressure.

5. After terminals have been calibrated and balanced, test and adjust system for total airflow. Adjust fans to deliver total design airflows within the maximum allowable fan speed listed by fan manufacturer.

   a. Set outside-air, return-air, and relief-air dampers for proper position that simulates minimum outdoor-air conditions.

   b. Set terminals for maximum airflow. If system design includes diversity, adjust terminals for maximum and minimum airflow, so that connected total matches fan selection and simulates actual load in the building.

   c. Where duct conditions allow, measure airflow by main Pitot-tube traverse. If necessary, perform multiple Pitot-tube traverses close to the fan and prior to any outlets, to obtain total airflow.

   d. Where duct conditions are unsuitable for Pitot-tube traverse measurements, a coil traverse may be acceptable.

6. Measure fan static pressures as follows:

   a. Measure static pressure directly at the fan outlet or through the flexible connection.

   b. Measure static pressure directly at the fan inlet or through the flexible connection.

   c. Measure static pressure across each component that makes up the air-handling system.

   d. Report any artificial loading of filters at the time static pressures are measured.

7. Set final return and outside airflow to the fan while operating at maximum return airflow and minimum outdoor airflow.

   a. Balance the return-air ducts and inlets.

   b. Verify that terminal units are meeting design airflow under system maximum flow.

8. Re-measure the inlet static pressure at the most critical terminal unit, and adjust the system static pressure set point to the most energy-efficient set point to

maintain the optimum system static pressure. Record set point and give to controls Contractor.

9. Verify final system conditions as follows:

    a. Re-measure and confirm that minimum outdoor, return, and relief airflows are within design. Readjust to match design if necessary.

    b. Re-measure and confirm that total airflow is within design.

    c. Re-measure final fan operating data, speed, volts, amps, and static profile.

    d. Mark final settings.

    e. Test system in economizer mode. Verify proper operation and adjust if necessary. Measure and record all operating data.

    f. Verify tracking between supply and return fans.

3.08 PROCEDURES FOR MULTIZONE SYSTEMS

A. Position the unit's automatic zone dampers for maximum flow through the cooling coil.

B. The procedures for multizone systems will utilize the zone balancing dampers to achieve the indicated airflow within the zone.

C. After balancing, place the unit's automatic zone dampers for maximum heating flow. Retest zone airflows and record any variances.

D. Adjust fans to deliver total indicated airflows within the maximum allowable fan speed listed by fan manufacturer.

    1. Measure total airflow.

        a. Set outside-air, return-air and relief-air dampers for proper position that simulates minimum outdoor air conditions.

        b. Where duct conditions allow, measure airflow by main Pitot-tube traverse. If necessary, perform multiple Pitot-tube traverses close to the fan and prior to any outlets, to obtain total airflow.

        c. Where duct conditions are unsuitable for Pitot-tube traverse measurements, a coil traverse may be acceptable.

    2. Measure fan static pressures as follows:

        a. Measure static pressure directly at the fan outlet or through the flexible connection.

b. Measure static pressure directly at the fan inlet or through the flexible connection.

c. Measure static pressure across each component that makes up the air-handling system.

d. Report artificial loading of filters at the time static pressures are measured.

3. Review Record drawings to determine variations in design static pressures versus actual static pressures. Calculate actual system-effect factors. Recommend adjustments to accommodate actual conditions.

E. Adjust volume dampers for main duct, submain ducts, and major branch ducts to indicated airflows.

1. Measure airflow of submain and branch ducts.

2. Adjust submain and branch duct volume dampers for specified airflow.

3. Re-measure each submain and branch duct after all have been adjusted.

F. Adjust air inlets and outlets for each space to indicated airflows.

1. Set airflow patterns of adjustable outlets for proper distribution without drafts.

2. Measure inlet and outlet airflow.

3. Adjust each inlet and outlet for specified airflow.

4. Re-measure each inlet and outlet after they have been adjusted.

G. Verify final system conditions.

1. Re-measure and confirm that minimum outdoor, return, and relief airflows are within design. Readjust to match design if necessary.

2. Re-measure and confirm that total airflow is within design.

3. Re-measure all final fan operating data, speed, volts, amps, and static profile.

4. Mark all final settings.

5. Test system in economizer mode. Verify proper operation and adjust if necessary.

6. Measure and record all operating data.

7. Record final fan-performance data.

3.09 PROCEDURES FOR AIR-COOLED CONDENSING UNITS

A. Verify proper rotation of fan(s).

B. Measure and record entering- and leaving-air temperatures.

C. Measure and record entering and leaving refrigerant pressures.

D. Measure and record operating data of compressor(s), fan(s), and motors.

3.10 PROCEDURES FOR AIR-COOLED CONDENSERS

A. Verify proper rotation of fan(s).

B. Measure and record entering- and leaving-air temperatures.

C. Measure and record entering and leaving refrigerant pressures.

D. Measure and record operating data of fan(s) and motor(s).

3.11 PROCEDURES FOR EXHAUST HOODS

A. Room Pressure: Measure and record room pressure with respect to atmosphere and adjacent space with hoods in room initially not operating and then with hoods operating.

B. Makeup Air: Systems supplying source of makeup air to hoods shall be in operation during testing and balancing of exhaust hoods.

1. Measure and record temperature of makeup air entering hood. If hood makeup air is from multiple sources having different temperatures, measure and record the airflow and temperatures of each source and calculate the weighted average temperature.

2. Use simulated smoke to observe supply air-distribution air patterns in vicinity of hoods. Consult with hood manufacturer and report conditions that have a detrimental effect on intended capture, containment, and other attributes effecting proper operation.

C. Rooms with Multiple Hoods: Test each hood separately, one at a time, and repeat tests with all hoods intended to operate simultaneously by design.

D. Canopy Hoods: Measure and record the following:

1. Pressure drop across hood.

2. Airflow by duct traverse where duct distribution will allow accurate measurement, and calculate hood average face velocity.

3. Measure velocity across hood face and calculate hood airflow.

   a. Clearly indicate the direction of flow at each point of measurement.

4. Capture and Containment: Check each hood for proper capture and containment using a smoke-emitting device. Observe and report performance. Make adjustments to achieve optimum results.

3.12 VIBRATION TESTS

A. After systems are balanced and Substantially Completion, measure and record vibration levels on equipment having motor horsepower equal to or greater than 10.

B. Instrumentation:

1. Use portable, battery-operated, and microprocessor-controlled vibration meter with or without a built-in printer.

2. The meter shall automatically identify engineering units, filter bandwidth, amplitude, and frequency scale values.

3. The meter shall be able to measure machine vibration displacement in mils of deflection, velocity in inches per second, and acceleration in inches per second squared.

4. Verify calibration date is current for vibration meter before taking readings.

C. Test Procedures:

1. To ensure accurate readings, verify that accelerometer has a clean, flat surface and is mounted properly.

2. With the unit running, set up vibration meter in a safe, secure location. Connect transducer to meter with proper cables. Hold magnetic tip of transducer on top of the bearing, and measure unit in mils of deflection. Record measurement, then move transducer to the side of the bearing and record in mils of deflection. Record an axial reading in mils of deflection by holding nonmagnetic, pointed transducer tip on end of shaft.

3. Change vibration meter to velocity (inches per second) measurements. Repeat and record above measurements.

4. Record CPM or rpm.

5. Read each bearing on motor, fan, and pump as required. Track and record vibration levels from rotating component through casing to base.

D. Reporting:

1. Report shall record location and the system tested.

2. Include horizontal-vertical-axial measurements for tests.

3. Verify that vibration limits follow Specifications, or, if not specified, follow the General Machinery Vibration Severity Chart or Vibration Acceleration General Severity Chart from AABC's "National Standards for Total System Balance." Acceptable levels of vibration are normally "smooth" to "good."

4. Include in General Machinery Vibration Severity Chart, with conditions plotted.

3.13 DUCT LEAKAGE TESTS

A. Witness the duct leakage testing performed by Installer.

B. Verify that proper test methods are used and that leakage rates are within specified limits.

C. Report deficiencies observed.

3.14 PIPE LEAKAGE TESTS

A. Witness the pipe pressure testing performed by Installer.

B. Verify that proper test methods are used and that leakage rates are within specified limits.

C. Report deficiencies observed.

3.15 HVAC CONTROLS VERIFICATION

A. In conjunction with system balancing, perform the following:

1. Verify HVAC control system is operating within the design limitations.

2. Confirm that the sequences of operation are in compliance with Contract Documents.

3. Verify that controllers are calibrated and function as intended.

4. Verify that controller set points are as indicated.

5. Verify the operation of lockout or interlock systems.

6. Verify the operation of valve and damper actuators.

7. Verify that controlled devices are properly installed and connected to correct controller.

8. Verify that controlled devices travel freely and are in position indicated by controller: open, closed, or modulating.

9. Verify location and installation of sensors to ensure that they sense only intended temperature, humidity, or pressure.

B. Reporting: Include a summary of verifications performed, remaining deficiencies, and variations from indicated conditions.

3.16 PROCEDURES FOR TESTING, ADJUSTING, AND BALANCING EXISTING SYSTEMS

A. Perform a preconstruction inspection of existing equipment that is to remain and be reused.

1. Measure and record the operating speed, airflow, and static pressure of each fan and equipment with fan(s).

2. Measure motor voltage and amperage. Compare the values to motor nameplate information.

3. Check the refrigerant charge.

4. Check the condition of filters.

5. Check the condition of coils.

6. Check the operation of the drain pan and condensate-drain trap.

7. Check bearings and other lubricated parts for proper lubrication.

8. Report on the operating condition of the equipment and the results of the measurements taken. Report deficiencies.

B. TAB After Construction: Before performing testing and balancing of renovated existing systems, inspect existing equipment that is to remain and be reused to verify that existing equipment has been cleaned and refurbished in accordance with renovation scope indicated by Contract Documents. Verify the following:

1. New filters are installed.

2. Coils are clean and fins combed.

3. Drain pans are clean.

4. Fans are clean.

5. Bearings and other parts are properly lubricated.

6. Deficiencies noted in the preconstruction report are corrected.

C. Perform testing and balancing of existing systems to the extent that existing systems are affected by the renovation work.

1. Compare the indicated airflow of the renovated work to the measured fan airflows, and determine the new fan speed and the face velocity of filters and coils.

2. Verify that the indicated airflows of the renovated work result in filter and coil face velocities and fan speeds that are within the acceptable limits defined by equipment manufacturer.

3. Balance each air outlet.

3.17 FINAL REPORT

A. General: Prepare a certified written report; tabulate and divide the report into separate sections for tested systems and balanced systems.

1. Include a certification sheet at the front of the report's binder, signed and sealed by the certified testing and balancing engineer.

2. Include a list of instruments used for procedures, along with proof of calibration.

3. Certify validity and accuracy of field data.

B. Final Report Contents: In addition to certified field-report data, include the following:

1. Pump curves.

2. Fan curves.

3. Manufacturers' test data.

4. Field test reports prepared by system and equipment installers.

5. Other information relative to equipment performance; do not include Shop Drawings and Product Data.

C. General Report Data: In addition to form titles and entries, include the following data:

1. Title page.

2. Name and address of the TAB specialist.

3. Project name.

4. Project location.

5. Architect's name and address.

6. Engineer's name and address.

7. Contractor's name and address.

8. Report date.

9. Signature of TAB supervisor who certifies the report.

10. Table of Contents with the total number of pages defined for each section of the report. Number each page in the report.

11. Summary of contents, including the following:

    a. Indicated versus final performance.

    b. Notable characteristics of systems.

    c. Description of system operation sequence if it varies from the Contract Documents.

12. Nomenclature sheets for each item of equipment.

13. Data for terminal units, including manufacturer's name, type, size, and fittings.

14. Notes to explain why certain final data in the body of reports vary from indicated values.

15. Test conditions for fans performance forms, including the following:

    a. Settings for outdoor-, return-, and exhaust-air dampers.

    b. Conditions of filters.

    c. Cooling coil, wet- and dry-bulb conditions.

    d. Heating coil, dry-bulb conditions.

e. Face and bypass damper settings at coils.

f. Fan drive settings, including settings and percentage of maximum pitch diameter.

g. Settings for pressure controller(s).

h. Other system operating conditions that affect performance.

16. Test conditions for pump performance forms, including the following:

a. Settings for pressure controller(s).

b. Other system operating conditions that affect performance.

D. System Diagrams: Include schematic layouts of air distribution systems. Present each system with single-line diagram and include the following:

1. Quantities of outdoor, supply, return, and exhaust airflows.

2. Water and steam flow rates.

3. Duct, outlet, and inlet sizes.

4. Pipe and valve sizes and locations.

5. Terminal units.

6. Balancing stations.

7. Position of balancing devices.

END OF SECTION

SECTION 23 08 00

COMMISSIONING OF HVAC

PART 1 - GENERAL

1.01 RELATED DOCUMENTS

A. Drawings and general provisions of the Contract, including General and Supplementary Conditions and other Division 01 Specification Sections, apply to this Section.

1.02 SUMMARY

A. Section includes Cx process requirements for the following HVAC systems, assemblies, and equipment:

1. Heating and cooling terminal and unitary equipment.

2. HVAC controls.

3. TAB verification.

B. Related Requirements:

1. For construction checklists, comply with requirements in various Division 23 Sections specifying HVAC systems, system components, equipment, and products.

1.03 DEFINITIONS

A. BAS: Building automation system.

B. Cx: Commissioning

C. CxA: Commissioning Authority

D. "Systems," "Assemblies," "Subsystems," "Equipment," and "Components": Where these terms are used together or separately, they mean "as-built" systems, assemblies, subsystems, equipment, and components.

E. TAB: Testing, adjusting, and balancing.

1.04 INFORMATIONAL SUBMITTALS

A. Qualification Data: For BAS and HVAC testing technician.

B. Construction Checklists:

1. Draft Cx plan, including draft construction checklists to be prepared by CxA under Section 01 91 13 "General Commissioning Requirements." Div. 23 Subcontractor is to review Construction Checklist in accordance with requirements in ASHRAE 202 and to resolve any issues with the CxA.

2. Cx plan, including material, installation, and performance construction checklists for systems, assemblies, subsystems, equipment, and components relating to BAS and HVAC to be part of the Cx process and in accordance with requirements in ASHRAE 202."

C. Test Equipment and Instruments: For all test equipment and instruments to be used in conducting Cx tests by Div. 23 Subcontractor, provide the following:

1. Equipment/instrument identification number.

2. Planned Cx application or use.

3. Manufacturer, make, model, and serial number.

4. Calibration history, including certificates from agencies that calibrate the equipment and instrumentation.

5. Equipment manufacturers' proprietary instrumentation and tools. For each instrument or tool, identify the following:

a. Instrument or tool identification number.

b. Equipment schedule designation of equipment for which the instrument or tool is required.

c. Manufacturer, make, model, and serial number.

d. Calibration history, including certificates from agencies that calibrate the instrument or tool, where appropriate.

1.05 QUALITY ASSURANCE

A. BAS Testing Technician Qualifications: Technicians performing BAS Construction Checklist verification tests, Construction Checklist verification test demonstrations, Cx tests, and Cx test demonstrations are to have the following minimum qualifications:

1. Journey level or equivalent skill level with knowledge of BAS, HVAC, electrical concepts, and building operations.

2. Minimum three years experience installing, servicing, and operating systems manufactured by approved manufacturer.

3. International Society of Automation (ISA)-Certified Control Systems Technician (CCST) Level I.

B. HVAC Testing Technician Qualifications: Technicians to perform HVAC Construction Checklist verification tests, Construction Checklist verification test demonstrations, Cx tests, and Cx test demonstrations shall have the following minimum qualifications:

1. Journey level or equivalent skill level; vocational school four-year-program graduate or an Associate's degree in mechanical systems, air conditioning, or similar field. Degree may be offset by three years' experience in servicing mechanical systems in the HVAC industry. Generally, required knowledge includes HVAC systems, electrical concepts, building operations, and application and use of tools and instrumentation to measure performance of HVAC equipment, assemblies, and systems.

2. Minimum three years experience that is to include installing, servicing, and operating systems manufactured by approved manufacturer.

C. Testing Equipment and Instrumentation Quality and Calibration:

1. Capable of testing and measuring performance within the specified acceptance criteria.

2. Be calibrated at manufacturer's recommended intervals with current calibration tags permanently affixed to the instrument being used.

3. Be maintained in good repair and operating condition throughout duration of use on Project.

4. Be recalibrated/repaired if dropped or damaged in any way since last calibrated.

D. Proprietary Test Instrumentation and Tools:

1. Equipment Manufacturer's Proprietary Instrumentation and Tools: For installed equipment included in the Cx process, test instrumentation and tools manufactured or prescribed by equipment manufacturer to service, calibrate, adjust, repair, or otherwise work on its equipment or required as a condition of equipment warranty, shall comply with the following:

a. Be calibrated by manufacturer with current calibration tags permanently affixed.

b. Include a separate list of proprietary test instrumentation and tools in operation and maintenance manuals.

2. HVAC proprietary test instrumentation and tools become property of Owner at the time of Substantial Completion.

PART 2 - PRODUCTS (Not Used)

PART 3 - EXECUTION

3.01 CONSTRUCTION CHECKLISTS

A. Preliminary detailed construction checklists are to be prepared for each BAS and HVAC system, assembly, subsystem, equipment, and component required to be commissioned, as detailed in ASHRAE 202. Contractor performs the following:

1. Review BAS and HVAC preliminary construction checklists and provide written comments on checklist items where appropriate.

2. Return preliminary Construction Checklist with review comments within 10 days of receipt.

3. When review comments have been resolved, the CxA will provide final construction checklists marked "Approved for Use, (date)."

4. Use only construction checklists marked "Approved for Use, (date)" When performing tests. Mark construction checklists in the appropriate place as indicated Project events are completed, and provide pertinent details and other information.

B. Prepare preliminary detailed construction checklists for each BAS and HVAC system, assembly, subsystem, equipment, and component required to be commissioned, as detailed in ASHRAE 202.

1. Submit preliminary construction checklists to CxA and Designer for review.

2. When review comments have been resolved, the CxA will provide final construction checklists marked "Approved for Use, (date)."

3. Use only construction checklists, marked "Approved for Use, (date)" when performing tests. Mark construction checklists in the appropriate place, as indicated Project events are completed and provide pertinent details and other information.

C. Systems required to be commissioned under IgCC:

1. Heating, ventilating, air-conditioning, and refrigeration systems (mechanical and/or passive) and associated controls.

2. Air-curtain systems.

3. Water-pumping and -mixing systems over 5 hp and purification systems.

4. Renewable energy systems and energy storage systems.

5. Energy and building management and demand-control systems.

6. Air-handling systems, including the following:

    a. Supply, return, and exhaust air fans, motors, and drives.

    b. Automatic and gravity dampers.

    c. Heating and cooling devices.

    d. Humidification and dehumidification devices.

    e. Air filters.

    f. Hangers and supports.

    g. Interlock between air-handling system and fire/smoke alarm system.

7. Air duct systems, including the following:

    a. Duct systems.

    b. Air-duct accessories, including volume dampers, fire and smoke dampers, turning vanes, sound attenuators, and flexible connectors.

    c. Duct-mounted access doors and panels.

    d. Hangers and supports.

8. Heating and cooling terminal and unitary equipment, including the following:

    a. Unitary heating and cooling equipment.

9. Vibration isolation systems.

10. Controls and instrumentation, including the following:

    a. Energy monitoring and recording system.

b. Controllers and sensors.

c. Automatic control valves, dampers, and actuators.

d. Control interface with fans, pumps, dampers, and other equipment and systems.

e. Demand-control systems.

11. TAB Verification:

a. Airflow.

b. Water flow.

c. Space pressurization.

12. Documentation:

a. Mechanical systems manuals.

b. Documentation of required commissioning.

13. Mechanical insulation, including the following:

a. Duct and plenum insulation.

b. HVAC piping insulation.

3.02 Cx TESTING PREPARATION

A. Certify that HVAC systems, subsystems, and equipment have been installed, calibrated, and started and that they are operating in accordance with the Contract Documents and approved submittals.

B. Certify that HVAC instrumentation and control systems have been completed and calibrated, point-to-point checkout has been successfully completed, and systems are operating in accordance with their design sequence of operation, Contract Documents, and approved submittals. Certify that all sensors are operating within specified accuracy and all systems are set to and maintaining set points as required by the design documents.

C. Certify that TAB procedures have been completed and that TAB reports have been submitted, discrepancies corrected, and corrective work approved.

D. Set systems, subsystems, and equipment into operating mode to be tested in accordance with approved test procedures (e.g., normal shutdown, normal auto position, normal manual position, unoccupied cycle, emergency power, and alarm conditions).

3.03 Cx TEST CONDITIONS

A. Perform tests using design conditions, whenever possible.

1. Simulated conditions may, with approval of Architect, be imposed using an artificial load when it is impractical to test under design conditions. Before simulating conditions, calibrate testing instruments. Provide equipment to simulate loads. Set simulated conditions as directed by CxA, and document simulated conditions and methods of simulation. After tests, return configurations and settings to normal operating conditions.

2. Cx test procedures may direct that set points be altered when simulating conditions is impractical.

3. Cx test procedures may direct that sensor values be altered with a signal generator when design or simulating conditions and altering set points are impractical.

B. If tests cannot be completed because of a deficiency outside the scope of the HVAC system, document the deficiency and report it to Architect. After deficiencies are resolved, reschedule tests.

C. If seasonal testing is specified, complete appropriate initial performance tests and documentation, and schedule seasonal tests.

3.04 Cx TESTS COMMON TO HVAC SYSTEMS

A. Measure capacities and effectiveness of systems, assemblies, subsystems, equipment, and components, including operational and control functions, to verify compliance with acceptance criteria.

B. Test systems, assemblies, subsystems, equipment, and components for operating modes, interlocks, control responses, responses to abnormal or emergency conditions, and response in accordance with acceptance criteria.

C. Coordinate schedule with, and perform Cx activities at the direction of, CxA.

D. Comply with Construction Checklist requirements, including material verification, installation checks, startup, and performance test requirements specified in Division 23 Sections specifying HVAC systems and equipment.

E. Provide technicians, instrumentation, tools, and equipment to perform and document the following:

1. Cx Construction Checklist verification tests.

2. Cx Construction Checklist verification test demonstrations.

END OF SECTION

SECTION 23 34 00

HVAC FANS

PART 1 - GENERAL

1.01 RELATED DOCUMENTS

A. Drawings and general provisions of the Contract, including General and Supplementary Conditions and Division 1 Specification Sections, apply to this Section.

B. Section 23 00 00 – General HVAC Requirements

1.02 REFERENCES

A. General

1. ABMA 9-90 – Load Ratings and Fatigue Life for Ball Bearings

2. AMCA 99-98 - Standards Handbook

3. AMCA 210-99 - Laboratory Methods of Testing Fans for Aerodynamic Performance Rating (ANSI)

4. AMCA 300-96 – Reverberant Room Method for Sound Testing of Fans

5. AMCA 301-90 – Methods for Calculating Fan Sound Ratings from Laboratory Test Data

6. NFPA 70-02 – National Electrical Code

7. UL 705-99 - Power Ventilators

B. Kitchen Hood Fans

1. NFPA 96 - Installation of Equipment for the Removal of Smoke and Grease Vapors from Commercial cooking Equipment

2. UL 762 - Restaurant Exhaust Ventilators

1.03 SUBMITTALS

A. General

1. Product Data: Include rated capacities, furnished specialties, and accessories for each type of product indicated and include the following:

    a. Certified fan performance curves with system operating conditions indicated.

    b. Certified fan sound-power ratings.

    c. Motor ratings and electrical characteristics, plus motor and electrical accessories.

    d. Material thickness and finishes, including color charts.

    e. Dampers, including housings, linkages, and operators.

    f. Roof curbs.

    g. Fan speed controllers.

2. Shop Drawings: Detail equipment assemblies and indicate dimensions, weights, loads, required clearances, method of field assembly, components, and location and size of each field connection.

    a. Wiring Diagrams: Power, signal, and control wiring.

    b. Design Calculations: Calculate requirements for selecting vibration isolators and seismic restraints and for designing vibration isolation bases.

    c. Vibration Isolation Base Details: Detail fabrication, including anchorages and attachments to structure and to supported equipment. Include auxiliary motor slides and rails, and base weights.

1.04 OPERATION AND MAINTENANCE MATERIALS

A. General: Product data for specified items.

1.05 QUALITY ASSURANCE

A. General

1. Electrical Components, Devices, and Accessories: Listed and labeled as defined in NFPA 70, Article 100, by a testing agency acceptable to authorities having jurisdiction, and marked for intended use.

2. AMCA Compliance: Products shall comply with performance requirements and shall be licensed to use the AMCA-Certified Ratings Seal.

3. NEMA Compliance: Motors and electrical accessories shall comply with NEMA standards.

4. UL Standard: Power ventilators shall comply with UL 705.

B. Kitchen Hood Fans

1. UL Standard: Power ventilator serving kitchen hoods shall comply with UL 762.

1.06 COORDINATION

A. Coordinate size and location of structural-steel support members.

B. Coordinate size and location of concrete bases. Cast anchor-bolt inserts into bases. Concrete, reinforcement, and formwork requirements are specified in Division 3.

C. Coordinate installation of roof curbs, equipment supports, and roof penetrations.

1.07 DELIVERY, STORAGE, AND HANDLING

A. Deliver fans as factory-assembled unit, to the extent allowable by shipping limitations, with protective crating and covering.

B. Disassemble and reassemble units, as required for moving to final location, according to manufacturer's written instructions.

C. Lift and support units with manufacturer's designated lifting or supporting points.

1.08 EXTRA MATERIALS

A. Furnish extra materials described below that match products installed and that are packaged with protective covering for storage and identified with labels describing contents.

1. Belts: One set(s) for each belt-driven unit.

1.09 DRAWING SCHEDULES

A. Refer to equipment schedules on drawings for additional information.

PART 2 - PRODUCTS

2.01 GENERAL

A. Manufacturers

1. Acme
2. Briedert
3. Cook
4. Greenheck
5. Penn Ventilation
6. Or approved equal

B. Fans shall be statically and dynamically balanced.

C. Consult drawings for sizes, model numbers, capacities, electrical characteristics, and accessories.

D. All mechanical equipment shall have an AIC rating of 100,000 or otherwise specified on electrical one-line diagrams fault current for each piece of equipment.

2.02 ROOF EXHAUSTERS (BELT DRIVE)

A. Construction: Heavy gauge spun aluminum housing and hood; rigid internal support structure; aluminum base with continuously welded curb cap corners; integral conduit chase through the curb cap and into the motor compartment to facilitate wiring connections; open drip-proof motor enclosure; motor and drive assembly shall be in a weathertight compartment and shall be mounted on vibration isolators located outside of the air stream.

B. Wheel: Centrifugal, backward inclined, aluminum fan wheel; precision cast aluminum hub; aerodynamic aluminum inlet cone designed to provide maximum performance and efficiency.

C. Bearings: Permanently lubricated and sealed, or regreasable heavy duty pillow block type; minimum L-50 life in excess of 200,000 hours at maximum catalogued operating speed.

D. Belts and Drives: Oil and heat resistant, non-static type belts; precision ground drive securely keyed to the wheel and motor shafts; drives shall be sized for 150 % of the installed motor horsepower; cast iron, multi-belt sheaves - adjustable for motors up to 5 HP and fixed for motors in excess of 5 HP.

E. Roof Curb: Galvanized steel construction; 1½ inch thick 3 pound density insulation; continuously welded corners; wood nailer; 14 inch height unless specified otherwise on the drawings; suitable for roof construction and slope.

F. Motorized Backdraft Damper: Extruded aluminum construction; brass bushings; see drawings for motor voltage; voltage shall be verified with 230900 and Division 26 prior to ordering.

2.03 ROOF EXHAUSTERS (DIRECT DRIVE)

A. Construction: Heavy gauge spun aluminum housing and hood; rigid internal support structure; aluminum base with continuously welded curb cap corners; integral conduit chase through the curb cap and into the motor compartment to facilitate wiring connections; open drip-proof motor enclosure; motor shall be enclosed in a weather-tight compartment and shall be separated from the airstream.

B. Wheel: Centrifugal, backward inclined, aluminum fan wheel; precision cast aluminum hub; aerodynamic aluminum inlet cone designed to provide maximum performance and efficiency.

C. Roof Curb: Galvanized steel construction; 1½ inch thick 3 pound density insulation; continuously welded corners; wood nailer; 14 inch height unless specified otherwise on the drawings; suitable for roof construction and slope.

D. Motorized Backdraft Damper: Extruded aluminum construction; brass bushings; see drawings for motor voltage; voltage shall be verified with DIV 26 prior to ordering.

2.04 UTILITY SET FAN

A. Construction: Heavy gauge galvanized steel casing; lock-formed or fully-welded seams permitting no air leakage; field-rotatable housing to any of the eight (8) standard discharge positions; heavy gauge galvanized steel housing supports and members to prevent vibration and rigidly support the motor and wheel; enamel or epoxy finish unless indicated otherwise on the drawings; drain connection when called for on the drawings;. Fan shall be class I, II, or III as required for operating conditions. Motor location, fan rotation, and fan discharge shall be as indicated on the drawings.

B. Wheel: Centrifugal, backward inclined, non-overloading, aluminum fan wheel; precision cast aluminum hub; aerodynamic aluminum inlet cone designed to provide maximum performance and efficiency; aluminum blades securely welded to hub and shroud.

C. Bearings: Permanently lubricated and sealed, or regreasable heavy duty pillow block type; minimum L-50 life in excess of 200,000 hours at maximum catalogued operating speed.

D. Belts and Drives: Oil and heat resitant, non-static type belts; precision ground drive securely keyed to the wheel and motor shafts; drives shall be sized for 150 % of the installed motor horsepower; cast iron, multi-belt sheaves - adjustable for motors up to 5 Hp and fixed for motors in excess of 5 Hp.

E. Motor Cover/Belt Guard: Galvanized steel construction; adequate for protection of motors, drives, and personnel. Weather hoods shall be provided for fans located outside.

F. Safety Screens: Galvanized mesh safety screens provided on inlet and outlet. Screens shall be easily removable for maintenance and inspection.

G. Vibration Isolation: Base-mounted spring and neoprene isolators consisting of a steel spring in series with a neoprene isolation element; sized to match each fan.

PART 3 - EXECUTION

3.01 INSTALLATION

A. Install power ventilators level and plumb.

B. Support units using restrained spring isolators having a static deflection of 1 inch. Vibration- and seismic-control devices are specified in Division 23 Section "HVAC Vibration and Seismic Controls."

1. Secure vibration and seismic controls to concrete bases using anchor bolts cast in concrete base.

C. Ceiling Units: Suspend units from structure; use steel wire or metal straps. Use stainless steel materials in the production area of the Food Factory Expansion.

D. Install units with clearances for service and maintenance.

E. Label units according to requirements specified in Division 23 Section "HVAC Identification."

3.02 CONNECTIONS

A. Duct installation and connection requirements are specified in other Division 23 Sections. Drawings indicate general arrangement of ducts and duct accessories. Make final duct connections with flexible connectors.

B. Install ducts adjacent to power ventilators to allow service and maintenance.

3.03 FIELD QUALITY CONTROL

A. Perform the following field tests and inspections and prepare test reports:

1. Verify that shipping, blocking, and bracing are removed.

2. Verify that unit is secure on mountings and supporting devices and that connections to ducts and electrical components are complete. Verify that proper thermal-overload protection is installed in motors, starters, and disconnect switches.

3. Verify that cleaning and adjusting are complete.

4. Disconnect fan drive from motor, verify proper motor rotation direction, and verify fan wheel free rotation and smooth bearing operation. Reconnect fan drive system, align and adjust belts, and install belt guards.

5. Adjust belt tension.

6. Adjust damper linkages for proper damper operation.

7. Verify lubrication for bearings and other moving parts.

8. Verify that manual and automatic volume control and fire and smoke dampers in connected ductwork systems are in fully open position.

9. Disable automatic temperature-control operators, energize motor and adjust fan to indicated rpm, and measure and record motor voltage and amperage.

10. Shut unit down and reconnect automatic temperature-control operators.

11. Remove and replace malfunctioning units and retest as specified above.

B. Test and adjust controls and safeties. Replace damaged and malfunctioning controls and equipment.

C. Adjusting

D. Adjust damper linkages for proper damper operation.

E. Adjust belt tension.

F. Refer to Division 23 Section "HVAC Testing, Adjusting, and Balancing" for testing, adjusting, and balancing procedures.

G. Replace fan and motor pulleys as required to achieve design airflow.

H. Lubricate bearings.

END OF SECTION

SECTION 23 74 16.13

PACKAGED, LARGE CAPACITY, ROOFTOP AIR CONDITIONING UNITS

PART 1 - GENERAL

1.01 RELATED DOCUMENTS

A. Drawings and general provisions of the Contract, including General and Supplementary Conditions and Division 01 Specification Sections, apply to this Section.

1.02 SUMMARY

A. Section includes packaged, large-capacity, rooftop air conditioning units (RTUs) with the following components and accessories:

1. Casings.
2. Fans.
3. Motors.
4. Coils.
5. Refrigerant circuit components.
6. Air filtration.
7. Supported bag filters.
8. UV germicidal irradiation section.
9. Sound-attenuator section.
10. Dampers.
11. Electrical power connections.
12. Controls.
13. Accessories

14. Roof curbs.

1.03 DEFINITIONS

A. DDC: Direct-digital controls.

B. ECM: Electronically commutated motor.

C. Outdoor-Air Refrigerant Coil: Refrigerant coil in the outdoor-air stream to reject heat during cooling operations and to absorb heat during heating operations. "Outdoor air" is defined as the air outside the building or taken from outdoors and not previously circulated through the system.

D. RTU: Rooftop unit. As used in this Section, this abbreviation means packaged, large-capacity, rooftop air-conditioning units. This abbreviation is used regardless of whether the unit is mounted on the roof or on a concrete base on ground.

E. Supply-Air Fan: The fan providing supply air to conditioned space. "Supply air" is defined as the air entering a space from air-conditioning, heating, or ventilating apparatus.

F. Supply-Air Refrigerant Coil: Refrigerant coil in the supply-air stream to absorb heat (provide cooling) during cooling operations and to reject heat (provide heating) during heating operations. "Supply air" is defined as the air entering a space from air-conditioning, heating, or ventilating apparatus.

1.04 ACTION SUBMITTALS

A. Product Data: Include manufacturer's technical data for each RTU, including rated capacities, dimensions, required clearances, characteristics, furnished specialties, and accessories.

1. Factory selection calculations for each antimicrobial ultraviolet lamp installation.

B. Sustainable Design Submittals:

1. Product Data: For adhesives, mastics, and sealants, indicating VOC content.

2. Laboratory Test Reports: For adhesives, mastics, and sealants, indicating compliance with requirements for low-emitting materials.

3. Product Data: For energy performance.

C. Shop Drawings:

1. Include details of equipment assemblies. Indicate dimensions, weights, loads, required clearances, method of field assembly, components, and location and size of each field connection.

2. Include diagrams for power, signal, and control wiring.

D. Submittal: For RTU supports indicated to comply with performance requirements and design criteria, including analysis data signed and sealed by the qualified professional engineer responsible for their preparation.

1. Design Calculations: Calculate requirements for selecting vibration isolators and seismic restraints and for designing vibration isolation bases.

2. Detail mounting, securing, and flashing of roof curb to roof structure. Indicate coordinating requirements with roof membrane system.

3. **Wind and Seismic** Restraint Details: Detail fabrication and attachment of wind and seismic restraints and snubbers. Show anchorage details and indicate quantity, diameter, and depth of penetration of anchors.

1.05 INFORMATIONAL SUBMITTALS

A. Coordination Drawings: Plans and other details, drawn to scale, on which the following items are shown and coordinated with each other, using input from installers of the items involved:

1. Structural members to which RTUs will be attached.

2. Roof openings.

3. Roof curbs and flashing.

B. Product Certificates: Submit certification that specified equipment will withstand wind forces identified in "Performance Requirements" Article and in Section 23 05 48 "Vibration and Seismic Controls for HVAC."

1. Basis for Certification: Indicate whether withstand certification is based on actual test of assembled components or on calculations.

2. Dimensioned Outline Drawings of Equipment Unit: Identify center of wind force and locate and describe mounting and anchorage provisions.

3. Detailed description of equipment anchorage devices on which the certification is based and their installation requirements.

C. Seismic Qualification Data: Certificates, for RTUs, accessories, and components, from manufacturer.

1. Basis for Certification: Indicate whether withstand certification is based on actual test of assembled components or on calculation.

2. Dimensioned Outline Drawings of Equipment Unit: Identify center of gravity and locate and describe mounting and anchorage provisions.

3. Detailed description of equipment anchorage devices on which the certification is based and their installation requirements.

4. Restraint of internal components, including fans, coils, and refrigeration components.

D. Field quality-control reports.

E. Sample Warranty: For special warranty.

1.06 CLOSEOUT SUBMITTALS

A. Operation and Maintenance Data: For RTUs to include in emergency, operation, and maintenance manuals.

1.07 MAINTENANCE MATERIAL SUBMITTALS

A. Furnish extra materials described below that match products installed and that are packaged with protective covering for storage and identified with labels describing contents.

1. Fan Belts: One set(s) for each belt-driven fan.

2. Filters: Oneset(s) of filters for each unit.

1.08 WARRANTY

A. Special Warranty: Manufacturer agrees to repair or replace components of RTUs that fail in materials or workmanship within specified warranty period.

1. Warranty Period for Compressors: Manufacturer's standard, but not less than fiveyears from date of Substantial Completion.

2. Warranty Period for Solid-State Ignition Modules: Manufacturer's standard, but not less than three years from date of Substantial Completion.

3. Warranty Period for Control Boards: Manufacturer's standard, but not less than threeyears from date of Substantial Completion.

4. Warranty Period for Antimicrobial Ultraviolet Lamp System: Lifetime with exception of lamps.

PART 2 - PRODUCTS

2.01 SYSTEM DESCRIPTION

A. AHRI Compliance:

1. Comply with AHRI 340/360 for testing and rating energy efficiencies for RTUs.

2. Comply with AHRI 270 for testing and rating sound performance for RTUs.

3. Comply with AHRI 1060 for testing and rating performance for air-to-air exchanger.

4. Comply with AHRI 210/240 for testing and rating energy efficiencies for RTUs.

B. AMCA Compliance:

1. Comply with AMCA 11 and bear the AMCA-Certified Ratings Seal for air and sound performance according to AMCA 211 and AMCA 311.

2. Damper leakage tested in accordance with AMCA 500-D.

3. Operating Limits: Classify according to AMCA 99.

C. ASHRAE Compliance:

1. Comply with ASHRAE 15 for refrigeration system safety.

2. Comply with ASHRAE 33 for methods of testing cooling and heating coils.

3. Comply with applicable requirements in ASHRAE 62.1, Section 5 - "Systems and Equipment" and Section 7 - "Construction and Startup."

D. ASHRAE/IES 90.1 Compliance: Applicable requirements in ASHRAE/IES 90.1, Section 6 - "Heating, Ventilating, and Air-Conditioning."

E. NFPA Compliance: Comply with NFPA 90A or NFPA 90B.

F. UL Compliance: Comply with UL 1995.

G. Electrical Components, Devices, and Accessories: Listed and labeled as defined in NFPA 70, by a qualified testing agency, and marked for intended location and application.

2.02 MANUFACTURERS

A. Manufacturers: Subject to compliance with requirements, provide products by one of the following:

1. AAON.

2. Allied Commercial.

3. Carrier Corporation; a unit of United Technologies Corp.

4. Daikin Applied.

5. Trane.

6. YORK; a Johnson Controls company.

7. Or approved equal.

2.03 PERFORMANCE REQUIREMENTS

A. Engage a qualified professional engineer, as defined in Section 01 40 00 "Quality Requirements," to design mounting and restraints for RTUs, including comprehensive engineering analysis.

1. Design RTU supports to comply with **wind and seismic** performance requirements.

B. Wind-Restraint Performance:

1. Obtain values for items in subparagraphs below from Project structural engineer or from ASCE 7.

2. Minimum 10 lb/sq. ft. multiplied by the maximum area of the mechanical component projected on a vertical plane that is normal to the wind direction, and 45 degrees either side of normal.

C. Seismic Performance: RTUs shall withstand the effects of earthquake motions determined according **to ASCE 7.**

1. The term "withstand" means "the unit will remain in place without separation of any parts when subjected to the seismic forces specified"and the unit will be fully operational after the seismic event.

2.04 UNIT CASINGS

A. General Fabrication Requirements for Casings: Formed and reinforced double-wall insulated panels, fabricated to allow removal for access to internal parts and components, with joints between sections sealed.

B. Double-Wall Construction:

1. Outside Casing Wall: Galvanized steel, minimum 18 gauge thick with manufacturer's standard finish, with pitched roof panels and knockouts with grommet seals for electrical and piping connections and lifting lugs.

2. Inside Casing Wall: G90-coated galvanized steel, 0.034 inch thick, perforated 40 percent free area.

3. Floor Plate: G90 galvanized steel, treadplate, minimum 18 gauge thick.

4. Casing Insulation:
   a. Materials: Injected polyurethane foam insulation.
   b. Casing Panel R-Value: Minimum R-13
   c. Insulation Thickness: 1 inch.
   d. Thermal Break: Provide continuity of insulation with no through-casing metal in casing walls, floors, or roof of unit.

C. Corrosion-Resistant Coating: Apply a corrosion-resistant coating capable of withstanding a **3,000** hour salt-spray test according to ASTM B 117.

1. Standards:

   a. ASTM B-117 for salt spray.

   b. ASTM D-2794 for minimum impact resistance of 100 in-lb

   c. ASTM B-3359 for cross-hatch adhesion of 5B.

2. Application: Immersion] or Spray.

3. Thickness: 1 mil

4. Gloss: Minimum of 50 gloss units on a single-angle, 60-degree meter.

5. UV Protection: Spray-applied topcoat.

D. Casing Insulation and Adhesive: Comply with NFPA 90A or NFPA 90B.

1. Materials: ASTM C 1071, Type I.

2. Thickness: 1/2 inch .

3. Liner materials shall have air-stream surface coated with an erosion- and temperature-resistant coating or faced with a plain or coated fibrous mat or fabric.

4. Liner Adhesive: Comply with ASTM C 916, Type I.

E. Static-Pressure Classifications:

1. For Unit Sections Upstream of Fans: Minus 2-inch wg

2. For Unit Sections Downstream and Including Fans: 2-inch wg

F. Condensate Drain Pans: Fabricated using stainless 0.025 inch thick steel sheet, a minimum of 2 inches deep, and complying with ASHRAE 62.1 for design and construction of drain pans.

1. Double-Wall Construction: Fill space between walls with foam insulation and seal moisture tight.

2. Drain Connections: Threaded nipple.

G. Airstream Surfaces: Surfaces in contact with the airstream shall comply with requirements in ASHRAE 62.1.

H. Panels and Doors:

1. Panels:
   a. Fabrication: Formed and reinforced with same materials and insulation thickness as casing.
   b. Fasteners: Two or more camlock type for panel lift-out operation. Arrangement shall allow panels to be opened against air-pressure differential.
   c. Gasket: Neoprene, applied around entire perimeters of panel frames.

d. Size: Large enough to allow inspection and maintenance of air-handling unit's internal components. Dimensions to be at least 18 inches wide by full height of unit casing up to a maximum height of 60 inches.

2. Access Doors:
   a. Hinges: A minimum of two ball-bearing hinges or stainless steel piano hinge and two wedge-lever-type latches, operable from inside and outside. Arrange doors to be opened against air-pressure differential.
   b. Gasket: Neoprene, applied around entire perimeters of panel frames.
   c. Size: Large enough to allow inspection and maintenance of air-handling unit's internal components. Dimensions to be at least 18 inches wide by full height of unit casing up to a maximum height of 60 inches.

3. Locations and Applications:
   a. Fan Section: Doors and inspection and access panels.
   b. Access Section: Doors.
   c. Coil Section: Inspection and access panels.
   d. Damper Section: Inspection and access panels
   e. Filter Section: Inspection and access panels large enough to allow periodic removal and installation of filters.
   f. Mixing Section: Doors.

4. Service Light: 100-W vaporproof fixture with switched junction box located outside adjacent to door.
   a. Locations: Each section accessed with door.

2.05 FANS

A. Supply-Air Fans: Centrifugal, rated according to AMCA 210; galvanized or painted steel; mounted on solid-steel shaft.

   1. Direct-Driven Supply-Air Fans: Motor shall be resiliently mounted in the fan inlet.

   2. Belt-Driven Supply-Air Fans: Motors shall be installed on an adjustable fan base resiliently mounted in the casing.

B. Condenser-Coil Fan: Variable-speed propeller, mounted on shaft of permanently lubricated ECM motors.

C. Relief-Air Fan: shaft mounted on permanently lubricated motor.

D. Seismic Fabrication Requirements: Fabricate fan section, internal mounting frame and attachment to fans, fan housings, motors, casings, accessories, and other fan section components with reinforcement strong enough to withstand seismic forces defined in Section 23 05 48 "Vibration and Seismic Controls for HVAC" when fan-mounted frame and RTU-mounted frame are anchored to building structure.

2.06 MOTORS

A. Motor Sizes: Minimum size as indicated. If not indicated, large enough so driven load will not require motor to operate in service factor range above 1.0.

B. Service Factor: 1.15

2.07 COILS

A. General Requirements for Coils:

1. Comply with AHRI 410.

2. Fabricate coils section to allow removal and replacement of coil for maintenance and to allow in-place access for service and maintenance of coil(s).

3. Coils shall not act as structural component of unit.

B. Supply-Air Refrigerant Coil:

1. Tubes: Copper.

2. Fins:
   a. Material: Aluminum.
   b. Fin Spacing: Maximum 12 fins per inch.

3. Fin and Tube Joints: Mechanical bond.

4. Headers: Seamless-copper headers with brazed connections.

5. Frames: Galvanized steel

6. Coatings: Corrosion-resistant coating.

7. Ratings: Designed, tested, and rated according to ASHRAE 33 and AHRI 410.

a. Working Pressure: Minimum 300 psig.

C. Hot-Gas Reheat Refrigerant Coil:

1. Tubes: Copper.

2. Fins:
   a. Material: Aluminum
   b. Fin Spacing: Maximum 12 fins per inch.

3. Fin and Tube Joints: Mechanical bond.

4. Headers: Seamless-copper headers with brazed connections.

5. Frames: Galvanized steel

6. Coatings: Corrosion-resistant coating.

7. Ratings: Designed, tested, and rated according to ASHRAE 33 and AHRI 410.
   a. Working Pressure: Minimum 300 psig.

8. Suction-discharge bypass valve.

2.08 REFRIGERANT CIRCUIT COMPONENTS

A. Compressor: Hermetic, variable speed scroll, mounted on vibration isolators; with internal overcurrent and high-temperature protection, internal pressure relief.

B. Refrigeration Specialties:

1. Refrigerant: R-410A.

2. Expansion valve with replaceable thermostatic element.

3. Refrigerant filter/dryer.

4. Manual-reset high-pressure safety switch.

5. Automatic-reset low-pressure safety switch.

6. Minimum off-time relay.

7. Automatic-reset compressor motor thermal overload.

8. Brass service valves installed in compressor suction and liquid lines.

9. Low-ambient kit high-pressure sensor.

2.09 AIR FILTRATION

A. Minimum arrestance and a minimum efficiency reporting value according to ASHRAE 52.2.

B. Panel Filters:

1. Description: Flat, non-pleated factory-fabricated, self-supported, disposable air filters with holding frames.

2. Filter Unit Class: UL 900.

3. Media: Interlaced glass, synthetic or cotton fibers coated with nonflammable adhesive and antimicrobial coating.

4. Filter-Media Frame: Beverage board with perforated metal retainer, or metal grid, on outlet side.

C. Adhesive, Sustainability Projects: As recommended by air-filter manufacturer and with a VOC content of 80 g/L or less.

2.10 DAMPERS

A. Outdoor-Air Damper: Linked damper blades, for 0 to 30 percent outdoor air, with manual or motorized damper filter.

B. Outdoor- and Return-Air Mixing Dampers: Parallel or Opposed blade galvanized-steel dampers mechanically fastened to cadmium plated for galvanized-steel operating rod in reinforced cabinet. Connect operating rods with common and interconnect so dampers operate simultaneously.

1. Leakage Rate: As required by ASHRAE/IES 90.1.

2. Damper Motor: Modulating with adjustable minimum position.

3. Relief-Air Damper: Gravity actuated or motorized, as required by ASHRAE/IES 90.1, with bird screen and hood.

C. Barometric relief dampers.

D. Electronic Damper Operators:

1. Direct-coupled type designed for minimum 60,000 full-stroke cycles at rated torque.

2. Electronic damper position indicator shall have visual scale indicating percent of travel and 2- to 10-V dc, feedback signal.

3. Operator Motors:
   a. Size to operate with sufficient reserve power to provide smooth modulating action or two-position action.
   b. Permanent Split-Capacitor or Shaded-Pole Type: Gear trains completely oil immersed and sealed. Equip spring-return motors with integral spiral-spring mechanism in housings designed for easy removal for service or adjustment of limit switches, auxiliary switches, or feedback potentiometer.

4. Nonspring-Return Motors for Dampers Larger Than 25 Sq. Ft.: Size for running torque of 150 in. x lbf and breakaway torque of 300 in. x lbf.

5. Spring-Return Motors for Dampers Larger Than 25 Sq. Ft.: Size for running and breakaway torque of 150 in. x lbf.

6. Size dampers for running torque calculated as follows:
   a. Parallel-Blade Damper with Edge Seals: 7 inch-lb/sq. ft. of damper.
   b. Opposed-Blade Damper with Edge Seals: 5 inch-lb/sq. ft. of damper.
   c. Parallel-Blade Damper without Edge Seals: 4 inch-lb/sq. ft of damper.
   d. Opposed-Blade Damper without Edge Seals: 3 inch-lb/sq. ft. of damper.
   e. Dampers with 2- to 3-Inch wg of Pressure Drop or Face Velocities of 1000 to 2500 fpm: Increase running torque by 1.5.
   f. Dampers with 3- to 4-Inch wg of Pressure Drop or Face Velocities of 2500 to 3000 fpm: Increase running torque by 2.0.

7. Coupling: V-bolt and V-shaped, toothed cradle.

8. Overload Protection: Electronic overload or digital rotation-sensing circuitry.

9. Fail-Safe Operation: Mechanical, spring-return mechanism with external, manual gear release on nonspring-return actuators.

10. Power Requirements (Two-Position Spring Return): 24 V dc

11. Power Requirements (Modulating): Maximum 10 VA at 24 V ac or 8 W at 24 V dc.

12. Proportional Signal: 2 to 10 V dc or 4 to 20 mA, and 2- to 10-V dc position feedback signal.

13. Temperature Rating: Minus 22 to plus 122 deg F.

14. Run Time: 12 seconds open, 5 seconds closed.

2.11 ELECTRICAL POWER CONNECTIONS

A. RTU shall have a single connection of power to unit with unit-mounted disconnect switch accessible from outside unit and control-circuit transformer with built-in overcurrent protection.

2.12 CONTROLS

A. Basic Unit Controls:

1. Control-voltage transformer.

2. Wall-mounted thermostat or sensor with the following features:

a. Heat-cool-off switch.

b. Fan on-auto switch.

c. Fan-speed switch.

d. Automatic changeover.

e. Adjustable deadband.

f. Concealed set point.

g. Exposedindication.

h. Degree F indication.

i. Unoccupied-period-override push button.

j. Data entry and access port to input temperature set points, occupied and unoccupied periods, and output room temperature, supply-air temperature, operating mode, and status.

3. Remote Wall Mounted Annunciator Panel for Each Unit:

a. Lights to indicate power on, cooling, heating, fan running, filter dirty, and unit alarm or failure.

b. DDC controller or programmable timer and interface with HVAC instrumentation and control system.

c. Digital display of outdoor-air temperature, supply-air temperature, return-air temperature, economizer damper position, indoor-air quality, and control parameters.

B. DDC Controller:

1. Controller shall have volatile-memory backup.

2. Safety Control Operation:

a. Smoke Detectors: Stop fan and close outdoor-air damper if smoke is detected. Provide additional contacts for alarm interface to fire alarm control panel.

b. Firestats: Stop fan and close outdoor-air damper if air greater than 130 deg F enters unit. Provide additional contacts for alarm interface to fire alarm control panel.

c. Fire Alarm Control Panel Interface: Provide control interface to coordinate with operating sequence.

d. Low-Discharge Temperature: Stop fan and close outdoor-air damper if supply air temperature is less than 40 deg F.

e. Defrost Control for Condenser Coil: Pressure differential switch to initiate defrost sequence.

3. Scheduled Operation: Occupied and unoccupied periods on seven-day clock with a minimum of four programmable periods per day.

4. Unoccupied Period:

a. Heating Setback: Plus 10 deg F .

b. Cooling Setback: System off.

c. Override Operation: Two hours.

5. Supply Fan Operation:

    a. Occupied Periods: Run fan continuously.

    b. Unoccupied Periods: Cycle fan to maintain setback temperature.

6. Refrigerant Circuit Operation:

    a. Occupied Periods: Cycle or stage compressors, and operate hot-gas bypass] to match compressor output to cooling load to maintain room dischargetemperature and humidity. Cycle condenser fans to maintain maximum hot-gas pressure. Operate low-ambient control kit to maintain minimum hot-gas pressure.

    b. Unoccupied Periods: Cycle compressors and condenser fans for heating to maintain setback temperature.

    c. Switch reversing valve for heating or cooling mode on air-to-air heat pump.

7. Fixed Minimum Outdoor-Air Damper Operation:

    a. Occupied Periods: Open to 30 percent.

    b. Unoccupied Periods: Close the outdoor-air damper.

8. Economizer Outdoor-Air Damper Operation:

    a. Morning warm up building outdoor air flush cycles.

    b. Occupied Periods: Open to 30 percent fixed minimum intake, and maximum 100 percent of the fan capacity. Controller shall permit air-side economizer operation when outdoor air is less than 60 deg F. Use mixed-air and outdoor-air temperature to adjust mixing dampers. Start relief-air fan with end switch on outdoor-air damper. During economizer cycle operation, lock out cooling.

    c. Unoccupied Periods: Close outdoor-air damper and open return-air damper.

    d. Outdoor-Airflow Monitor: Accuracy maximum plus or minus 5 percent within 15 and 100 percent of total outdoor air. Monitor microprocessor shall adjust for temperature, and output shall range from 2- to 10-V dc.

9. Carbon Dioxide Sensor Operation:

a. Occupied Periods: Reset minimum outdoor-air ratio down to minimum 10 percent to maintain maximum 1000-ppm concentration.

b. Unoccupied Periods: Close outdoor-air damper and open return-air damper.

C. Interface Requirements for HVAC Instrumentation and Control System:

1. Interface relay for scheduled operation.

2. Interface relay to provide indication of fault at the central workstation and diagnostic code storage.

3. Provide BACnet compatible interface for central HVAC control workstation for the following:

a. Adjusting set points.

b. Monitoring supply fan start, stop, and operation.

c. Inquiring data to include outdoor-air damper position, supply- and room-air temperature.

d. Monitoring occupied and unoccupied operations.

e. Monitoring constant and variable motor loads.

f. Monitoring variable-frequency drive operation.

g. Monitoring cooling load.

h. Monitoring economizer cycles.

i. Monitoring air-distribution static pressure and ventilation air volume.

2.13 ACCESSORIES

A. Duplex, 115-V, ground-fault-interrupter outlet with 15-A overcurrent protection. Include transformer if required. Outlet shall be energized even if the unit main disconnect is open.

B. Low-ambient kit using variable-speed condenser fans for operation down to.

C. Filter differential pressure switch with sensor tubing on either side of filter. Set for final filter pressure loss.

D. Remote potentiometer to adjust minimum economizer damper position.

E. Return-air bypass damper.

F. Factory- or field-installed demand-controlled ventilation.

G. Safeties:

1. Smoke detector.

2. Condensate overflow switch.

3. Phase-loss reversal protection.

4. High and low pressure control.

H. Coil guards of painted, galvanized-steel wire.

I. Hail guards of galvanized steel, painted to match casing.

J. Concentric diffuser with white louvers and polished aluminum return grilles, insulated diffuser box with mounting flanges, and interior transition.

K. Door switches to disable heating or reset set point when open.

L. Outdoor air intake weather hood with moisture eliminator.

M. Service Lights and Switch: Factory installed in each accessible section with weatherproof cover. Factory wire lights to a single-point field connection.

2.14 ROOF CURBS

A. Roof curbs with vibration isolators and wind or seismic restraints are specified in Section 23 05 48 "Vibration and Seismic Controls for HVAC."

B. Wind and Seismic Restraints: Metal brackets compatible with the curb and casing, painted to match RTU, used to anchor unit to the curb, and designed for loads at Project site. Comply with requirements in Section 23 05 48 "Vibration and Seismic Controls for HVAC" for wind-load requirements.

C. Materials: Galvanized steel with corrosion-protection coating, watertight gaskets, and factory-installed wood nailer; complying with NRCA standards.

1. Curb Insulation and Adhesive: Comply with NFPA 90A or NFPA 90B.

a. Materials: ASTM C 1071, Type I or II.

b. Thickness: 1 inch.

2. Application: Factory applied with adhesive and mechanical fasteners to the internal surface of curb.

a. Liner Adhesive: Comply with ASTM C 916, Type I.

b. Mechanical Fasteners: Galvanized steel, suitable for adhesive attachment, mechanical attachment, or welding attachment to duct without damaging liner when applied as recommended by manufacturer and without causing leakage in cabinet.

c. Liner materials applied in this location shall have air-stream surface coated with a temperature-resistant coating or faced with a plain or coated fibrous mat or fabric depending on service air velocity.

d. Liner Adhesive: Comply with ASTM C 916, Type I.

D. Curb Dimensions: Height of 14 inches. Adaptable horizontal dimensions as required for existing roof openings.

PART 3 - EXECUTION

3.01 EXAMINATION

A. Examine substrates, areas, and conditions, with Installer present, for compliance with requirements for installation tolerances and other conditions affecting performance of RTUs.

B. Examine roughing-in for RTUs to verify actual locations of piping and duct connections before equipment installation.

C. Examine roofs for suitable conditions where RTUs will be installed.

D. Proceed with installation only after unsatisfactory conditions have been corrected.

3.02 INSTALLATION

A. Roof Curb: Install on roof structure or concrete base, level and secure, according to NRCA's "NRCA Roofing Manual: Membrane Roof Systems." and AHRI Guideline B. Install RTUs on curbs and coordinate roof penetrations and flashing with roof construction specified in Section 07 72 00 "Roof Accessories." Secure RTUs to upper curb rail, and secure curb base to roof framing or concrete base with anchor bolts.

B. Unit Support: Install unit level on structural curbs and steel supports. Coordinate wall penetrations and flashing with wall construction. Secure RTUs to structural support with anchor bolts.

C. Equipment Mounting:

1. Install RTUs on cast-in-place concrete equipment bases.

2. Comply with requirements for vibration isolation and seismic control devices specified in Section 23 05 48 "Vibration and Seismic Controls for HVAC."

3.03 CONNECTIONS

A. Install condensate drain, minimum connection size, with trap and indirect connection to nearest roof drain or area drain.

B. Duct installation requirements are specified in other HVAC Sections. Drawings indicate the general arrangement of ducts. The following are specific connection requirements:

1. Install ducts to termination at top of roof curb.

2. Remove roof decking only as required for passage of ducts. Do not cut out decking under entire roof curb.

3. Install return-air duct continuously through roof structure.

4. Install normal-weight, 3000-psi, compressive strength (28-day) concrete mix inside roof curb, 4 inches thick. Concrete, formwork, and reinforcement are specified with concrete.

C. Connect electrical wiring according to Section 26 05 19 "Low-Voltage Electrical Power Conductors and Cables."

D. Ground equipment according to Section 26 05 26 "Grounding and Bonding for Electrical Systems."

E. Install nameplate for each electrical connection, indicating electrical equipment designation and circuit number feeding connection.

1. Nameplate shall be laminated acrylic or melamine plastic signs as specified in Section 26 05 53 "Identification for Electrical Systems."

2. Nameplate shall be laminated acrylic or melamine plastic signs as layers of black with engraved white letters at least 1/2 inch high.

3. Locate nameplate where easily visible.

3.04 FIELD QUALITY CONTROL

A. Manufacturer's Field Service: Engage a factory-authorized service representative to test and inspect components, assemblies, and equipment installations, including connections.

B. Perform the following tests and inspections with the assistance of a factory-authorized service representative]:

1. After installing RTUs and after electrical circuitry has been energized, test units for compliance with requirements.

2. Inspect for and remove shipping bolts, blocks, and tie-down straps.

3. Operational Test: After electrical circuitry has been energized, start units to confirm proper motor rotation and unit operation.

4. Test and adjust controls and safeties. Replace damaged and malfunctioning controls and equipment.

C. RTU will be considered defective if it does not pass tests and inspections.

D. Prepare test and inspection reports.

3.05 STARTUP SERVICE

A. Engage a factory-authorized service representative to perform startup service.

B. Complete installation and startup checks according to manufacturer's written instructions.

1. Inspect for visible damage to unit casing.

2. Inspect for visible damage to furnace combustion chamber.

3. Inspect for visible damage to compressor, coils, and fans.

4. Inspect internal insulation.

5. Verify that labels are clearly visible.

6. Verify that clearances have been provided for servicing.

7. Verify that controls are connected and operable.

8. Verify that filters are installed.

9. Clean condenser coil and inspect for construction debris.

10. Remove packing from vibration isolators.

11. Inspect operation of barometric relief dampers.

12. Verify lubrication on fan and motor bearings.

13. Inspect fan-wheel rotation for movement in correct direction without vibration and binding.

14. Adjust fan belts to proper alignment and tension.

15. Start unit according to manufacturer's written instructions.

    a. Start refrigeration system.

    b. Do not operate below recommended low-ambient temperature.

    c. Complete startup sheets and attach copy with Contractor's startup report.

16. Inspect and record performance of interlocks and protective devices; verify sequences.

17. Operate unit for an initial period as recommended or required by manufacturer.

18. Calibrate thermostats.

19. Adjust and inspect high-temperature limits.

20. Inspect outdoor-air dampers for proper stroke and interlock with return-air dampers.

21. Start refrigeration system and measure and record the following when ambient is a minimum of 15 deg F above return-air temperature:

    a. Coil leaving-air, dry- and wet-bulb temperatures.

    b. Coil entering-air, dry- and wet-bulb temperatures.

    c. Outdoor-air, dry-bulb temperature.

    d. Outdoor-air-coil, discharge-air, dry-bulb temperature.

22. Inspect controls for correct sequencing of heating, mixing dampers, refrigeration, and normal and emergency shutdown.

23. Measure and record the following minimum and maximum airflows. Plot fan volumes on fan curve.

    a. Supply-air volume.

    b. Return-air volume.

    c. Relief-air volume.

    d. Outdoor-air intake volume.

24. Simulate maximum cooling demand and inspect the following:

    a. Compressor refrigerant suction and hot-gas pressures.

    b. Short circuiting of air through condenser coil or from condenser fans to outdoor-air intake.

25. Verify operation of remote panel including pilot-light operation and failure modes. Inspect the following:

    a. High-temperature limit on gas-fired heat exchanger.

    b. Low-temperature safety operation.

    c. Filter high-pressure differential alarm.

d. Economizer to minimum outdoor-air changeover.

e. Relief-air fan operation.

f. Smoke and firestat alarms.

26. After startup and performance testing and prior to Substantial Completion, replace existing filters with new filters.

3.06 CLEANING AND ADJUSTING

A. Occupancy Adjustments: When requested within 12 months from date of Substantial Completion, provide on-site assistance in adjusting system to suit actual occupied conditions. Provide up to two visits to Project during other-than-normal occupancy hours for this purpose.

B. After completing system installation and testing, adjusting, and balancing RTU and air-distribution systems, clean filter housings and install new filters.

3.07 DEMONSTRATION

A. Engage a factory-authorized service representative to train Owner's maintenance personnel to adjust, operate, and maintain RTUs.

END OF SECTION

SECTION 23 74 23.13

PACKAGED, DIRECT-FIRED, OUTDOOR, HEATING-ONLY MAKEUP-AIR UNITS

PART 1 - GENERAL

1.01 RELATED DOCUMENTS

A. Drawings and general provisions of the Contract, including General and Supplementary Conditions and Division 01 Specification Sections, apply to this Section.

1.02 SUMMARY

A. Section includes outdoor, direct, gas-fired heating-only, makeup air units, including the following components:

1. Casings.
2. Outdoor-air intake hood.
3. Roof curbs.
4. Fans, drives, and motors.
5. Air filtration.
6. Dampers.
7. Direct, gas-fired burners.
8. Unit control panel.
9. Controls.
10. Accessories.

1.03 ACTION SUBMITTALS

A. Product Data: For each outdoor, direct, gas-fired heating-only, makeup air unit.

1. Include construction details, material descriptions, dimensions of individual components and profiles, and finishes.

2. Include rated capacities, operating characteristics, electrical characteristics, and furnished specialties and accessories.

3. Include unit dimensions and weight.

4. Include cabinet material, metal thickness, finishes, insulation, and accessories.

5. Fans:

   a. Include certified fan-performance curves with system operating conditions indicated.

   b. Include certified fan-sound power ratings.

   c. Include fan construction and accessories.

   d. Include motor ratings, electrical characteristics, and motor accessories.

6. Include filters with performance characteristics.

7. Include direct, gas-fired burners with performance characteristics.

8. Include dampers, including housings, linkages, and operators.

B. Shop Drawings: For each outdoor, direct, gas-fired, heating-only, makeup air unit.

   1. Include plans, elevations, sections, and attachment details.

   2. Include details of equipment assemblies. Indicate dimensions, weights, loads, required clearances, method of field assembly, components, and location and size of each field connection.

   3. Detail fabrication and assembly of gas-fired heating and ventilating units, as well as procedures and diagrams.

   4. Include diagrams for power, signal, and control wiring.

C. Submittal: For vibration isolation and seismic restraints indicated to comply with performance requirements and design criteria, including analysis data signed and sealed by the qualified professional engineer responsible for their preparation.

   1. Include design calculations for selecting vibration isolators and seismic restraints and for designing vibration isolation bases.

1.04 INFORMATIONAL SUBMITTALS

A. Sample Warranty: For manufacturer's warranty.

B. Seismic Qualification Data: Certificates for outdoor, direct, gas-fired, heating-only, makeup air units, accessories, and components, from manufacturer.

1. Basis for Certification: Indicate whether withstand certification is based on actual test of assembled components or on calculation.

2. Dimensioned Outline Drawings of Equipment Unit: Identify center of gravity and locate and describe mounting and anchorage provisions.

3. Detailed description of equipment anchorage devices on which the certification is based and their installation requirements.

4. Restraint of internal components.

C. Product Certificates: Submit certification that specified equipment will withstand wind forces identified in "Performance Requirements" Article and in Section 230548 "Vibration and Seismic Controls for HVAC."

1. Basis for Certification: Indicate whether withstand certification is based on actual test of assembled components or on calculations.

2. Dimensioned Outline Drawings of Equipment Unit: Identify center of wind force and locate and describe mounting and anchorage provisions.

3. Detailed description of equipment anchorage devices on which the certification is based and their installation requirements.

1.05 CLOSEOUT SUBMITTALS

A. Operation and Maintenance Data: For direct, gas-fired, heating-only, makeup air units to include in emergency, operation, and maintenance manuals.

1.06 WARRANTY

A. Warranty: Manufacturer agrees to repair or replace components of direct-fired heating and ventilating units that fail in materials or workmanship within specified warranty period.

1. Warranty Period for Entire Unit: Manufacturer's standard, but not less than one year from date of Substantial Completion.

2. Warranty Period for Burners: Manufacturer's standard, but not less than five years from date of Substantial Completion.

PART 2 - PRODUCTS

2.01 PERFORMANCE REQUIREMENTS

A. Electrical Components, Devices, and Accessories: Listed and labeled as defined in NFPA 70, by an NRTL, and marked for intended location and application.

B. NFPA Compliance: Comply with NFPA 90A for design, fabrication, and installation of units and components.

C. ASHRAE 62.1 Compliance: Applicable requirements in ASHRAE 62.1, Section 5 - "Systems and Equipment" and Section 7 - "Construction and Startup."

D. ASHRAE/IES 90.1 Compliance: Applicable requirements in ASHRAE/IES 90.1, Section 6 - "Heating, Ventilating, and Air-Conditioning."

2.02 MANUFACTURERS

A. Trane or approved equal.

2.03 UNIT CASINGS

A. General Fabrication Requirements for Casings:

1. Forming: Form walls, roofs, and floors with at least two breaks at each joint.

2. Casing Joints: Sheet metal screws or pop rivets, factory sealed with water-resistant sealant.

3. Makeup Air Unit Mounting Frame: Formed galvanized-steel channel or structural channel supports, designed for low deflection, welded with integral lifting lugs.

4. Airstream Surfaces: Surfaces in contact with airstream shall comply with requirements in ASHRAE 62.1.

B. Panels and Doors:

1. Panels:

a. Fabrication: Formed and reinforced, with same materials and insulation thickness as casing.

b. Fasteners: Two or more camlock type for panel lift-out operation. Arrangement shall allow panels to be opened against airflow.

c. Gasket: Neoprene, applied around entire perimeters of panel frames.

d. Size: Large enough to allow unobstructed access for inspection and maintenance of unit's internal components.

2. Doors:

a. Fabrication: Formed and reinforced with same materials and insulation thickness as casing.

b. Hinges: A minimum of two ball-bearing hinges or stainless steel piano hinge and two wedge-lever-type latches, operable from inside and outside. Arrange doors to be opened against airflow. Provide safety latch retainers on doors so that doors do not open uncontrollably.

c. Gasket: Neoprene, applied around entire perimeters of panel frames.

d. Size: Large enough to allow unobstructed access for inspection and maintenance of unit's internal components.

2.04 OUTDOOR-AIR INTAKE HOOD

A. Type: Manufacturer's standard hood or louver.

B. Materials: Match cabinet.

C. Bird Screen: Comply with requirements in ASHRAE 62.1.

2.05 ROOF CURBS

A. Roof curbs with vibration isolators and wind or seismic restraints are specified in Section 23 05 48 "Vibration and Seismic Controls for HVAC."

B. Materials: Galvanized steel with corrosion-protection coating, watertight gaskets, and factory-installed wood nailer; complying with NRCA standards.

1. Application: Factory applied with adhesive and mechanical fasteners to the internal surface of curb.

a. Liner Adhesive: Comply with ASTM C916, Type I.

b. Mechanical Fasteners: Galvanized steel, suitable for adhesive attachment, mechanical attachment, or welding attachment to duct without damaging liner when applied as recommended by manufacturer and without causing leakage in cabinet.

c. Liner materials applied in this location shall have air-stream surface coated with a temperature-resistant coating or faced with a plain or coated fibrous mat or fabric depending on service air velocity.

d. Liner Adhesive: Comply with ASTM C916, Type I.

C. Wind and Seismic Restraints: Metal brackets compatible with the curb and casing, painted to match unit, used to anchor unit to the curb, and designed for loads at Project site. Comply with requirements in Section 23 05 48 "Vibration and Seismic Controls for HVAC" for wind-load requirements.

2.06 FANS, DRIVES, AND MOTORS

A. Fan and Drive Assemblies: Statically and dynamically balanced and designed for continuous operation at maximum-rated fan speed and motor horsepower.

1. Flexible Connector: Factory fabricated with a fabric strip minimum 3-1/2 inches (89 mm) wide, attached to two strips of minimum 2-3/4-inch- (70-mm-) wide by 0.028-inch- (0.7-mm-) thick, galvanized-steel sheet.

a. Flexible Connector Fabric: Glass fabric, double coated with neoprene. Fabrics, coatings, and adhesives shall comply with UL 181, Class 1.

B. Motors:

1. Motor Sizes: Maximum sizes as indicated. If not indicated, large enough so driven load will not require motor to operate in service factor range above 1.0.

C. Panel Filters:

1. Description: Pleated factory-fabricated, self-supported, disposable air filters with holding frames.

2. Filter Unit Class: UL 900.

3. Media: Interlaced glass, synthetic or cotton fibers coated with nonflammable adhesive and antimicrobial coating.

4. Filter-Media Frame: Beverage board with perforated metal retainer, or metal grid, on outlet side.

D. Cleanable Filters:

1. Cleanable metal mesh.

a. Sealing: Incorporate positive-sealing device to ensure seal between gasketed material on channels to seal top and bottom of filter cartridge frames to prevent bypass of unfiltered air.

2.07 DAMPERS

A. Electronic Damper Operators:

1. Direct-coupled type designed for minimum 60,000 full-stroke cycles at rated torque.

2. Electronic damper position indicator shall have visual scale indicating percent of travel and 2- to 10-V dc, feedback signal.

3. Operator Motors:

   a. Size to operate with sufficient reserve power to provide smooth modulating action or two-position action.

   b. Permanent Split-Capacitor or Shaded-Pole Type: Gear trains completely oil immersed and sealed. Equip spring-return motors with integral spiral-spring mechanism in housings designed for easy removal for service or adjustment of limit switches, auxiliary switches, or feedback potentiometer.

4. Nonspring-Return Motors for Dampers Larger Than 25 Sq. Ft. (2.3 sq. m): Size for running torque of 150 in. x lbf (16.9 N x m) and breakaway torque of 300 in. x lbf (33.9 N x m).

5. Spring-Return Motors for Dampers Larger Than 25 Sq. Ft. (2.3 sq. m): Size for running and breakaway torque of 150 in. x lbf (16.9 N x m).

6. Size dampers for running torque calculated as follows:

   a. Parallel-Blade Damper with Edge Seals: 7 inch-lb/sq. ft. (86.8 kg-cm/sq. m) of damper.

   b. Opposed-Blade Damper with Edge Seals: 5 inch-lb/sq. ft. (62 kg-cm/sq. m) of damper.

   c. Parallel-Blade Damper without Edge Seals: 4 inch-lb/sq. ft (49.6 kg-cm/sq. m) of damper.

   d. Opposed-Blade Damper without Edge Seals: 3 inch-lb/sq. ft. (37.2 kg-cm/sq. m) of damper.

   e. Dampers with 2- to 3-Inch wg (500 to 750 Pa) of Pressure Drop or Face Velocities of 1000 to 2500 fpm (5 to 13 m/s): Increase running torque by 1.5.

   f. Dampers with 3- to 4-Inch wg (750 to 1000 Pa) of Pressure Drop or Face Velocities of 2500 to 3000 fpm (13 to 15 m/s): Increase running torque by 2.0.

7. Coupling: V-bolt and V-shaped, toothed cradle.

8. Overload Protection: Electronic overload or digital rotation-sensing circuitry.

9. Fail-Safe Operation: Mechanical, spring-return mechanism with external, manual gear release on nonspring-return actuators.

2.08 DIRECT-FIRED GAS BURNER

A. Description: Factory assembled, piped, and wired; and complying with ANSI Z21.47 and with NFPA 54.

B. CSA Approval: Designed and certified by and bearing label of CSA.

2.09 UNIT CONTROL PANEL

A. Factory-wired, fuse-protected control transformer, connection for power supply and field-wired unit to remote control panel.

B. Control Panel: Surface-mounted remote panel, with engraved plastic cover and the following lights and switches:

1. On-off-auto]fan switch.

2. Heat-vent-off switch.

3. Supply-fan operation indicating light.

4. Heating operation indicating light.

5. Thermostat.

6. Damper position potentiometer.

7. Dirty-filter indicating light operated by unit-mounted differential pressure switch.

8. Safety-lockout indicating light.

2.10 ACCESSORIES

A. Filter differential pressure switch with sensor tubing on either side of filter. Set for final filter pressure loss.

B. Coil guards of painted, galvanized-steel wire.

2.11 MATERIALS

A. Steel:

1. ASTM A36/A36M for carbon structural steel.

2. ASTM A568/A568M for steel sheet.

B. Stainless Steel:

1. Manufacturer's standard grade for casing.

2. Manufacturer's standard type, ASTM A240/A240M for bare steel exposed to airstream or moisture.

C. Galvanized Steel: ASTM A653/A653M.

PART 3 - EXECUTION

3.01 EXAMINATION

A. Examine areas and conditions, with Installer present, for compliance with requirements for installation tolerances and other conditions affecting performance of the Work.

B. Examine roughing-in for piping, ducts, and electrical systems to verify actual locations of piping and electrical connections before equipment installation.

C. Verify cleanliness of airflow path to include inner-casing surfaces, filters, coils, turning vanes, fan wheels, and other components.

D. Proceed with installation only after unsatisfactory conditions have been corrected.

3.02 INSTALLATION

A. Roof Curb: Install on roof structure or concrete base, level and secure, according to NRCA's NRCA Roofing Manual: Membrane Roof Systems." Install units on curbs and coordinate roof penetrations and flashing with roof construction specified in Section 07 52 16 "Mod Bit Membrane Roofing-Patching Only." Secure units to upper curb rail, and secure curb base to roof framing or concrete base with anchor bolts. Coordinate sizes and locations of roof curbs with actual equipment.

B. Unit Support: Install unit level on structural curbs. Coordinate roof penetrations and flashing with roof construction. Secure units to structural support with anchor bolts. Coordinate sizes and locations of curbs with actual equipment provided.

1. Comply with requirements for vibration isolation and seismic-control devices specified in Section 23 05 48 "Vibration and Seismic Controls for HVAC."

C. Install gas-fired units according to NFPA 54, "National Fuel Gas Code."

D. Install controls and equipment shipped by manufacturer for field installation with direct-fired heating and ventilating units.

3.03 ELECTRICAL CONNECTIONS

A. Connect wiring according to Section 26 05 19 "Low-Voltage Electrical Power Conductors and Cables."

B. Ground equipment according to Section 26 05 26 "Grounding and Bonding for Electrical Systems."

C. Install electrical devices furnished by manufacturer, but not factory mounted, according to NFPA 70 and NECA 1.

D. Install nameplate for each electrical connection, indicating electrical equipment designation and circuit number feeding connection.

1. Nameplate shall be laminated acrylic or melamine plastic signs, as specified in Section 26 05 53 "Identification for Electrical Systems."

2. Nameplate shall be laminated acrylic or melamine plastic signs with a black background and engraved white letters at least 1/2 inch high.

3.04 CONTROL CONNECTIONS

A. Install control and electrical power wiring to field-mounted control devices.

B. Connect wiring according to Section 26 05 19 "Low-Voltage Electrical Power Conductors and Cables."

3.05 STARTUP SERVICE

A. Engage a factory-authorized service representative to perform startup service.

B. Complete installation and startup checks according to manufacturer's written instructions and perform the following:

1. Inspect for visible damage to burner combustion chamber.

2. Inspect casing insulation for integrity, moisture content, and adhesion.

3. Verify that clearances have been provided for servicing.

4. Verify that controls are connected and operable.

5. Verify that filters are installed.

6. Purge gas line.

7. Inspect and adjust vibration isolators and seismic restraints.

8. Verify bearing lubrication.

9. Inspect fan-wheel rotation for movement in correct direction without vibration and binding.

10. Adjust fan belts to proper alignment and tension.

C. Start unit according to manufacturer's written instructions.

1. Complete startup sheets and attach copy with Contractor's startup report.

2. Inspect and record performance of interlocks and protective devices; verify sequences.

3. Operate unit for run-in period recommended by manufacturer.

4. Perform the following operations for both minimum and maximum firing, and adjust burner for peak efficiency:

a. Measure gas pressure at manifold.

b. Measure combustion-air temperature at inlet to combustion chamber.

c. Measure supply-air temperature and volume when burner is at maximum firing rate and when burner is off. Calculate useful heat to supply air.

5. Calibrate thermostats.

6. Adjust and inspect high-temperature limits.

7. Inspect dampers, if any, for proper stroke and interlock with return-air dampers.

8. Inspect controls for correct sequencing of heating, mixing dampers, refrigeration, and normal and emergency shutdown.

9. Measure and record airflow. Plot fan volumes on fan curve.

10. Verify operation of remote panel, including pilot-operation and failure modes. Inspect the following:

a. High-limit heat.

b. Alarms.

11. After startup and performance testing, change filters, verify bearing lubrication, and adjust belt tension.

12. Verify drain-pan performance.

13. Verify outdoor-air damper operation.

3.06 CLEANING

A. After completing system installation and testing, adjusting, and balancing makeup air unit and air-distribution systems and after completing startup service, clean air-handling units internally to remove foreign material and construction dirt and dust. Clean fan wheels, cabinets, dampers, coils, and filter housings, and install new, clean filters.

3.07 FIELD QUALITY CONTROL

A. Testing Agency: Owner will engage a qualified testing agency to perform tests and inspections.

B. Manufacturer's Field Service: Engage a factory-authorized service representative to test and inspect components, assemblies, and equipment installations, including connections.

C. Units will be considered defective if they do not pass tests and inspections.

D. Prepare test and inspection reports.

3.08 DEMONSTRATION

A. Engage a factory-authorized service representative to train Owner's maintenance personnel to adjust, operate, and maintain heating and ventilating units.

END OF SECTION

SECTION 26 05 00
COMMON WORK RESULTS FOR ELECTRICAL

PART 1- GENERAL

1.01 RELATED DOCUMENTS

A. Drawings and general provisions of the Contract, including General and Supplementary Conditions and Division 1 Specification Sections, apply to this Section.

1.02 SUMMARY

A. This section includes general electrical requirements for all Division 26 work and is supplemental and in addition to the requirements of Division 1. See Division 01 for sequence of work.

B. It is the intention of this Division of the Specifications and the Contract Drawings to describe and provide for the furnishing, installing, testing, and placing in satisfactory and fully operational condition all equipment, materials, devices, and necessary appurtenances to provide a complete electrical system. Provide all materials, appliances and apparatus not specifically mentioned herein or shown on the drawings, but which are necessary to make a complete, fully operational installation of all electrical systems shown on the contract drawings or described herein. Connect equipment and devices furnished and installed under other Divisions of this specification (or the Owner) under this Division.

C. Workmanship shall be of the best quality and competent and experienced electricians shall be employed and shall be under the supervision of a competent and experienced foreman.

D. The drawings and specifications are complimentary and what is called for (or shown) in either is required to be provided as if called for in both. Where conflicting information occurs within the drawings and specifications or between the drawings and specifications, the more expensive alternative shall be used as a basis for bidding and construction.

E. Branch Circuit Wiring: Where the drawings identify circuit numbers for items requiring electrical power, but do not indicate the manner of the wiring between the item and its source, the manner of the wiring shall be devised by the contractor utilizing the following provisions:

1. Wire sizes:

a. Derate wiring for thermal restrictions imposed by the National Electrical Code.

b. If wire sizes are not otherwise indicated, wire sizes shall limit the voltage drop for circuits serving general purpose receptacles (180VA per strap) to less than 3%, based on the receptacle in the circuit that is farthest from the source being utilized with a load of 14 amps at 80% power factor. The following wire sizes and circuit lengths comply with this requirement:

1) #12 up to 90 feet

2) #10 up to 125 feet

3) #8 up to 190 feet

c. Wire sizes for other loads shall limit the voltage drop to less than 3% based on the load indicated on the panel schedule.

2. Multiwire circuits: Multiwire circuits shall not be used unless specifically indicated or noted on the drawings. Provide a dedicated neutral conductor for each single pole circuit breaker.

3. Do not combine wiring of different source panels in the same raceway system, unless the panels are interconnected with sub feed or through feed lugs with no intervening disconnecting means.

4. Outlet and junction boxes: Arrange wiring extensions from junction boxes to outlet boxes to restrict the number of wires in an outlet box as required by NEC Article 314.

5. Single tubular raceways extending into panels or switchboards shall not contain more than 20 wires.

1.03 WORK IN OTHER DIVISIONS

A. See all other specifications for other work which includes but is not limited to:

1. Conveying Systems

2. Cutting and Patching

3. Door Hardware

4. Fire Protection

5. Mechanical Systems and Control Wiring

6. Painting, Refinishing and Finishes

1.04 CODES, PERMITS, INSPECTION FEES

A. The following codes and standards are referenced in the Division 26 specifications. Perform all work and provide materials and equipment in accordance with the latest referenced codes and standards of the following organizations:

1. American National Standards Institute (ANSI)

2. National Electrical Manufacturer's Association (NEMA)

3. National Fire Protection Association (NFPA)

4. Underwriter's Laboratories (UL)

5. National Electrical Contractor’s Association (NECA)

B. Install the electrical systems based on the following:

NFPA 70	National Electrical Code as adopted and amended by the Local Jurisdiction.
IBC	International Building Code as adopted and amended by the Local Jurisdiction.

C. The referenced codes establish a minimum level of requirements. Where provision of the various codes conflict with each other, the more stringent provision shall govern. If any conflict occurs between referenced codes and this specification, the codes are to govern. Compliance with code requirements shall not be construed as relieving the Contractor from complying with any requirements of the drawings or specifications which may be in excess of requirements of the governing codes and rules and not contrary to same.

D. Obtain and pay for all licenses, permits and inspections required by laws, ordinances and rules governing work specified herein. Arrange for inspection of work by the inspectors and give the inspectors all necessary assistance in their work of inspection.

1.05 COORDINATION

A. Coordination during the bidding and pricing aspects of the contract includes determining where the work of other Divisions relies on the work of this Division for electricity and including the electrical system to match the requirements.

B. Coordinate work with that of the other Contractors and/or other trades doing work on the project. Examine all drawings and specifications of other trades for construction details and coordination. Make every reasonable effort to provide timely notice of work affecting other trades to prevent conflicts or interference as to space requirements, dimensions, openings, block-outs, sleeving or other matters which will cause delays or necessitate work-around methods.

C. Obtain submittals and shop drawings of all equipment with electrical connections furnished under other divisions of the specification and by the Owner. Provide all wiring in accordance with specific equipment requirements. Immediately advise the Architect of any changes which may affect the contract price.

D. Special attention is called to the following items. Coordinate all conflicts prior to installation:

1. Door swings such that switches will be located on the "strike" side of the door.

2. Location of grilles, pipes, sprinkler heads, ducts and other mechanical equipment so that all electrical outlets, lighting fixtures and other electrical outlets and equipment are clear from and in proper relation to these items.

3. Location of cabinets, counters and doors so that electrical outlets, lighting fixtures and equipment are clear from and in proper relation to these items.

4. Recessing and concealing electrical materials in CMU walls, concrete construction and precast construction.

5. At each switchboard, panelboard and motor control center location the Contractor shall monitor the work of all trades to assure that the space and clearance requirements of code are met.

6. Review specifications for other Divisions of the work to determine where other Divisions are requiring electrical connections. Verify electrical provisions shown on contract drawings by examining shop drawing submittals of other Divisions prior to submission to the owner. Do not proceed with ordering of supporting electrical equipment, such as circuit breakers, until electrical characteristics are verified. Proceed with rough-in only after verification of shop drawings.

E. Digital format copies of bid drawings will be furnished to the successful bidder. Augment bid documents with additional information to ensure coordination between trades. Provide digital format electrical systems drawings showing all ceiling devices, fixtures, raceways and cable tray locations and routing to mechanical contractor to be used for coordination drawings provided by mechanical contractor. Include dimensions and elevations of devices, fixtures, raceway and cable tray.

F. Furnish, install and place in satisfactory condition all raceways, boxes, conductors and connections and all other materials required for the electrical systems shown or noted in the contract documents to be complete, fully operational and fully tested upon completion of the project. Raceways, boxes, and ground connections are shown diagrammatically only and indicate the general character and approximate location. The layout does not necessarily show the total number of raceways or boxes for the circuits required, nor are the locations of indicated runs intended to show the actual routing of the raceways. Where routings of major raceways and telecommunication pathways are indicated on plan sheets, the routing information supplements the information on diagrams. If no routing information is shown, route the systems in a manner that will coordinate with new and existing infrastructure and the work of other trades.

G. The horsepower of motors and apparatus wattage's shown on the drawings are estimated requirements of equipment furnished under other Divisions of this contract. Provide overload elements to suit actual equipment nameplate current. Where connections to variable speed drives furnished under other sections of this specification are shown, obtain the drive input current and verify the indicated drive circuit is compatible. Advise Architect of any equipment changes or substitutions affecting electrical systems.

H. Consult the architectural drawings for the exact height and location of all electrical equipment not specified herein or shown on the drawings. Make any minor changes (less than 6'-6" horizontal) in the location of the raceways, outlets, boxes, devices, wiring, etc., from those shown on the drawings without extra charge, where coordination requires or if so directed by the Architect before rough-in.

I. Provide inserts or sleeves for outlet boxes, conductors, cables and/or raceways as required. Coordinate the installation thereof with other trades.

J. The Contractor will not be paid for relocation of work, cuttings, patching, and finishing required for work requiring reinstallation due to lack of coordination prior to installation.

1.06 WARRANTY

A. Refer to General Conditions of the Contract.

1.07 CORRECTION OF WORK

A. Within one year after the date of Substantial Completion of the work, the Contractor shall correct any work found to be not in conformance with the Contract Documents promptly after written notice from the owner to do so, unless the Owner has previously given the Contractor a written acceptance of such condition. This obligation shall survive acceptance of the work under this Contract and termination of the Contract. The Owner shall give such notice promptly after discovery of the condition.

1.08 ITEMIZED SCHEDULE OF COSTS

A. Complete the Schedule of Values included at the end of this section. This schedule shall be adhered to for the electrical contractor to facilitate analysis and approval of the monthly progress billings. Refer to the Supplementary Conditions of General Contract and Division 1 - General Requirements for details and conform thereto.

1.09 MATERIAL AND LABOR ALLOWANCE

A. Provide a material and installation allowance for additions or modifications directed by the Owner. As the work progresses it may become necessary to modify or add to portions of the electrical systems. Examples may be additional receptacles, creation of a small office space in an unfinished part of the building, resolving a hidden condition, or adding some work as part of a response to a contractor's request for information.

B. The electrical material and installation allowance shall appear as a line item on the Schedule of Values. This allowance is independent of any other allowance or requirement for work listed elsewhere in this contract. This material and labor allowance is independent of and in addition to any requirements for similar work identified on the drawings.

C. The allowance will not be used for electrical work in areas that have received their final architectural finish, unless the electrical work will not affect the finish. The units under this allowance shall include all direct and indirect, as well as supportive costs of work from other trades.

D. If the additions or modifications are needed for items that are not specifically listed, an equivalent value will be negotiated for items that are on the list, or at the Owner's discretion, a change order will be issued. If after substantial completion of the work there are remaining quantities of items which are unused the Owner may direct that the material portion of the items be turned over to the Owner, or negotiate a credit to the contract.

E. The contractor shall create an Excel software-based spreadsheet for tracking the usage of materials in this allowance. For each item identify the mechanism used to detract materials from the allowance (RFI #, etc.) the quantity of the allowance used, and the quantity remaining. Usage shall be as directed by the Owner, or as negotiated.

F. Provide Material and Labor Allowance for the following items:

1. Raceway: EMT behind concealed spaces but without the concealing element in place, or EMT in open spaces, or EMT surface mounted, complete with field bends, couplings, and pull boxes. Installed 10 feet above the floor, with pull boxes on 25-foot centers, and offsets around existing systems at 15-foot intervals. Quantities as follows:

   a. 3/4" 1000 Feet

   b. 1" 1000 Feet

   c. 1-1/4" 250 Feet

   d. 2-1/2" 100 Feet

2. Wire installed in raceway, with an average of 5 wires per raceway, with a pull length and termination at 25-foot intervals:

   a. #12 4000 Feet

   b. #10 4000 Feet

   c. #2 1200 Feet

3. Outlet box, coverplate, single gang: Quantity 25.

4. Switch or Receptacle, 15 or 20 amp with box and coverplate: Quantity 25.

5. Equipment connection, average size 30 amps, 3 phase: Quantity of 10.

1.10 CHANGE ORDERS

A. Comply with the requirements of Division 1.

B. Material pricing shall be based on competitive market conditions and include contractor net discounting. "List" or "book" pricing of material will not be accepted. Upon request, demonstrate that pricing is competitive by furnishing quotes from competing vendors or distributors.

C. Labor units shall be based on standard publications such as NECA or RS Means, using standard (not "change order") construction production. Where the change order requires additional work that is not normally part of the construction process, separately itemize the work and identify specific inefficiencies.

D. Labor pricing shall include an average of the journeyman and apprentice labor classification rates used to perform the work.

1.11 SUBMITTALS AND SHOP DRAWINGS

A. Submittals and Shop Drawings: Schedule so as not to delay construction schedule and no later than 60 days after award of contract, submit common brochure(s) with index and divider tabs by specification section, containing all required catalog cuts. Allow two weeks for review for each submittal and resubmittal. Incomplete submittals and shop drawings which do not comply with these requirements will be returned for correction, revision and resubmittal. Provide submittals for each product proposed for the project. See General Conditions for format, quantity, etc.

B. Submit in portable document format binder. Submittals shall show:

1. Indicate listing by UL or other approved testing agency.

2. Highlight with yellow or blue marker adequate information to demonstrate materials being submitted fully comply with contract documents.

3. Review and check all material prior to submittal and stamp "Reviewed and Approved".

C. Shop drawings shall show:

1. Ratings of items and systems.

2. How the components of an item or system are assembled, interconnected, function together and how they will be installed on the project.

3. System layout floor plans with complete device layout, point-to-point wiring connection between all components of the system, wire sizes and color coding.

4. Riser diagrams showing vertical wiring between components.

5. Line diagrams and or logical/control schematics including interface to other systems as applicable. Provide point to point wiring diagrams, indicate terminal identification at item of equipment. Typical diagrams may be used when accompanied by wire schedules that are specific to each product.

6. Coordinate with other division shop drawings and submittals. Identify interface points and indicate method of connection.

7. Electrical rooms: Submit 1/2" = 1'0" detail plans and wall elevations of each room showing actual size of equipment in place. Identify coordinating elements such as structural beams or mechanical systems. Submittals shall show coordination among all suppliers of equipment, including power components, fire alarm, racks, nurse call, public address, security, etc. Submit room layouts at same time as material submittals, and prior to installation of any equipment.

8. List of all Division 23 equipment noting actual rating of equipment that will be installed. For discrepancies between the requirements of the proposed equipment and the equipment provisions indicated on the drawings, indicate the contractor's proposed no cost change to the electrical system to accommodate the submitted equipment.

D. Release of Drawing Data files

1. Contractor may request to utilize the project drawing data files for assistance in producing shop drawings. Request shall be made by signing owner/design team’s requested documentation for release of the data files.

E. The Contractor agrees:

1. Submittals and shop drawings processed by the Architect are not change orders.

2. The purpose of submittals and shop drawings by the Contractor is to demonstrate to the Engineer that the Contractor understands the design concept.

3. Submittals demonstrate equipment and material Contractor intends to furnish and install and indicate detailing fabrication and installation methods Contractor intends to use.

4. To accept all responsibility for assuring that all materials furnished under this Division of the specifications meet, in full, all requirements of the contract documents.

5. To pay for Engineers review cost of submittal review beyond one resubmittal.

F. The Engineer's review is only for general conformance with the design concept of the project and general compliance with the information given in the contract documents. Corrections or comments made during this review do not relieve contractor from compliance with the requirements of the drawings and specifications. Contractor is responsible for: Dimensions which shall be confirmed and correlated at the job site; fabrication process and techniques of construction; coordination of his work with that of all other trades; performing his work in a safe and satisfactory manner.

G. Submittals and shop drawings are required per the individual sections and the submittals schedule at the end of this Section.

1.12 PROJECT CLOSE-OUT

A. Coordinate with close-out provisions in Division 01 - General Requirements.

B. Request For Final Punchlist

1. To request a final electrical punch list, forward a letter to the Architect. stating; "The electrical work on this project is complete, all punch list items to date are complete, items a. - n. in the Punchlist Procure paragraph in Section 26 05 00 - Common Work Results For Electrical are complete and the project is ready for final punch list observation."

2. Project Punchlist Procedure: Perform the following procedures for project closeout of electrical portions of work.

   a. Perform testing, tests, and documentation per Division 26 requirements.

   b. Provide engraved nameplates on electrical equipment.

   c. Refinish electrical equipment finishes which are damaged.

   d. Clean light fixtures per Section 26 05 00 - Common Work Results For Electrical.

   e. Color code junction boxes per Section 26 05 33 - Raceways and Boxes For Electrical Systems.

   f. Provide spare fuses and cabinet per Section 26 28 13 - Fuses.

   g. Insert word processed (typed) Panel Schedules in all new and existing panelboards with actual "as-built" circuit descriptions.

   h. Number all circuit breakers.

i. Obtain final electrical permit inspection. Include copies in O & M manual.

j. Provide written warranty in O & M per the General Conditions of the Contract.

k. Furnish Record Drawings per this section. Obtain signature on Job Completion Form.

l. Furnish O & M Manuals per this section. Obtain signature on Job Completion Form.

m. Give instruction periods to owner's personnel per this section. Obtain signature on Job Completion Form.

n. To request final acceptance of project, fill out Job Completion Form in this section and forward to Architect. Note: If inspectors have not signed form, a copy of signed-off permits will suffice.

o. Include with Job Completion Form, a copy of the final punch list with the word "DONE", and the date and Contractor's initials after each item on the list.

1.13 ELECTRICAL EQUIPMENT OPERATION AND MAINTENANCE (O&M) MANUALS

A. Provide O&M manuals required in Division 01 - General Requirements for all equipment furnished under Division 26 - Electrical of the specifications. Submit a preliminary copy, complete except for the bound cover, 60 days prior to completion of the project for checking and review. Deliver final bound corrected copies as noted in Division 1 - General Requirements 20 days prior to scheduled instruction periods. Obtain a receipt for the manuals and forward a copy of the receipt to the Engineer with the Job Completion Form.

B. The information included must be the exact equipment installed. Where sheets show the equipment installed and other equipment, the installed equipment shall be neatly and clearly identified on such sheets.

C. These O&M manuals shall contain all the information needed to operate and maintain all systems and equipment provided in the project. Present and arrange information in a logical manner for efficient use by the Owner's operating personnel. The information provided shall include but not be limited to the following:

1. Equipment manufacturer, make, model number, size, nameplate data, etc.

2. Description of system configuration and operation including component identification and interrelations. A master control schematic drawing(s) may be required for this purpose.

3. Dimensional and performance data for specific unit provided as appropriate.

4. Manufacturer's recommended operation instructions.

5. Manufacturer's recommended lubrication and servicing data including frequency.

6. Complete parts list including reordering information, recommended spares and anticipated useful life (if appropriate). Parts lists shall give full ordering information assigned by the original parts manufacturer. Relabeled and/or renumbered parts information as reassigned by equipment supplier not acceptable. Include the parts list and part diagram that was included with the product's packaging, note that a "catalog cut" will not meet this criterion.

7. Shop drawings.

8. Wiring diagrams.

9. Signal equipment submittals shall contain step-by-step circuit description information designed to acquaint maintenance personnel with equipment operation in each mode of operation.

10. A complete list of local (nearest) manufacturer representative and distributor contacts for each type of equipment and manufacturer. Include name, company, address, phone, fax, e-mail address, and web site.

D. Furnish complete wiring diagrams for each system for the specific system installed under the contract. "Typical" line diagrams will not be acceptable unless revised to indicate the exact field installation.

E. Group the information contained in the manuals in an orderly arrangement by specification index. Provide a typewritten index and divider sheets between categories with identifying tabs. Bind the completed manuals with hard board covers not exceeding 5" thick. (Provide two or more volumes if required.) Signal and communication systems shall be in separate volumes. Imprint the covers with the name of the job, Owner, Architect, Electrical Engineer, Contractor, and year of completion. Imprint the back edge with the name of the job, Owner, and year of completion. Hard board covers and literature contained may be held together with screw post binding.

1.14 INSTRUCTION PERIODS

A. After substantial completion of the work and 20 days after the O&M manuals have been delivered to the owner and after all tests and final inspection of the work by the Authority(s) Having Jurisdiction; demonstrate the electrical systems and instruct the Owner's designated operating and maintenance personnel in the operation and maintenance of the various electrical systems. The Contractor shall arrange scheduled instruction periods with the Owner. The Contractor's representatives shall be superintendents or foremen knowledgeable in each system and suppliers representatives when so specified. When more than one training session is specified, the second session shall be 30 to 90 days after the first as agreed to by the Owner.

B. Include in each instruction session an overview of the system, presentation of information in maintenance manuals with appropriate references to drawings. Conduct tours of the building areas with explanations of maintenance requirements, access methods, servicing and maintenance procedures, equipment cleaning procedures and adjustment locations.

C. Include the following scheduled instruction periods:

		1st Session	2nd Session
1.	Power Distribution System	4 hours	4 hours
2.	Lighting Control & Dimming System	4 hours	4 hours
3.	Power Generation Equipment & Transfer Switches	4 hours	4 hours
4	Paralleling Low-Voltage Switchgear	4 hours	4 hours
5	Static Uninterruptible Power Supply	4 hours	4 hours
6	Transient Voltage Suppression System(s)	2 hours	2 hours

D. Factory trained suppliers representatives shall provide instruction for lighting control/dimming, power generation & transfer switches, paralleling low voltage switchgear, static uninterruptible power supply and transient voltage suppression system(s).

E. Provide one professionally produced digitally recorded or video tape of each training session in DVD format. Furnish two (2) copies to the owner.

1.15 RECORD DRAWINGS

A. Record drawings shall be kept on: the contract drawings, shop drawings indicating field wiring, vendor diagrams indicating field wiring, and similar documents.

B. Continually record the actual electrical system(s) installation on a set of prints kept readily available at the project during construction. These prints shall be used for this purpose alone.

1. Mark record drawings in portable document format in red with Bluebeam or Adobe Acrobat. Mark the set to show the actual installation where the installation varies substantially from the work as originally shown.

2. Accurately locate with exact dimensions all underground and underslab raceways and stub-outs.

3. Note changes of directions and locations, by dimensions and elevations, as utilities are actually installed.

4. Include addenda items and revisions made during construction.

5. Erase conditions not constructed or "X-out" and annotate "not constructed" to clearly convey the actual "as constructed" condition.

6. Organize record drawings sheets in manageable sets, bind and print suitable titles, dates and other identification on the cover of each set.

7. Where “typical” wiring diagrams were used during submittals the record drawings shall indicate exact point to point wiring with exact terminal number designations.

C. Transmit the record drawing set to the Architect at the completion of the work. Final payment to the contractor will not be authorized until these prints have been submitted to and accepted by the Architect.

D. Transfer the changes marked up on the record prints into AutoCAD drawing files at the completion of the work. The version of AutoCAD shall not be earlier than the most recent version available at the date the project bids were received. AutoCAD files shall not include the stamp of the engineer of record. Provide two (2) sets of prints, one set of fixed line reproducible drawings and one set of AutoCAD drawing files on CD Rom. Transmit drawings, AutoCAD drawing files and the record drawing mark-ups to the Architect. Final payment to the contractor will not be authorized until these documents have been submitted to and accepted by the Architect.

1.16 FINAL ACCEPTANCE REQUEST

A. Submit to the Architect, a Division 26 Job Completion Form (form attached in this section) properly filled out prior to the time final acceptance of the electrical work is requested.

1.17 ABBREVIATIONS AND DEFINITIONS

A. When the following abbreviations and definitions are used in relation to the work for Division 26 they shall have the following meanings:

Item	Meaning
AHJ	Authority Having Jurisdiction.
Boxes	Outlet, Junction or Pull Boxes.
Code	All applicable codes currently enforced at project location.
Compression	Compressed using a leveraged powered (hydraulic or equivalent) crimping tool.
Connection	All materials and labor required for equipment to be fully operational.
Exterior Location	Outside of or penetrating the outer surfaces of the building weather protective membrane.
Fully Operational	Tested, approved, and operating to the satisfaction of the AHJ, manufacturer and contract documents.
Furnish	Deliver to the jobsite
Install	To enter permanently into the project and make fully operational.
Kcml	Thousand circular mils (formerly MCM).
Mfr.	Manufacturer.
NEC	National Electrical Code, National Fire Protection Association, Publication #70.
NIC	Not in Contract.
Noted	Shown or specified in the contract documents.
Provide	Furnish and install.
Required	As required by code, AHJ, contract documents, or manufacturer for the particular installation to be fully operational.
Shown	As indicated on the drawings or details.
Wiring	Raceway, conductors and connections.

PART 2 - PRODUCTS

2.01 GENERAL

A. All materials and equipment installed shall have been tested and listed by Underwriters Laboratories or other approved testing organization and shall be so labeled unless otherwise permitted by the Authority Having Jurisdiction (Inspector).

B. All materials to be new, free from defects and not less than quality herein specified. Materials shall be designated to ensure satisfactory operation and operational life in the environmental conditions which will prevail where they are being installed.

C. Each type of materials furnished shall be of the same make, be standard products of manufacturers regularly engaged in production of such materials and be the manufacturer's latest standard design.

D. All materials, equipment and systems furnished that include provisions for storing, displaying, reporting, interfacing, inputting, or functioning using date specific information shall perform properly in all respects regardless of the century. Any interface to other new or existing materials, equipment or systems shall function properly and shall be century compliant, both in regard to information sent and received.

2.02 SUBSTITUTION OF MATERIALS

A. No Substitute: Where a specified product is indicated "no substitute", it is the intent of this specification to require new materials to be compatible with the existing installation or as specifically requested by the owner. To this end certain materials and systems no substitution will be allowed.

B. Prior to Bid Opening: Acceptance of products other than those specified will be issued by addendum to the bid documents only after the following requirements are met and the proposed listed material is determined to meet or exceed the requirements:

1. Requests for listing to be original material, clearly indicating the product fully complies with contract documents and be neatly marked with yellow felt tip marker to clearly define and describe the product for which listing is requested.

2. Include certified laboratory test report for lighting fixtures.

3. Samples shall be submitted if requested.

4. Requests shall be received 10 days prior to bid opening.

5. Requests containing insufficient information to confirm compliance with contract documents will not be considered.

C. After Award of Contract: Substitution of products will be considered after award of contract only under the following conditions:

1. The Contractor shall have placed orders for specified materials promptly after contract is awarded and the specified products can not be delivered to the project to meet the Owner's construction schedule.

2. The reason for the unavailability is beyond the Contractor's control, i.e., due to strikes, bankruptcy, discontinuance of manufacturer, acts of God.

3. The specified product is no longer manufactured.

4. There is compelling economic advantage to the Owner.

D. In all cases, should a substituted material result in requiring electrical system or building modifications; the Contractor alone shall pay all costs to provide these modifications including all costs to the Engineer and Architect for redesign, and updating of record drawings required to accommodate the required modifications.

1.18 NAMEPLATES

A. Provide nameplates per Section 26 05 53 - Identification for Electrical Systems.

PART 3 - EXECUTION

3.01 GENERAL

A. All work shall be done in accordance with NECA construction standards.

B. Adhere to industry standards of care for safety, including:

1. Occupational Safety and Health Act.

2. Accident Prevention Manual for Industrial Operations, National Safety Council.

3. ANSI/NFPA 70E, Electrical Safety Requirements for Employee Workplaces.

4. American National Standards for Personnel Protection: Lockout/Tagout.

5. Applicable state and local safety operating procedures.

3.02 PRODUCT DELIVERY, STORAGE AND HANDLING

A. Deliver, store, and handle products according to the manufacturer's recommendations, using means and methods that will prevent damage, deterioration, and loss, including theft. Handle all equipment carefully to prevent damage, breakage, denting, and scoring of finishes. Do not install damaged equipment.

B. Store products subject to damage by the elements above ground, undercover in a weather tight enclosure, with ventilation adequate to prevent condensation. Maintain temperature and humidity within range required by manufacturer's instruction.

3.03 CUTTING BUILDING CONSTRUCTION

A. Obtain permission from the Architect and coordinate with other trades prior to cutting. Locate cuttings so they will not weaken structural components. Cut carefully and only the minimum amount necessary. Cut concrete with diamond core drills or concrete saws except where space limitations prevent the use of such tools.

B. All construction materials damaged or cut into during the installation of this work must be repaired or replaced with materials of like kind and quality as original materials by skilled labor experienced in that particular building trade.

3.04 PENETRATION OF BUILDING ELEMENTS

A. General:

1. Penetrations of building elements by electrical systems shall not compromise the performance and integrity of the building element (structural, fire, smoke, waterproof, etc.)

B. Fire and smoke rated elements:

1. Electrical penetrations of fire and smoke rated floor and wall assemblies shall maintain fire-resistance or smoke barrier rating of the assembly.

3.05 PAINTING

A. Items furnished under this Division that are scratched or marred in shipment or installation shall be refinished with touchup paint selected to match installed equipment finish.

3.06 EQUIPMENT CONNECTION

A. For equipment furnished under this or other Divisions of the specifications, or by owner, provide all electrical connections necessary to serve such equipment and provide required control connections to all equipment so that the equipment is fully operational upon completion of the project. Investigate existing equipment to be relocated and provide new connections as required.

B. Contract Coordination: Investigate vendor equipment proposed for installation and address and integrate the following into the construction process:

1. Special equipment requirements identified in shop drawings or submittals.

2. Equipment requirements for distribution system performance, for example, an external disconnect switch or fused disconnect switch to provide compliance with a governing code, a short circuit current rating, or a listing.

C. Obtain rough-in requirements for equipment furnished under other divisions of this specification prior to roughing-in. Delete if housekeeping pads are not required.

3.07 HOUSEKEEPING PADS

A. Provide steel reinforced concrete housekeeping pad under each floor mounted switchboard, transformer, motor control center, generator and/or other free standing electrical equipment. Size 4" greater (horizontal minimum) than base of equipment mounted thereon. Minimum height 3-1/2". Use 3000-psi, 28 day compressive strength concrete and reinforcement as specified in Division 3 Section "Cast-in-Place Concrete". Chamfer edges and finish smooth with all blockouts square and plumb.

B. When housekeeping pad is poured on previously poured concrete or is for engine or motor driven equipment, the pad shall be reinforced (4# rebar, 12" o.c., both ways) and the rebar shall be tied to the existing floor via #4 rebar epoxy grouted into the existing concrete on 18" centers or other acceptable means. The existing slab shall be thoroughly cleaned and prepared for the pad just before the pour.

3.08 CLEAN UP

A. Contractor shall continually remove debris, cuttings, crates, cartons, etc., created by his work. Such clean up shall be done daily and at sufficient frequency to eliminate hazard to the public, other workmen, the building, or the Owner's employees. Before acceptance of the installation, Contractor shall carefully clean cabinets, panels, lighting fixtures, wiring devices, cover plates, etc., to remove dirt, cuttings, paint, plaster, mortar, concrete, etc. Blemishes to finished surfaces of apparatus shall be removed and new finish equal to the original applied.

1. Wipe surfaces of electrical equipment. Remove excess lubrication, paint and mortar droppings, and other foreign substances.

2. Clean light fixtures, lamps, globes, and reflectors to function with full efficiency. Replace burned-out bulbs, and those noticeably dimmed by hours of use, and defective and noisy starters in fluorescent, high pressure sodium, metal halide, and mercury vapor fixtures to comply with requirements for new fixtures.

3.09 TESTING AND DEMONSTRATION

A. Demonstrate that all electrical equipment operates as specified and in accordance with manufacturer's instructions. Perform tests in the presence of the Architect, Owner or Engineer. Provide all instruments, manufacturer's operating instructions and personnel required to conduct the tests. Repair or replace any electrical equipment that fails to operate as specified and or in accordance with manufacturer's requirements.

B. Contractor shall remove and replace covers of electrical equipment, open manholes and remove/replace ceiling tiles to permit engineer to observe equipment and wiring provided. For manholes: Furnish OSHA safety compliant equipment and personnel, including ventilation, safety harness, ladder and flashlight.

DIVISION 26 ELECTRICAL JOB COMPLETION FORM

PROJECT NAME: Replacement of Mechanical Units at Santa Ana Bus Base

PROJECT LOCATION: 4301 W. MacArthur Blvd., Santa Ana, CA

DATE: _____

A. Electrical Inspectors Final Acceptance (Copy of certificate attached.)

_____

Name Agency Date

B. Fire Marshal's Final Acceptance of Fire Alarm System (Copy of certificate attached.)

_____

Name Agency Date

C. The following systems have been demonstrated to Owner's representative.

1. Power Distribution System

   _____

   Owner's Rep. Date

2. Lighting Control & Dimming System

   _____

   Owner's Rep Date

3. Power Generation Equipment and Transfer Switches

   _____

   Owner's Rep Date

4. Paralleling Low-Voltage Switchgear

   _____

   Owner's Rep Date

5. Static Uninterruptible Power Supply

   _____

   Owner's Rep Date

6. Transient Voltage Suppression System(s) _____

Owner's Rep Date

D. Record Drawings
Attached Transmitted previously to

_____
Date

E. O & M Manuals

Attached Transmitted previously to

_____

F. Test Reports
Attached Transmitted previously to

_____
Date

G. The work is complete in accordance with contract documents and authorized changes except for

_____
and the architect/engineer's representative is requested to meet with

at on

_____ _____ _____
Supervisor of Electrical Work Time Date

_____ _____
Contractors Rep. Signature Date

Division 26 Schedule of Values for Replacement of Mechanical Units at Santa Ana Bus Base

Description of Work	Amount
Material and Labor Allowance	
Mechanical Power Connections (starter & disconnects) - Labor	
Labor and Material Allowance	
Strap Support Allowance (for existing systems) - Labor & Materials	
Testing, Demonstration (AHJ approvals)	
Close Out (Record Drawings, O&M, etc.) - Materials & Labor	
TOTAL DIVISION 26	

DIVISION 26 SUBMITTAL LIST FOR OCTA REPLACEMENT OF MECHANICAL UNITS AT SANTA ANA BUS BASE

SECTION	DESCRIPTION	SUBMIT RECEIVE DATE	STATUS
260500	COMMON WORK RESULT FOR ELECTRICAL		
260502	MECHANICAL-ELECTRICAL COORDINATIO		
260519	LOW VOLTAGE ELECTRICAL POWER CONDUCTORS AND CABLES		
260526	GROUNDING AND BONDING FOR ELECTRICAL SYSTEMS		
260529	HANGERS AND SUPPORTS FOR ELECTRICAL SYSTEMS		
260533	RACEWAYS AND BOXES FOR ELECTRICAL SYSTEMS		
260548.16	SEISMIC CONTROLS FOR ELECTRICAL SYSTEMS		
260553	IDENTIFICATION FOR ELECTRICAL SYSTEMS		
260913	ELECTRICAL POWER MONITORING AND CONTROL		
262726	WIRING DEVICES		
262813	FUSES		
262816	ENCLOSED SWITCHES AND CIRCUIT BREAKERS		
262913	ENCLOSED CONTROLLERS		

END OF SECTION

SECTION 26 05 02

MECHANICAL – ELECTRICAL COORDINATION

PART 1 - GENERAL

1.01 SUMMARY

A. Section Includes:

1. Mechanical Electrical interfaces and coordination.

2. Code requirements for Electrical equipment spaces and rooms.

1.02 RELATED SECTIONS:

A. Division 23 – Mechanical: Products Installed But Not Furnished Under This Section

B. Division 23 – Mechanical: Certain motor starters, control devices, disconnects and circuitry as defined in this section.

1.03 MECHANICAL COORDINATION

A. The coordination matrix in this section will take precedence over all other Specification Sections responsibility matrices.

B. The Design/Build Electrical Contractor shall attend design team coordination meetings, identify space requirements for the electrical equipment, if submittals are available investigate the power requirements for the Owner's existing and proposed equipment, and ensure that all design information is obtained and that conflicts with the architectural, structural, mechanical, or other portions of the project are resolved prior to installation of electrical systems. The basis of this coordination shall be the most current set of Mechanical drawings and correspondence received prior to the current budget. Any electrical work necessary to serve Mechanical items not specified via the above outline is not included in the Division 26 scope of work.

C. The Mechanical & Electrical Contractors shall coordinate and pay special attention to NEC Article 110-26, specifically:

1. Requirements for Electrical Spaces: Spaces About Electrical Equipment

2. Dedicated Equipment Space. All switchboards, panel boards, distribution boards, and motor control centers shall be located in dedicated spaces and protected from damage.

    a. Exception: Control equipment that by its very nature or because of other rules of the Code must be adjacent to or within sight of its operating machinery shall be permitted in those locations.

3. Indoor. Indoor installations shall comply with 110.26(F)(1)(a) through (F)(1)(d).

4. Dedicated Electrical Space. The space equal to the width and depth of the equipment and extending from the floor to a height of 1.8 m (6 ft.) above the equipment or to the structural ceiling, whichever is lower, shall be dedicated to the electrical installation. No piping, ducts, leak protection apparatus, or other equipment foreign to the electrical installation shall be located in this zone.

    a. Exception: Suspended ceilings with removable panels shall be permitted within the 1.8-m (6-ft.) zone.

5. Foreign Systems. The area above the dedicated space required by 110.26(F)(1)(a) shall be permitted to contain foreign systems, provided protection is installed to avoid damage to the electrical equipment from condensation, leaks, or breaks in such foreign systems.

6. Sprinkler Protection. Sprinkler protection shall be permitted for the dedicated space where the piping complies with this section.

7. Suspended Ceilings. A dropped, suspended, or similar ceiling that does not add strength to the building structure shall not be considered a structural ceiling.

8. Outdoor. Outdoor electrical equipment shall be installed in suitable enclosures and shall be protected from accidental contact by unauthorized personnel, or by vehicular traffic, or by accidental spillage or leakage from piping systems. The working clearance space shall include the zone described in 110.26(A). No architectural appurtenance or other equipment shall be located in this zone.

D. The Design/Build Electrical Contractor shall coordinate all power and control requirements for the electrical connections to Mechanical Systems with the Design/Build Mechanical Contractor. The following are guidelines for responsibility between the Design/Build Mechanical and Electrical Contractors:

E. Electrical characteristics (listed below) of all mechanical equipment shall be provided by the Mechanical Design Build Subcontractor to the Electrical Design Build Subcontractor:

1. Voltage (selected with consideration of the project standard available voltages)

2. Full or Running Load amps

3. Locked Rotor Amps

4. Minimum Circuit Ampacity.

5. Maximum Overcurrent Protective device (and limitations as to type of fuse, HACR" circuit breaker, etc)

6. Harmonic characteristics of Adjustable Frequency Drives provided for the project.

F. Starters and Disconnect Switches: Except where specifically provided by the Design/Build Mechanical Contractor, the Design/Build Electrical Contractor shall provide all required disconnect switches (fused or non-fused as required by code), and motor starters. The motor starters are to include:120 Volt H-O-A switches, control power transformer, motor circuit protector and (2) auxiliary contacts as required for control purposes including one normally open and one normally closed contact. If individual motor starters/contactors are provided they may be the combination type at the contractor's option, with the disconnect switch, motor circuit protector, and starter built into a single unit. The Design/Build Electrical Contractor shall coordinate with the Design/Build Mechanical Contractor the horsepower, motor speed, KW, AIC rating, etc. of all mechanical system loads and provide the proper type of motor starter or contactor. Control and Interlock Wiring: The Design/Build Mechanical Contractor is responsible for providing and installing all low voltage control wiring. The Design/Build Electrical Contractor shall provide all power wiring to mechanical equipment shown on drawings or by coordination with mechanical contractor, including wiring to 120 volt fans, pumps, control devices such as timers or thermostats, that are furnished by the Design/ build Mechanical Contractor and installed by the Design/Build Electrical Contractor. Wall mounted boxes and conduit to ceiling space for the installation of low voltage thermostats or controls shall be provided by the Mechanical Contractor. Coordinate locations with electrical contractor prior to rough-in.

G. Control Devices: All HVAC control devices including thermostats, relays, etc. shall be furnished by the Design/Build Mechanical Contractor, except as defined by the attached coordination matrix.

H. (2) Auxiliary contacts within motor starters (1) Normally Open and (1) Normally Closed shall be provided unless otherwise previously coordinated.

I. All control wiring for Motor Starters shall be by the Mechanical Contractor, except for starters controlled by FA (item #3 in matrix)

Control Panels: The Design/Build Mechanical Contractor shall provide all HVAC System control panels. The Design/Build Electrical Contractor shall provide the necessary 120 volt power to each panel as well as to junction boxes, at locations designated by the Design/Build Mechanical Contractor, for control power.

J. Each 120 volt branch circuit which serves mechanical control equipment shall not be used to serve other loads. Any phone lines necessary for monitoring or control of Mechanical panels or systems are to be provided by others unless coordinated with the Design/Build Electrical Contractor.

1.04 LIFE SAFETY SYSTEMS:

A. The Design/Build Electrical Contractor shall provide all required Life Safety System controls, relays, wiring, detectors, 120V connections to motorized dampers, etc. The duct smoke detectors are to be a part of the Fire Alarm System and the Design/Build Mechanical Contractor shall provide, locate, and install a contact block (in all HVAC equipment to be shut down) and all interlock wiring for automatic HVAC equipment shutdown upon detection of smoke between the duct detector and this block shall be installed by the EC. These detectors shall have local alarm indicating lights and be zoned to the main Fire Alarm System to facilitate easy location of a detector when in trouble or alarm condition. The number of dampers & duct smoke detectors shall be based on the most current set of Mechanical drawings/schedules or correspondence received prior to GMP Pricing Set (50% Construction Documents).

B. Where required the Design/Build Electrical Contractor shall provide smoke detectors at the ceiling of all rated corridors and provide the necessary fire alarm and 120 volt power connections to the fire/smoke dampers that are furnished and installed by the Design/Build Mechanical Contractor.

C. The Design/Build Electrical Contractor and the Design/Build Mechanical Contractor are to verify, with the local authorities having jurisdiction, which HVAC equipment must be controlled by the Fire Alarm System and the sequence of control in the fire mode.

D. Flow, tamper & pressure switches for Sprinkler System shall be provided and installed by Fire Protection Contractor.

1.05 MISCELLANEOUS SYSTEM INTERFACE.

A. Heat trace calculations, provision of insulation and maintenance shall be by Mechanical and Fire Protection subcontractors. Heat tracing will be provided and installed per the schedule. Heat tracing shall be rated for 277 volt wiring unless noted otherwise. Controllers shall be provided by the Mechanical and Fire Protection subcontractors. Controllers shall have integral GFCI Protection and (2) sets of alarm dry contacts.

1.06 MECHANICAL - ELECTRICAL INTERFACE

A. Unless otherwise indicated, equipment and controls are to be furnished, installed, and wired in accordance with the following schedule; coordinate all work with Division 23 - Mechanical.

B. Key Notes:

1. GC = General Contractor
2. M = Mechanical Contractor Division 23
3. E = Electrical Contractor Division 26
4. CC = Controls Contractor Division 23
5. FPC = Fire Protection Contractor Division 23
6. NA = Not Applicable to this project
7. NA = Not Applicable to this project
8. O = Owner
9. FA = FA Subcontractor Under Electrical Division
10. P = Plumbing Contractor Division 22

	Item	Furnished By	Installed By	Power Wiring By	Control Wiring By	Testing & Balancing By
1	Equipment Motors:	M	M	E	CC	M
2	Magnetic Motor Starters, automatically controlled with or without HOA switches	E	E	E	CC	M

	Item	Furnished By	Installed By	Power Wiring By	Control Wiring By	Testing & Balancing By
3	Magnetic Motor Starters, automatically controlled by FA System only.	E	E	E	E	M
4	Magnetic Motor Starters, manually controlled	E	E	E	E	M
5	Magnetic Motor Starters, furnished with mechanical equipment, factory mounted	M	M	E	MC/CC	M
6	Sail switches if required for positive air flow annunciation.	NA	NA	NA	NA	NA
7	Proofs to FA system for positive air flow annunciation on pressurization fan motor starters will be provided from contacts in the VFD's.	M	E	E	EC	E/M
8	Variable Frequency Drives w/ Integral Disconnects	M/CC	E	E	MC/CC	M
9	Disconnect switches (not mentioned otherwise) and 120-volt recepts.	E	E	E	--	--
10	Maintain NEC Code clearance around Factory installed disconnects.	M	M	NA	NA	NA
11	Disconnect switches, manual motor starters, thermal overload switches	E	E	E	NA	E/M
12	Div 23 Controls, valves, float controls, damper motors, other misc.	CC/M	CC/M	E	CC	M
13	Div 23 Controls, line voltage T-stats	t.b.d	E	E	E	M
14	Environmental Control Systems	CC	CC	E	CC	CC/M
34	Water Heaters	P	P	E	CC	P
35	Hot Water Circulation Pump Motor Starters- Packaged	P	E	E	CC	P
36	Concrete Pad for TI Generator Fuel Tank	NA	NA	NA	NA	NA
42	Heat Trace for Plumbing	P	E	E	NA	E
43	Heat Trace for Mechanical	M	E	E	NA	E
76	Magnetic Motor Starters, not furnished with equipment.	EC	EC	EC	MC/CC	MC

	Item	Furnished By	Installed By	Power Wiring By	Control Wiring By	Testing & Balancing By
77	Speed Controller for small exhaust fans	M	E	E	M	M
78	Mechanical Equipment not covered above	M	M	E	M	M
79	Shut down of mechanical equipment greater than 2000 CFM	M/E	M	E	E/FA	E/M/FA
82	Submetering, data acquisition and building display per Chapter 12 of SEC	E	E	E	M/CC	M/CC
83	Interconnecting wiring between sections for split cabinet mechanical equipment	M	M	M	M/CC	M/CC
84	SCCR Compliance with NEC for equipment	M	-	-	-	
85	Chapter 12 Metering head-end, programming, dashboard, and connection of all meters to BAS.	M/CC	M/CC	E	M/CC	M/CC

END OF SECTION

SECTION 26 05 19

LOW-VOLTAGE ELECTRICAL POWER CONDUCTORS AND CABLES

PART 1 - GENERAL

1.01 RELATED DOCUMENTS

A. Drawings and general provisions of the Contract, including General and Supplementary Conditions and Division 01 Specification Sections, apply to this Section.

1.02 SUBMITTALS

A. Product Data: For each type of product.

B. Field quality-control reports.

PART 2 - PRODUCTS

2.01 CONDUCTORS AND CABLES

A. Manufacturers: Subject to compliance with requirements, available manufacturers offering products that may be incorporated into the Work include, but are not limited to, the following:

1. Alcan Products Corporation; Alcan Cable Division.
2. Alpha Wire.
3. Belden Inc.
4. Encore Wire Corporation.
5. General Cable Technologies Corporation.
6. Southwire Incorporated.
7. Or approved equal.

B. Copper Conductors: Comply with NEMA WC 70/ICEA S-95-658.

C. Conductor Insulation: Comply with NEMA WC 70/ICEA S-95-658 and UL 83 for Type THW-2, Type THHN-THWN, and UL 44 for Type XHHW-2.

D. Multi-conductor Cable: Comply with NEMA WC 70/ICEA S-95-658 for metal-clad cable, Type MC with ground wire.

E. Fire Rated Cable: Compliant with application.

1. Underwriter's Laboratories Circuit Integrity Systems FHIT 120. Type RHW in compatible raceway (horizontal runs only).

2. Underwriter's Laboratories Fire Resistive Cable (FHJR). Mineral Insulated Cable. Complete with mounting provisions, termination, and isolation appurtenances.

3. MC Cable, 90C Certified to UL 2196, FHIT 120 minutes. Suitable for horizontal and vertical applications.

2.02 CONNECTORS AND SPLICES

A. Manufacturers: Subject to compliance with requirements, available manufacturers offering products that may be incorporated into the Work include, but are not limited to, the following:

1. AFC Cable Systems, Inc.

2. Gardner Bender.

3. Hubbell Power Systems, Inc.

4. Ideal Industries, Inc.

5. Ilsco; a branch of Bardes Corporation.

6. NSi Industries LLC.

7. O-Z/Gedney; a brand of the EGS Electrical Group.

8. 3M; Electrical Markets Division.

9. Tyco Electronics.

10. Or approved equal.

B. Description: UL listed, factory-fabricated connectors and splices of size, ampacity rating, material, type, and class for application and service indicated.

C. For #14 through #10 AWG wire sizes, provide insulated spring wire connectors or insulated compression connectors.

D. For #8 AWG wire, use solderless pressure connectors with insulating sleeves.

E. For #6 AWG and through #2, optional use split bolt connectors with manufactured insulation covers or tape sufficient to provide 150% insulation level.

F. For #6 and larger: Compression connectors using compression dies designed for the exact connector being terminated. Provide insulting sleeves manufactured specifically for the connector being used. Mechanical termination integral to overcurrent protective devices are also acceptable.

2.03 SYSTEM DESCRIPTION

A. Electrical Components, Devices, and Accessories: Listed and labeled as defined in NFPA 70, by a qualified testing agency, and marked for intended location and application.

B. Comply with NFPA 70.

PART 3 - EXECUTION

3.01 CONDUCTOR MATERIAL APPLICATIONS

A. Feeders: Copper. Solid for No. 10 AWG and smaller; stranded for No. 8 AWG and larger.

B. Branch Circuits: Copper. Solid for 10 AWG and smaller; stranded for 8 AWG and larger, except VFC cable, which shall be extra flexible stranded.

3.02 CONDUCTOR INSULATION AND MULTICONDUCTOR CABLE APPLICATIONS AND WIRING METHODS

C. Service Entrance: Type XHHW-2, single conductors in raceway installed underground.

D. Exposed Feeders and Branch Circuits: Type THHN-THWN, single conductors in raceway.

E. Feeders and Branch Circuits Concealed in Ceilings, Walls, Partitions, and Crawlspaces: Type THHN-THWN, single conductors in raceway**.**

F. Feeders and Branch Circuits Concealed in below grade concrete walls, below Slabs-on-Grade, and Underground: Type XHHW-2, single conductors in raceway.

G. Feeder and Branch Circuits exposed above roofing: XHHW-2.

H. Feeders Installed below Raised Flooring: Type THHN-THWN, single conductors in raceway.

I. Fire Rated Feeders: Mineral-insulated, metal-sheathed cable, Type MI. Installed within the limitations of the product listing and in accordance with manufacturer's instruction. Routing shall provide access for maintenance. Rigidly secure manufacturer's cable supports to structure.

J. Cord Drops and Portable Appliance Connections: Type SO, hard service cord with stainless-steel, wire-mesh, strain relief device at terminations to suit application.

K. Variable Frequency Controller Output Circuits: Type XHHW-2 in metal conduit.

3.03 INSTALLATION OF CONDUCTORS AND CABLES

A. Conceal cables in finished walls, ceilings, and floors unless otherwise indicated.

B. Complete raceway installation between conductor and cable termination points according to Section 26 05 33 "Raceways and Boxes for Electrical Systems" prior to pulling conductors and cables.

C. Use manufacturer-approved pulling compound or lubricant where necessary; compound used must not deteriorate conductor or insulation. Do not exceed manufacturer's recommended maximum pulling tensions and sidewall pressure values.

D. Use pulling means, including fish tape, cable, rope, and basket-weave wire/cable grips, that will not damage cables or raceway.

E. Install exposed cables parallel and perpendicular to surfaces of exposed structural members, and follow surface contours where possible.

F. Support cables according to Section 26 05 29 "Hangers and Supports for Electrical Systems."

G. Complete cable tray systems installation according to Section 26 05 36 "Cable Trays for Electrical Systems" prior to installing conductors and cables.

3.04 CONNECTIONS

A. Tighten electrical connectors and terminals according to manufacturer's published torque-tightening values. If manufacturer's torque values are not indicated, use those specified in UL 486A-486B.

B. Make splices, terminations, and taps that are compatible with conductor material and that possess equivalent or better mechanical strength and insulation ratings than unspliced conductors.

1. Use oxide inhibitor in each splice, termination, and tap for aluminum conductors.

C. Wiring at Outlets: Install conductor at each outlet, with at least 6 inches of slack.

3.05 IDENTIFICATION

A. Identify and color-code conductors and cables according to Section 26 05 53 "Identification for Electrical Systems."

B. Identify each spare conductor at each end with identity number and location of other end of conductor, and identify as spare conductor.

3.06 PENETRATIONS

A. Penetrate fire barriers, smoke barriers, vapor barriers, roofing materials and other rated architectural elements in a manner that preserves the rating of the architectural element.

B. Apply firestopping to electrical penetrations of fire-rated floor and wall assemblies to restore original fire-resistance rating of assembly.

3.07 FIELD QUALITY CONTROL

C. Testing Agency: Engage a qualified testing agency to perform tests and inspections.

D. Manufacturer's Field Service: Engage a factory-authorized service representative to test and inspect components, assemblies, and equipment installations, including connections.

E. Perform the following tests and inspections:

1. Perform each visual and mechanical inspection and electrical test stated in NETA Acceptance Testing Specification. Certify compliance with test parameters.

2. Infrared Scanning: After Substantial Completion, but not more than 60 days after Final Acceptance, perform an infrared scan of each splice in conductors No. 3 AWG and larger. Remove box and equipment covers so splices are accessible to portable scanner. Correct deficiencies determined during the scan.
   a. Follow-up Infrared Scanning: Perform an additional follow-up infrared scan of each splice 11 months after date of Substantial Completion.

b. Instrument: Use an infrared scanning device designed to measure temperature or to detect significant deviations from normal values. Provide calibration record for device.

c. Record of Infrared Scanning: Prepare a certified report that identifies splices checked and that describes scanning results. Include notation of deficiencies detected, remedial action taken and observations after remedial action.

F. Test and Inspection Reports: Prepare a written report to record the following:

1. Procedures used.

2. Results that comply with requirements.

3. Results that do not comply with requirements and corrective action taken to achieve compliance with requirements.

G. Cables will be considered defective if they do not pass tests and inspections.

END OF SECTION

SECTION 26 05 26

GROUNDING AND BONDING FOR ELECTRICAL SYSTEMS

PART 1 - GENERAL

1.01 RELATED DOCUMENTS

A. Drawings and general provisions of the Contract, including General and Supplementary Conditions and Division 01 Specification Sections, apply to this Section.

1.02 SUBMITTALS

A. Product Data: For each type of product indicated.

B. Plans showing dimensioned as-built locations of grounding features specified in "Field Quality Control" Article, including the following:

1. Test wells.

2. Ground rods.

3. Ground rings.

4. Grounding arrangements and connections for separately derived systems.

5. Grounding for sensitive electronic equipment.

C. Field quality-control reports.

D. Operation and Maintenance Data: For grounding to include in emergency, operation, and maintenance manuals. In addition to items specified in Division 01 Section "Operation and Maintenance Data," include the following:

PART 2 - PRODUCTS

2.01 GENERAL

A. Electrical Components, Devices, and Accessories: Listed and labeled as defined in NFPA 70, by a qualified testing agency, and marked for intended location and application.

B. Comply with UL 467 for grounding and bonding materials and equipment.

2.02 CONDUCTORS

A. Insulated Conductors: Copper wire or cable insulated for 600 V unless otherwise required by applicable Code or authorities having jurisdiction.

B. Bare Copper Conductors:

1. Solid Conductors: ASTM B 3.

2. Stranded Conductors: ASTM B 8.

3. Tinned Conductors: ASTM B 33.

C. Grounding Bus: Predrilled rectangular bars of annealed copper, 1/4 by 4 inches in cross section, with 9/32-inch holes spaced 1-1/8 inches apart. Stand-off insulators for mounting shall comply with UL 891 for use in switchboards, 600 V. Lexan or PVC, impulse tested at 5000 V.

2.03 CONNECTORS

A. Listed and labeled by an NRTL acceptable to authorities having jurisdiction for applications in which used and for specific types, sizes, and combinations of conductors and other items connected.

B. Bolted Connectors for Conductors and Pipes: Copper or copper alloy, pressure type with at least two bolts.

1. Pipe Connectors: Clamp type, sized for pipe.

C. Welded Connectors: Exothermic-welding kits of types recommended by kit manufacturer for materials being joined and installation conditions.

D. Bus-bar Connectors: Mechanical type, cast silicon bronze, solder less compression-type wire terminals, and long-barrel, two-bolt connection to ground bus bar.

2.04 GROUNDING ELECTRODES

A. Ground Rods: Copper-clad steel**;** 3/4-inch diameter by 10 feet.

PART 3 - EXECUTION

3.01 APPLICATIONS

A. Provide grounding and bonding required by NFPA 70, as adopted by the local authority having jurisdiction. Detailed aspects of code requirements for grounding and bonding may not be indicated within the contract documents, however, all aspects of code compliance are the responsibility of the contractor.

B. Conductors: Install solid conductor for No.10 AWG and smaller, and stranded conductors for larger unless otherwise indicated.

C. Underground Grounding Conductors: Install bare copper conductor, No.2/0 AWG minimum.

1. Bury at least 24 inches below grade.

D. Isolated Grounding Conductors: Green-colored insulation with continuous yellow stripe. On feeders with isolated ground, identify grounding conductor where visible to normal inspection, with alternating bands of green and yellow tape, with at least three bands of green and two bands of yellow.

E. Grounding Bus: Install in electrical and telephone equipment rooms, in rooms housing service equipment, and elsewhere as indicated.

1. Install bus on insulated spacers 2 inches minimum from wall, 6 inches above finished floor unless otherwise indicated.

2. Where indicated on both sides of doorways, route bus up to top of door frame, across top of doorway, and down to specified height above floor; connect to horizontal bus.

F. Conductor Terminations and Connections:

1. Pipe and Equipment Grounding Conductor Terminations: Bolted connectors.

2. Underground Connections: Welded connectors except at test wells and as otherwise indicated.

3. Connections to Ground Rods at Test Wells: Bolted connectors.

4. Connections to Structural Steel: Welded connectors.

3.02 UNDERGROUND DISTRIBUTION SYSTEM

A. Comply with IEEE C2 grounding requirements.

B. Grounding Manholes and Handholes: Install a driven ground rod through manhole or handhole floor, close to wall, and set rod depth so 4 inches will extend above finished floor. If necessary, install ground rod before manhole is placed and provide No. 1/0 AWG bare, tinned-copper conductor from ground rod into manhole through a waterproof sleeve in manhole wall. Protect ground rods passing through concrete floor with a double wrapping of pressure-sensitive insulating tape or heat-shrunk insulating sleeve from 2 inches above to 6 inches below concrete. Seal floor opening with waterproof, nonshrink grout. Bond ground rod to duct bank grounding conductors.

C. Grounding Connections to Metal Parts: Bond exposed-metal parts such as lid, inserts, cable racks, pulling irons, ladders, and cable shields within each manhole or handhole, to ground rod or grounding conductor. Make connections with No. 4 AWG minimum, stranded, hard-drawn copper bonding conductor. Train conductors level or plumb around corners and fasten to manhole walls. Connect to cable armor and cable shields according to written instructions by manufacturer of splicing and termination kits.

D. Pad-Mounted Transformers and Switches: Install two ground rods and ground ring around the pad. Ground pad-mounted equipment and noncurrent-carrying metal items associated with substations by connecting them to underground cable and grounding electrodes. Install tinned-copper conductor not less than No. 2 AWG for ground ring and for taps to equipment grounding terminals. Bury ground ring not less than 6 inches from the foundation.

3.03 EQUIPMENT GROUNDING

A. Install insulated equipment grounding conductors with all feeders and branch circuits.

B. Isolated Grounding Receptacle Circuits: Install an insulated equipment grounding conductor connected to the receptacle grounding terminal. Isolate conductor from raceway and from panelboard grounding terminals. Terminate at equipment grounding conductor terminal of the applicable derived system or service unless otherwise indicated.

C. Isolated Equipment Enclosure Circuits: For designated equipment supplied by a branch circuit or feeder, isolate equipment enclosure from supply circuit raceway with a nonmetallic raceway fitting listed for the purpose. Install fitting where raceway enters enclosure, and install a separate insulated equipment grounding conductor. Isolate conductor from raceway and from panelboard grounding terminals. Terminate at equipment grounding conductor terminal of the applicable derived system or service unless otherwise indicated.

D. Signal and Communication Equipment: In addition to grounding and bonding required by NFPA 70, provide a separate grounding system complying with requirements in TIA/ATIS J-STD-607-A.

1. For telephone, alarm, voice and data, and other communication equipment, provide No. 4 AWG minimum insulated grounding conductor in raceway from grounding electrode system to each service location, terminal cabinet, wiring closet, and central equipment location.

2. Service and Central Equipment Locations and Wiring Closets: Terminate grounding conductor on a 1/4-by-4-by-12-inch grounding bus.

3. Terminal Cabinets: Terminate grounding conductor on cabinet grounding terminal.

E. Poles Supporting Outdoor Lighting Fixtures: Install grounding electrode in addition to grounding conductor installed with branch-circuit conductors.

3.04 INSTALLATION

A. Grounding Conductors: Route along shortest and straightest paths possible unless otherwise indicated or required by Code. Avoid obstructing access or placing conductors where they may be subjected to strain, impact, or damage.

B. Ground Bonding Common with Lightning Protection System: Comply with NFPA 780 and UL 96 when interconnecting with lightning protection system. Bond electrical power system ground directly to lightning protection system grounding conductor at closest point to electrical service grounding electrode. Use bonding conductor sized same as system grounding electrode conductor, and install in conduit.

C. Ground Rods: Drive rods until tops are 2 inches below finished floor or final grade unless otherwise indicated.

1. Interconnect ground rods with grounding electrode conductor below grade and as otherwise indicated. Make connections without exposing steel or damaging coating if any.

2. For grounding electrode system, install at least three rods spaced at least one-rod length from each other and located at least the same distance from other grounding electrodes, and connect to the service grounding electrode conductor.

D. Test Wells: Ground rod driven through drilled hole in bottom of handhole. Handholes are specified in Division 26 Section "Underground Ducts and Raceways for Electrical Systems," and shall be at least 12 inches deep, with cover.

1. Test Wells: Install at least one test well for each service unless otherwise indicated. Install at the ground rod electrically closest to service entrance. Set top of test well flush with finished grade or floor.

E. Bonding Straps and Jumpers: Install in locations accessible for inspection and maintenance except where routed through short lengths of conduit.

1. Bonding to Structure: Bond straps directly to basic structure, taking care not to penetrate any adjacent parts.

2. Bonding to Equipment Mounted on Vibration Isolation Hangers and Supports: Install bonding so vibration is not transmitted to rigidly mounted equipment.

3. Use exothermic-welded connectors for outdoor locations; if a disconnect-type connection is required, use a bolted clamp.

F. Grounding and Bonding for Piping:

1. Metal Water Service Pipe: Install insulated copper grounding conductors, in conduit, from building's main service equipment, or grounding bus, to main metal water service entrances to building. Connect grounding conductors to main metal water service pipes; use a bolted clamp connector or bolt a lug-type connector to a pipe flange by using one of the lug bolts of the flange. Where a dielectric main water fitting is installed, connect grounding conductor on street side of fitting. Bond metal grounding conductor conduit or sleeve to conductor at each end.

2. Water Meter Piping: Use braided-type bonding jumpers to electrically bypass water meters. Connect to pipe with a bolted connector.

3. Bond each aboveground portion of gas piping system downstream from equipment shutoff valve.

G. Grounding for Steel Building Structure: Install a driven ground rod at base of each corner column and at intermediate exterior columns at distances not more than 60 feet apart. Bond rods together.

H. Ground Ring: Install a grounding conductor, electrically connected to each building structure ground rod and to each steel column, extending around the perimeter of building.

1. Install bare copper conductor not less than No. 3/0 AWG for ground ring and for taps to building steel.

2. Bury ground ring not less than 24 inches from building's foundation.

I. Ufer Ground:

1. Provide Ufer grounding electrode.

2. Bond grounding conductor to reinforcing steel in at least four locations and to anchor bolts. Extend grounding conductor below grade and connect to building's grounding grid or to grounding electrode external to concrete.

3.05 LABELING

A. Comply with requirements in Division 26 Section "Identification for Electrical Systems" Article for instruction signs. The label or its text shall be green.

B. Install labels at the telecommunications bonding conductor and grounding equalizer and at the grounding electrode conductor where exposed.

1. Label Text: "If this connector or cable is loose or if it must be removed for any reason, notify the facility manager."

3.06 TESTING

A. Tests and Inspections:

1. After installing grounding system but before permanent electrical circuits have been energized, test for compliance with requirements.

2. Inspect physical and mechanical condition. Verify tightness of accessible, bolted, electrical connections with a calibrated torque wrench according to manufacturer's written instructions.

3. Grounding Electrodes;

a. Test completed grounding system at service disconnect and at ground test wells. Perform tests by fall-of-potential method according to IEEE 81.
b. Provide a supplemental grounding electrode where system ground resistance exceeds 10 ohms and retest. If resistance to ground still exceeds specified values, notify Architect promptly and include recommendations to reduce ground resistance.

B. Grounding system will be considered defective if it does not pass tests and inspections.

C. Prepare test and inspection reports.

3.07 GROUNDING ELECTRODES

A. Provide as shown and/or required. Connect the grounding electrode conductor to each grounding electrode.

3.08 SIZE OF GROUND WIRE

A. As required by National Electric Code. Where ground wire is exposed to physical damage protect with rigid non-ferrous conduit as permitted by applicable code.

3.09 GROUND CONNECTION OF PIPING

A. Metal internal piping shall be grounded.

3.10 CONNECTION TO THE POWER GROUND BUS

A. Furnish and install connections in accordance with the codes; including but not limited to:

1. Raceway system
2. Switchboard
3. Service neutral
4. "Separately derived system" (transformer or emergency power supply)
5. Electrically operated equipment and devices.

B. No device or equipment shall be connected for electrical service which has a neutral conductor connected to a grounding conductor or to the frame within the device or equipment.

3.11 METHOD OF CONNECTIONS

A. Make all ground connections and ground cable splices by thermal welding or copper compression set type connectors U.L. listed for grounding purposes. Grounding lugs, where provided as standard manufacturer's items on equipment furnished, may be used.

3.12 EXPANSION FITTINGS

A. In conduit runs requiring an expansion fitting, a bonding jumper shall be installed around the fitting to maintain continuous ground continuity. Jumper shall allow for maximum movement of the fitting.

3.13 GROUND CABLE CROSSING EXPANSION JOINTS

A. Ground cables crossing expansion joints or similar separations in structures or paved areas shall be protected from damage by means of suitable approved devices or methods of installation which will provide the necessary slack in the cable across the joint to permit movement. Stranded or other approved flexible copper run or jumper shall be used across such separations.

3.14 GROUNDING FOR FEEDERS

A. Provide a grounding bushing with ground conductor sized in accordance with NEC table 250.122 to the grounding bus in the panelboard and switchboards.

3.15 PANELBOARD BONDING

A. Provide a bonding conductor not smaller than #10 AWG between the ground bus in the normal and emergency panels and/ or two or more emergency panelboards fed from separate transfer switches, serving the same individual patient vicinity in accordance with NEC 517.14.

END OF SECTION

SECTION 26 05 29

HANGERS AND SUPPORTS FOR ELECTRICAL SYSTEMS

PART 1 - GENERAL

1.01 RELATED DOCUMENTS

A. Drawings and general provisions of the Contract, including General and Supplementary Conditions and Division 01 Specification Sections, apply to this Section.

B. Section 26 05 48 - "Seismic Controls for Electrical Systems" for products and installation requirements necessary for compliance with seismic criteria.

1.02 SUMMARY

A. This Section includes the following:

1. Hangers and supports for electrical equipment and systems.

2. Concrete bases (housekeeping pads) for electrical equipment.

1.03 REFERENCES

A. ASTM A325: American Society for Testing and Materials - Standard Specification for Structural Bolts.

B. ASTM A603: American Society for Testing and Materials - Standard Specification for Zinc-Coated Steel Structural Wire Rope.

C. IBC: International Building Code. as adopted and amended by local jurisdiction.

D. ICC: International Code Council.

E. MFMA-3: Metal Framing Manufacturers Association's Metal Framing Standards Publication.

F. MSS SP-58: Manufacturers Standardization Society of the Valve and Fittings Industry Standard for Pipe Hangers and Supports - Materials, Design, and Manufacture.

G. NECA 1: National Electrical Contractors Association Standard Practices for Good Workmanship in Electrical Contracting.

H. OSHPD: State of California, Office of Statewide Health Planning and Development.

1.04 DEFINITIONS

A. EMT: Electrical metallic tubing.

B. IMC: Intermediate metal conduit.

C. RMC: Rigid metal conduit.

1.05 PERFORMANCE REQUIREMENTS

A. Delegated Design: Design supports for raceways, including comprehensive engineering analysis by a qualified professional engineer, registered in the same state as the project, using appropriate performance requirements and design criteria. Refer to: Section 26 05 48 "Seismic Controls for Electrical Systems".

1. Design supports for raceways capable of supporting combined weight of supported systems and its contents plus 25% spare space capacity.

2. Design equipment supports capable of supporting combined operating weight of supported equipment and connected systems and components.

B. Rated Strength: Adequate in tension, shear, and pullout force to resist maximum loads calculated or imposed for this Project, with a minimum structural safety factor of five times the applied force.

1.06 SUBMITTALS

A. Product Data: For the following:

1. Steel slotted support systems.

2. Nonmetallic slotted support systems.

B. Shop Drawings: Show fabrication and installation details.

1. Trapeze hangers. Include Product Data for components.

2. Steel slotted channel systems. Include Product Data for components.

3. Nonmetallic slotted channel systems. Include Product Data for components.

4. Equipment supports.

C. Seismic Data: Signed and sealed by a qualified professional engineer and associated structural calculations. Coordinate with submittal requirements of Section 26 05 48 "Seismic Controls for Electrical Systems".

1.07 COORDINATION

A. Coordinate size and location of concrete bases. Cast anchor-bolt inserts into bases. Concrete, reinforcement, and formwork requirements are specified in Division 03.

B. Coordinate installation of roof curbs, equipment supports, and roof penetrations. These items are specified in Division 07 Section "Roof Accessories."

PART 2 - PRODUCTS

2.01 SUPPORT, ANCHORAGE, AND ATTACHMENT COMPONENTS

A. Steel Slotted Support Systems: Comply with MFMA-4, factory-fabricated components for field assembly.

1. Manufacturers: Subject to compliance with requirements, provide products by one of the following:

   a. Allied Tube & Conduit.

   b. Cooper B-Line, Inc.; a division of Cooper Industries.

   c. ERICO International Corporation.

   d. GS Metals Corp.

   e. Thomas & Betts Corporation.

   f. Unistrut; Tyco International, Ltd.

   g. Wesanco, Inc.

   h. Or approved equal.

2. Finishes:

   a. Plated Coatings: Zinc Plated. Fitting and accessories - zinc plated

   b. Metallic Coatings: Hot-dip galvanized after fabrication and applied according to MFMA-3. Fitting and accessories - hot-dip galvanized or stainless steel where hot-dip galvanized is not available.

c. Nonmetallic Coatings: Manufacturer's standard PVC, polyurethane, or polyester coating applied according to MFMA-4. Fitting and accessories - PVC coated or stainless steel where PVC coated is not available.

d. High Performance Coatings: Manufacturer's standard epoxy or acrylic coating applied according to MFMA-4.

3. Channel Dimensions: Selected for applicable load criteria.

B. Aluminum Slotted Support Systems: Structural-grade, factory-formed, aluminum channels and angles. Comply with MFMA-3, factory-fabricated components.

1. Manufacturers: Subject to compliance with requirements, provide products by one of the following:

a. Allied Tube & Conduit.

b. Cooper B-Line, Inc.; a division of Cooper Industries.

c. GS Metals Corp.

d. ERICO International Corporation.

e. Thomas & Betts Corporation.

f. Unistrut; Tyco International, Ltd.

g. Or approved equal.

2. Fittings and Accessories: Products of channel and angle manufacturer and designed for use with those items.

3. Fitting and Accessory Materials: Same as channels and angles

4. Rated Strength: Selected to suit structural loading and applicable seismic forces.

C. Nonmetallic Slotted Support Systems: Structural-grade, factory-formed channels and angles

D.

1. Manufacturers:

a. Allied Tube & Conduit.

b. Cooper B-Line, Inc.; a division of Cooper Industries.

c. Fabco Plastics Wholesale Limited.

d. Seasafe, Inc.

e. Or approved equal.

2. Fittings and Accessories: Products of channel and angle manufacturer and designed for use with those items.

3. Fitting and Accessory Materials: Same as channels and angles, except metal items may be stainless steel.

4. Rated Strength: Selected to suit structural loading and applicable seismic forces.

E. Raceway and Cable Supports: As described in NECA 1.

F. Conduit and Cable Support Devices: Steel hangers, clamps, and associated fittings, designed for types and sizes of raceway or cable to be supported.

G. Support for Conductors in Vertical Conduit: Factory-fabricated assembly consisting of threaded body and insulating wedging plug or plugs for non-armored electrical conductors or cables in riser conduits. Plugs shall have number, size, and shape of conductor gripping pieces as required to suit individual conductors or cables supported. Body shall be malleable iron.

H. Structural Steel for Fabricated Supports and Restraints: ASTM A 36/A 36M, steel plates, shapes, and bars; black and galvanized.

I. Mounting, Anchoring, and Attachment Components: Items for fastening electrical items or their supports to building surfaces include the following:

1. Powder-Actuated Fasteners: Threaded-steel stud, for use in hardened portland cement concrete, steel, or wood, with tension, shear, and pullout capacities appropriate for supported loads and building materials where used.

a. Manufacturers: Subject to compliance with requirements, provide products by one of the following:

1) Hilti Inc.

2) ITW Ramset/Red Head; a division of Illinois Tool Works, Inc.

3) MKT Fastening, LLC.

4) Simpson Strong-Tie Co., Inc.; Masterset Fastening Systems Unit.

5) Or approved equal.

2. Mechanical-Expansion Anchors: Insert-wedge-type, zinc-coated steel, for use in hardened portland cement concrete with tension, shear, and pullout capacities appropriate for supported loads and building materials in which used.

a. Manufacturers: Subject to compliance with requirements, provide products by one of the following:

1) Cooper B-Line, Inc.; a division of Cooper Industries.

2) Empire Tool and Manufacturing Co., Inc.

3) Hilti Inc.

4) ITW Ramset/Red Head; a division of Illinois Tool Works, Inc.

5) MKT Fastening, LLC.

6) Or approved equal.

3. Concrete Inserts: Steel or malleable-iron, slotted support system units similar to MSS Type 18; complying with MFMA-4 or MSS SP-58.

4. Clamps for Attachment to Steel Structural Elements: MSS SP-58, type suitable for attached structural element.

5. Through Bolts: Structural type, hex head, and high strength. Comply with ASTM A 325.

6. Toggle Bolts: All-steel springhead type.

7. Hanger Rods: Threaded steel.

2.02 FABRICATED METAL EQUIPMENT SUPPORT ASSEMBLIES

A. Description: Welded or bolted, structural-steel shapes, shop or field fabricated to fit dimensions of supported equipment.

B. Materials: Comply with requirements in Division 05 Section "Metal Fabrications" for steel shapes and plates.

PART 3 - EXECUTION

3.01 SUPPORT INSTALLATION -GENERAL

A. Comply with NECA 1 and NECA 101 for installation requirements except as specified in this Article.

B. Strength of Support Assemblies: Where not indicated, select sizes of components so strength will be adequate to carry present and future static loads within specified loading limits. Minimum static design load used for strength determination shall be weight of supported components plus 50% of load.

C. Mounting and Anchorage of Surface-Mounted Equipment and Components: Anchor and fasten electrical items and their supports to building structural elements by the following methods unless otherwise indicated by code:

1. To Wood: Fasten with lag screws or through bolts.

2. To New Concrete: Bolt to concrete inserts or use expansion anchor fasteners.

3. To Masonry: Approved toggle-type bolts on hollow masonry units and expansion anchor fasteners on solid masonry units.

4. To Existing Concrete: Expansion anchor fasteners.

5. Instead of expansion anchors, powder-actuated driven threaded studs provided with lock washers and nuts may be used in existing standard-weight concrete 4 inches thick or greater. Do not use for anchorage to lightweight-aggregate concrete or for slabs less than 4 inches thick.

6. To Steel: Beam clamps (MSS Type 19, 21, 23, 25, or 27) complying with MSS SP-69.

7. To Light Steel: Sheet metal screws.

8. Items Mounted on Hollow Walls and Nonstructural Building Surfaces: Mount cabinets, panelboards, disconnect switches, control enclosures, pull and junction boxes, transformers, and other devices on slotted-channel racks attached to substrate.

D. Drill holes for expansion anchors in concrete at locations and to depths that avoid reinforcing bars.

3.02 HANGERS AND SUPPORTS FOR RACEWAYS

A. Maximum Support Spacing and Minimum Hanger Rod Size for Raceway: Space supports for EMT, IMC, and RMC as scheduled in NECA 1, where Table 1 lists maximum spacings less than stated in NFPA 70. Minimum rod size shall be 1/4 inch in diameter.

B. Suspended ceiling systems: Do not attach raceways to ceiling suspension system hangers.

C. Raceways 3/4" (20mm) and smaller serving equipment located within ceiling cavity or mounted on or supported by the ceiling grid system may be supported by dedicated #12 ga. galvanized, soft annealed mild steel wire hangers. Two raceways maximum per hanger. Attach raceways to wires with clips manufactured for the purpose.

D. Raceways 1" and larger: Provide lay-in pipe hangers on 1/4" (6mm) or larger all threaded rods attached to metal ceiling inserts or to structural members at not greater than spacing noted above and within 12" (300mm) of each change in direction.

E. Multiple Raceways or Cables: When more than two raceways will use the same routing, group together on a channel trapeze support system supported by threaded rods attached to metal ceiling inserts or structural members. Size supports for multiple raceways for 25% future capacity. Trapeze shall be sized in accordance with SMACNA Guidelines with conduit weight taken to be as listed for same size pipe filled of water.

   1. Secure raceways and cables to these supports with single-bolt conduit clamps.

3.03 VERTICAL CABLE SUPPORTS

A. Provide cable support for vertical cable runs as required by NFPA 70.

3.04 SUPPORT FOR LIGHT FIXTURES

A. Provide support system designed by registered engineer for all light fixtures over 50 pounds.

B. Recessed mounted type fixtures less than 20 pounds installed in lay-in ceiling: Provide four support clips, Caddy #515 or similar , (one each corner) which lock light fixture to ceiling tees after light fixture is installed. In addition, provide for each light fixture two #14 earthquake chains or #12 wires secured located at diagonally opposite fixture corners and attached to structural members above suspended ceiling.

C. Recessed mounted type fixtures less than 50 pounds installed in lay-in ceiling: Provide four support clips, Caddy #515 or similar , (one each corner) which lock light fixture to ceiling tees after light fixture is installed. In addition, provide for each light fixture four #14 earthquake chains or #12 wires (one in each corner) installed taut and secured to structural members above suspended ceiling.

D. Recessed mounted type fixtures installed in plaster or gypsum ceiling. Provide support chains or wires similar to lay-in ceiling requirements except also provide plaster frame compatible with light fixture. Attach support wires/chains to plaster frame.

E. Surface mounted type fixtures less than 50 pounds installed on suspended ceilings: Provide metal carrying channels above suspended ceiling spanning between ceiling support channels. Attached fixture through ceiling to carrying channels. In addition, provide for each light fixture four #14 earthquake chains or #12 wires installed taut from metal carrying channels to structural members above suspended ceiling.

F. Surface mounted type fixtures less than 20 pounds installed on suspended ceilings: Provide support frame above suspended ceiling. Attached fixture through ceiling to support frame. In addition, provide for each light fixture two #14 earthquake chains or #12 wires secured located at diagonally opposite fixture corners of plaster frame secured to structural members above suspended ceiling.

G. Surface mounted type fixtures less than 50 pounds designed to be supported from fixture junction box:

1. Provide hanger bars between structural members. Attach junction box directly to hanger bars.

2. Attach heavy formed steel straps to the outlet box by means of threaded stems with locknuts, or directly to the outlet box where the light fixture is specifically so designed. Support junction box from structure with 1/4" threaded rod.

H. Pendant mounted type fixtures less than 50 pounds:

1. For fixtures with rigid pendants, provide swivel ball aligners at canopy.

2. Where mounted below suspended ceiling, support fixture from structural members above ceiling by means of minimum 1/4" threaded stems with locknuts.

3.05 SUPPORT FOR TRANSFORMERS

A. See Section 26 05 48 for transformer vibration isolation requirements.

B. Floor mounting

1. Provide concrete base (housekeeping pad).

2. Secure transformer to floor with bolts having pull-out rating equal to the weight of the transformer or greater. All attachment nuts to have split and flat washer.

C. Suspended Mounting

1. Enclosures designed for floor mounting, where suspended from structure, shall be suspended via trapeze constructed of two (minimum) horizontal structural channels hung via steel threaded rods attached to structural members or inserts in structural slab. Each rod to contain combination isolator ceiling hanger. Locking type nuts shall be used in assembly.

2. Provide cable sway bracing sized to resist a horizontal force of 162% of the operating weight acting in any direction for normal power transformers and 212% of the operating weight for emergency power transformers.

3. Channel, rod, cable, ceiling hanger and inserts shall be sized for not less than 400% load safety factor.

D. Wall Mounting of transformers less than 400 pounds

1. On concrete and block walls, secure wall mounted types, or floor mounted types with wall brackets and appropriate anchors. For gypsum wall construction provide independent steel channel supports, secured to floor.

2. Size brackets and anchors to give 400% safety factor. Submit shop drawing of manufacturer's standard bracket or proposed channel assembly.

3.06 INSTALLATION OF FABRICATED METAL SUPPORTS

A. Comply with installation requirements in Division 05 Section "Metal Fabrications" for site-fabricated metal supports.

B. Cut, fit, and place miscellaneous metal supports accurately in location, alignment, and elevation to support and anchor electrical materials and equipment.

C. Field Welding: Comply with AWS D1.1/D1.1M.

3.07 CONCRETE BASES

A. Construct concrete bases of dimensions indicated but not less than 4 inches larger in both directions than supported unit, and so anchors will be a minimum of 10 bolt diameters from edge of the base.

B. Use 3000-psi, 28-day compressive-strength concrete. Concrete materials, reinforcement, and placement requirements are specified in Division 03 Section "Cast-in-Place Concrete".

C. Anchor equipment to concrete base.

1. Place and secure anchorage devices. Use supported equipment manufacturer's setting drawings, templates, diagrams, instructions, and directions furnished with items to be embedded.

2. Install anchor bolts to elevations required for proper attachment to supported equipment.

3. Install anchor bolts according to anchor-bolt manufacturer's written instructions.

3.08 COATINGS

A. Touchup: Clean field cuts, field welds and abraded areas of PVC, Epoxy and Acrylic coated products. Re-coat exposed areas immediately after erecting hangers and supports. Follow manufacturer's instructions for repair of coated products.

B. Hot Dip Galvanized Surfaces: Clean welds, bolted connections, and abraded areas and apply galvanizing-repair paint to comply with ASTM A 780.

END OF SECTION

SECTION 26 05 33

RACEWAYS AND BOXES

PART 1 - GENERAL

1.01 RELATED DOCUMENTS

A. Drawings and general provisions of the Contract, including General and Supplementary Conditions and Division 01 Specification Sections, apply to this Section.

1.02 DEFINITIONS

A. AASHTO American Association of State Highway and Transportation Officials

B. ARC: Aluminum rigid conduit.

C. EMT: Electrical metallic tubing.

D. EPDM: Ethylene-propylene-diene terpolymer rubber.

E. FMC: Flexible metal conduit

F. GRC: Galvanized rigid steel conduit.

G. IMC: Intermediate metal conduit.

H. LFMC: Liquid tight flexible metal conduit.

I. LFNC: Liquidtight flexible nonmetallic conduit.

J. NBR: Acrylonitrile-butadiene rubber.

K. RNC: Rigid nonmetallic conduit.

L. SCTE Society of Cable Telecommunications Engineers

1.03 SUBMITTALS

A. Product Data: For surface raceways, wireways and fittings, floor boxes, hinged-cover enclosures, cabinets, and handholes.

B. Shop Drawings: Include plans, elevations, sections, and attachment details, and attachments to other work for the following:

1. Custom enclosures and cabinets.

2. For handholes and boxes for underground wiring with any dimension in excess of 30 inches, include the following:

a. Duct entry provisions, including locations and duct sizes.

b. Frame and cover design.

c. Grounding details.

d. Dimensioned locations of cable rack inserts, and pulling-in and lifting irons.

e. Joint details.

C. Coordination Drawings: Conduit routing plans, drawn to scale, on which the following items are shown and coordinated with work of other trades, using input from installers of items involved:

1. Structural members in paths of conduit groups with common supports.

2. HVAC and plumbing items and architectural features in paths of conduit groups with common supports.

PART 2 - PRODUCTS

2.01 GENERAL

A. Listing and Labeling: Products shall be listed and labeled as defined in NFPA 70, by a qualified testing agency, and marked for intended location and application.

B. Comply with NFPA 70 requirements.

C. Minimum Raceway Size: 1/2-inch trade size.

2.02 METAL CONDUITS, TUBING, AND FITTINGS

A. Manufacturers: Subject to compliance with requirements, provide products by one of the following

1. AFC Cable Systems, Inc.

2. Alflex Inc.

3. Allied Tube & Conduit; a Tyco International Ltd. Co.

4. Anamet Electrical, Inc.; Anaconda Metal Hose.

5. Electri-Flex Company.

6. Eaton

7. Maverick Tube Corporation.

8. O-Z/Gedney – Emerson

9. Western Tube and Conduit Corporation.

10. Wheatland Tube Company; a division of John Maneely Company.

11. Or approved equal.

B. Conduit

1. GRC: Comply with ANSI C80.1 and UL 6. Hot dipped zinc galvanized.

2. ARC: Comply with ANSI C80.5 and UL 6A.

3. IMC: Comply with ANSI C80.6 and UL 1242.

4. FMC: Comply with UL 1; zinc-coated steel or aluminum.

5. LFMC: Flexible steel conduit with PVC jacket and complying with UL 360.

6. Fittings: Comply with NEMA FB 1 and UL 514B.

   a. Hazardous (Classified) Locations: Comply with UL 886 and NFPA 70.

   b. Material: Match conduit material.

   c. Type: Threaded, compression or split.

7. Joint Compound: Approved, as defined in NFPA 70, by authorities having jurisdiction for use in conduit assemblies, and compounded for use to lubricate and protect threaded conduit joints from corrosion and to enhance their conductivity.

C. EMT: Comply with ANSI C80.3 and UL 797.

1. Couplings: Setscrew or compression. Steel. May be constructed integral with tubing.

2. Indentor, Tap On, and Die Cast fittings are not acceptable.

D. Deflection/Expansion Fittings: Comply with UL 651, rated for environmental conditions where installed, and including flexible internal or external bonding jumper.

2.03 NONMETALLIC CONDUIT AND FITTINGS

A. Manufacturers: Subject to compliance with requirements, provide products by one of the following

1. AFC Cable Systems, Inc.

2. Anamet Electrical, Inc.

3. Arnco Corporation.

4. Carlon

5. CANTEX Inc.

6. CertainTeed Corp.

7. Condux International, Inc.

8. ElecSYS, Inc.

9. Electri-Flex Company.

10. Lamson & Sessions; Carlon Electrical Products.

11. Manhattan/CDT/Cole-Flex.

12. RACO; a Hubbell company.

13. Thomas & Betts Corporation

14. Or approved equal.

B. RNC

1. Complying with NEMA TC 2 and UL 651. Type EPC-40-PVC and Type EPC-80-PVC.

2. Fittings: Comply with NEMA TC 3; match to conduit or tubing type and material. Couplings may be constructed integral to raceway.

C. LFNC: Comply with UL 1660. Fittings shall comply with UL 514B

D. ENT: Comply with NEMA TC 13 and UL 1653.

1. Sizes up to 1 inch maximum.

2. Transition adapters for interfacing with other systems.

E. Solvent cements and adhesive primers shall have a VOC content of 510 and 550 g/L or less, respectively, when calculated according to 40 CFR 59, Subpart D (EPA Method 24).

F. Solvent cements and adhesive primers shall comply with the testing and product requirements of the California Department of Health Services' "Standard Practice for the Testing of Volatile Organic Emissions from Various Sources Using Small-Scale Environmental Chambers."

2.04 METAL WIREWAYS AND AUXILIARY GUTTERS

A. Manufacturers: Subject to compliance with requirements, provide products by one of the following

1. Eaton-Cooper B-Line, Inc.

2. Hoffman; a Pentair company.

3. Husky

4. Schneider Electric.

5. Or approved equal.

B. Construction:

1. Sheet metal: sized and shaped as indicated,

2. Indoors: NEMA 250, Type 1, hinged cover.

3. Outdoors and unheated spaces: NEMA 250 Type 3R, Flanged and gasketed cover.

4. Stainless steel Type 4X in kitchens, sterilization rooms, laundry, washdown, and similar environments. Flanged and gasketed cover.

C. Fittings and Accessories: Include couplings, offsets, elbows, expansion joints, adapters, hold-down straps, end caps, and other fittings to match and mate with wireways as required for complete system.

D. Finish: Manufacturer's standard enamel finish.

2.05 SURFACE RACEWAYS

A. Surface Metal Raceways: Galvanized steel with snap-on covers complying with UL 5. Manufacturer's standard enamel finish and color.

B. Manufacturers: Subject to compliance with requirements, provide products by one of the following

1. Thomas & Betts Corporation.

2. Walker Systems, Inc.; Wiremold Company (The).

3. Wiremold Company (The); Electrical Sales Division.

4. Or approved equal.

2.06 BOXES, CABINETS, ENCLOSURES

A. Suitable and listed for the environment in which they are installed per UL 50 and NEMA 250.

1. Indoors: NEMA 250, Type 1.

2. Outdoors: NEMA 250 Type 3R, Flanged and gasketed cover.

3. Stainless steel Type 4X in kitchens, sterilization rooms, laundry, washdown, and similar environments. Flanged and gasketed cover.

B. Manufacturers: Subject to compliance with requirements, provide products by one of the following

1. Eaton.
2. EGS/Appleton Electric.
3. Erickson Electrical Equipment Company.
4. Pentair - Hoffman.
5. Hubbell Incorporated; Killark Electric Manufacturing Co. Division.
6. O-Z/Gedney; a unit of General Signal.
7. RACO; a Hubbell Company.
8. Robroy Industries, Inc.; Enclosure Division.
9. Scott Fetzer Co; Adalet Division.
10. Spring City Electrical Manufacturing Company.
11. Thomas & Betts Corporation.
12. Walker Systems, Inc.; Wiremold Company (The).
13. Woodhead, Daniel Company; Woodhead Industries, Inc. Subsidiary.
14. Or approved equal.

C. Sheet Steel Gage (Any Direction)

1. Less than 24”: 14 USS gauge.
2. Greater than 24”: 12 USS gauge.

D. Outlet and Device Boxes

1. Sheet Metal Outlet and Device Boxes: Comply with NEMA OS 1 and UL 514A.
2. Cast-Metal Outlet and Device Boxes: Comply with NEMA FB 1, galvanized ferrous alloy for use with IMC and RMC, aluminum for use with ARC, Type FD.
3. Nonmetallic Outlet and Device Boxes: Comply with NEMA OS 2 and UL 514C.

4. Luminaire Outlet Boxes: Nonadjustable, designed for attachment of luminaire weighing 50 lb. Outlet boxes designed for attachment of luminaires weighing more than 50 lb shall be listed and marked for the maximum allowable weight.

5. Wall Device Box Dimensions: Minimum depth 2-1/8 inches. Gangable boxes are permitted.

6. Floor Boxes

   a. Fully adjustable, Sheet Metal or Cast Metal

   b. Barrier to isolate power and communication outlets

   c. Coverplate: Flush with floor with free swinging hinged door to access outlets. Finish: Gray, Brown, or flanged with insert space to match floor finish

7. Box extensions used to accommodate new building finishes shall be of same material as recessed box.

E. Pull and Junction Boxes

1. Small Sheet: NEMA OS 1.

2. Cast-Metal: Comply with NEMA FB 1 and UL 1773, cast aluminum or galvanized cast iron with gasketed cover.

3. Access Cover as follows, unless otherwise indicated:

   a. Screw Cover:

      1) Both cover dimensions less than 30 inches

      2) In line pulls with one cover dimension less than 16 inches

   b. Either cover dimension greater than 30 inches: One or more hinged cover(s) with Latch.

F. Cabinets and Enclosures

1. Finished inside and out with manufacturer's standard enamel.

2. Access Door:

   a. Hinged with key latch to match panelboards.

b. Three point latch when dual doors are in use or when hinged side exceeds 47 inches.

c. Gasketed

3. Metal barriers to separate wiring of different systems and voltage.

4. Labeled with appropriate safety warnings

5. Accessory feet where required for freestanding equipment.

6. Interior Panels: Steel; all sides finished with manufacturer's standard enamel. Removeable. Hardware and accessories suitable for supporting equipment.

7. Provisions for seismic anchoring and deflection per Section 26 05 48 Seismic Controls for Electrical Systems.

8. Lugs for grounding conductor(s) bonded to enclosure.

9. Accessories:

a. Door Pocket for wiring diagram

b. Convenience Light and Receptacle

c. Environmental control system to support operating range of internal equipment. Filtered ventilation.

d. Terminal Blocks: Tin plated copper, 600Volt, individually removable, DIN rail mounted. For termination of all incoming and outgoing wiring.

e. Wire Channels: Nylon or PVC. Arranged alongside of equipment and sized per wiring requirements.

2.07 HANDHOLES AND BOXES FOR EXTERIOR UNDERGROUND WIRING

A. Manufacturers: Subject to compliance with requirements, provide products by one of the following:

1. Armorcast Products Company.

2. Carson Industries LLC.

3. CDR Systems Corporation; Hubbell Power Systems.

4. NewBasis.

5. Oldcastle Precast, Inc.;

6. Or approved equal.

B. Construction:

1. Load Rating:

a. Type A, Pedestrian with incidental vehicular traffic: ANSI/SCTE 77 Tier 8. Material shall be:

1) Polymer-Concrete Handholes and Boxes and Cover: Molded of sand and aggregate, bound together with polymer resin, and reinforced with steel, fiberglass, or a combination of the two.

2) Fiberglass-reinforced polyester resin.

b. Type B, Traffic Rated: AASHTO H-20. Precast Concrete with diamond plate cover.

2. Configuration: Designed for flush burial with closed bottom unless otherwise indicated.

3. Cover:

a. Secured by tamper-resistant locking devices.

b. Nonskid finish shall have a minimum coefficient of friction of 0.50.

c. Legend: Molded lettering, "ELECTRIC.", "COMMUNICATION" “FIRE ALARM or as otherwise appropriate to the system.

4. Conduit Entrance Provisions: Conduit-terminating fittings shall mate with entering ducts for secure, fixed installation in enclosure wall.

2.08 PENETRATIONS

A. Sleeves and seals associated with penetrations shall preserve the fire, thermal, water, or other rating of the penetrated element. Refer to Division 7 for Penetration Firestopping products.

B. Wall Sleeves

1. Steel Pipe Sleeves: ASTM A 53/A 53M, Type E, Grade B, Schedule 40, zinc coated, plain ends.

2. Cast-Iron Pipe Sleeves: Cast or fabricated "wall pipe," equivalent to ductile-iron pressure pipe, with plain ends and integral waterstop unless otherwise indicated.

3. Sleeves for Conduits Penetrating Non-Fire-Rated Gypsum Board Assemblies: Galvanized-steel sheet; 0.0239-inch minimum thickness; round tube closed with welded longitudinal joint, with tabs for screw-fastening the sleeve to the board.

C. Compressive Seals:

1. Modular sealing device, designed for field assembly, to fill annular space between sleeve and raceway.

2. Manufacturers: Subject to compliance with requirements, provide products by one of the following:

a. Eaton/Crouse Hinds Link Seal.

b. Emerson/OZ Gedney

c. Or approved equal.

3. Sleeve or body casting: Cast iron, cast in place or core drill.

4. Sealing Elements EPDM rubber interlocking links shaped to fit surface of pipe. Include type and number required for pipe material and size of pipe.

5. Pressure Plates: Glass Reinforced Nylon or PVC coated stainless steel

6. Connecting Bolts and Nuts: 316 type Stainless steel of length required to secure pressure plates to sealing elements.

7. Completed assembly suitable rated at 20 psig or 40 feet of head.

D. Raceway Seal Fittings

1. General

a. For use with GRC or IMC. Sealant fill, wire fill provisions and orientation to match application, location and containment requirement.

b. Sealing system, may be removed for replacement of wire without affecting integrity of raceway system.

c. Sealant or sealing material furnished by fitting manufacturer to match application and be compatible with wire insulation type and thermal rating.

2. Foam Sealant: High expansion, two part urethane foam, 120 lb compressive strength and capable of withholding 22 feet of water head pressure. Complies with UL 94 fire rating HBF. American Polywater FST or equal.

3. Sealing Bushings: Slotted PVC coated steel discs; neoprene sealing ring; stainless steel socket head cap screws and washers. Custom holes drilled to accommodate cables. Stainless steel socket head screws. Hot dipped galvanized malleable or ductile iron locking collars. Seals against gas or fluid pressure of 50 psig. O-Z Gedney CSB series.

4. In Line Epoxy Cement Fill Fittings: For control of gasses and vapors, rated for 40% fill, liquid epoxy sealant, Emerson EY or EYAX series or equal.

5. Comply with UL 1203 for explosion proof and dust ignition proof environments.

PART 3 - EXECUTION

3.01 GENERAL

A. Comply with NECA 1 and NECA 101 for installation requirements except where requirements on Drawings or in this article are stricter. Comply with NECA 102 for aluminum conduits.

B. Comply with NFPA 70.

C. Comply with requirements in Division 26 Sections "Hangers and Supports for Electrical Systems" and “Seismic Controls for Electrical Systems” for hangers and supports.

D. Determine optimal raceway routes that result in coordination with all building systems. Determine pull box quantities, sizes and locations.

3.02 RACEWAY APPLICATION

A. Outdoors: Apply raceway products as specified below unless otherwise indicated:

1. Exposed Conduit: GRC, IMC,.

2. Concealed Conduit, Aboveground: GRC, IMC, EMT.

3. Underground Conduit: RNC, Type EPC-80-PVC, Type EPC-40-PVC.

4. Boxes and Enclosures, Aboveground: NEMA 250, Type 4X, 4, or 3R

5. Handholes and Boxes, Underground: Provide boxes suitable for the load rating and the application.

B. Indoors

1. Exposed, Not Subject to Physical Damage: EMT, IMC, GRC.

2. Exposed and Subject to Damage: GRC, IMC.

a. Raceway locations include the following (any height):

1) Loading dock.

2) Gymnasiums

b. Raceway locations include the following, when below 8 feet above floor:

1) Corridors used for traffic of mechanized carts, forklifts, and pallet-handling units.

2) Mechanical rooms.

3. Concealed in Ceilings and Interior Walls and Partitions: EMT.

4. Damp or Wet Locations: GRC, IMC.

5. Boxes and Enclosures: NEMA 250, Type 1, except use NEMA 250, Type 4X stainless steel in institutional and commercial kitchens, trash compactor areas, at sump pumps, and similar damp, wet or corrosive locations.

C. In Slabs: Not permitted.

D. Connection to Vibrating Equipment (Including Transformers and Hydraulic, Pneumatic, Electric Solenoid, or Motor-Driven Equipment): FMC, except use LFMC in fire pump rooms, damp locations, and wet locations.

E. Raceway Fittings: Compatible with raceways and suitable for use and location.

1. Rigid and Intermediate Steel Conduit: Use threaded rigid steel conduit fittings unless otherwise indicated. Comply with NEMA FB 2.10.

2. PVC Externally Coated, Rigid Steel Conduits: Use only fittings listed for use with this type of conduit. Patch and seal all joints, nicks, and scrapes in PVC coating after installing conduits and fittings. Use sealant recommended by fitting manufacturer and apply in thickness and number of coats recommended by manufacturer.

3. EMT: Use compression or setscrew fittings. Comply with NEMA FB 2.10. Cast metal fittings are not acceptable.

4. Flexible Conduit: Use only fittings listed for use with flexible conduit. Comply with NEMA FB 2.20.

F. Install nonferrous conduit or tubing for circuits operating above 60 Hz. Where aluminum raceways are installed for such circuits and pass through concrete, install in nonmetallic sleeve.

3.03 INSTALLATION

A. Install raceways parallel or perpendicular to structural building lines. Conceal conduit and EMT within finished walls, ceilings, and floors except as follows:

1. In rooms without a dropped ceiling.

2. In non-public spaces such as mechanical, electrical, communication rooms.

3. Parking garages.

4. Unless otherwise indicated.

B. Do not route:

1. Parallel horizontal runs of raceways within 6 inches or directly above flues, steam, or hot-water piping.

2. Nonmetallic conduit where ambient temperature exceeds 120 deg F.

C. Complete raceway installation before starting conductor installation.

D. Anchors and Supports:

1. Positively attach raceways, boxes, and enclosures to structure, do not attach to supports for mechanical or other non-electrical systems.

2. Support raceways within 12 inches of enclosures to which attached.

3. Set boxes, enclosures, and cabinets plumb.

E. Raceway Terminations:

1. Cut conduit perpendicular to the length. For conduits 2-inch trade size and larger, use roll cutter or a guide to make cut straight and perpendicular to the length.

2. Locations Subject to Moisture or Vibration: Use insulating bushings to protect conductors.

3. Terminate threaded conduits into threaded hubs or with locknuts on inside and outside of boxes or cabinets. Install bushings on conduits up to 1-1/4-inch trade size and insulated throat metal bushings on 1-1/2-inch trade size and larger conduits terminated with locknuts. Install insulated throat metal grounding bushings on service conduits.

4. Install raceways square to the enclosure and terminate at enclosures with locknuts. Install locknuts hand tight plus 1/4 turn more.

5. Do not rely on locknuts to penetrate nonconductive coatings on enclosures. Remove coatings in the locknut area prior to assembling conduit to enclosure to assure a continuous ground path.

6. Threaded Conduit Joints, Exposed to Wet, Damp, Corrosive, or Outdoor Conditions: Apply listed compound to threads of raceway and fittings before making up joints. Follow compound manufacturer's written instructions.

F. Install pull wires in empty raceways. Use polypropylene or monofilament plastic line with not less than 200-lb tensile strength. Leave at least 12 inches of slack at each end of pull wire. Cap, plug or compressive seal underground raceways designated as spare at point of below grade entry into building or at first pulling access point.

G. Raceways Embedded in Slabs:

1. Only use in floors and slabs that are not-fire rated, or where manufacturer obtains approval of authority having jurisdiction by submitting appropriate documentation.

2. Run conduits, parallel or at right angles to main reinforcement. Where at right angles to reinforcement, place conduit close to slab support. Secure raceways to reinforcement at maximum10-foot intervals. Crossovers of raceways shall not exceed minimum cover requirements.

3. Arrange raceways to keep a minimum of 1.5 inches of concrete cover in all directions. Tie to rebar at intervals which will preserve minimum cover and prevent flotation.

4. Do not embed threadless fittings in concrete.

5. Change from nonmetallic to metallic raceway before rising above floor.

H. Stub-ups:

1. Above Recessed Ceilings: Use a raceway bushing or insulated fitting to terminate stub-ups not terminated in hubs or in an enclosure.

2. Through slab, comply with either:

   a. Arrange stub-ups so curved portions of bends are not visible above finished slab.

   b. Terminate conduit at threaded GRC coupling with top of coupling 1/8” below top of slab.

I. Outlet and Device Boxes:

1. Mount outlet boxes at heights indicated on Drawings. If mounting heights of boxes are not individually indicated, give priority to ADA requirements. Install wall outlet boxes with height measured to center of box unless otherwise indicated.

2. Recessed Boxes in Masonry Walls: Saw-cut opening for box in center of cell of masonry block, and install box flush with surface of wall. Prepare block surfaces to provide a flat surface for a rain-tight connection between box and cover plate or supported equipment and box.

3. Horizontally separate boxes mounted on opposite sides of walls, so they are not in the same vertical channel. Do not compromise wall ratings for fire and sound separation.

4. Locate boxes so that cover or plate will not span different building finishes.

5. Support boxes of three gangs or more from more than one side by spanning two framing members or mounting on brackets specifically designed for the purpose.

6. Box construction and size to match device requirements. Where device is furnished under this or other Divisions of this specification obtain requirements prior to roughing in.

7. Set floor boxes level and adjust to match finished floor surface.

8. Provide cast outlet boxes in exterior, wet, or cast in concrete locations.

J. Surface Raceways:

1. Install surface raceways only where indicated.

2. Install surface raceway with a minimum 2-inch radius control at bend points.

3. Secure surface raceway with screws or other anchor-type devices at intervals not exceeding 48 inches and with no less than two supports per straight raceway section. Support surface raceway according to manufacturer's written instructions. Tape and glue are not acceptable support methods.

K. Movement:

1. General

   a. Select raceway elements to accommodate the expected movement. Set initial position of raceway movement element as appropriate to accommodate ultimate worst case movement.

   b. Install raceway supports to allow for expansion movement.

   c. Provide bonding jumper for fittings without a continuous ground path.

2. Raceway thermal performance:

   a. Install in each run of aboveground metallic raceway that is located where environmental temperature change may exceed 100 deg F and that has straight-run length that exceeds 100 feet.

   b. Install fitting(s) that provide expansion and contraction for at least 0.000078 inch per foot of length of straight run per deg F of temperature change for metal conduits.

3. Structural and Architectural Elements: Install expansion fittings or flexible raceways at all locations where raceways cross building or structure expansion joints. Install each expansion-joint fitting with position, mounting, and piston setting selected according to manufacturer's written instructions for conditions at specific location at time of installation.

4. Where piston fittings are used provide slack conductor in adjacent pull boxes or equipment to alleviate stress on conductor terminations during expansion joint movement.

L. Flexible Conduit Connections: Comply with NEMA RV 3. Use a maximum of 72 inches of flexible conduit for recessed and semi-recessed luminaires, equipment subject to vibration, noise transmission, transformers and motors.

3.04 UNDERGROUND RACEWAY SYSTEMS

A. For trenching and backfill. Excavate trench bottom to provide firm and uniform support.

B. Direct-Buried Conduit:

1. Trade size minimum: 1 inch, except ¾ inch may be used for runs shorter than 30 feet.

2. Comply with manufacturer's written instructions for solvent welding RNC and fittings.

3. After installing conduit, backfill and compact soil. Start at tie-in point, and work toward end of conduit run, leaving conduit at end of run free to move with expansion and contraction as temperature changes during this process. Firmly hand tamp backfill around conduit to provide maximum supporting strength. After placing controlled backfill to within 12 inches of finished grade, make final conduit connection at end of run and complete backfilling with normal compaction.

4. Install manufactured rigid steel conduit elbows for stub-ups at poles and equipment and at building entrances through floor. Cover exterior of conduit from 3 inches above grade to 12 inches below grade with a bitumastic tape or coating.

   a. Couple steel conduits to ducts with adapters designed for this purpose, and encase coupling with 3 inches of concrete for a minimum of 12 inches on each side of the coupling.

   b. For stub-ups at equipment mounted on outdoor concrete bases and where conduits penetrate building foundations, extend steel conduit horizontally a minimum of 60 inches from edge of foundation or equipment base. Install insulated grounding bushings on terminations at equipment.

5. Underground Warning Tape: Comply with requirements in Division 26 Section "Identification for Electrical Systems."

6. Raceways routed under slab on grade shall be kept a minimum of six inches below the underside of the slab.

C. Handholes and Boxes

1. Install handholes and boxes level and plumb and with orientation and depth coordinated with connecting conduits to minimize bends and deflections required for proper entrances.

2. Unless otherwise indicated, support units on a level bed of crushed stone or gravel, graded from 1/2-inch sieve to No. 4 sieve and compacted to same density as adjacent undisturbed earth.

3. Elevation: In paved areas, set so cover surface will be flush with finished grade. Set covers of other enclosures 1 inch above finished grade. Provide offset risers to match slope of cover to slope of finished grade.

4. Install handholes with bottom below frost line.

5. Field-cut openings for conduits according to enclosure manufacturer's written instructions. Cut wall of enclosure with a tool designed for material to be cut. Size holes for terminating fittings to be used, and seal around penetrations after fittings are installed.

3.05 SEALS

A. Select seals as appropriate for the element (ie: liquids, gasses, dust, and/or vapor) the seal is isolating.

B. Follow manufacturer’s instructions when installing sealants and seal fittings.

C. Location:

1. Seal fitting shall be accessible.

2. Locate seal fittings so no fittings or boxes are between the seal and the element requiring isolation.

3. For concealed raceways, install each fitting in a flush steel box with a blank cover plate having a finish like that of adjacent plates or surfaces.

D. Transition to RMC or IMC where required by code or seal fitting application.

E. Seal the following points:

1. Where raceways pass from warm to cold locations:

a. Boundaries of refrigerated spaces

b. Boundaries between heated and unheated spaces.

2. Raceway connections to continually wet environments such as sumps and wells.

3. To limit transmittance of hazardous liquids, gasses, dust, and/or vapors.

4. Where raceways 2” and larger rise from below grade to terminate at stand or slab mounted exterior utilization equipment.

3.06 PENETRATIONS

A. Penetrate fire barriers, smoke barriers, vapor barriers, acoustic barriers, waterproofing, roofing materials, floors, walls, foundations, and other rated architectural and structural elements and assemblies in a manner that preserves the integrity of the rating and the intended performance.

1. Install firestopping at penetrations of fire-rated floor and wall assemblies. Comply with requirements in Division 07 requirements for penetration firestopping.

2. Roof penetrations shall be made in accordance with the recommendations of the roofing system supplier and shall not compromise the roofing warranty.

B. Penetration of below grade walls and slab on grade:

1. Comply with either of the following:

a. Cast raceways into wall or slab.

b. Provide sleeve and compression seal between sleeve and raceway. The compression seal manufacturer shall have documentation indicating that the sleeve is compatible with the seal.

2. Seal interior of raceways:

a. Seal Bushings: Utilize at all penetrations where other seals are not specified. Provide a pull box for sealing bushing(s) at point of entry when end use equipment is located away from wall or elevated above slab.

b. Foam Sealant:

1) For phase conductor sizes #2 AWG and smaller.

2) For feeder (not service) phase conductor sizes larger than #2AWG, where no portion of the raceway entering the building or equipment travels below grade at a height that is above the point of entry or the point of raceway termination at the equipment.

3) Apply foam sealant at raceway entry point into first interior and exterior pull point.

4) Apply foam sealant at all raceways entering handholes and manholes.

c. Below slab raceways are not required to be sealed when the following conditions are met:

1) The raceway travels below slab from one interior building point to another, and the slab entrance and exit points are at same height.

2) The raceway horizontal travel distance is less than 20 feet or the raceway is less than 2” in diameter and the horizontal travel distance is less than 100 feet.

3.07 PROTECTION

A. Protect coatings, finishes, and cabinets from damage and deterioration.

1. Repair damage to galvanized finishes with zinc-rich paint recommended by manufacturer.

2. Repair damage to PVC coatings or paint finishes with matching touchup coating recommended by manufacturer.

END OF SECTION

SECTION 26 05 48.16

SEISMIC CONTROLS FOR ELECTRICAL SYSTEMS

PART 1 - GENERAL

1.01 RELATED DOCUMENTS

A. Drawings and general provisions of the Contract, including General and Supplementary Conditions and Division 01 Specification Sections, apply to this Section.

1.02 RELATED SECTIONS

A. Section 26 05 29 "Hangers and Supports for Electrical Systems" for commonly used electrical supports and installation requirements.

B. Refer to Product specification paragraphs of individual Division 26 Sections

1.03 SUBMITTALS

A. Product Data: For each type of product.

1. Illustrate and indicate style, material, strength, fastening provision, and finish for each type and size of seismic-restraint component used.

   a. Tabulate types and sizes of seismic restraints, complete with report numbers and rated strength in tension and shear as evaluated by any of the following:

      1) an evaluation service member of ICC-ES

      2) an agency acceptable to authorities having jurisdiction.

   b. Annotate to indicate application of each product submitted and compliance with requirements.

2. Coordinate submittal information with Section 26 05 29 "Hangers and Supports for Electrical Systems" and organize the submittals of that section and this section making it clear which products will be associated with systems requiring seismic restraint.

B. Design Submittal: For support and anchoring of electrical products.

1. Engineer of Record: Professional Structural Engineer with appropriate seismic certification shall provide design calculations and details for seismic restraints complying with performance requirements and design criteria described herein and as established by the authority having jurisdiction. Submit detailed designs of equipment support, anchoring and mounting with associated design calculations signed and sealed by the qualified professional engineer responsible for their preparation.

    a. Submittal review by the Engineer of Record for Division 26 will not include a review of structural engineering.

    b. Submit documentation as requested by the authority having jurisdiction to the authority having jurisdiction, obtain approval and comply with all review comments.

2. Comply with ASCE/SEI 7 requirements for non-structural components and submit the following items. Format shall be suitable for acceptance by the authority having jurisdiction.

    a. Component seismic qualifications and special certifications. Refer to specification sections for additional requirements.

    b. Design calculations accounting for seismic demand on non-structural components.

    c. Details of component anchoring for each of the products in the Division 26 specification sections, unless exempted by ASCE 7. Details shall demonstrate attachment compatibility with building structure and equipment.

    d. Details of component supports and seismic restraints for each of the products in the Division 26 specification sections, unless exempted by ASCE 7. Details shall demonstrate attachment compatibility with building structure and equipment.

    e. Details allowing for seismic movement:

        1) Flexible raceway, cabling, and busway connections to the top of switchgear, switchboards, and other floor mounted equipment which is anchored at its base as a free cantilever and/or supports restraining free cantilever movement.

        2) Raceways, cabling, and busway transitioning across multiple floors or across expansion joints. Determine floor to floor movement from building structural engineer.

3) Service entrances to building where soil movement is expected between the building and soil supported systems.

4) Where raceways connect to components mounted on seismic isolation systems.

3. Seismic Restraint Details:

a. As appropriate to the product item, seismic restraints include anchors, supports, bracing, isolation or other means to force the product to withstand the seismic performance criteria and to not adversely affect itself or other systems with the limits of movement established by the design.

b. Design Analysis: To support selection and arrangement of seismic restraints. Include calculations of combined tensile and shear loads.

c. Details: Indicate fabrication and arrangement. Detail attachments of restraints to the restrained items and to the structure. Show attachment locations, methods, and spacings. Identify components, list their strengths, and indicate directions and values of forces transmitted to the structure during seismic events. Indicate association with vibration isolation devices. Cross reference seismic restraint and supporting elements to tabulated product data.

C. Coordination Drawings: Show coordination of seismic restraint for electrical components with other systems and equipment in the vicinity, including other supports and seismic restraints. Electrical components include:

1. Non-seismically restrained systems that may affect seismically restrained systems.

2. Raceways

3. Busway

4. Control and monitoring panels

5. Generators.

6. Panelboards.

7. Switchboards.

8. Switchgear.

9. Transformers.

PART 2 - PRODUCTS

2.01 PERFORMANCE REQUIREMENTS

A. Electrical products in Divisions 26 and as reference by other Divisions to this Section; their associated product supports, attachments, anchors, braces, seismic restraints; and integrated assemblies thereof; shall be designed and constructed per the performance requirements specified herein.

B. Seismic Criteria:

1. Refer to the International Building Code (IBC) as adopted and amended by the local authority having jurisdiction the project site to determine seismic force criteria. Refer to ASCE 7 for seismic design requirements for nonstructural components.

2. Refer to the Structural Drawings for the earthquake design data required by IBC 1603.1.5 applicable to the project site and building.

3. Determine seismic criteria applicable to equipment at specific locations within the building, for example: ground floor versus roof top seismic acceleration.

C. Electrical products shall have an ASCE/SEI 7 Component Importance Factor, Ip, assigned as follows:

1. As specified in individual sections of the product specifications for special certifications per ASCE/SEI 7 paragraph 13.2.2.

2. An Ip of 1.5 is assigned to Emergency and Life Safety System products and connecting wire and raceway. Refer to drawings for emergency and life safety system components which include, but not limited to:

a. Fire Pump, Transfer Switch, Controller, and associated systems

b. Generators and generator supporting systems.

c. Transfer Switches, switchgear, switchboards, panelboards, transformers, and other active electrical equipment supporting loads per Articles 700 and 701 of the NEC.

d. Egress and Exit Lighting

e. Fire Alarm System Control and Notification Panels

3. As a matter of economic investment. and not life safety, an Ip of 1.5 is assigned to the following products:

   a. Switchgear and switchboards

   b. Transformers rated above 40kVA

   c. Uninterruptible power supplies rated above 10kVA

4. Unless building code requirements determine otherwise, the Component Importance Factor of electrical systems not defined above is 1.0.

D. Building Interface: Review building architectural, structural, and mechanical systems and design and construct non-compromising means of attachment and anchoring.

E. Seismic restraint products shall be approved for the application by an evaluation service member of ICC-ES. Seismic-restraint devices shall have horizontal and vertical load testing and analysis.

2.02 SPECIAL CERTIFICATIONS

A. Provide special certifications per ASCE/SEI 7 paragraph 13.2.2 for electrical products(components) with an Ip greater than 1.0 when located in Seismic Design Categories C through F. Testing shall be in accordance with the following:

1. ICC ES 156 Seismic Certification By Shake Table Testing of Non-Structural Components.

2. A current listing on the State of California's OSHPD Special Seismic Certification Preapproval list with an S_{DS} value adequate for the project site may be used to demonstrate compliance with these criteria.

B. Product certifications may be made by certifying products to levels that exceed the Performance Requirements.

2.03 RESTRAINT CHANNEL BRACINGS

A. Description: MFMA-4, shop- or field-fabricated bracing assembly made of slotted steel channels with accessories for attachment to braced component at one end and to building structure at the other end, with other matching components, and with corrosion-resistant coating; rated in tension, compression, and torsion forces.

2.04 RESTRAINT CABLES

A. Restraint Cables: ASTM A 603 galvanized-steel cables. End connections made of steel assemblies with thimbles, brackets, swivel, and bolts designed for restraining cable service; with a minimum of two clamping bolts for cable engagement.

2.05 SEISMIC-RESTRAINT ACCESSORIES

A. Hanger-Rod Stiffener: Steel tube, angle, or steel slotted-support-system sleeve clamped or bolted to hanger rod.

B. Hinged and Swivel Brace Attachments: Multifunctional steel connectors for attaching hangers to rigid channel bracings or restraint cables.

C. Bushings for Floor-Mounted Equipment Anchor Bolts: Neoprene bushings designed for rigid equipment mountings and matched to type and size of anchor bolts and studs.

D. Bushing Assemblies for Wall-Mounted Equipment Anchorage: Assemblies of neoprene elements and steel sleeves designed for rigid equipment mountings and matched to type and size of attachment devices used.

E. Resilient Isolation Washers and Bushings: One-piece, molded, oil- and water-resistant neoprene, with a flat washer face.

2.06 MECHANICAL ANCHOR BOLTS

A. Mechanical Anchor Bolts: Drilled-in and stud-wedge or female-wedge type in zinc-coated steel for interior applications and stainless steel for exterior applications. Select anchor bolts with strength required for anchor and as tested according to ASTM E 488.

2.07 ADHESIVE ANCHOR BOLTS

A. Adhesive Anchor Bolts: Drilled-in and capsule anchor system containing PVC or urethane methacrylate-based resin and accelerator, or injected polymer or hybrid mortar adhesive. Provide anchor bolts and hardware with zinc-coated steel for interior applications and stainless steel for exterior applications. Select anchor bolts with strength required for anchor and as tested according to ASTM E 488.

PART 3 - EXECUTION

3.01 EXAMINATION

A. Examine areas and equipment to receive seismic-control devices for compliance with requirements for installation tolerances and other conditions affecting performance of the Work.

B. Examine roughing-in for reinforcement and cast-in-place anchors to verify actual locations before installation.

C. Proceed with installation only after unsatisfactory conditions have been corrected.

3.02 APPLICATIONS

A. Anchor, support, and restrain electrical products in accordance with the design details required by this specification section.

B. Strength of Support and Seismic-Restraint Assemblies: Select sizes of components so strength will be adequate to carry present and future static and seismic loads within specified loading limits.

3.03 SEISMIC-RESTRAINT DEVICE INSTALLATION

A. Coordinate the location of embedded connection hardware with supported equipment attachment and mounting points and with requirements for concrete reinforcement and formwork specified in specification Division 3.

B. Equipment and Hanger Restraints:

1. Install resilient, bolt-isolation washers on equipment anchor bolts where clearance between anchor and adjacent surface exceeds 0.125 inch.

2. Install seismic-restraint devices using methods determined by the design submittal of this specification section.

C. Install cables so they do not bend across edges of adjacent equipment or building structure.

D. Install bushing assemblies for mounting bolts for wall-mounted equipment, arranged to provide resilient media where equipment or equipment-mounting channels are attached to wall.

E. Attachment to Structure: Anchor bracing to structure at flanges of beams, at upper truss chords of bar joists, or at concrete members.

F. Drilled-in Anchors:

1. Identify position of reinforcing steel and other embedded items prior to drilling holes for anchors. Do not damage existing reinforcing or embedded items during coring or drilling. Notify the structural engineer if reinforcing steel or other embedded items are encountered during drilling. Locate and avoid prestressed tendons, electrical and telecommunications conduit, and gas lines.

2. Do not drill holes in concrete or masonry until concrete, mortar, or grout has achieved full design strength.

3. Wedge Anchors: Protect threads from damage during anchor installation. Heavy-duty sleeve anchors shall be installed with sleeve fully engaged in the structural element to which anchor is to be fastened.

4. Adhesive Anchors: Clean holes to remove loose material and drilling dust prior to installation of adhesive. Place adhesive in holes proceeding from the bottom of the hole and progressing toward the surface in such a manner as to avoid introduction of air pockets in the adhesive.

5. Set anchors to manufacturer's recommended torque using a torque wrench.

6. Install zinc-coated steel anchors for interior and stainless-steel anchors for exterior applications.

3.04 ACCOMMODATION OF DIFFERENTIAL SEISMIC MOTION

A. Install flexible connections in runs of raceways, cables, wireways, cable trays, and busways where they cross seismic joints, where adjacent sections or branches are supported by different structural elements, and where connection is terminated to equipment that is anchored to a different structural element from the one supporting them as they approach equipment.

1. Flexible connection shall allow for worst case movement between the independently supported elements.

2. Initial positions of the flexible or sliding element shall be based on initial position of structure relevant to movement in any direction.

B. Sliding or compression/expansion raceway elements shall have adjacent pull boxes to allow for ingress or pay out of cable/wire associated with movement of the element.

END OF SECTION 26 05 48.16

SECTION 26 05 53

IDENTIFICATION FOR ELECTRICAL SYSTEMS

PART 1 - GENERAL

1.01 RELATED DOCUMENTS

A. Drawings and general provisions of the Contract, including General and Supplementary Conditions and Division 01 Specification Sections, apply to this Section.

1.02 SUMMARY

A. Section Includes:

1. Equipment identification nameplates.
2. Identification for conductors, cables AC and MC cables
3. Identification for raceways.
4. Underground-line warning tape.
5. Warning labels and signs.
6. Instruction signs.
7. Receptacle Identification Labels
8. Miscellaneous identification products.

1.03 REFERENCES

A. American National Standards Institute (ANSI):

1. ANSI A13.1 "Scheme for Identification of Piping Systems"

B. Occupational Safety and Health Administration (OSHA). 29 CFR - Labor Chapter XVII Part 1910-145 "Occupational and Safety Health Standards" 1992.

C. Washington Administrative Code (WAC) 296-24 Part B-2 "Safety Color Code for Marking Physical Hazards."

1.04 ACTION SUBMITTALS

A. Product Data: For each electrical identification product indicated.

B. Samples: For each type of label and sign to illustrate size, colors, lettering style, mounting provisions, and graphic features of identification products.

C. Identification Schedule: An index of nomenclature of electrical equipment and system components used in identification signs and labels.

1.05 QUALITY ASSURANCE

A. Comply with ANSI A13.1and IEEE C2.

B. Comply with NFPA 70.

C. Comply with 29 CFR 1910.144 and 29 CFR 1910.145.

D. Comply with ANSI Z535.4 for safety signs and labels.

E. Adhesive-attached labeling materials, including label stocks, laminating adhesives, and inks used by label printers, shall comply with UL 969.

1.06 COORDINATION

A. Coordinate identification names, abbreviations, colors, and other features with requirements in other Sections requiring identification applications, Drawings, Shop Drawings, manufacturer's wiring diagrams, and the Operation and Maintenance Manual; and with those required by codes, standards, and 29 CFR 1910.145. Use consistent designations throughout Project.

B. Note that equipment names and room numbers shown on the Contract Drawings may not be final names and numbers. Confirm all final naming prior to label manufacture.

C. Coordinate installation of identifying devices with completion of covering and painting of surfaces where devices are to be applied.

D. Coordinate installation of identifying devices with location of access panels and doors.

E. Install identifying devices before installing acoustical ceilings and similar concealment.

PART 2 - PRODUCTS

2.01 EQUIPMENT NAMEPLATES

A. Materials:

1. Engraved plastic laminate - three-layer laminated plastic with punched or drilled holes for screw mounting.

2. Self-Adhesive, Engraved, Laminated Acrylic or Melamine Label: Adhesive backed.

3. Adhesive Film Label: Machine printed, in black, by thermal transfer or equivalent process.

4. Adhesive Film Label with Clear Protective Overlay: Machine printed, in black, by thermal transfer or equivalent process. Overlay shall provide a weatherproof and UV-resistant seal for label.

5. Stenciled Legend: In nonfading, waterproof, black ink or paint. Minimum letter height shall be 1 inch

B. Dimension

1. Nameplate minimum of 1 3/4" high by 5" wide.

2. Lettering height for panel or equipment identifier @ 1/4".

3. Lettering height for remaining lines @ 1/8" high with 1/8" spacing between lines.

4. Normal System: White letters on black background.

5. Emergency System: White letters on orange background.

C. Switchboard and Switchgear Nameplates:

1. Provide engraved plastic nameplate for each new Switchboard or Switchgear with the following information:

Line 1: Switchboard or Switchgear Name

Line 2: Source from which fed (i.e., "Fed From:")

Line 3: Amps, voltage, phase, and wire

Line 4: Branch from which served (Normal, Emergency, Legally Required Standby, Optional Standby).

2. Provide engraved plastic nameplates for each new branch device in each switchboard or switchgear with the following information:

   Line 1: Load Served (i.e., panel names, motor control center, etc.)

   Line 2: Area of building served (i.e., penthouse, lab, etc.)

   Line 3: Type of load served (i.e., lighting, receptacles, equipment, etc.)

   Line 4: Amp and AIC rating, if Amp rating and AIC are not visible on branch device with dead-front cover in closed position.

D. Panelboard Nameplates

1. Provide engraved plastic nameplate for each new panelboard with the following information:

   Line 1: Panelboard Name

   Line 2: Source from which panel is fed (e.g., Fed From SWBD 4N2A)

   Line 3: Transfer switch from which panel is fed (if applicable)

   Line 4: Amps, voltage, phase, and wire

E. Motor Control Center Nameplates

1. Provide engraved plastic nameplate for each new motor control center with the following information:

   Line 1: Motor Control Center Name

   Line 2: Source from which fed (e.g., Fed From SWBD 4N2A)

   Line 3: Transfer switch from which MCC is fed (if applicable)

   Line 4: Amps, voltage, phase, and wire

2. Provide phenolic nameplate for each new motor control center cubicle with the following information:

   Line 1: Load served, motor size in HP.

Line 2: Area that load serves.

Line 3: Starter size and Over-current Protection size and Type. (e.g., NEMA 1 - 30 Amp CB)

F. Disconnects, Starters, Combination Starters and Other Devices

1. Provide phenolic nameplate for each device with the following information:

Line 1: Load served.

Line 2: Panelboard and circuit number from which device is fed.

Line 3: Fuse size or breaker size as applicable

G. Main Service Project Nameplate

1. At Main Service Distribution Switchboard, provide engraved nameplate on switchboard/ switchgear front with the following information:

Line 1: Project Name: (3/8" lettering, all other 1/4")

Line 2: Architect

Line 3: Electrical Consultant (Stantec Consulting Services, Inc.)

Line 4: Electrical Contractor

Line 5: Year of Manufacturer

2. At Main Service Distribution Switchboard, provide engraved nameplate on switchboard/switchgear front listing all other services, feeders, and branch circuits supplying the building or structure and the area served by each, per NEC 230 -2(e) Identification.

3. Comply with ANSI A13.1.

2.02 CONDUCTOR, CABLE AND AC AND MC CABLE IDENTIFICATION MATERIALS

A. Comply with ANSI A13.1 for minimum size of letters for legend and for minimum length of color field for each conductor and cable size.

B. Color-Coding Conductor Tape: Colored, self-adhesive vinyl tape not less than 3 mils thick by 1 to 2 inches wide.

C. Self-Adhesive Vinyl Labels: Preprinted, flexible label laminated with a clear, weather- and chemical-resistant coating and matching wraparound adhesive tape for securing ends of legend label.

D. Snap-Around Labels: Slit, pre-tensioned, flexible, preprinted, color-coded acrylic sleeve, with diameter sized to suit diameter of conductor or cable it identifies and to stay in place by gripping action.

E. Metal Tags: Brass or aluminum, 2 by 2 by 0.05 inch, with stamped legend, punched for use with self-locking cable tie fastener.

2.03 RACEWAY IDENTIFICATION MATERIALS

A. Comply with ANSI A13.1, for minimum lettering size and for minimum length of color field for each raceway size.

B. Color for Raceway Carrying Circuits at 600 V or Less:

1. Black letters on an orange field.

2. Legend**:** Indicate Voltage, Indicate load name

C. Color for Raceway Carrying Circuits More than 600 V:

1. Black letters on an orange field.

2. Legend: "DANGER CONCEALED HIGH VOLTAGE WIRING" with 3-inch- high letters on 20-inch centers.

D. Color for Raceway Carrying Fire Alarm Circuits:

1. White Letters on a red field

2. Legend: "FIRE ALARM" with 3-inch- high letters on 20-inch centers.

E. Self-Adhesive Vinyl Labels for Raceways Carrying Circuits at 600 V or Less: Preprinted, flexible label laminated with a clear, weather- and chemical-resistant coating and matching wraparound adhesive tape for securing ends of legend label.

F. Snap-Around Labels for Raceways Carrying Circuits at 600 V or Less: Slit, pretensioned, flexible, preprinted, color-coded acrylic sleeve, with diameter sized to suit diameter of raceway or cable it identifies and to stay in place by gripping action.

G. Snap-Around, Color-Coding Bands for Raceways Carrying Circuits at 600 V or Less: Slit, pretensioned, flexible, solid-colored acrylic sleeve, 2 inches long, with diameter sized to suit diameter of raceway or cable it identifies and to stay in place by gripping action.

H. Tape and Stencil for Raceways Carrying Circuits More Than 600 V: 4-inch- wide black stripes on 10-inch centers diagonally over orange background that extends full length of raceway or duct and is 12 inches wide. Stop stripes at legends.

I. Metal Tags: Brass or aluminum, 2 by 2 by 0.05 inch, with stamped legend, punched for use with self-locking cable tie fastener.

2.04 FLOOR MARKING TAPE

A. 2-inch- wide, 5-mil pressure-sensitive vinyl tape, with black and white stripes and clear vinyl overlay.

2.05 UNDERGROUND-LINE WARNING TAPE

A. Tape:

1. Recommended by manufacturer for the method of installation and suitable to identify and locate underground electrical utility lines.

2. Printing on tape shall be permanent and shall not be damaged by burial operations.

3. Tape material and ink shall be chemically inert, and not subject to degrading when exposed to acids, alkalis, and other destructive substances commonly found in soils.

B. Color and Printing:

1. Comply with ANSI Z535.1 through ANSI Z535.5.

C. Non-Conducting Protective Tapes

1. Pigmented polyolefin, bright-colored, continuous-printed with the inscription noted above compounded for direct-burial service.

2. Thickness: 4 mils.

D. Protective Tapes Suitable for Conductive or Inductive Tracing.

1. Detectable three-layer laminate, consisting of a printed pigmented polyolefin film, a solid aluminum-foil core, and a clear protective film that allows inspection of the continuity of the conductive core, bright-colored, continuous-printed with the inscription indicated above, compounded for direct-burial service.

2. Overall Thickness: 5 mils.

3. Foil Core Thickness: 0.35 mil.

2.06 POSTED DRAWINGS

A. Electrical One-line or Risers: Print electrical one-line/riser diagrams on 20 lb. bond paper. (Blueprint paper is not acceptable). Reduce drawings to approximately 1/2 size using Xerox reduction process. Contact engineer to obtain updated original plans for printing.

B. Mounting Frames: Extruded aluminum, 4 point screw mount with 1/8" clear plexi-glass cover.

2.07 WARNING LABELS AND SIGNS

A. Comply with NFPA 70 and 29 CFR 1910.145.

B. Self-Adhesive Warning Labels: Factory-printed, multicolor, pressure-sensitive adhesive labels, configured for display on front cover, door, or other access to equipment unless otherwise indicated.

C. Baked-Enamel Warning Signs:

1. Preprinted aluminum signs punched or drilled for fasteners, with colors, legend, and size required for application.

2. 1/4-inch grommets in corners for mounting.

3. Nominal size, 7 by 10 inches.

D. Metal-Backed, Butyrate Warning Signs:

1. Weather-resistant, nonfading, preprinted, cellulose-acetate butyrate signs with 0.0396-inch galvanized-steel backing; and with colors, legend, and size required for application.

2. 1/4-inch grommets in corners for mounting.

3. Nominal size, 10 by 14 inches.

E. Warning label and sign shall include, but are not limited to, the following legends:

1. Multiple Power Source Warning: "DANGER - ELECTRICAL SHOCK HAZARD - EQUIPMENT HAS MULTIPLE POWER SOURCES."

2. Workspace Clearance Warning: "WARNING - OSHA REGULATION - AREA IN FRONT OF ELECTRICAL EQUIPMENT MUST BE KEPT CLEAR FOR 36 INCHES."

2.08 INSTRUCTION SIGNS

A. Engraved, laminated acrylic or melamine plastic, minimum 1/16 inch thick for signs up to 20 sq. inches and 1/8 inch thick for larger sizes.

1. Engraved legend with black letters on white face.

2. Punched or drilled for mechanical fasteners.

3. Framed with mitered acrylic molding and arranged for attachment at applicable equipment.

B. Adhesive Film Label: Machine printed, in black, by thermal transfer or equivalent process. Minimum letter height shall be 3/8 inch.

C. Adhesive Film Label with Clear Protective Overlay: Machine printed, in black, by thermal transfer or equivalent process. Minimum letter height shall be 3/8 inch. Overlay shall provide a weatherproof and UV-resistant seal for label.

2.09 RECEPTACLE AND SWITCH IDENTIFICATION LABELS

A. Materials (Where engraved device faceplates are not used)

1. Engraved plastic laminate - three-layer laminated plastic with punched or drilled holes for screw mounting.

2. Self-Adhesive, Engraved, Laminated Acrylic or Melamine Label: Adhesive backed.

3. Adhesive Film Label: Machine printed, in black, by thermal transfer or equivalent process.

4. Adhesive Film Label with Clear Protective Overlay: Machine printed, in black, by thermal transfer or equivalent process. Overlay shall provide a weatherproof and UV-resistant seal for label.

B. Identification

1. Label emergency receptacle and switch device plates with "EMERGENCY" above the receptacle with the panelboard and circuit number supplying them below the receptacle. Label lettering shall be approximately 3/16" high, red filled characters.

2. Label normal receptacle cover plates in Critical Care Areas as defined in the NEC, with the circuit number supplying them below the receptacle with 3/16" high, black filled letters.

3. Label normal receptacle and switch cover plates with the circuit number supplying them below the device using 3/16" high, black filled letters.

4. For all receptacles other than 15 and 20 amp, 120 volts, provide separate nameplate with ampere rating, voltage, and phase.

5. Provide labels on faceplates of all owner furnished equipment and equipment furnished under other divisions with circuit number, and "EMERGENCY" (where applies) as specified in this section.

2.10 CABLE TIES

A. General-Purpose Cable Ties: Fungus inert, self-extinguishing, one piece, self-locking, Type 6/6 nylon.

1. Minimum Width: 3/16 inch.

2. Tensile Strength at 73 deg F, According to ASTM D 638: 12,000 psi.

3. Temperature Range: Minus 40 to plus 185 deg F.

4. Color: Black except where used for color-coding.

B. UV-Stabilized Cable Ties: Fungus inert, designed for continuous exposure to exterior sunlight, self-extinguishing, one piece, self-locking, Type 6/6 nylon.

1. Minimum Width: 3/16 inch.

2. Tensile Strength at 73 deg F, According to ASTM D 638: 12,000 psi.

3. Temperature Range: Minus 40 to plus 185 deg F.

4. Color: Black.

C. Plenum-Rated Cable Ties: Self-extinguishing, UV stabilized, one piece, self-locking.

1. Minimum Width: 3/16 inch.

2. Tensile Strength at 73 deg F, According to ASTM D 638: 7000 psi.

3. UL 94 Flame Rating: 94V-0.

4. Temperature Range: Minus 50 to plus 284 deg F.

5. Color: Black.

2.11 MISCELLANEOUS IDENTIFICATION PRODUCTS

A. Paint: Comply with requirements in Division 09 painting Sections for paint materials and application requirements. Select paint system applicable for surface material and location (exterior or interior).

B. Fasteners for Labels and Signs: Self-tapping, stainless-steel screws, or stainless-steel machine screws with nuts and flat and lock washers.

PART 3 - EXECUTION

3.01 INSTALLATION - GENERAL

A. Verify identity of each item before installing identification products.

B. Location: Install identification materials and devices at locations for most convenient viewing without interference with operation and maintenance of equipment.

C. Apply identification devices to surfaces that require finish after completing finish work.

D. Self-Adhesive Identification Products: Clean surfaces before application, using materials and methods recommended by manufacturer of identification device.

E. Attach signs and plastic labels that are not self-adhesive type with mechanical fasteners appropriate to the location and substrate.

F. Cable Ties: For attaching tags. Use general-purpose type, except as listed below:

1. Outdoors: UV-stabilized nylon.

2. In Spaces Handling Environmental Air: Plenum rated.

G. Painted Identification: Comply with requirements in Division 09 painting Sections for surface preparation and paint application.

3.02 EQUIPMENT IDENTIFICATION:

A. Label and mark equipment per all applicable codes.

B. On each unit of equipment, install unique designation nameplate that is consistent with naming used in wiring diagrams, schedules, and the Operation and Maintenance Manual.

C. In addition to equipment listed in Part 2 provide nameplates for:

1. Access doors for concealed electrical devices

2. Transformers

3. Substations

4. Enclosed over-current protective devices

5. Electrical cabinets, enclosures, and terminal cabinets

6. Contactors

7. Variable speed drives

8. Battery -inverters, battery racks, UPS equipment

9. Power-generating units

10. Monitoring and control panels and equipment

D. Confirm all final naming prior to label manufacture.

E. Labeling Instructions:

1. Indoor Equipment: Self-adhesive, engraved, laminated acrylic or melamine label.

2. Outdoor Equipment: Engraved, laminated acrylic or melamine label with screw fasteners.

3. Elevated Components: Increase sizes of labels and letters to those appropriate for viewing from the floor.

4. Unless provided with self-adhesive means of attachment, fasten labels with appropriate mechanical fasteners that do not change the NEMA or NRTL rating of the enclosure.

3.03 CIRCUIT CONDUCTOR IDENTIFICATION

A. Power-Circuit Conductor Identification, 600 V or Less:

1. For conductors in vaults, pull and junction boxes, manholes, and handholes, use color-coding conductor tape to identify the phase.

2. Color-Coding for Phase and Voltage Level Identification, 600 V or Less: Use colors listed below for ungrounded service, feeder, and branch-circuit conductors.
   a. Color shall be factory applied or field applied for sizes larger than No. 8 AWG, if authorities having jurisdiction permit.

   b. Colors for 208/120-V Circuits:
      1) Phase A: Black.

      2) Phase B: Red.

      3) Phase C: Blue.

      4) Neutral: White

      5) Equipment Ground: Green

      6) Isolated Ground: Green with yellow tracer
   c. Colors for 480/277-V Circuits:
      1) Phase A: Brown.

      2) Phase B: Orange.

      3) Phase C: Yellow.

      4) Neutral: Gray

5) Equipment Ground: Green

6) Isolated Ground: Green with yellow tracer

d. Field-Applied, Color-Coding Conductor Tape: Apply in half-lapped turns for a minimum distance of 6 inches from terminal points and in boxes where splices or taps are made. Apply last two turns of tape with no tension to prevent unwinding. Locate bands to avoid obscuring factory cable markings.

3. Conductors to Be Extended in the Future: Attach self-adhesive label to conductors and list source.

B. Power-Circuit Conductor Identification, more than 600 V: For conductors in vaults, pull and junction boxes, manholes, and handholes, use metal tags with circuit designation. For conductors to be extended in the future, attach self-metal tag to conductors and list source. Install tags at all points of accessibility including manholes, pad-mounted switches, and interior switchgear. Firmly attach all tags to each cable phase using plastic tie wraps. Position tags so that they are clearly legible to the observer.

C. Auxiliary Electrical Systems Conductor Identification: Identify field-installed alarm, control, and signal connections.

1. Identify conductors, cables, and terminals in enclosures and at junctions, terminals, and pull points. Identify by system and circuit designation.

2. Use system of marker tape designations that is uniform and consistent with system used by manufacturer for factory-installed connections.

3. Coordinate identification with Project Drawings, manufacturer's wiring diagrams, and the Operation and Maintenance Manual.

3.04 RACEWAY IDENTIFICATION

A. Concealed Raceways, Duct Banks, More Than 600 V, within Buildings:

1. Tape and stencil 4-inch- wide black stripes on 10-inch centers over orange background that extends full length of raceway or duct and is 12 inches wide. Stencil legend "DANGER CONCEALED HIGH VOLTAGE WIRING" with 3-inch-high black letters on 20-inch centers. Stop stripes at legends. Apply to the following finished surfaces:
   a. Floor surface directly above conduits running beneath and within 12 inches of a floor that is in contact with earth or is framed above unexcavated space.

   b. Wall surfaces directly external to raceways concealed within wall.

c. Accessible surfaces of concrete envelope around raceways in vertical shafts, exposed in the building, or concealed above suspended ceilings.

B. Accessible Raceways, More Than 600 V: Self-adhesive vinyl or Snap-around labels. Install labels at 10-foot maximum intervals and within each space enclosed by walls.

C. Accessible Raceways and Metal-Clad Cables, 600 V or Less, for Service, Feeder, and Branch Circuits More Than 30A, and 120V to ground: Identify with self-adhesive vinyl label.

1. Install labels at 30-foot maximum intervals.

2. Install minimum one label per enclosed room.

D. System Identification Color-Coding Bands for Raceways: Each color-coding band shall completely encircle raceway. Place adjacent bands of two-color markings in contact, side by side. Locate bands at changes in direction, at penetrations of walls and floors, at 50-foot maximum intervals in straight runs, and at 25-foot maximum intervals in congested areas.

E. Junction Box Color Coding

1. Color Code all junction and pull boxes installed in accessible ceiling spaces and exposed in unfinished areas using spray paint on the box and entire cover in the following manner:

2. **System** **Color**

3. Volt Power Brown

4. 277 volt lighting Yellow

5. 120/208 volt Unpainted

6. Emergency Power Orange

7. Clock & Program Green

8. Fire Alarm Red

9. Telephone/Network Black

10. Nurse Call Light Blue

11. Public Address Silver

12. Television Gold

13. Access Control Gray

14. Intercom White

15. Use black felt tip marker self-adhesive vinyl labels following painting to indicate the circuit numbers in 1" (25mm) high letters contained within.

3.05 WORKING CLEARANCE IDENTIFICATION

A. Workspace Indication: Install floor marking tape to show working clearances in the direction of access to live parts. Workspace shall be as required by NFPA 70 and 29 CFR 1926.403 unless otherwise indicated.

B. Do not install at flush-mounted panelboards and similar equipment in finished spaces.

3.06 UNDER GROUND LINE IDENTIFICATION

A. Locations of Underground Lines: Identify with underground-line warning tape for power, lighting, Retain one of two paragraphs below.

1. Limit use of underground-line warning tape to direct-buried cables.

2. Install underground-line warning tape for direct-buried cables, cables in raceway and duct banks.

B. Underground-Line Warning Tape Installation: During backfilling of trenches install continuous underground-line warning tape directly above line at 6 to 8 inches below finished grade. Use multiple tapes where width of multiple lines installed in a common trench exceeds 16 inches overall.

3.07 POSTED DRAWINGS AND OPERATING INSTRUCTIONS

A. Mount drawings and operating procedures on the wall immediately adjacent to the main piece of equipment for which the instructions apply. If sufficient wall space is available, mount directly to one of the sheet metal panels of the equipment.

B. Color Coding Sign: Install instructional sign for the color-code for grounded and ungrounded conductors using adhesive-film-type labels.

C. Operating Instruction Signs: Install instruction signs to facilitate proper operation and maintenance of electrical systems and items to which they connect. Install instruction signs with approved legend where instructions are needed for system or equipment operation.

D. Emergency Operating Instruction Signs: Install instruction signs with white legend on a red background with minimum 3/8-inch- high letters for emergency instructions at equipment used for power transfer.

3.08 WARNING SIGNS

A. Warning Labels for Indoor Cabinets, Boxes, and Enclosures for Power and Lighting: Metal-backed, butyrate warning signs.

1. Comply with 29 CFR 1910.145.

2. Identify system voltage with black letters on an orange background.

3. Apply to exterior of door, cover, or other access.

4. For equipment with multiple power or control sources, apply to door or cover of equipment including, but not limited to, the following:
   a. Power transfer switches.

   b. Controls with external control power connections.

END OF SECTION

SECTION 26 09 13

ELECTRICAL POWER MONITORING

PART 1 - GENERAL

1.01 RELATED DOCUMENTS

A. Drawings and general provisions of the Contract, including General and Supplementary Conditions and Division 01 Specification Sections, apply to this Section.

1.02 DEFINITIONS

A. Ethernet: Local area network based on IEEE 802.3 standards.

B. Firmware: Software (programs or data) that has been written onto read-only memory (ROM). Firmware is a combination of software and hardware. Storage media with ROMs that have data or programs recorded on them are firmware.

C. HTML: Hypertext markup language.

D. I/O: Input/output.

E. KY Pulse: A term used by the metering industry to describe a method of measuring consumption of electricity that is based on a relay changing status in response to the rotation of the disk in the meter.

F. LAN: Local area network; sometimes plural as "LANs."

G. LCD: Liquid crystal display.

H. Low Voltage: As defined in NFPA 70 for circuits and equipment operating at less than 50 V or remote-control, signaling and power-limited circuits.

I. Modbus TCP/IP: An open protocol for exchange of process data.

J. Monitoring: Acquisition, processing, communication, and display of equipment status data, metered electrical parameter values, power quality evaluation data, event and alarm signals, tabulated reports, and event logs.

K. PC: Personal computer; sometimes plural as "PCs."

L. rms: Root-mean-square value of alternating voltage, which is the square root of the mean value of the square of the voltage values during a complete cycle.

M. RS-232: A TIA standard for asynchronous serial data communications between terminal devices.

N. RS-485: A TIA standard for multipoint communications using two twisted-pairs.

O. TCP/IP: Transport control protocol/Internet protocol incorporated into Microsoft Windows.

P. THD: Total harmonic distortion.

Q. UPS: Uninterruptible power supply; used both in singular and plural context.

R. WAN: Wide area network.

1.03 SUBMITTALS

A. Product Data: For each type of product indicated.

1. Attach copies of approved Product Data submittals for products (such as switchboards and switchgear) that describe power monitoring and control features to illustrate coordination among related equipment and power monitoring and control.

B. Shop Drawings: For power monitoring and control equipment. Include plans, elevations, sections, details, and attachments to other work.

1. Outline Drawings: Indicate arrangement of components and clearance and access requirements.

2. Block Diagram: Show interconnections between components specified in this Section and devices furnished with power distribution system components. Indicate data communication paths and identify networks, data buses, data gateways, concentrators, and other devices to be used. Describe characteristics of network and other data communication lines.

3. Detail equipment assemblies and indicate dimensions, weights, loads, required clearances, method of field assembly, components, and location and size of each field connection.

4. Wiring Diagrams: For power, signal, and control wiring. Coordinate nomenclature and presentation with a block diagram.

5. UPS sizing calculations for workstation.

6. Surge Suppressors: Data for each device used and where applied.

C. Field quality-control reports.

D. Other Informational Submittals:

1. Manufacturer's system installation and setup guides, with data forms to plan and record options and setup decisions.

E. Operation and Maintenance Data: For power monitoring and control units, to include in emergency, operation, and maintenance manuals. In addition include the following:

1. Operating and applications software documentation.

2. Software licenses.

3. Software service agreement.

4. PC installation and operating documentation, manuals, and software for the PC and all installed peripherals. Software shall include system restore, emergency boot diskettes, and drivers for all installed hardware. Provide separately for each PC.

5. Hard copies of manufacturer's specification sheets, operating specifications, design guides, user's guides for software and hardware, and PDF files on CD-ROM of the hard-copy submittal.

F. Software and Firmware Operational Documentation:

1. Self-study guide describing the process for setting equipment's network address; setting Owner's options; procedures to ensure data access from any PC on the network, using a standard Web browser; and recommended firewall setup.

2. Software operating and upgrade manuals.

3. Software Backup: On a magnetic media or compact disc, complete with Owner-selected options.

4. Device address list and the set point of each device and operator option, as set in applications software.

5. Graphic file and printout of graphic screens and related icons, with legend.

G. Software Upgrade Kit: For Owner to use in modifying software to suit future power system revisions or power monitoring and control revisions.

H. Software licenses and upgrades required by and installed for operating and programming digital and analog devices.

I. Furnish extra materials that match products installed and that are packaged with protective covering for storage and identified with labels describing contents.

1. Addressable Relays: One for every 10 installed. Furnish at least one of each type.

2. Data Line Surge Suppressors: One for every 10 of each type installed. Furnish at least one of each type.

1.04 COORDINATION

A. Coordinate features of distribution equipment and power monitoring and control components to form an integrated interconnection of compatible components.

1. Match components and interconnections for optimum performance of specified functions.

B. Coordinate Work of this Section with those in Sections specifying distribution components that are monitored or controlled by power monitoring and control equipment.

1.05 SOFTWARE SERVICE AGREEMENT

A. Technical Support: Beginning with Substantial Completion, provide software support for two years.

B. Upgrade Service: Update software to latest version at Project completion. Install and program software upgrades that become available within two years from date of Substantial Completion. Upgrading software shall include the operating systems. Upgrade shall include new or revised licenses for use of software.

1. Provide 30 days' notice to Owner to allow scheduling and access to system and to allow Owner to upgrade computer equipment if necessary.

PART 2 - PRODUCTS

2.01 MANUFACTURERS

A. Manufacturers: Subject to compliance with requirements, provide products by one of the following:

1. Eaton Corporation; Cutler-Hammer products.

2. General Electric Company; GE Consumer & Industrial.

3. Schneider Electric.

4. Siemens.

5. Or approved equal.

2.02 FUNCTIONAL DESCRIPTION

A. Instrumentation and Recording Devices: Monitor and record load profiles and chart energy consumption patterns.

1. Calculate and Record the Following:

a. Load factor.

b. Peak demand periods.

B. Software: Calculate allocation of utility costs.

1. Automatically Import Energy Usage Records to Allocate Energy Costs for the Following:

a. At least 15 departments.

b. At least 30 tenants.

c. At least five processes.

d. At least five buildings.

C. Power Quality Monitoring: Identify power system anomalies and measure, display, and record trends and alarms of the following power quality parameters:

1. Voltage regulation and unbalance.

2. Continuous three-phase rms voltage.

3. Periodic max./min./avg. voltage samples.

4. Harmonics.

5. Voltage excursions.

D. Demand Management:

1. Peaking or co-generator control.

2. Load interlocking.

3. Load shedding.

4. Load trimming.

E. System: Report equipment status and power system control.

2.03 SYSTEM REQUIREMENTS

A. Monitoring and Control System: Include multiple PC-based workstation(s) with graphics capability and Web access, with its operating system and application software, connected to data transmission network.

B. Surge Protection: For external wiring of each conductor entry connection to components to protect components from voltage surges originating external to equipment housing and entering through power, communication, signal, control, or sensing leads.

1. Minimum Protection for Power Lines 120 V and More: Auxiliary panel suppressors complying with requirements.

2. Minimum Protection for Communication, Signal, Control, and Low-Voltage Power Lines: Comply with requirements as recommended by manufacturer for type of line being protected.

C. Addressable Devices: All transmitters and receivers shall communicate unique device identification and status reports to monitoring and control clients.

D. BAS Interface: Provide factory-installed hardware and software to enable the BAS to monitor, display, and record data for use in processing reports.

1. Hardwired Monitoring Points: Electrical power demand (kilowatts), electrical power consumption (kilowatt-hours), power factor.

2. ASHRAE 135 (BACnet) Modbus communication interface with the BAS shall enable the BAS operator to remotely monitor meter information from a BAS operator workstation. Control features and monitoring points displayed locally at metering panel shall be available through the BAS.

2.04 OPERATING SYSTEM

A. Software: Configured to run on a portable laptop computer, a single PC, or a palm computer, with capability for accessing a single meter at a time. System is not connected to a LAN. Modbus TCP/IP, RS-232, and RS-485 digital communications.

B. Software: Configured to run on a single PC, with capability for accessing multiple devices simultaneously. Modbus TCP/IP, RS-232, and RS-485 digital communications.

C. Software: Configured for a server and multiple client PCs, each with capability for accessing multiple devices simultaneously. Ethernet, Modbus TCP/IP, RS-232, and RS-485 digital communications.

D. Software: Configured for a server and multiple client PCs, each with capability for accessing multiple devices simultaneously. Software shall include interactive graphics client and shall be Web enabled. Workstations and portable computers shall not require any software except for an Internet browser to provide connectivity and full functionality. Include a firewall recommended by manufacturer. 100 Base-T Ethernet, Modbus TCP/IP RS-232, and RS-485 digital communications.

E. Operating System Software: Based on 32 -bit, Microsoft Windows workstation operating system. Software shall have the following features:

1. Multiuser and multitasking to allow independent activities and monitoring to occur simultaneously at different workstations.

2. Graphical user interface to show pull-down menus and a menu tree format.

3. Capability for future additions within the indicated system size limits.

F. Peer Computer Control Software: Shall detect a failure of workstation and associated server, and shall cause other workstation and associated server to assume control of all system functions without interruption of operation. Drivers shall be provided in both central computers to support this mode of operation.

2.05 APPLICATIONS SOFTWARE

A. Basic Requirements:

1. Fully compatible with and based on the approved operating system.

2. Password-protected operator login and access; three levels, minimum.

3. Password-protected setup functions.

4. Context-sensitive online help.

5. Capability of creating, deleting, and copying files; and automatically maintaining a directory of all files, including size and location of each sequential and random-ordered record.

6. Capability for importing custom icons into graphic views to represent alarms and I/O devices.

7. Automatic and encrypted backups for database and history; automatically stored at central control PC and encrypted with a nine-character alphanumeric password, which must be used to restore or read data contained in backup.

8. Operator audit trail for recording and reporting all changes made to user-defined system options.

B. Workstation Server Functions:

1. Support other client PCs on the LAN.

2. Maintain recorded data in databases accessible from other PCs on the LAN.

C. Data Formats:

1. User-programmable export and import of data to and from commonly used Microsoft Windows spreadsheet, database, billing, and other applications; using dynamic data exchange technology.

2. Option to convert reports and graphics to HTML format.

3. Interactive graphics.

4. Option to send preprogrammed or operator designed e-mail reports.

D. Metered Data: Display metered values in real time.

E. Equipment Documentation: Database for recording of equipment ratings and characteristics; with capability for graphic display on monitors.

F. Graphics: Interactive color-graphics platform with pull-down menus and mouse-driven generation of power system graphics, in formats widely used for such drafting; to include the following:

1. Site plan.

2. Floor plans.

3. Equipment elevations.

4. Single-line diagrams.

G. User-Defined Monitoring: Display and record with date and time stamps accurate to 0.1 second, and including the following:

1. Operator log on/off.

2. Attempted operator log on/off.

3. All alarms.

4. Equipment operation counters.

5. Out-of-limit, pickup, trip, and no-response events.

H. Trending Reports: Display data acquired in real-time from different meters or devices, in historical format over user-defined time; unlimited as to interval, duration, or quantity of trends.

1. Spreadsheet functions of sum, delta, percent, average, mean, standard deviation, and related functions applied to recorded data.

2. Charting, statistical, and display functions of standard Windows-based spreadsheet.

I. Alarms: Display and record alarm messages from discrete input and controls outputs, according to user programmable protocol.

1. Functions requiring user acknowledgment shall run in background during computer use for other applications and override other presentations when they occur.

J. Waveform Data: Display and record waveforms on demand or automatically on an alarm or programmed event. Include the graphic displays of the following, based on user-specified criteria:

1. Phase voltages, phase currents, and residual current.

2. Overlay of three-phase currents, and overlay each phase voltage and current.

3. Waveforms ranging in length from 2 cycles to 5 minutes.

4. Disturbance and steady-state waveforms up to 512 points per cycle.

5. Transient waveforms up to 83,333 points per cycle on 60-Hz base.

6. Calculated waveform, based on recorded data, on a minimum of four cycles of data of the following:

a. THD.

b. rms magnitudes.

c. Peak values.

d. Crest factors.

e. Magnitude of individual harmonics.

K. Data Sharing: Allow export of recorded displays and tabular data to third-party applications software.

1. Tabular data shall be in the comma-separated values.

L. Activity Billing Software:

1. Automatically compute and prepare activity demand and energy-use statements based on metering of energy use and peak demand integrated over user-defined interval.

2. Intervals shall be same as used by electric utilities, including current vendor.

3. Import metered data from saved records that were generated by metering and monitoring software.

4. Maintain separate directory for each activity's historical billing information.

5. Prepare summary reports in user-defined formats and time intervals.

M. Reporting: User commands initiate the reporting of a list of current alarm, supervisory, and trouble conditions in system or a log of past events.

1. Print a record of user-defined alarm, supervisory, and trouble events on workstation printer.

2. Sort and report by device name and by function.

3. Report type of signal (alarm, supervisory, or trouble), description, date, and time of occurrence.

4. Differentiate alarm signals from other indications.

5. When system is reset, report reset event with same information concerning device, location, date, and time.

N. Display Monitor:

1. Backlighted LCD to display metered data with touch-screen selecting device.

2. Touch-screen display shall be a minimum 12-inch diagonal, resolution of 800 by 600 RGB pixels, 256 colors; NEMA 250, Type 1 display enclosure.

3. Display four values on one screen at same time.

2.06 COMMUNICATION COMPONENTS AND NETWORKS

A. Network Configuration: High-speed, multi-access, open nonproprietary, industry standard communication protocol; LANs complying with EIA 485, 100 Base-T Ethernet, and Modbus TCP/IP.

2.07 POWER MONITORS

A. Type M

1. General

a. Permanently installed instrument for power monitoring and control, complying with UL 1244.

b. Mounting: Separately mounted in NEMA 250, Type 1 enclosure.

2. Rms Real-Time Measurements:

a. Current: Each phase, neutral, average of three phases, percent unbalance.

b. Voltage: Line-to-line each phase, line-to-line average of three phases, line-to-neutral each phase, line-to-neutral average of three phases, line-to-neutral percent unbalance.

c. Power: Per phase and three-phase total.

d. Reactive Power: Per phase and three-phase total.

e. Apparent Power: Per phase and three-phase total.

f. Power Factor: Per phase and three-phase total.

g. Displacement Power Factor: Per phase and three-phase total.

h. Frequency.

i. THD: Current and voltage.

j. Accumulated Energy: Real kWh, reactive kVARh, apparent kVAh (signed/absolute).

k. Incremental Energy: Real kWh, reactive kVARh, apparent kVAh (signed/absolute).

l. Conditional Energy: Real kWh, reactive kVARh, apparent kVAh (signed/absolute).

3. Demand Current Calculations, per Phase, Three-Phase Average and Neutral:

a. Present.

b. Running average.

c. Last completed interval.

d. Peak.

4. Demand Real Power Calculations, Three-Phase Total:

a. Present.

b. Running average.

c. Last completed interval.

d. Predicted.

e. Peak.

f. Coincident with peak kVA demand.

g. Coincident with kVAR demand.

5. Demand Reactive Power Calculations, Three-Phase Total:

a. Present.

b. Running average.

c. Last completed interval.

d. Predicted.

e. Peak.

f. Coincident with peak kVA demand.

g. Coincident with kVAR demand.

6. Demand Apparent Power Calculations, Three-Phase Total:

a. Present.

b. Running average.

c. Last completed interval.

d. Predicted.

e. Peak.

f. Coincident with peak kVA demand.

g. Coincident with kVAR demand.

7. Average Power Factor Calculations, Demand Coincident, Three-Phase Total:

a. Last completed interval.

b. Coincident with kW peak.

c. Coincident with kVAR peak.

d. Coincident with kVA peak.

8. Power Analysis Values:

a. THD, Voltage and Current: Per phase, three phase, and neutral.

b. Displacement Power Factor: Per phase, three phase.

c. Fundamental Voltage, Magnitude and Angle: Per phase.

d. Fundamental Currents, Magnitude and Angle: Per phase.

e. Fundamental Real Power: Per phase, three phase.

f. Fundamental Reactive Power: Per phase.

g. Harmonic Power: Per phase, three phase.

h. Phase rotation.

i. Unbalance: Current and voltage.

j. Harmonic Magnitudes and Angles for Current and Voltages: Per phase, up to 50th harmonic.

9. Power Demand Calculations: According to one of the following calculation methods, selectable by the user:

a. Thermal Demand: Sliding window updated every second for the present demand and at end of the interval for the last interval. Adjustable window that can be set in 1-minute intervals, from 1 to 60 minutes.

b. Block Interval with Optional Subintervals: Adjustable for 1-minute intervals, from 1 to 60 minutes. User-defined parameters for the following block intervals:

1) Sliding block that calculates demand every second, with intervals less than 15 minutes, and every 15 seconds with an interval between 15 and 60 minutes.

2) Fixed block that calculates demand at end of the interval.

3) Rolling block subinterval that calculates demand at end of each subinterval and displays it at end of the interval.

c. Demand Calculation Initiated by a Synchronization Signal:

1) Signal is a pulse from an external source. Demand period begins with every pulse. Calculation shall be configurable as either a block or rolling block calculation.

2) Signal is a communication signal. Calculation shall be configurable as either a block or rolling block calculation.

3) Demand can be synchronized with clock in the power meter.

d. Sampling:

1) Current and voltage shall be digitally sampled at a rate high enough to provide accuracy to 63rd harmonic of 60-Hz fundamental.

2) Power monitor shall provide continuous sampling at a rate of 128 samples per cycle on all voltage and current channels in the meter.

e. Minimum and Maximum Values: Record monthly minimum and maximum values, including date and time of record. For three-phase measurements, identify phase of recorded value. Record the following parameters:

1) Line-to-line voltage.

2) Line-to-neutral voltage.

3) Current per phase.

4) Line-to-line voltage unbalance.

5) Line-to-neutral voltage unbalance.

6) Power factor.

7) Displacement power factor.

8) Total power.

9) Total reactive power.

10) Total apparent power.

11) THD voltage L-L.

12) THD voltage L-N.

13) THD current.

14) Frequency.

f. Harmonic Calculation: Display and record the following:

1) Harmonic magnitudes and angles for each phase voltage and current through 50th harmonic. Calculate for all three phases, current and voltage, and residual current. Current and voltage information for all phases shall be obtained simultaneously from same cycle.

2) Harmonic magnitude reported as a percentage of the fundamental or as a percentage of rms values, as selected by user.

g. Current and Voltage Ratings:

1) Designed for use with current inputs from standard instrument current transformers with 5-A secondary and shall have a metering range of 0-10 A.

2) Withstand ratings shall not be less than 15 A, continuous; 50 A, lasting over 10 seconds, no more frequently than once per hour; 500 A, lasting 1 second, no more frequently than once per hour.

3) Designed for use with voltage inputs from standard instrument potential transformers with a 120-V secondary.

10. Accuracy:

a. Comply with ANSI C12.20, Class 0.5; and IEC 60687, Class 0.5 for revenue meters. Accuracy from Light to Full Rating shall meet the following criteria:

1) Power: Accurate to 0.25 percent of reading, plus 0.025 percent of full scale.

2) Voltage and Current: Accurate to 0.075 percent of reading, plus 0.025 percent of full scale.

3) Power Factor: Plus or minus 0.002, from 0.5 leading to 0.5 lagging.

4) Frequency: Plus or minus 0.01 Hz at 45 to 67 Hz.

b. For meters that are circuit-breaker accessories, metering accuracy at full-scale shall not be less than the following:

1) Current: Plus or minus 2.5 percent.

2) Voltage: Plus or minus 1.5 percent.

3) Energy, Demand, and Power: Plus or minus 4.0 percent.

4) Frequency: Plus or minus 1 Hz.

11. Waveform Capture:

a. Capture and store steady-state waveforms of voltage and current channels; initiated manually. Each capture shall be for 3 cycles, 128 data points for each cycle, allowing resolution of harmonics to 50th harmonic of basic 60 Hz.

b. Store captured waveforms in internal nonvolatile memory; available for PC display, archiving, and analysis.

12. Input: digital input signal(s).

    a. Normal mode for on/off signal.

    b. Demand interval synchronization pulse, accepting a demand synchronization pulse from a utility demand meter.

    c. Conditional energy signal to control conditional energy accumulation.

13. Outputs:

    a. Operated either by user command sent via communication link, or set to operate in response to user-defined alarm or event.

    b. Closed in either a momentary or latched mode as defined by user.

    c. Each output relay used in a momentary contact mode shall have an independent timer that can be set by user.

    d. One digital KY pulse to a user-definable increment of energy measurement. Output ratings shall be up to 120-V ac, 300-V dc, 50 mA, and provide 3500-V rms isolation.

    e. relay output module(s), providing a load voltage range from 20- to 240-V ac or from 20- to 30-V dc, supporting a load current of 2 A.

    f. Output Relay Control:

        1) Relay outputs shall operate either by user command sent via communication link or in response to user-defined alarm or event.

        2) Normally open and normally closed contacts, field configured to operate as follows:

            a) Normal contact closure where contacts change state for as long as signal exists.

            b) Latched mode when contacts change state on receipts of a pickup signal; changed state is held until a dropout signal is received.

            c) Timed mode when contacts change state on receipt of a pickup signal; changed state is held for a preprogrammed duration.

            d) End of power demand interval when relay operates as synchronization pulse for other devices.

e) Energy Pulse Output: Relay pulses quantities used for absolute kWh, absolute kVARh, kVAh, kWh In, kVARh In, kWh Out, and kVARh Out.

f) Output controlled by multiple alarms using Boolean-type logic.

14. Onboard Data Logging:

a. Store logged data, alarms, events, and waveforms in 2MB of onboard nonvolatile memory.

b. Stored Data:

1) Billing Log: User configurable; data shall be recorded every 15 minutes, identified by month, day, and 15-minute interval. Accumulate 24 months of monthly data, 32 days of daily data, and between 2 and 52 days of 15-minute interval data, depending on number of quantities selected.

2) Custom Data Logs: user-defined log(s) holding up to 96 parameters. Date and time stamp each entry to the second and include the following user definitions:

a) Schedule interval.

b) Event definition.

c) Configured as "fill-and-hold" or "circular, first-in first-out."

3) Alarm Log: Include time, date, event information, and coincident information for each defined alarm or event.

4) Waveform Log: Store captured waveforms configured as "fill-and-hold" or "circular, first-in first-out."

c. Default values for all logs shall be initially set at factory, with logging to begin on device power up.

15. Alarms.

a. User Options:

1) Define pickup, dropout, and delay.

2) Assign one of four severity levels to make it easier for user to respond to the most important events first.

3) Allow for combining up to four alarms using Boolean-type logic statements for outputting a single alarm.

b. Alarm Events:

1) Over/undercurrent.

2) Over/undervoltage.

3) Current imbalance.

4) Phase loss, current.

5) Phase loss, voltage.

6) Voltage imbalance.

7) Over kW demand.

8) Phase reversal.

9) Digital input off/on.

10) End of incremental energy interval.

11) End of demand interval.

16. Control Power: 90- to 457-V ac or 100- to 300-V dc.

17. Communications:

a. Power monitor shall be permanently connected to communicate via Modbus TCP via a 100 Base-T Ethernet.

b. Local plug-in connections shall be for RS-232 and 100 Base-T Ethernet.

18. Display Monitor:

a. Backlighted LCD to display metered data with touch-screen selecting device.

b. Touch-screen display shall be a minimum 12-inch diagonal, resolution of 800 by 600 RGB pixels, 256 colors; NEMA 250, Type 1 display enclosure.

c. Display four values on one screen at same time.

1) Current, per phase rms, three-phase average and neutral.

2) Voltage, phase to phase, phase to neutral, and three-phase averages of phase to phase and phase to neutral.

3) Real power, per phase and three-phase total.

4) Reactive power, per phase and three-phase total.

5) Apparent power, per phase and three-phase total.

6) Power factor, per phase and three-phase total.

7) Frequency.

8) Demand current, per phase and three-phase average.

9) Demand real power, three-phase total.

10) Demand apparent power, three-phase total.

11) Accumulated energy (MWh and MVARh).

12) THD, current and voltage, per phase.

d. Reset: Allow reset of the following parameters at the display:

1) Peak demand current.

2) Peak demand power (kW) and peak demand apparent power (kVA).

3) Energy (MWh) and reactive energy (MVARh).

B. Type F

1. General

a. Permanently installed instrument for power monitoring and control, complying with UL 1244.

b. Mounting**:** Panel mounted on face of associated gear or board.

2. Rms Real-Time Measurements:

a. Current: Each phase, neutral.

b. Voltage: Line-to-line each phase, line-to-line average of three phases, line-to-neutral each phase.

c. Power: Per phase and three-phase total.

d. Reactive Power: Per phase and three-phase total.

e. Apparent Power: Per phase and three-phase total.

f. Power Factor: Per phase and three-phase total.

g. Displacement Power Factor: Per phase and three-phase total.

h. Frequency.

i. THD: Current and voltage.

j. Accumulated Energy: Real kWh, reactive kVARh, apparent kVAh (signed/absolute).

3. Maximum Demand Current Calculations, per Phase,:

a. Last completed interval.

b. Peak.

4. Demand Real Power Calculations, Three-Phase Total:

a. Present.

b. Running average.

c. Last completed interval.

d. Cumulative

5. Demand Reactive Power Calculations, Three-Phase Total:

a. Present.

b. Running average.

c. Last completed interval.

d. Cumulative

6. Demand Apparent Power Calculations, Three-Phase Total:

a. Present.

b. Running average.

c. Last completed interval.

d. Cumulative

7. Power Analysis Values:

a. THD, Voltage and Current: Per phase, three phase, and neutral.

b. Displacement Power Factor: Per phase, three phase.

8. Display: LED, 3 lines 4 characters

9. Communicaitons: Serial data, Modbus RTU, DNP 3.0

C. Meter appurtenances:

1. Current transformers sized to match current carrying capacity of bus or cable, 0.2% accuracy, ANSI C12.20. Test block

2. Fused tap for voltages.

3. Label identifying metered load

2.08 STANDALONE, WEB-ENABLED MONITORING AND CONTROL INSTRUMENT

A. Separately mounted, permanently installed instrument for power monitoring and control.

1. Enclosure: NEMA 250, Type 1.

B. Power-Distribution Equipment Monitor: Web enabled, with integral network port and embedded Web server with factory-configured firmware and HTML-formatted Web pages for viewing of power monitoring and equipment status information from connected devices equipped with digital communication ports.

C. LAN Connectivity: Multipoint, RS-485 Modbus serial communication network, interconnecting all breaker trip units, protective relays, drives, and metering devices equipped with communications. Serial communication network connected to Ethernet server that functions as a gateway and server, providing data access via 10 Base-T LAN.

D. Communication Devices within the Equipment: Addressed at factory and tested to verify reliable communication with network server.

E. Server Configuration:

1. Initial network parameters set using a standard Web browser. Connect via a local operator interface, or an RJ-45 port accessible from front of equipment.

2. Network server shall be factory programmed with embedded HTML-formatted Web pages that are user configurable and that provide detailed communication diagnostic information for serial and Ethernet ports as status of RS-485 network; with internal memory management information pages for viewing using a standard Web browser.

3. Login: Password protected; password administration accessible from the LAN using a standard Web browser.

4. Operating Software: Suitable for local access; firewall protected.

F. Data Access:

1. Network server shall include embedded HTML pages providing real-time information from devices connected to RS-485 network ports via a standard Web browser.

G. Equipment Monitoring Options: Login shall be followed by a main menu for selecting summary Web pages that follow.

H. Summary Web pages shall be factory configured to display the following information for each communicating device within the power equipment lineup:

1. User-Configured Custom Home Page: Provide for the lineup, showing status-at-a-glance of key operating values.

2. Circuit Summary Page: Circuit name, three-phase average rms current, power (kW), power factor, and breaker status.

3. Load Current Summary Page: Circuit name, Phase A, B, and C rms current values.

4. Demand Current Summary Page: Circuit name, Phase A, B, and C average demand current values.

5. Power Summary Page: Circuit name, present demand power (kW), peak demand power (kW), and recorded time and date.

6. Energy Summary Page: Circuit name, energy (kWh), reactive energy (kVARh), and time/date of last reset.

7. Transformer Status Page: Transformer tag, coil temperatures, and cooling fan status.

8. Motor-Control Center Status Page: Circuit name, three-phase average rms current, thermal capacity (percentage), and drive output frequency (Hz) contactor status.

9. Specific Device Pages: Each individual communicating device shall display detailed, real-time information, as appropriate for device type.

   a. Display historical energy data that shall be logged automatically for each device, as appropriate for device type.

   b. Display historical data logged from each device in graphical time-trend plots. Value to be displayed on time-trend plot shall be user selectable. Time interval to be displayed on scale shall be for previous day or week.

10. Export historical energy data to a PC or workstation through network using FTP (File Transfer Protocol). Format exported data in a CSV (Comma Separated Variable) file format for importing into spreadsheet applications.

I. Communications:

1. Power monitor: Permanently connected to communicate via Modbus TCP via a 100 Base-T Ethernet.

2. Local Plug-in Connections: RS-232 and 100 Base-T Ethernet.

3. Monitor Display: Backlighted LCD to display metered data with touch-screen selecting device.

2.09 WORKSTATION HARDWARE

A. Computer: Standard unmodified PC of modular design, designed for the latest version of Windows operating system.

1. Memory: of usable installed memory.

2. Real-Time Clock. Automatic time correction once every 24 hours by synchronizing clock with the Time Service Department of the U.S. Naval Observatory.

3. Ports: Two RS-232-F serial ports for general use; one parallel port; four USB ports

4. Replaceable graphics board.

5. LAN Adapter Card.

6. Sound Card: For playback and recording of digital WAV sound files associated with audible warning and alarm functions.

7. Color Monitor: WXGA TFT, not less than 18 inches, LED type.

8. Keyboard: US English.

9. Mouse: Standard.

10. Minimum Disk Storage: 7200 rpm hard drive.

11. Modem: bps, full duplex for asynchronous communications. With error detection, auto answer/autodial, and call-in-progress detection suitable for operating on unconditioned voice-grade telephone line.

12. CD-RW/DVD-ROM Drive.

13. Report Printer: Minimum resolution 600 dpi laser printer.

    a. Connected to central station and designated workstations.

    b. RAM: 8 MB, minimum.

    c. Printing Speed: Minimum 30 pages per minute.

    d. Paper Handling: Automatic sheet feeder with 250-sheet paper cassette and with automatic feed.

B. UPS: Self-contained; complying with requirements:

1. Size: Provide a minimum of 6 hours of operation of workstation station equipment, including 2 hours of alarm printer operation.

2. Batteries: Sealed, valve regulated, recombinant, lead calcium.

3. Accessories:

    a. Transient voltage suppression.

b. Input-harmonics reduction.

c. Rectifier/charger.

d. Battery disconnect device.

2.10 RS-232 ASCII INTERFACE

A. ASCII interface shall allow RS-232 connections to be made between a meter or circuit monitor operating as the host PC and any equipment that will accept RS-232 ASCII command strings, such as local display panels.

B. Pager System Interface: Alarms shall be able to activate a pager system with customized message for each input alarm.

1. RS-232 output shall be capable of connection to a pager interface that can be used to call a paging system or service and send a signal to a portable pager. System shall allow an individual alphanumeric message per alarm input to be sent to paging system. This interface shall support both numeric and alphanumeric pagers.

C. Alarm System Interface:

1. RS-232 output shall be capable of transmitting alarms from other monitoring and alarm systems to workstation software.

D. Cables:

1. PVC-Jacketed, RS-232 Cable: Paired, 2 pairs, No. 22 AWG, stranded (7x30) tinned copper conductors, polypropylene insulation, and individual aluminum foil-polyester tape shielded pairs with 100 percent shield coverage; PVC jacket. Pairs are cabled on common axis with No. 24 AWG, stranded (7x32) tinned copper drain wire.

a. NFPA 70, Type CM.

b. Flame Resistance: UL 1581, Vertical Tray.

2. Plenum-Type, RS-232 Cable: Paired, 2 pairs, No. 22 AWG, stranded (7x30) tinned copper conductors, plastic insulation, and individual aluminum foil-polyester tape shielded pairs with 100 percent shield coverage; plastic jacket. Pairs are cabled on common axis with No. 24 AWG, stranded (7x32) tinned copper drain wire.

a. NFPA 70, Type CMP.

b. Flame Resistance: NFPA 262, Flame Test.

2.11 LAN CABLES

A. RS-485 Cable:

1. PVC-Jacketed, RS-485 Cable: Paired, 2 pairs, twisted, No. 22 AWG, stranded (7x30) tinned copper conductors, PVC insulation, unshielded, PVC jacket, and NFPA 70, Type CMG.

2. Plenum-Type, RS-485 Cable: Paired, 2 pairs, No. 22 AWG, stranded (7x30) tinned copper conductors, fluorinated-ethylene-propylene insulation, unshielded, and fluorinated-ethylene-propylene jacket, and NFPA 70, Type CMP.

B. Unshielded Twisted Pair Cables: Category 5e as specified for horizontal cable for data service

2.12 LOW-VOLTAGE WIRING

A. Comply with Section 260523 "Control-Voltage Electrical Power Cables."

B. Low-Voltage Control Cable: Multiple conductor, color-coded, No. 20 AWG copper, minimum.

1. Sheath: PVC; except in plenum-type spaces, use sheath listed for plenums.

2. Ordinary Switching Circuits: Three conductors unless otherwise indicated.

3. Switching Circuits with Pilot Lights or Locator Feature: Five conductors unless otherwise indicated.

PART 3 - EXECUTION

3.01 EXAMINATION

A. Examine pathway elements intended for cables. Check raceways, cable trays, and other elements for compliance with space allocations, installation tolerances, hazards to cable installation, and other conditions affecting installation.

1. Proceed with installation only after unsatisfactory conditions have been corrected.

3.02 CABLING

A. Comply with NECA 1.

B. Wiring Method: Install wiring in raceway and cable tray except within consoles, cabinets, desks, and counters. Conceal raceway and wiring except in unfinished spaces.

C. Wiring Method: Install wiring in raceway and cable tray except within consoles, cabinets, desks, and counters and except in accessible ceiling spaces and in gypsum board partitions where unenclosed wiring method may be used. Use NRTL-listed plenum cable in environmental air spaces, including plenum ceilings. Conceal raceway and cables except in unfinished spaces.

D. Install LAN cables using techniques, practices, and methods that are consistent with specified category rating of components and that ensure specified category performance of completed and linked signal paths, end to end.

E. Install cables without damaging conductors, shield, or jacket.

3.03 IDENTIFICATION

A. Identify components and power and control wiring according to Section 26 05 53 "Identification for Electrical Systems."

B. Label each power monitoring and control module with a unique designation.

3.04 GROUNDING

A. Comply with IEEE 1100, "Recommended Practice for Powering and Grounding Electronic Equipment."

3.05 FIELD QUALITY CONTROL

A. Testing Agency: Owner will engage a qualified testing agency to perform tests and inspections.

B. Manufacturer's Field Service: Engage a factory-authorized service representative to inspect, test, and adjust components, assemblies, and equipment installations, including connections.

C. Perform tests and inspections.

1. Manufacturer's Field Service: Engage a factory-authorized service representative to inspect components, assemblies, and equipment installations, including connections, and to assist in testing.

D. Tests and Inspections:

1. Electrical Tests: Use caution when testing devices containing solid-state components.

2. Continuity tests of circuits.

3. Operational Tests: Set and operate controls at workstation and at monitored and controlled devices to demonstrate their functions and capabilities. Use a methodical sequence that cues and reproduces actual operating functions as recommended by manufacturer. Submit sequences for approval. Note response to each test command and operation. Note time intervals between initiation of alarm conditions and registration of alarms at central-processing workstation.

   a. Coordinate testing required by this Section with that required by Sections specifying equipment being monitored and controlled.

   b. Test LANs

   c. System components with battery backup shall be operated on battery power for a period of not less than 10 percent of calculated battery operating time.

   d. Verify accuracy of graphic screens and icons.

   e. Metering Test: Load feeders, measure loads on feeder conductor with an rms reading clamp-on ammeter, and simultaneously read indicated current on the same phase at central-processing workstation. Record and compare values measured at the two locations. Resolve discrepancies greater than 5 percent and record resolution method and results.

   f. Record metered values, control settings, operations, cues, time intervals, and functional observations and submit test reports printed by workstation printer.

E. Power monitoring and control equipment will be considered defective if it does not pass tests and inspections.

F. Prepare test and inspection reports.

G. Correct deficiencies, make necessary adjustments, and retest. Verify that specified requirements are met.

H. Test Labeling: After satisfactory completion of tests and inspections, apply a label to tested components indicating test results, date, and responsible agency and representative.

I. Reports: Written reports of tests and observations. Record defective materials and workmanship and unsatisfactory test results. Record repairs and adjustments.

J. Remove and replace malfunctioning devices and circuits and retest as specified above.

3.06 DEMONSTRATION

A. Engage a factory-authorized service representative to train Owner's maintenance personnel to adjust, operate, and maintain systems.

1. Train Owner's management and maintenance personnel in interpreting and using monitoring displays and in configuring and using software and reports. Include troubleshooting, servicing, adjusting, and maintaining equipment. Provide a minimum of 12 hours' training.

2. Training Aid: Use approved final versions of software and maintenance manuals as training aids.

3.07 ON-SITE ASSISTANCE

A. Occupancy Adjustments: When requested within 12 months of date of Substantial Completion, provide on-site assistance in adjusting system to suit actual occupied conditions. Provide up to three visits to Project during other-than-normal occupancy hours for this purpose.

END OF SECTION

SECTION 26 27 26

WIRING DEVICES

PART 1 - GENERAL

1.01 RELATED DOCUMENTS

A. Drawings and general provisions of the Contract, including General and Supplementary Conditions and Division 01 Specification Sections, apply to this Section.

1.02 SUMMARY

A. Section Includes:

1. Receptacles, receptacles with integral GFCI, and associated device plates.
2. Twist-locking receptacles.
3. Receptacles with integral surge-suppression units.
4. Wall-box motion sensors.
5. Isolated-ground receptacles.
6. Hospital-grade receptacles.
7. Tamper-resistant receptacles.
8. Weather-resistant receptacles.
9. Combination receptacles and USB chargers.
10. Solid-state fan speed controls.
11. Communications outlets.
12. Pendant cord-connector devices.
13. Cord and plug sets.
14. Floor service outlets, poke-through assemblies, service poles, and multioutlet assemblies.

1.03 DEFINITIONS

A. EMI: Electromagnetic interference.

B. GFCI: Ground-fault circuit interrupter.

C. Pigtail: Short lead used to connect a device to a branch-circuit conductor.

D. RFI: Radio-frequency interference.

E. TVSS: Transient voltage surge suppressor.

F. UTP: Unshielded twisted pair.

1.04 ADMINISTRATIVE REQUIREMENTS

A. Coordination:

1. Receptacles for Owner-Furnished Equipment: Match plug configurations.

2. Cord and Plug Sets: Match equipment requirements.

1.05 ACTION SUBMITTALS

A. Product Data: For each type of product.

B. Shop Drawings: List of legends and description of materials and process used for pre-marking wall plates.

C. Samples: One for each type of device and wall plate specified, in each color specified.

1.06 INFORMATIONAL SUBMITTALS

A. Field quality-control reports.

1.07 CLOSEOUT SUBMITTALS

A. Operation and Maintenance Data: For wiring devices to include in all manufacturers' packing-label warnings and instruction manuals that include labeling conditions.

1.08 MAINTENANCE MATERIAL SUBMITTALS

A. Furnish extra materials that match products installed and that are packaged with protective covering for storage and identified with labels describing contents.

1. Service/Power Poles: One for every 10, but no fewer than one.

2. Floor Service-Outlet Assemblies: One for every 10, but no fewer than one.

3. TVSS Receptacles: One for every 10 of each type installed, but no fewer than two of each type.

PART 2 - PRODUCTS

2.01 MANUFACTURERS

A. Manufacturers' Names: Shortened versions (shown in parentheses) of the following manufacturers' names are used in other Part 2 articles:

1. Cooper Wiring Devices; Division of Cooper Industries, Inc. (Cooper).

2. Hubbell Incorporated; Wiring Device-Kellems (Hubbell).

3. Leviton Mfg. Company Inc. (Leviton).

4. Pass & Seymour/Legrand (Pass & Seymour).

5. Or approved equal.

B. Source Limitations: Obtain each type of wiring device and associated wall plate from single source from single manufacturer.

2.02 GENERAL WIRING-DEVICE REQUIREMENTS

A. Wiring Devices, Components, and Accessories: Listed and labeled as defined in NFPA 70, by a qualified testing agency, and marked for intended location and application.

B. Comply with NFPA 70.

1. Receptacles controlled by an energy management device shall be marked with the symbol required by NEC section 406.3(E), Controlled Receptacle Marking. The marking shall consist of imprinting “CONTROLLED” and the NEC symbol on the receptacle.

C. Devices that are manufactured for use with modular plug-in connectors may be substituted under the following conditions:

1. Connectors shall comply with UL 2459 and shall be made with stranding building wire.

2. Devices shall comply with the requirements in this Section.

2.03 STRAIGHT-BLADE RECEPTACLES

A. Convenience Receptacles, 125 V, 20 A: Comply with NEMA WD 1, NEMA WD 6 Configuration 5-20R, UL 498, and FS W-C-596.

1. Products: Subject to compliance with requirements, available products that may be incorporated into the Work include, but are not limited to, the following:

a. Cooper; 5351 (single), CR5362 (duplex).

b. Hubbell; HBL5351 (single), HBL5352 (duplex).

c. Leviton; 5891 (single), 5352 (duplex).

d. Pass & Seymour; 5361 (single), 5362 (duplex).

e. Or approved equal.

B. Hospital-Grade, Duplex Convenience Receptacles, 125 V, 20 A: Comply with NEMA WD 1, NEMA WD 6 Configuration 5-20R, UL 498 Supplement sd, and FS W-C-596.

1. Products: Subject to compliance with requirements, available products that may be incorporated into the Work include, but are not limited to, the following:

a. Cooper; 8310 (single), 8300 (duplex).

b. Hubbell; HBL8310 (single), HBL8300 (duplex).

c. Leviton; 8310 (single), 8300 (duplex).

d. Pass & Seymour; 8301 (single), 8300H (duplex).

e. Or approved equal.

2. Description: Single-piece, rivetless, nickel-plated, all-brass grounding system. Nickel-plated, brass mounting strap.

C. Isolated-Ground, Duplex Convenience Receptacles, 125 V, 20 A: Comply with NEMA WD 1, NEMA WD 6 Configuration 5-20R, UL 498, and FS W-C-596.

1. Products: Subject to compliance with requirements, available products that may be incorporated into the Work include, but are not limited to, the following:

a. Cooper; IG5362RN.

b. Hubbell; IG5362.

c. Leviton; 5362-IG.

d. Pass & Seymour; IG5362.

e. Or approved equal.

2. Description: Straight blade; equipment grounding contacts shall be connected only to the green grounding screw terminal of the device and with inherent electrical isolation from mounting strap. Isolation shall be integral to receptacle construction and not dependent on removable parts.

D. Tamper-Resistant Convenience Receptacles, 125 V, 20 A: Comply with NEMA WD 1, NEMA WD 6 Configuration 5-20R, UL 498 Supplement sd, and FS W-C-596.

1. Products: Subject to compliance with requirements available products that may be incorporated into the Work include, but are not limited to, the following:

a. Cooper; TR8300.

b. Hubbell; HBL8300SGA.

c. Leviton; 8300-SGG.

d. Pass & Seymour; TR63H.

e. Or approved equal.

2. Description: Labeled shall comply with NFPA 70, "Health Care Facilities" Article, "Pediatric Locations" Section.

2.04 GFCI RECEPTACLES

A. General Description:

1. Straight blade, feed-through type.

2. Comply with NEMA WD 1, NEMA WD 6, UL 498, UL 943 Class A (including auto monitoring and end of life power denial requirements), and FS W-C-596.

3. Include indicator light that shows when the GFCI has malfunctioned and no longer provides proper GFCI protection.

B. Duplex GFCI Convenience Receptacles, 125 V, 20 A:

1. Products: Subject to compliance with requirements, available products that may be incorporated into the Work include, but are not limited to, the following:

a. Cooper; VGF20.

b. Hubbell; GFR5352L.

c. Pass & Seymour; 2095.

d. Or approved equal.

C. Tamper-Resistant GFCI Convenience Receptacles, 125 V, 20 A:

1. Products: Subject to compliance with requirements, available products that may be incorporated into the Work include, but are not limited to, the following:

a. Hubbell; GFTR20.

b. Pass & Seymour; 2095TR.

c. Or approved equal.

D. Hospital-Grade, Duplex GFCI Convenience Receptacles, 125 V, 20 A: Comply with NEMA WD 1, NEMA WD 6 Configuration 5-20R, UL 498 Supplement sd, and FS W-C-596.

1. Products: Subject to compliance with requirements available products that may be incorporated into the Work include, but are not limited to, the following:

a. Cooper; VGFH20.

b. Hubbell; HFR8300HL.

c. Leviton; 7899-HG.

d. Pass & Seymour; 2095HG.

e. Or approved equal.

2.05 TVSS RECEPTACLES

A. General Description: Comply with NEMA WD 1, NEMA WD 6, UL 498, UL 1449, and FS W-C-596, with integral TVSS in line to ground, line to neutral, and neutral to ground.

1. TVSS Components: Multiple metal-oxide varistors; with a nominal clamp-level rating of 400 V and minimum single transient pulse energy dissipation of 240 J, according to IEEE C62.41.2 and IEEE C62.45.

2. Active TVSS Indication: Visual with light visible in face of device to indicate device is "active" or "no longer in service."

B. Duplex TVSS Convenience Receptacles:

1. Products: Subject to compliance with requirements, available products that may be incorporated into the Work include, but are not limited to, the following:

a. Cooper; 5362BLS.

b. Hubbell; HBL5362SA.

c. Leviton; 5380.

d. Pass & Seymour; 5362BLSP.

e. Or approved equal.

2. Description: Straight blade, 125 V, 20 A; NEMA WD 6 Configuration 5-20R.

C. Isolated-Ground, Duplex TVSS Convenience Receptacles:

1. Products: Subject to compliance with requirements, available products that may be incorporated into the Work include, but are not limited to, the following:

a. Cooper; IG5362BLS.

b. Hubbell; IG5362SA.

c. Leviton; 5380-IG.

d. Pass & Seymour; IG5362BLSP.

e. Or approved equal.

2. Description:

a. Straight blade, 125 V, 20 A; NEMA WD 6 Configuration 5-20R.

b. Equipment grounding contacts shall be connected only to the green grounding screw terminal of the device and with inherent electrical isolation from mounting strap. Isolation shall be integral to receptacle construction and not dependent on removable parts.

D. Hospital-Grade, Duplex TVSS Convenience Receptacles: Comply with UL 498 Supplement sd.

1. Products: Subject to compliance with requirements, available products that may be incorporated into the Work include, but are not limited to, the following:

a. Cooper; 8300BLS.

b. Hubbell; HBL8362SA.

c. Leviton; 8380.

d. Pass & Seymour; 8300BLSP.

e. Or approved equal.

2. Description: Straight blade, 125 V, 20 A; NEMA WD 6 Configuration 5-20R.

3. Electrical Components, Devices, and Accessories: Listed and labeled as defined in NFPA 70, by a qualified testing agency, and marked for intended location and application.

4. Comply with NFPA 70.

E. Isolated-Ground, Hospital-Grade, Duplex TVSS Convenience Receptacles:

1. Products: Subject to compliance with requirements, available products that may be incorporated into the Work include, but are not limited to, the following:

a. Cooper; IG8300HGBLS.

b. Hubbell; IG8362SA.

c. Leviton; 8380-IG.

d. Pass & Seymour; IG8300BLSP.

e. Or approved equal.

2. Description:

a. Straight blade, 125 V, 20 A; NEMA WD 6 Configuration 5-20R.

b. Comply with UL 498 Supplement sd.

c. Equipment grounding contacts shall be connected only to the green grounding screw terminal of the device and with inherent electrical isolation from mounting strap. Isolation shall be integral to receptacle construction and not dependent on removable parts.

2.06 HAZARDOUS (CLASSIFIED) LOCATION RECEPTACLES

A. Wiring Devices for Hazardous (Classified) Locations: Comply with NEMA FB 11 and UL 1010.

1. Manufacturers: Subject to compliance with requirements, provide products by one of the following:

a. Cooper Crouse-Hinds.

b. EGS/Appleton Electric.

c. Killark; Division of Hubbell Inc.

d. Or approved equal.

2.07 TWIST-LOCKING RECEPTACLES

A. Single Convenience Twist-Lock Receptacles, 125 V, 20 A: Comply with NEMA WD 1, NEMA WD 6 Configuration L5-20R, and UL 498.

1. Cooper; CWL520R.

2. Hubbell; HBL2310.

3. Leviton; 2310.

4. Pass & Seymour; L520-R.

5. Or approved equal.

B. Isolated-Ground, Single Convenience Twist-Lock Receptacles, 125 V, 20 A:

1. Products: Subject to compliance with requirements, available products that may be incorporated into the Work include, but are not limited to, the following:

a. Cooper; IGL520R.

b. Hubbell; IG2310.

c. Leviton; 2310-IG.

d. Pass & Seymour; IG4700.

e. Or approved equal.

2. Description:

a. Comply with NEMA WD 1, NEMA WD 6 Configuration L5-20R, and UL 498.

b. Equipment grounding contacts shall be connected only to the green grounding screw terminal of the device and with inherent electrical isolation from mounting strap. Isolation shall be integral to receptacle construction and not dependent on removable parts.

2.08 COMBINATION RECEPTACLES/USB CHARGERS

A. General Description

1. Comply with NEMA WD 1, NEMA WD 6, configuration 515R, UL498 and FS W-C-596.

2. USB rated for 2A minimum at 5V (10VA) of charging power.

3. Shall fit in standard single gang box.

B. Straight blade duplex receptacle, 125V, 15A with two USB charging ports.

1. Products: Subject to compliance with requirements, available products that may be incorporated into the Work include, but are not limited to, the following:

a. Cooper; TR7745.

b. Hubbell; USB15x2.

c. Leviton; T5632

d. Newer Technology; Power2U.

e. Or approved equal.

C. Hospital-Grade duplex receptacle, 125V, 15A with two USB charging ports.

1. Products: Subject to compliance with requirements, available products that may be incorporated into the Work include, but are not limited to, the following:

a. Cooper; TR8245

b. Hubbell; USB8200

c. Leviton; T5632-HG

d. Or approved equal.

2.09 PENDANT CORD-CONNECTOR DEVICES

A. Description:

1. Matching, locking-type plug and receptacle body connector.

2. NEMA WD 6 Configurations L5-20P and L5-20R, heavy-duty grade, and FS W-C-596.

3. Body: Nylon, with screw-open, cable-gripping jaws and provision for attaching external cable grip.

4. External Cable Grip: Woven wire-mesh type made of high-strength, galvanized-steel wire strand, matched to cable diameter, and with attachment provision designed for corresponding connector.

2.10 CORD AND PLUG SETS

A. Description:

1. Match voltage and current ratings and number of conductors to requirements of equipment being connected.

2. Cord: Rubber-insulated, stranded-copper conductors, with Type SOW-A jacket; with green-insulated grounding conductor and ampacity of at least 130 percent of the equipment rating.

3. Plug: Nylon body and integral cable-clamping jaws. Match cord and receptacle type for connection.

2.11 DECORATOR-STYLE DEVICES

A. Convenience Receptacles: Square face, 125 V, 15 A; comply with NEMA WD 1, NEMA WD 6 Configuration 5-15R, and UL 498.

1. Products: Subject to compliance with requirements, available products that may be incorporated into the Work include, but are not limited to, the following:

a. Cooper; 6252.

b. Hubbell; DR15.

c. Leviton; 16252.

d. Pass & Seymour; 26252.

e. Or approved equal.

B. Tamper-Resistant Convenience Receptacles: Square face, 125 V, 15 A; comply with NEMA WD 1, NEMA WD 6 Configuration 5-15R, and UL 498.

1. Products: Subject to compliance with requirements, available products that may be incorporated into the Work include, but are not limited to, the following:

a. Cooper; TR6252.

b. Hubbell; DR15TR.

c. Pass & Seymour; TR26252.

d. Or approved equal.

2. Description: Labeled to comply with NFPA 70, "Receptacles, Cord Connectors, and Attachment Plugs (Caps)" Article, "Tamper-Resistant Receptacles in Dwelling Units" Section.

C. Tamper-Resistant and Weather-Resistant Convenience Receptacles: Square face, 125 V, 15 A; comply with NEMA WD 1, NEMA WD 6 Configuration 5-15R, and UL 498.

1. Products: Subject to compliance with requirements, available products that may be incorporated into the Work include, but are not limited to, the following:

a. Cooper; TWRBR15.

b. Hubbell; DR15TR.

c. LevitonTRW15.

d. Pass & Seymour; TRW26252.

e. Or approved equal.

2. Description: Labeled to comply with NFPA 70, "Receptacles, Cord Connectors, and Attachment Plugs (Caps)" Article, "Tamper-Resistant Receptacles in Dwelling Units" Section, when installed in wet and damp locations.

D. GFCI, Feed-Through Type, Convenience Receptacles: Square face, 125 V, 15 A; comply with NEMA WD 1, NEMA WD 6 Configuration 5-15R, UL 498, and UL 943 Class A.

1. Products: Subject to compliance with requirements, available products that may be incorporated into the Work include, but are not limited to, the following:

a. Cooper; VGF15.

b. Hubbell; GF15LA.

c. Leviton; 8599.

d. Pass & Seymour; 1594.

e. Or approved equal.

E. GFCI, Tamper-Resistant and Weather-Resistant Convenience Receptacles: Square face, 125 V, 15 A; comply with NEMA WD 1, NEMA WD 6 Configuration 5-15R, UL 498, and UL 943 Class A.

1. Products: Subject to compliance with requirements, available products that may be incorporated into the Work include, but are not limited to, the following:

a. Cooper; TWRVGF15.

b. Hubbell; GFTR15.

c. Pass & Seymour; 1594TRWR.

d. Or approved equal.

2. Description: Labeled to comply with NFPA 70, "Receptacles, Cord Connectors, and Attachment Plugs (Caps)" Article, "Tamper-Resistant Receptacles in Dwelling Units" Section.

2.12 WALL PLATES

A. Single and combination types shall match corresponding wiring devices.

1. Plate-Securing Screws: Metal with head color to match plate finish.

2. Material for Finished Spaces: Steel with white baked enamel, suitable for field painting.

3. Material for Unfinished Spaces: Galvanized steel

4. Material for Damp Locations: Thermoplastic with spring-loaded lift cover, and listed and labeled for use in wet and damp locations.

B. Wet-Location, Weatherproof Cover Plates: NEMA 250, complying with Type 3R, weather-resistant, die-cast aluminum thermoplastic with lockable cover.

2.13 FLOOR SERVICE FITTINGS

A. Type: Modular, flush-type, dual-service units suitable for wiring method used.

B. Compartments: Barrier separates power from voice and data communication cabling.

C. Service Plate: Rectangular die-cast aluminum with satin finish.

D. Power Receptacle: NEMA WD 6 Configuration 5-20R, gray finish, unless otherwise indicated.

E. Voice and Data Communication Outlet: Blank cover with bushed cable opening

F. Description:

1. Factory-fabricated and -wired assembly of below-floor junction box with multichanneled, through-floor raceway/firestop unit and detachable matching floor service-outlet assembly.

2. Comply with UL 514 scrub water exclusion requirements.

3. Service-Outlet Assembly: Pedestal type with services indicated

4. Size: Selected to fit nominal 3-inch cored holes in floor and matched to floor thickness.

5. Fire Rating: Unit is listed and labeled for fire rating of floor-ceiling assembly.

6. Closure Plug: Arranged to close unused 3-inch cored openings and reestablish fire rating of floor.

7. Wiring Raceways and Compartments: For a minimum of four No. 12 AWG conductors and a minimum of two, four-pair cables that comply with requirements.

2.14 PREFABRICATED MULTIOUTLET ASSEMBLIES

A. Manufacturers: Subject to compliance with requirements, available manufacturers offering products that may be incorporated into the Work include, but are not limited to, the following:

1. Hubbell Incorporated; Wiring Device-Kellems.

2. Wiremold/Legrand.

3. Or approved equal.

B. Description:

1. Two-piece surface metal raceway, with factory-wired multioutlet harness.

2. Components shall be products from single manufacturer designed for use as a complete, matching assembly of raceways and receptacles.

C. Raceway Material: Metal.

D. Multioutlet Harness:

1. Receptacles: 15-A, 125-V, NEMA WD 6 Configuration 5-15R receptacles complying with NEMA WD 1, UL 498, and FS W-C-596.

2. Receptacle Spacing: 6 inches.

3. Wiring: No. 12 AWG solid, Type THHN copper

2.15 SERVICE POLES

A. Description:

1. Factory-assembled and -wired units to extend power and voice and data communication from distribution wiring concealed in ceiling to devices or outlets in pole near floor.

2. Poles: Nominal 2.5-inch- square cross section, with height adequate to extend from floor to at least 6 inches above ceiling, and with separate channels for power wiring and voice and data communication cabling.

3. Mounting: Ceiling trim flange with concealed bracing arranged for positive connection to ceiling supports; with pole foot and carpet pad attachment.

4. Finishes: Manufacturer's standard painted finish and trim combination.

5. Wiring: Sized for minimum of five No. 12 AWG power and ground conductors and a minimum of four, four-pair, Category 3 or Category 5 voice and data communication cables.

6. Power Receptacles: Two duplex, 20-A, straight-blade receptacles complying with requirements in this Section.

7. Voice and Data Communication Outlets: Blank insert with bushed cable opening complying with requirements.

2.16 FINISHES

A. Device Color:

1. Wiring Devices Connected to Normal Power System: Almond unless otherwise indicated or required by NFPA 70 or device listing.

2. Wiring Devices Connected to Emergency Power System: Red

3. TVSS Devices: Blue.

4. Isolated-Ground Receptacles: Orange

B. Wall Plate Color: For plastic covers, match device color.

PART 3 - EXECUTION

3.01 INSTALLATION

A. Coordination with Other Trades:

1. Protect installed devices and their boxes. Do not place wall finish materials over device boxes and do not cut holes for boxes with routers that are guided by riding against outside of boxes.

2. Keep outlet boxes free of plaster, drywall joint compound, mortar, cement, concrete, dust, paint, and other material that may contaminate the raceway system, conductors, and cables.

3. Install device boxes in brick or block walls so that the cover plate does not cross a joint unless the joint is troweled flush with the face of the wall.

4. Install wiring devices after all wall preparation, including painting, is complete.

B. Conductors:

1. Do not strip insulation from conductors until right before they are spliced or terminated on devices.

2. Strip insulation evenly around the conductor using tools designed for the purpose. Avoid scoring or nicking of solid wire or cutting strands from stranded wire.

3. The length of free conductors at outlets for devices shall meet provisions of NFPA 70, Article 300, without pigtails.

4. Existing Conductors:

a. Cut back and pigtail, or replace all damaged conductors.

b. Straighten conductors that remain and remove corrosion and foreign matter.

c. Pigtailing existing conductors is permitted, provided the outlet box is large enough.

C. Device Installation:

1. Replace devices that have been in temporary use during construction and that were installed before building finishing operations were complete.

2. Keep each wiring device in its package or otherwise protected until it is time to connect conductors.

3. Do not remove surface protection, such as plastic film and smudge covers, until the last possible moment.

4. Connect devices to branch circuits using pigtails that are not less than 6 inches in length.

5. When there is a choice, use side wiring with binding-head screw terminals. Wrap solid conductor tightly clockwise, two-thirds to three-fourths of the way around terminal screw.

6. Use a torque screwdriver when a torque is recommended or required by manufacturer.

7. When conductors larger than No. 12 AWG are installed on 15- or 20-A circuits, splice No. 12 AWG pigtails for device connections.

8. Tighten unused terminal screws on the device.

9. When mounting into metal boxes, remove the fiber or plastic washers used to hold device-mounting screws in yokes, allowing metal-to-metal contact.

D. Receptacle Orientation:

1. Install ground pin of vertically mounted receptacles up, and on horizontally mounted receptacles to the right.

2. Install hospital-grade receptacles in patient-care areas with the ground pin or neutral blade at the top.

E. Device Plates: Do not use oversized or extra-deep plates. Repair wall finishes and remount outlet boxes when standard device plates do not fit flush or do not cover rough wall opening.

F. Arrangement of Devices: Unless otherwise indicated, mount flush, with long dimension vertical and with grounding terminal of receptacles on top.

G. Adjust locations of floor service outlets and service poles to suit arrangement of partitions and furnishings.

3.02 RECEPTACLES

A. Hospital Grade: Provide hospital grade receptacles in all patient care areas, operating rooms, patient corridors, work rooms, equipment rooms, utility rooms, patient preparation rooms, exam rooms and nurses' stations. Provide 15 amp receptacles in all locations except provide 20 amp receptacles on dedicated 20 amp circuits.

B. Provide surge protection receptacles in the locations shown on the drawings.

C. Provide isolated ground receptacles in the locations shown on the drawings.

D. Provide exterior GFCI receptacle within 25'-0" of each roof mounted mechanical equipment, for all outdoor receptacles, and other locations shown on the drawings.

E. Provide tamper resistant receptacles in pediatric care areas, alcoholism and substance abuse treatment areas, exam rooms, and waiting areas.

3.03 GFCI RECEPTACLES

A. Install non-feed-through-type GFCI receptacles where protection of downstream receptacles is not required.

3.04 IDENTIFICATION

A. Comply with Section 26 05 53 "Identification for Electrical Systems."

B. Identify each receptacle with panelboard identification and circuit number. Use hot, stamped, or engraved machine printing with black-filled lettering on face of plate, and durable wire markers or tags inside outlet boxes.

1. Engrave emergency receptacle device plates with "EMERGENCY" above the receptacle with the panelboard and circuit number supplying them engraved below the receptacle. Engraving shall be approximately 3/16" high, red filled characters.

2. Engrave normal receptacle cover-plates in Critical Care Areas as defined in the NEC, with the circuit number supplying them below the receptacle with 3/16" high, black filled letters.

3. For all receptacles other than 15 and 20 amp, 120 volts, engrave cover-plate or provide separate nameplate with ampere rating, voltage and phase.

4. The electrical contractor shall be responsible to have faceplates on all owner furnished equipment and equipment furnished under other divisions engraved with circuit number, and "EMERGENCY" (where applies) as specified in this section. This includes but is not limited to: headwalls, gas columns and booms, patient consoles, medical rail systems, custom casework with electrical devices, etc.

5. For receptacles other than 15 and 20 amp, 120 volts, engrave cover-plate or provide separate nameplate with ampere rating, voltage and phase. Minimum lettering size 3/16".

3.05 ENGRAVING

A. Engrave cover-plates on all owner furnished equipment and equipment furnished under other divisions with circuit number, panelboard and “emergency” (where applies) as specified in this section. This includes but is not limited to: headwalls, gas columns and booms, patient consoles, medical rail systems, custom casework with electrical devices, etc.

3.06 CLEANING

A. Remove excess plaster from interior of outlet boxes.

B. Clean devices and cover-plates after painting is complete. Replace stained or improperly painted devices or cover-plates.

3.07 CORD AND PLUG SETS

A. Provide for all cord connected equipment furnished by the Owner or specified in other sections when equipment is not supplied with an integral cord and plug set.

B. For equipment other than 120 volts, 1Æ, replace plug furnished with equipment to match receptacle actually installed (within ampacity rating of equipment).

3.08 FIELD QUALITY CONTROL

A. Perform the following tests and inspections with the assistance of a factory-authorized service representative:

1. In healthcare facilities, prepare reports that comply with recommendations in NFPA 99.

2. Test Instruments: Use instruments that comply with UL 1436.

3. Test Instrument for Convenience Receptacles: Digital wiring analyzer with digital readout or illuminated digital-display indicators of measurement.

B. Tests for Convenience Receptacles:

1. Line Voltage: Acceptable range is 105 to 132 V.

2. Percent Voltage Drop under 15-A Load: A value of 6 percent or higher is unacceptable.

3. Ground Impedance: Values of up to 2 ohms are acceptable.

4. GFCI Trip: Test for tripping values specified in UL 1436 and UL 943.

5. Receptacle Polarity Test: Test every receptacle installed or reconnected under this contract with a receptacle circuit tester. Tester shall test for open ground, reverse polarity, open hot, open neutral, hot and ground reversed, hot or neutral and hot open. Rewire receptacles with faults and retest. Submit statement of completed testing signed by the electrician that performed the test.

6. Ground-Fault Receptacle Circuit Interrupter Tests: Test each receptacle or branch circuit breaker having ground-fault circuit protection to assure that the ground-fault circuit interrupter will not operate when subjected to a ground-fault current of less than 4 milliamperes and will operate when subjected to a ground-fault current exceeding 6 milliamperes. Perform testing using an instrument specifically designed and manufactured for testing ground-fault circuit interrupters. Apply the test to the receptacle. "TEST" button operation will not be acceptable as a substitute for this test. Replace receptacles that do not shutoff power with 7/1000 of an ampere within 1/40th of a second and retest.

7. Using the test plug, verify that the device and its outlet box are securely mounted.

8. Tests shall be diagnostic, indicating damaged conductors, high resistance at the circuit breaker, poor connections, inadequate fault current path, defective devices, or similar problems. Correct circuit conditions, remove malfunctioning units and replace with new ones, and retest as specified above.

C. Test straight-blade for the retention force of the grounding blade according to NFPA 99. Retention force shall be not less than 4 oz..

D. Wiring device will be considered defective if it does not pass tests and inspections.

E. Prepare test and inspection reports.

END OF SECTION

SECTION 26 28 13

FUSES

PART 1 - GENERAL

1.01 RELATED DOCUMENTS

A. Drawings and general provisions of the Contract, including General and Supplementary Conditions and Division 01 Specification Sections, apply to this Section.

1.02 SUMMARY

A. Section Includes:

1. Cartridge fuses rated 600-V ac and less.

2. Spare-fuse cabinets.

1.03 REFERENCES

A. American National Standards Institute (ANSI)

B. National Electrical Manufacturers Association (NEMA)

C. Underwriters Laboratories (UL)

1.04 ACTION SUBMITTALS

A. Product Data: For each type of product indicated. Include construction details, material, dimensions, descriptions of individual components, and finishes for spare-fuse cabinets. Include the following for each fuse type indicated:

1. Dimensions and manufacturer's technical data on features, performance, electrical characteristics, and ratings.

2. Current-limitation curves for fuses with current-limiting characteristics.

3. Time-current coordination curves (average melt) and current-limitation curves (instantaneous peak let-through current) for each type and rating of fuse

4. Coordination charts and tables and related data.

1.05 CLOSEOUT SUBMITTALS

A. Operation and Maintenance Data: For fuses to include in emergency, operation, and maintenance manuals. In addition to items specified in Division 01 Section "Operation and Maintenance Data," include the following:

1. Ambient temperature adjustment information.

2. Current-limitation curves for fuses with current-limiting characteristics.

3. Time-current coordination curves (average melt) and current-limitation curves (instantaneous peak let-through current) for each type and rating of fuse

4. Coordination charts and tables and related data.

1.06 MAINTENANCE MATERIAL SUBMITTALS

A. Furnish extra materials that match products installed and that are packaged with protective covering for storage and identified with labels describing contents.

1. Fuses: Equal to **10** percent of quantity installed for each size and type, but no fewer than three of each size and type.

1.07 QUALITY ASSURANCE

A. Source Limitations: Obtain fuses, for use within a specific product or circuit, from single source from single manufacturer.

B. Electrical Components, Devices, and Accessories: Listed and labeled as defined in NFPA 70, by a qualified testing agency, and marked for intended location and application.

C. Comply with NEMA FU 1 for cartridge fuses.

D. Comply with UL 248-11 for plug fuses.

1.08 PROJECT CONDITIONS

A. Where ambient temperature to which fuses are directly exposed is less than 40 deg F or more than 100 deg F, apply manufacturer's ambient temperature adjustment factors to fuse ratings.

1.09 COORDINATION

A. Coordinate fuse ratings with utilization equipment nameplate limitations of maximum fuse size and with system short-circuit current levels.

PART 2 - PRODUCTS

2.01 MANUFACTURERS

A. Manufacturers: Subject to compliance with requirements, provide products by one of the following:

1. Eaton, Inc.
2. Edison Fuse, Inc.
3. Ferraz Shawmut, Inc.
4. Littelfuse, Inc.
5. Or approved equal.

2.02 CARTRIDGE FUSES

A. Characteristics: NEMA FU 1, nonrenewable cartridge fuse; class as specified or indicated; current rating as indicated; voltage rating consistent with circuit voltage.

B. Current limiting, 200,000 AIC minimum interrupting capacity, unless noted otherwise.

C. Circuits 601-6000 amps: Class L

D. Circuits 600 amps and less: Class RK1 or Class J

E. Motor Circuits: Class RK5 dual element time delay or Class L (601-6000A)

F. Transformer Primary Circuits: Class RK5

2.03 SPARE FUSE CABINET

A. Wall-mounted 0.05-inch-(1.27-mm-) thick steel unit with full-length, recessed piano-hinged door key-coded cam lock and pull. Cabinet front and lock to match panelboard equipment specified in Section 26 24 16 - Panelboards.

1. Size: Adequate for orderly storage of spare fuses specified with 10 percent spare capacity minimum.

2. Finish: Gray baked enamel.

3. Identification: "SPARE FUSES" in 1-1/2-inch- high letters on exterior of door.

4. Fuse Pullers: For each size of fuse.

PART 3 - EXECUTION

3.01 EXAMINATION

A. Examine utilization equipment nameplates and installation instructions to verify proper fuse locations, sizes, and characteristics.

B. Examine fuses before installation. Reject fuses that are moisture damaged or physically damaged.

C. Examine holders to receive fuses for compliance with installation tolerances and other conditions affecting performance, such as rejection features.

D. Examine utilization equipment nameplates and installation instructions. Install fuses of sizes and with characteristics appropriate for each piece of equipment.

E. Evaluate ambient temperatures to determine if fuse rating adjustment factors must be applied to fuse ratings.

F. Proceed with installation only after unsatisfactory conditions have been corrected.

3.02 INSTALLATION

A. Install fuses in fusible devices at job site just prior to energization. Do not accept equipment with fuses installed at factory.

B. Arrange fuses so rating information is readable without removing fuse.

C. Install spare fuse cabinet in main electrical room or as shown on drawings.

3.03 CLEANING AND INSPECTION

A. Clean fuses, tighten connections and inspect fuse holders prior to energization of the equipment.

3.04 IDENTIFICATION

A. Install labels complying with requirements for identification specified in Division 26 Section "Identification for Electrical Systems" and indicating fuse replacement information on inside door of each fused switch and adjacent to each fuse block, socket, and holder.

END OF SECTION

SECTION 26 28 16

ENCLOSED SWITCHES AND CIRCUIT BREAKERS

PART 1 - GENERAL

1.01 RELATED DOCUMENTS

A. Drawings and general provisions of the Contract, including General and Supplementary Conditions and other Division 01 Specification Sections, apply to this Section.

1.02 SUMMARY

A. Section Includes:

1. Fusible switches.
2. Nonfusible switches.
3. Receptacle switches.
4. Shunt trip switches.
5. Molded-case circuit breakers (MCCBs).
6. Molded-case switches.
7. Enclosures.

B. Provide all disconnects required by code for equipment furnished under this and other Divisions of these specifications unless disconnects are integral with equipment and acceptable to the authority having jurisdiction.

1.03 REFERENCES

A. National Electrical Manufacturers Association (NEMA)

B. Underwriters Laboratories (UL)

1.04 DEFINITIONS

A. NC: Normally closed.

B. NO: Normally open.

C. SPDT: Single pole, double throw.

1.05 PERFORMANCE REQUIREMENTS

A. Seismic Performance: Enclosed switches and circuit breakers shall withstand the effects of earthquake motions determined according to ASCE/SEI 7.

1. The term "withstand" means "the unit will remain in place without separation of any parts from the device when subjected to the seismic forces specified and the unit will be fully operational after the seismic event."

1.06 ACTION SUBMITTALS

A. Product Data: For each type of enclosed switch, circuit breaker, accessory, and component indicated. Include dimensioned elevations, sections, weights, and manufacturers' technical data on features, performance, electrical characteristics, ratings, accessories, and finishes.

1. Enclosure types and details for types other than NEMA 250, Type 1.

2. Current and voltage ratings.

3. Short-circuit current ratings (interrupting and withstand, as appropriate).

4. Include evidence of NRTL listing for series rating of installed devices.

5. Detail features, characteristics, ratings, and factory settings of individual overcurrent protective devices, accessories, and auxiliary components.

6. Include time-current coordination curves (average melt) for each type and rating of overcurrent protective device; include selectable ranges for each type of overcurrent protective device.

B. Shop Drawings: For enclosed switches and circuit breakers. Include plans, elevations, sections, details, and attachments to other work.

1. Wiring Diagrams: For power, signal, and control wiring.

1.07 INFORMATIONAL SUBMITTALS

A. Qualification Data: For qualified testing agency.

B. Seismic Qualification Certificates: For enclosed switches and circuit breakers, accessories, and components, from manufacturer.

1. Basis for Certification: Indicate whether withstand certification is based on actual test of assembled components or on calculation.

2. Dimensioned Outline Drawings of Equipment Unit: Identify center of gravity and locate and describe mounting and anchorage provisions.

3. Detailed description of equipment anchorage devices on which the certification is based and their installation requirements.

C. Field quality-control reports.

1. Test procedures used.

2. Test results that comply with requirements.

3. Results of failed tests and corrective action taken to achieve test results that comply with requirements.

D. Manufacturer's field service report.

1.08 CLOSEOUT SUBMITTALS

A. Operation and Maintenance Data: For enclosed switches and circuit breakers to include in emergency, operation, and maintenance manuals. In addition to items specified in Division 01 Section "Operation and Maintenance Data," include the following:

1. Manufacturer's written instructions for testing and adjusting enclosed switches and circuit breakers.

2. Time-current coordination curves (average melt) for each type and rating of overcurrent protective device; include selectable ranges for each type of overcurrent protective device.

1.09 MAINTENANCE MATERIAL SUBMITTALS

A. Furnish extra materials that match products installed and that are packaged with protective covering for storage and identified with labels describing contents.

1. Fuses: Equal to 10 percent of quantity installed for each size and type, but no fewer than three of each size and type.

2. Fuse Pullers: Two for each size and type.

1.10 QUALITY ASSURANCE

A. Source Limitations: Obtain enclosed switches and circuit breakers, overcurrent protective devices, components, and accessories, within same product category, from single source from single manufacturer.

B. Product Selection for Restricted Space: Drawings indicate maximum dimensions for enclosed switches and circuit breakers, including clearances between enclosures, and adjacent surfaces and other items. Comply with indicated maximum dimensions.

C. Electrical Components, Devices, and Accessories: Listed and labeled as defined in NFPA 70, by a qualified testing agency, and marked for intended location and application.

D. Comply with NFPA 70.

1.11 PROJECT CONDITIONS

A. Environmental Limitations: Rate equipment for continuous operation under the following conditions unless otherwise indicated:

1. Ambient Temperature: Not less than minus 22 deg F and not exceeding 104 deg F.

2. Altitude: Not exceeding 6600 feet.

1.12 COORDINATION

A. Coordinate layout and installation of switches, circuit breakers, and components with equipment served and adjacent surfaces. Maintain required workspace clearances and required clearances for equipment access doors and panels.

PART 2 - PRODUCTS

2.01 MANUFACTURERS

A. Manufacturers: Subject to compliance with requirements, provide products by one of the following:

1. Eaton Electrical Inc

2. General Electric Company.

3. Siemens Energy & Automation, Inc.

4. Schneider Electric.

5. Or approved equal.

2.02 RATINGS

A. Voltage: Meet or exceed voltage of the circuit the switch or circuit breaker is applied to.

B. Current

1. Continuous current rating shall be either of the following:

a. As indicated on the drawings.

b. If not indicated, match or exceed the continuous current rating of the overcurrent protective device that protects the conductor providing incoming power to the switch or circuit breaker.

2. Short circuit withstand and interrupting ratings

a. Shall comply with either of the following:

1) If the available short circuit current at the switch or circuit breaker is indicated on the drawings, exceed the indicated value while allowing for appropriate X/R derating.
2) Meet or exceed the AIC rating of the overcurrent protective device that protects the conductor providing incoming power to the switch or circuit breaker.

b. Compliance: Short circuit withstand and interrupting ratings shall be complied with using any of the following methods:

1) Listed short circuit ratings complying with above criteria.

2) Independent testing laboratory recognized series connected ratings complying with the above criteria.

3) Oversizing the indicated switch or circuit breaker rated current to obtain a listed short circuit withstand and interrupting rating complying with the above criteria, if the appropriate amount of space is available at the indicated location.

4) If a nonfusible disconnect is indicated it may be changed to a fusible disconnect to obtain the required listed short circuit current withstand rating.

3. Overcurrent Protection

a. Provide overcurrent protection matching the ampacity indicated on the drawings.

b. When included as part of the disconnecting means for utilization equipment the overcurrent protection shall comply with the listing requirements of the utilization equipment. Obtain utilization equipment shop drawings as specified in the appropriate specification division to determine requirements.

C. Poles: Match the circuit the switch or circuit breaker is applied to.

2.03 FUSIBLE SWITCHES

A. Type GD, General Duty, Single Throw, 100 A and Smaller: UL 98 and NEMA KS 1, horsepower rated, with cartridge fuse interiors, lockable handle with capability to accept two padlocks, and interlocked with cover in closed position.

B. Type HD, Heavy Duty, Single Throw, Larger than 100 amp: UL 98 and NEMA KS 1, horsepower rated, with clips or bolt pads to accommodate fuses, lockable handle with capability to accept three padlocks, and interlocked with cover in closed position.

C. Accessories:

1. Class R Fuse Kit: Provides rejection of other fuse types when Class R fuses are specified.

2.04 NONFUSIBLE SWITCHES

A. Type GD, General Duty, Single Throw, 100 A and Smaller: UL 98 and NEMA KS 1, horsepower rated, lockable handle with capability to accept two padlocks, and interlocked with cover in closed position.

B. Type HD, Heavy Duty, Single Throw, Larger than 100 amp. UL 98 and NEMA KS 1, horsepower rated, lockable handle with capability to accept three padlocks, and interlocked with cover in closed position.

C. Type HD, Heavy Duty, Double Throw, 1200 A and Smaller: UL 98 and NEMA KS 1, horsepower rated, lockable handle with capability to accept three padlocks, and interlocked with cover in closed position.

2.05 RECEPTACLE SWITCHES

A. Type HD, Heavy-Duty, Single-Throw Fusible Switch; UL 98 and NEMA KS 1; horsepower rated, with clips or bolt pads to accommodate indicated fuses; lockable handle with capability to accept three padlocks; interlocked with cover in closed position.

B. Type HD, Heavy-Duty, Single-Throw Nonfusible Switch; UL 98 and NEMA KS 1; horsepower rated, lockable handle with capability to accept three padlocks; interlocked with cover in closed position.

C. Interlocking Linkage: Provided between the receptacle and switch mechanism to prevent inserting or removing plug while switch is in the on position, inserting any plug other than specified, and turning switch on if an incorrect plug is inserted or correct plug has not been fully inserted into the receptacle.

D. Receptacle: Polarized, three-phase, four-wire receptacle (fourth wire connected to enclosure ground lug).

2.06 ELEVATOR FUSED SHUNT TRIP SWITCH

A. General Requirements: Comply with ASME A17.1, UL 50, and UL 98, with 200-kA interrupting and short-circuit current rating when fitted with Class J fuses.

B. Switches: Three-pole, horsepower rated, with integral shunt trip mechanism and Class J fuse block; lockable handle with capability to accept three padlocks; interlocked with cover in closed position. Ampere rating of the switch shall be based upon the elevator manufacturer requirements.

C. Provide shunt-trip fused disconnect switch with relay(s), control transformer and other options.

1. Short-circuit current rating of 200,000 A.

2. Interlocks to prevent the opening of the cover when the switch is in the ON position.

3. 100 VA control power transformer with primary and secondary fuses.

4. Handle lockable in OFF position.

5. Isolation relay (3PDT, 10 amp, 120V) The coil of the isolation relay shall be 120V. A normally open dry contact shall be provided by the fire alarm safety system to energize the isolation relay and activate the shunt trip solenoid (140V inrush at 120 V). (Note: if 24V DC coil is selected, a separate 24V DC source and contact must be provided by the Fire Alarm Safety System.)

6. Provide additional options as indicated on drawings or below:

   a. Key to test switch

   b. 'On' Pilot light (Green, Red or White)

   c. Isolated full capacity neutral bus and ground bus.

   d. 1P NC mechanical interlock (required for hydraulic elevator with automatic recall)

2.07 MOLDED-CASE CIRCUIT BREAKERS

A. General Requirements: Comply with UL 489, NEMA AB 1, and NEMA AB 3, with interrupting capacity to comply with available fault currents.

B. Thermal-Magnetic Circuit Breakers: Inverse time-current element for low-level overloads and instantaneous magnetic trip element for short circuits. Adjustable magnetic trip setting for circuit-breaker frame sizes 250 A and larger.

C. Molded Case Switch: When serving only as a disconnecting means.

D. Frame sizes 400 amp and larger: Electronic Trip Circuit Breakers: rms sensing, with the following field-adjustable settings:

   1. Instantaneous trip.

   2. Long- and short-time pickup levels.

   3. Long- and short-time time adjustments.

E. Current-Limiting Circuit Breakers: Frame sizes 400 A and smaller, and let-through ratings less than NEMA FU 1, RK-5.

2.08 ACCESSORIES

A. Lugs: Mechanical type, suitable for number, size, trip ratings, and conductor material.

B. Equipment Ground Kit: Internally mounted and labeled for copper and aluminum ground conductors.

C. Neutral Kit: Required where neutral conductor is indicated on the drawings. Internally mounted; insulated, capable of being grounded and bonded; labeled for copper and aluminum neutral conductors.

D. Additional accessories, where indicated

1. Ground-Fault Protection: Comply with UL 1053; remote-mounted and powered type with mechanical ground-fault indicator; relay with adjustable pickup and time-delay settings, push-to-test feature, internal memory, and shunt trip unit; and three-phase, zero-sequence current transformer/sensor.

2. Shunt Trip: Trip coil energized from separate circuit, with coil-clearing contact.

3. Auxiliary Contacts: One SPDT switch with "a" and "b" contacts; "a" contacts mimic switch contacts, "b" contacts operate in reverse of switch contacts.

4. Alarm Switch: One SPDT contact that operates only when switch has tripped.

2.09 ENCLOSURES

A. Enclosed Switches and Circuit Breakers: NEMA AB 1, NEMA KS 1, NEMA 250, and UL 50, to comply with environmental conditions at installed location.

1. Indoor, Dry and Clean Locations: NEMA 250, Type 1.

2. Outdoor Locations: NEMA 250, Type 3R.

3. Kitchen, Wash-Down Areas: NEMA 250, Type 4X, stainless steel.

4. Other Wet or Damp, Indoor Locations: NEMA 250, Type 4.

5. Indoor Locations Subject to Dust, Falling Dirt, and Dripping Noncorrosive Liquids: NEMA 250, Type 12.

2.10 NAMEPLATES

A. Provide nameplates per Section 26 05 53 - Identification For Electrical Systems.

B. Provide permanently attached nameplates (with mechanical fasteners) constructed of plastic (black on white) laminated material engraved through black surface material to white sublayer. Exception: Emergency distribution system component labeling - white letters on red background.

C. Include the following information: Load name, voltage and phase and fuse size and type (when applicable).

PART 3 - EXECUTION

3.01 EXAMINATION

A. Examine elements and surfaces to receive enclosed switches and circuit breakers for compliance with installation tolerances and other conditions affecting performance of the Work.

B. Proceed with installation only after unsatisfactory conditions have been corrected.

3.02 INSTALLATION

A. Install individual wall-mounted switches and circuit breakers level and plumb according to manufacturer's written instructions.

B. Comply with mounting and anchoring requirements specified in Division 26 Section "Vibration and Seismic Controls for Electrical Systems."

C. Securely mount adjacent to equipment on wall or acceptable mounting frame. Disconnect switches shall be mounted independent from the equipment they serve. Disconnects supported only by raceway are not acceptable.

D. Wiring space within Disconnects, Fused Switches or Enclosed Circuit Breakers shall not be used for splices.

E. Tighten electrical connectors and terminals according to manufacturer's published torque-tightening values. Where manufacturer's torque values are not indicated, use those specified in UL 486A and UL 486B.

F. Temporary Lifting Provisions: Remove temporary lifting eyes, channels, and brackets and temporary blocking of moving parts from enclosures and components.

G. Install fuses in fusible devices.

H. Comply with NECA 1.

3.03 CLEANING

A. After completing system installation, including outlet fittings and devices, inspect exposed finish. Remove burrs, dirt, and construction debris and repair damaged finish including chips, scratches, and abrasions.

3.04 IDENTIFICATION

A. Comply with requirements in Division 26 Section "Identification for Electrical Systems."

1. Identify field-installed conductors, interconnecting wiring, and components; provide warning signs.

2. Label each enclosure with engraved metal or laminated-plastic nameplate.

3.05 FIELD QUALITY CONTROL

A. Acceptance Testing Preparation:

1. Test insulation resistance for each enclosed switch and circuit breaker, component, connecting supply, feeder, and control circuit.

2. Test continuity of each circuit.

B. Tests and Inspections:

1. Perform each visual and mechanical inspection and electrical test stated in NETA Acceptance Testing Specification. Certify compliance with test parameters.

2. Correct malfunctioning units on-site, where possible, and retest to demonstrate compliance; otherwise, replace with new units and retest.

3. Perform the following infrared scan tests and inspections and prepare reports:

a. Initial Infrared Scanning: After Substantial Completion, but not more than 60 days after Final Acceptance, perform an infrared scan of each enclosed switch and circuit breaker. Remove front panels so joints and connections are accessible to portable scanner.

b. Follow-up Infrared Scanning: Perform an additional follow-up infrared scan of each enclosed switch and circuit breaker 11 months after date of Substantial Completion.

c. Instruments and Equipment: Use an infrared scanning device designed to measure temperature or to detect significant deviations from normal values. Provide calibration record for device.

4. Test and adjust controls, remote monitoring, and safeties. Replace damaged and malfunctioning controls and equipment.

C. Enclosed switches and circuit breakers will be considered defective if they do not pass tests and inspections.

D. Prepare test and inspection reports, including a certified report that identifies enclosed switches and circuit breakers and that describes scanning results. Include notation of deficiencies detected, remedial action taken, and observations after remedial action.

3.06 ADJUSTING

A. Adjust moving parts and operable components to function smoothly, and lubricate as recommended by manufacturer.

B. Set field-adjustable circuit-breaker trip ranges as directed.

END OF SECTION

SECTION 26 29 13

ENCLOSED CONTROLLERS

PART 1 - GENERAL

1.01 RELATED DOCUMENTS

A. Drawings and general provisions of the Contract, including General and Supplementary Conditions and Division 01 Specification Sections, apply to this Section.

1.02 SUMMARY

A. Section includes the following enclosed controllers rated 600 V and less:

1. Full-voltage manual.
2. Full-voltage magnetic.
3. Reduced-voltage magnetic.
4. Reduced-voltage solid state.
5. Multispeed.

B. Related Section:

1. Section 26 05 48 "Variable-Frequency Motor Controllers" for general-purpose, ac, adjustable-frequency, pulse-width-modulated controllers for use on variable torque loads in ranges up to 200 hp.

C. The Contractor performing the Division 26 work shall furnish motor controllers for all motors shown unless the controllers are included with the equipment furnished under other divisions of these specifications. The contractor performing the Division 26 work shall install all motor controllers including all controllers not factory assembled into equipment furnished under other divisions of these specifications or by Owner. All motors and motor controllers shall be complete and fully operational upon completion of the project.

1.03 DEFINITIONS

A. CPT: Control power transformer.

B. MCCB: Molded-case circuit breaker.

C. MCP: Motor circuit protector.

D. N.C.: Normally closed.

E. N.O.: Normally open.

F. OCPD: Overcurrent protective device.

G. SCR: Silicon-controlled rectifier.

H. VFC: Variable Frequency Controller

1.04 MOTOR VOLTAGE INFORMATION

A. Voltages available are 208 and 480 volt three phase; or 120, 208 and 277 volt single phase. Circuits are designed (in general) for motors with voltage ratings as follows:

1. Smaller than 1/2 HP - 115 volts, single phase.

2. 1/2 HP and larger - 200 or 460 volts, three phase.

B. Obtain submittals and shop drawings and verify motor sizes and voltages provided under other Divisions prior to commencing work.

1.05 PERFORMANCE REQUIREMENTS

A. Seismic Performance: Enclosed controllers shall withstand the effects of earthquake motions determined according to ASCE/SEI 7.

1. The term "withstand" means "the unit will remain in place without separation of any parts from the device when subjected to the seismic forces specified and the unit will be fully operational after the seismic event."

1.06 ACTION SUBMITTALS

A. Product Data: For each type of enclosed controller. Include manufacturer's technical data on features, performance, electrical characteristics, ratings, and enclosure types and finishes.

B. Shop Drawings: For each enclosed controller. Include dimensioned plans, elevations, sections, details, and required clearances and service spaces around controller enclosures.

1. Show tabulations of the following:

    a. Each installed unit's type and details.

    b. Factory-installed devices.

    c. Nameplate legends.

    d. Short-circuit current rating of integrated unit.

    e. Listed and labeled for integrated short-circuit current (withstand) rating of OCPDs in combination controllers by an NRTL acceptable to authorities having jurisdiction.

    f. Features, characteristics, ratings, and factory settings of individual OCPDs in combination controllers.

2. Wiring Diagrams: For power, signal, and control wiring.

1.07 INFORMATIONAL SUBMITTALS

A. Qualification Data: For qualified testing agency.

B. Seismic Qualification Certificates: For enclosed controllers, accessories, and components, from manufacturer.

1. Basis for Certification: Indicate whether withstand certification is based on actual test of assembled components or on calculation.

2. Dimensioned Outline Drawings of Equipment Unit: Identify center of gravity and locate and describe mounting and anchorage provisions.

3. Detailed description of equipment anchorage devices on which the certification is based and their installation requirements.

C. Field quality-control reports.

D. Load-Current and Overload-Relay Heater List: Compile after motors have been installed, and arrange to demonstrate that selection of heaters suits actual motor nameplate full-load currents.

E. Load-Current and List of Settings of Adjustable Overload Relays: Compile after motors have been installed, and arrange to demonstrate that switch settings for motor running overload protection suit actual motors to be protected.

1.08 CLOSEOUT SUBMITTALS

A. Operation and Maintenance Data: For enclosed controllers to include in emergency, operation, and maintenance manuals. In addition to items specified in Division 01 Section "Operation and Maintenance Data," include the following:

1. Routine maintenance requirements for enclosed controllers and installed components.

2. Manufacturer's written instructions for testing and adjusting circuit breaker and MCP trip settings.

3. Manufacturer's written instructions for setting field-adjustable overload relays.

4. Manufacturer's written instructions for testing, adjusting, and reprogramming reduced-voltage solid-state controllers.

1.09 MATERIALS MAINTENANCE SUBMITTALS

A. Furnish extra materials that match products installed and that are packaged with protective covering for storage and identified with labels describing contents.

1. Fuses for Fused Switches: Equal to 10 percent of quantity installed for each size and type, but no fewer than three of each size and type.

2. Control Power Fuses: Equal to 10 percent of quantity installed for each size and type, but no fewer than two of each size and type.

3. Indicating Lights: Two of each type and color installed.

4. Auxiliary Contacts: Furnish one spare(s) for each size and type of magnetic controller installed.

5. Power Contacts: Furnish three spares for each size and type of magnetic contactor installed.

1.10 QUALITY ASSURANCE

A. Testing Agency Qualifications: Member company of NETA or an NRTL.

B. Testing Agency's Field Supervisor Qualifications: Currently certified by NETA to supervise on-site testing.

C. Electrical Components, Devices, and Accessories: Listed and labeled as defined in NFPA 70, by a qualified testing agency, and marked for intended location and application.

D. Comply with NFPA 70.

E. IEEE Compliance: Fabricate and test enclosed controllers according to IEEE 344 to withstand seismic forces defined in Division 26 Section "Vibration and Seismic Controls for Electrical Systems."

1.11 DELIVERY, STORAGE, AND HANDLING

A. Store enclosed controllers indoors in clean, dry space with uniform temperature to prevent condensation. Protect enclosed controllers from exposure to dirt, fumes, water, corrosive substances, and physical damage.

B. If stored in areas subject to weather, cover enclosed controllers to protect them from weather, dirt, dust, corrosive substances, and physical damage. Remove loose packing and flammable materials from inside controllers.

1.12 PROJECT CONDITIONS

A. Environmental Limitations: Rate equipment for continuous operation under the following conditions unless otherwise indicated:

1. Ambient Temperature: Not less than minus 22 deg F and not exceeding 104 deg F.

2. Altitude: Not exceeding 6600 feet.

1.13 COORDINATION

A. Coordinate layout and installation of enclosed controllers with other construction including conduit, piping, equipment, and adjacent surfaces. Maintain required workspace clearances and required clearances for equipment access doors and panels.

B. Coordinate sizes and locations of concrete bases with actual equipment provided. Cast anchor-bolt inserts into bases.

C. Coordinate installation of roof curbs, equipment supports, and roof penetrations.

PART 2 - PRODUCTS

2.01 MANUFACTURERS

A. Manufacturers: Subject to compliance with requirements, provide products by one of the following:

B. Basis-of-Design Product: Subject to compliance with requirements, provide comparable product by one of the following:

1. Eaton Electrical Inc.; Cutler-Hammer Business Unit.

2. General Electric Company; GE Consumer & Industrial - Electrical Distribution.

3. Rockwell Automation, Inc.; Allen-Bradley brand.

4. Siemens Energy & Automation, Inc.

5. Square D; a brand of Schneider Electric.

6. Or approved equal.

2.02 FULL-VOLTAGE CONTROLLERS

A. General Requirements for Full-Voltage Controllers: Comply with NEMA ICS 2, general purpose, Class A.

B. Motor-Starting Switches: "Quick-make, quick-break" toggle or push-button action; marked to show whether unit is off or on.

1. Configuration: Nonreversing

2. Flush mounting.

3. Red pilot light.

C. Fractional Horsepower Manual Controllers: "Quick-make, quick-break" toggle or push-button action; marked to show whether unit is off, on, or tripped.

1. Configuration: Nonreversing.

2. Overload Relays: Inverse-time-current characteristics; NEMA ICS 2, Class 10 tripping characteristics; heaters matched to nameplate full-load current of actual protected motor; external reset push button; bimetallic type.

3. Flush mounting.

4. Red pilot light.

D. Integral Horsepower Manual Controllers: "Quick-make, quick-break" toggle or push-button action; marked to show whether unit is off, on, or tripped.

1. Configuration: Nonreversing.

2. Overload Relays: Inverse-time-current characteristics; NEMA ICS 2, Class 10 tripping characteristics; heaters and sensors in each phase, matched to nameplate full-load current of actual protected motor and having appropriate adjustment for duty cycle; external reset push button**;** bimetallic type**;** melting alloy type.

3. Flush mounting.

4. Red pilot light.

5. N.O. auxiliary contact.

E. Magnetic Controllers: Full voltage, across the line, electrically held.

1. Configuration: Nonreversing.

2. Contactor Coils: Pressure-encapsulated type with coil transient suppressors.

a. Operating Voltage: Depending on contactor NEMA size and line-voltage rating, manufacturer's standard matching control power or line voltage.

3. Power Contacts: Totally enclosed, double-break, silver-cadmium oxide; assembled to allow inspection and replacement without disturbing line or load wiring.

4. Control Circuits: 120-V ac; obtained from integral CPT, with primary and secondary fuses with control power source of sufficient capacity to operate integral devices and remotely located pilot, indicating, and control devices.

a. CPT Spare Capacity: 50 VA.

5. Melting Alloy Overload Relays:

a. Inverse-time-current characteristic.

b. Class 10 tripping characteristic.

c. Heaters in each phase matched to nameplate full-load current of actual protected motor and with appropriate adjustment for duty cycle.

6. Bimetallic Overload Relays:

a. Inverse-time-current characteristic.

b. Class 10 tripping characteristic.

c. Heaters in each phase matched to nameplate full-load current of actual protected motor and with appropriate adjustment for duty cycle.

d. Ambient compensated.

e. Automatic resetting.

7. Solid-State Overload Relay:

a. Switch or dial selectable for motor running overload protection.

b. Sensors in each phase.

c. Class 10 tripping characteristic selected to protect motor against voltage and current unbalance and single phasing.

d. Class II ground-fault protection, with start and run delays to prevent nuisance trip on starting.

e. Analog communication module.

8. N.C., isolated overload alarm contact.

9. External overload reset push button.

F. Combination Magnetic Controller: Factory-assembled combination of magnetic controller, OCPD, and disconnecting means.

1. Fusible Disconnecting Means:

a. NEMA KS 1, heavy-duty, horsepower-rated, fusible switch with clips or bolt pads to accommodate indicated fuses.

b. Lockable Handle: Accepts three padlocks and interlocks with cover in closed position.

c. Auxiliary Contacts: N.O./N.C., arranged to activate before switch blades open.

2. Nonfusible Disconnecting Means:

a. NEMA KS 1, heavy-duty, horsepower-rated, nonfusible switch.

b. Lockable Handle: Accepts three padlocks and interlocks with cover in closed position.

c. Auxiliary Contacts: N.O./N.C., arranged to activate before switch blades open.

3. MCP Disconnecting Means:

a. UL 489, NEMA AB 1, and NEMA AB 3, with interrupting capacity to comply with available fault currents, instantaneous-only circuit breaker with front-mounted, field-adjustable, short-circuit trip coordinated with motor locked-rotor amperes.

b. Lockable Handle: Accepts three padlocks and interlocks with cover in closed position.

c. Auxiliary contacts "a" and "b" arranged to activate with MCP handle.

d. N.C. alarm contact that operates only when MCP has tripped.

e. Current-limiting module to increase controller short-circuit current (withstand) rating to 100 kA.

4. MCCB Disconnecting Means:

a. UL 489, NEMA AB 1, and NEMA AB 3, with interrupting capacity to comply with available fault currents; thermal-magnetic MCCB, with inverse time-current element for low-level overloads and instantaneous magnetic trip element for short circuits.

b. Front-mounted, adjustable magnetic trip setting for circuit-breaker frame sizes 250 A and larger.

c. Lockable Handle: Accepts three padlocks and interlocks with cover in closed position.

d. Auxiliary contacts "a" and "b" arranged to activate with MCCB handle.

e. N.C. alarm contact that operates only when MCCB has tripped.

2.03 REDUCED-VOLTAGE MAGNETIC CONTROLLERS

A. General Requirements for Reduced-Voltage Magnetic Controllers: Comply with NEMA ICS 2, general purpose, Class A; closed-transition; adjustable time delay on transition.

B. Reduced-Voltage Magnetic Controllers: Reduced voltage, electrically held.

1. Configuration:

a. Wye-Delta Controller: Four contactors, with a three-phase starting resistor/reactor bank.

b. Part-Winding Controller: Separate START and RUN contactors, field-selectable for 1/2- or 2/3-winding start mode, with either six- or nine-lead motors; with separate overload relays for starting and running sequences.

c. Autotransformer Reduced-Voltage Controller: Medium-duty service, with integral overtemperature protection; taps for starting at 50, 65, and 80 percent of line voltage; two START and one RUN contactors.

2. Contactor Coils: Pressure-encapsulated type with coil transient suppressors.

a. Operating Voltage: Depending on contactor NEMA size and line-voltage rating, manufacturer's standard matching control power or line voltage.

3. Power Contacts: Totally enclosed, double-break, silver-cadmium oxide; assembled to allow inspection and replacement without disturbing line or load wiring.

4. Control Circuits: 120V ac; obtained from integral CPT, with primary and secondary fuses, with control power source of sufficient capacity to operate integral devices and remotely located pilot, indicating, and control devices.

a. CPT Spare Capacity: 50VA.

5. Melting Alloy Overload Relays:

a. Inverse-time-current characteristic.

b. Class 10 tripping characteristic.

c. Heaters in each phase matched to nameplate full-load current of actual protected motor and with appropriate adjustment for duty cycle.

6. Bimetallic Overload Relays:

a. Inverse-time-current characteristic.

b. Class 10 tripping characteristic.

c. Heaters in each phase matched to nameplate full-load current of actual protected motor and with appropriate adjustment for duty cycle.

d. Ambient compensated.

e. Automatic resetting.

7. Solid-State Overload Relay:

a. Switch or dial selectable for motor running overload protection.

b. Sensors in each phase.

c. Class 10 tripping characteristic selected to protect motor against voltage and current unbalance and single phasing.

d. Class II ground-fault protection, with start and run delays to prevent nuisance trip on starting.

e. Analog communication module.

8. N.C., isolated overload alarm contact.

9. External overload reset push button.

C. Combination Reduced-Voltage Magnetic Controller: Factory-assembled combination of reduced-voltage magnetic controller, OCPD, and disconnecting means.

1. Fusible Disconnecting Means:

a. NEMA KS 1, heavy-duty, horsepower-rated, fusible switch with clips or bolt pads to accommodate indicated fuses.

b. Lockable Handle: Accepts three padlocks and interlocks with cover in closed position.

c. Auxiliary Contacts: N.O./N.C., arranged to activate before switch blades open.

2. Nonfusible Disconnecting Means:

a. NEMA KS 1, heavy-duty, horsepower-rated, nonfusible switch.

b. Lockable Handle: Accepts three padlocks and interlocks with cover in closed position.

c. Auxiliary Contacts: N.O./N.C., arranged to activate before switch blades open.

3. MCP Disconnecting Means:

a. UL 489, NEMA AB 1, and NEMA AB 3, with interrupting capacity to comply with available fault currents, instantaneous-only circuit breaker with front-mounted, field-adjustable, short-circuit trip coordinated with motor locked-rotor amperes.

b. Lockable Handle: Accepts three padlocks and interlocks with cover in closed position.

c. Auxiliary contacts "a" and "b" arranged to activate with MCP handle.

d. N.C. alarm contact that operates only when MCP has tripped.

e. Current-limiting module to increase controller short-circuit current (withstand) rating to 100 kA.

4. MCCB Disconnecting Means:

a. UL 489, NEMA AB 1, and NEMA AB 3, with interrupting capacity to comply with available fault currents; thermal-magnetic MCCB, with inverse time-current element for low-level overloads and instantaneous magnetic trip element for short circuits.

b. Front-mounted, adjustable magnetic trip setting for circuit-breaker frame sizes 250 A and larger.

c. Lockable Handle: Accepts three padlocks and interlocks with cover in closed position.

d. Auxiliary contacts "a" and "b" arranged to activate with MCCB handle.

e. N.C. alarm contact that operates only when MCCB has tripped.

2.04 ENCLOSURES

A. Enclosed Controllers: NEMA ICS 6, to comply with environmental conditions at installed location.

1. Dry and Clean Indoor Locations: Type 1.

2. Outdoor Locations: Type 3R.

3. Other Wet or Damp Indoor Locations: Type 4.

4. Indoor Locations Subject to Dust, Falling Dirt, and Dripping Noncorrosive Liquids: Type 12.

5. Hazardous Areas Indicated on Drawings: Type 7.

2.05 ACCESSORIES

A. General Requirements for Control Circuit and Pilot Devices: NEMA ICS 5; factory installed in controller enclosure cover unless otherwise indicated.

1. Push Buttons, Pilot Lights, and Selector Switches: Heavy-duty type.

a. Push Buttons: Covered Lockable Recessed types; maintained as indicated.

b. Pilot Lights: LED types; colors as indicated**;** push to test.

c. Selector Switches: Rotary type.

2. Elapsed Time Meters: Heavy duty with digital readout in hours**;** nonresettable.

3. Meters: Panel type, 2-1/2-inch minimum size with 90- or 120-degree scale and plus or minus two percent accuracy. Where indicated, provide selector switches with an off position.

B. Reversible N.C./N.O. auxiliary contact(s).

C. Control Relays: Auxiliary and adjustable pneumatic time-delay relays.

D. Phase-Failure, Phase-Reversal, and Undervoltage and Overvoltage Relays: Solid-state sensing circuit with isolated output contacts for hard-wired connections. Provide adjustable undervoltage, overvoltage, and time-delay settings.

E. Breather and drain assemblies, to maintain interior pressure and release condensation in Type 4 enclosures installed outdoors or in unconditioned interior spaces subject to humidity and temperature swings.

F. Space heaters, with N.C. auxiliary contacts, to mitigate condensation in Type 3R enclosures installed outdoors or in unconditioned interior spaces subject to humidity and temperature swings.

G. Sun shields installed on fronts, sides, and tops of enclosures installed outdoors and subject to direct and extended sun exposure.

H. Cover gaskets for Type 1 enclosures.

I. Terminals for connecting power factor correction capacitors to the line side of overload relays.

J. Spare control wiring terminal blocks, quantity as indicated; unwired.

K. Fan Status Relays

1. Undercurrent relay to output signal (open contact) when fan motor is running at below normal commanded load. Input signal: 1-5 amps. Relay to have an adjustable set point to open output contacts (20% to 90% of 5 amp input signal). Set relay to open contacts at 50% of motor full load current.

2. Current Transformer: 1-5 amp output, current transformer ratio to be matched so that 5 amp output matches motor full load current. Current transformer to be 2% metering accuracy with burden adequate for connected relays.

PART 3 - EXECUTION

3.01 EXAMINATION

A. Examine areas and surfaces to receive enclosed controllers, with Installer present, for compliance with requirements and other conditions affecting performance of the Work.

B. Examine enclosed controllers before installation. Reject enclosed controllers that are wet, moisture damaged, or mold damaged.

C. Proceed with installation only after unsatisfactory conditions have been corrected.

3.02 INSTALLATION

A. Wall-Mounted Controllers: Install enclosed controllers on walls with tops at uniform height unless otherwise indicated, and by bolting units to wall or mounting on lightweight structural-steel channels bolted to wall. For controllers not at walls, provide freestanding racks complying with Division 26 Section "Hangers and Supports for Electrical Systems."

B. Floor-Mounted Controllers: Install enclosed controllers on 4-inch nominal-thickness concrete base. Comply with requirements for concrete base specified in Division 03 Section "Cast-in-Place Concrete".

1. Install dowel rods to connect concrete base to concrete floor. Unless otherwise indicated, install dowel rods on 18-inch centers around the full perimeter of concrete base.

2. For supported equipment, install epoxy-coated anchor bolts that extend through concrete base and anchor into structural concrete floor.

3. Place and secure anchorage devices. Use setting drawings, templates, diagrams, instructions, and directions furnished with items to be embedded.

4. Install anchor bolts to elevations required for proper attachment to supported equipment.

C. Seismic Bracing: Comply with requirements specified in Division 26 Section "Vibration and Seismic Controls for Electrical Systems."

D. Temporary Lifting Provisions: Remove temporary lifting eyes, channels, and brackets and temporary blocking of moving parts from enclosures and components.

E. Install fuses in each fusible-switch enclosed controller.

F. Install fuses in control circuits if not factory installed. Comply with requirements in Division 26 Section "Fuses."

G. Install heaters in thermal overload relays. Select heaters based on actual nameplate full-load amperes after motors have been installed.

H. Install, connect, and fuse thermal-protector monitoring relays furnished with motor-driven equipment.

I. Install power factor correction capacitors. Connect to the line side of overload relays. If connected to the load side of overload relays, adjust overload heater sizes to accommodate the reduced motor full-load currents.

J. Comply with NECA 1.

3.03 FAN STATUS

A. Provide relay, current transformer and associated wiring in motor controller enclosure to monitor current on load side of last disconnect for air flow status at fans indicated in the drawings and connect to the smoke control system.

3.04 WIRING

A. Wiring shall conform to applicable sections of these specifications. Provide wiring from branch circuit overcurrent device to motor controller to motor terminals, including installation of starter and all connections. Motor controllers provided under Division 26 shall be combination type. Where starters furnished under other Divisions of the specification or by Owner do not include an integral disconnect switch, a separately mounted disconnect switch shall be provided. Provide raceway and conductors as shown for remote control, or interlock connections. Coordinate other control wiring with Division 25 of the Specifications. Provide overload elements in controllers sized to match motor nameplate full load amperes. Space within controllers shall not be used as a junction box.

B. Fan Shutdown Wiring: Provide 1/2" raceway with 2#14 AWG conductor from each fan motor controller to the fire alarm shutdown relay(s). Provide wiring of interlock connections for all (over 000 CFM) fan motor controller control circuits via Division 23 furnished fan shutdown relay to shutdown fans upon receipt of fire alarm.

3.05 IDENTIFICATION

A. Identify enclosed controllers, components, and control wiring. Comply with requirements for identification specified in Division 26 Section "Identification for Electrical Systems."

1. Identify field-installed conductors, interconnecting wiring, and components; provide warning signs.

2. Label each enclosure with engraved nameplate.

3. Label each enclosure-mounted control and pilot device.

3.06 CONTROL WIRING INSTALLATION

A. Install wiring between enclosed controllers and remote devices.

B. Bundle, train, and support wiring in enclosures.

C. Connect selector switches and other automatic-control selection devices where applicable.

1. Connect selector switches to bypass only those manual- and automatic-control devices that have no safety functions when switch is in manual-control position.

2. Connect selector switches with enclosed-controller circuit in both manual and automatic positions for safety-type control devices such as low- and high-pressure cutouts, high-temperature cutouts, and motor overload protectors.

3.07 FIELD QUALITY CONTROL

A. Testing Agency: Owner will engage a qualified testing agency to perform tests and inspections.

B. Manufacturer's Field Service: Engage a factory-authorized service representative to inspect, test, and adjust components, assemblies, and equipment installations, including connections.

C. Perform tests and inspections.

1. Manufacturer's Field Service: Engage a factory-authorized service representative to inspect components, assemblies, and equipment installations, including connections, and to assist in testing.

D. Acceptance Testing Preparation:

1. Test insulation resistance for each enclosed controller, component, connecting supply, feeder, and control circuit.

2. Test continuity of each circuit.

E. Tests and Inspections:

1. Inspect controllers, wiring, components, connections, and equipment installation. Test and adjust controllers, components, and equipment.

2. Test insulation resistance for each enclosed-controller element, component, connecting motor supply, feeder, and control circuits.

3. Test continuity of each circuit.

4. Verify that voltages at controller locations are within plus or minus 10 percent of motor nameplate rated voltages. If outside this range for any motor, notify Construction Manager before starting the motor(s).

5. Test each motor for proper phase rotation.

6. Perform each electrical test and visual and mechanical inspection stated in NETA Acceptance Testing Specification. Certify compliance with test parameters.

7. Correct malfunctioning units on-site, where possible, and retest to demonstrate compliance; otherwise, replace with new units and retest.

8. Perform the following infrared (thermographic) scan tests and inspections and prepare reports:

   a. Initial Infrared Scanning: After Substantial Completion, but not more than 60 days after Final Acceptance, perform an infrared scan of each multi-pole enclosed controller. Remove front panels so joints and connections are accessible to portable scanner.

   b. Follow-up Infrared Scanning: Perform an additional follow-up infrared scan of each multi-pole enclosed controller 11 months after date of Substantial Completion.

   c. Instruments and Equipment: Use an infrared scanning device designed to measure temperature or to detect significant deviations from normal values. Provide calibration record for device.

9. Test and adjust controls, remote monitoring, and safeties. Replace damaged and malfunctioning controls and equipment.

F. Enclosed controllers will be considered defective if they do not pass tests and inspections.

G. Prepare test and inspection reports including a certified report that identifies enclosed controllers and that describes scanning results. Include notation of deficiencies detected, remedial action taken, and observations after remedial action.

3.08 ADJUSTING

A. Set field-adjustable switches, auxiliary relays, time-delay relays, timers, and overload-relay pickup and trip ranges.

B. Adjust overload-relay heaters or settings if power factor correction capacitors are connected to the load side of the overload relays.

C. Adjust the trip settings of MCPs and thermal-magnetic circuit breakers with adjustable instantaneous trip elements. Initially adjust to six times the motor nameplate full-load ampere ratings and attempt to start motors several times, allowing for motor cooldown between starts. If tripping occurs on motor inrush, adjust settings in increments until motors start without tripping. Do not exceed eight times the motor full-load amperes (or 11 times for NEMA Premium Efficient motors if required). Where these maximum settings do not allow starting of a motor, notify Construction Manager before increasing settings.

D. Set the taps on reduced-voltage autotransformer controllers at 50 percent.

E. Set field-adjustable switches and program microprocessors for required start and stop sequences in reduced-voltage solid-state controllers.

F. Set field-adjustable circuit-breaker trip ranges.

3.09 PROTECTION

A. Temporary Heating: Apply temporary heat to maintain temperature according to manufacturer's written instructions until enclosed controllers are ready to be energized and placed into service.

B. Replace controllers whose interiors have been exposed to water or other liquids prior to Substantial Completion.

3.10 DEMONSTRATION

A. Engage a factory-authorized service representative to train Owner's maintenance personnel to adjust, operate, and maintain enclosed controllers, and to use and reprogram microprocessor-based, reduced-voltage solid-state controllers.

END OF SECTION

SECTION VII: LIST OF DRAWINGS - EXHIBIT C

LIST OF DRAWINGS

By this reference, the following drawings are incorporated in this Invitation For Bids.

Sheet Identification	Number of Sheets

IFB 4-2550 EXHIBIT B

ORANGE COUNTY TRANSPORTATION AUTHORITY
REPLACEMENT OF MECHANICAL UNITS AT SANTA ANA BUS BASE

4301 W MacArthur Blvd, Santa Ana, CA 92704
CONTRACT NO. C-4-2550

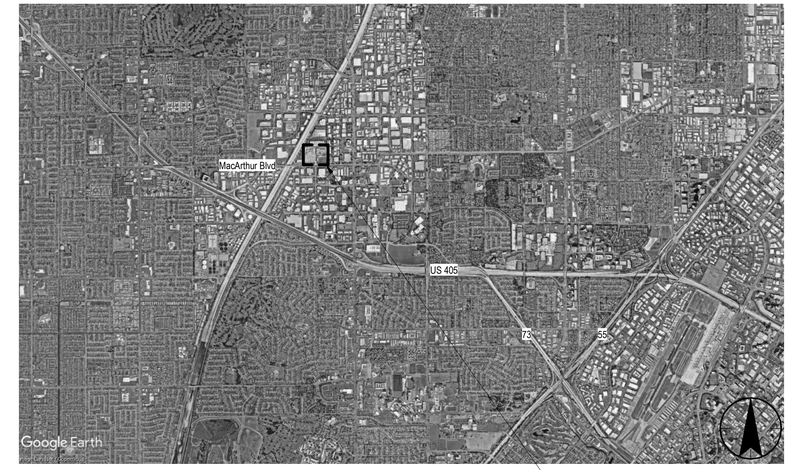

PROJECT LOCATION

VICINITY MAP

SHEET INDEX

OPERATIONS BUILDING
GENERAL
G-000P COVERSHEET
G-100P OVERALL SITE PLAN

MECHANICAL DEMO
MD-200P OPERATIONS BUILDING MECHANICAL DEMO ROOF PLAN

ELECTRICAL DEMO
ED-210P OPERATIONS BUILDING ELECTRICAL DEMO ROOF PLAN

STRUCTURAL
S-100P GENERAL NOTES
S-200P OVERALL PLAN
S-300P OPERATIONS BUILDING STRUCTURAL ROOF PLAN
S-600P ANCHORAGE SCHEDULES

ARCHITECTURAL
A-100P ARCHITECTURAL SITE PLAN
A-500P DETAILS

MECHANICAL
M-001P MECHANICAL GENERAL NOTES, SYMBOLS AND ANNOTATIONS
M-002P PROJECT NOTES AND SHEET INDEX
M-003P FAN SCHEDULE
M-004P ROOFTOP AND MAKE UP AIR SCHEDULES
M-005P HEAT PUMP AND AIR CONDITIONER SCHEDULES
M-006P MECHANICAL DETAILS
M-007P MECHANICAL DETAILS
M-008P MECHANICAL CONTROLS
M-009P MECHANICAL CONTROLS
M-200P OPERATIONS BUILDING MECHANICAL ROOF PLAN
M-300P TITLE 24 CODE COMPLIANCE
M-301P TITLE 24 CODE COMPLIANCE

ELECTRICAL
E-001P SYMBOLS, NOTES AND ANNOTATIONS
E-002P SCHEMATIC SYMBOLS AND ELECTRICAL DRAWING INDEX
E-210P OPERATIONS BUILDING ELECTRICAL ROOF PLAN
E-500P ELECTRICAL DETAILS
E-600P ELECTRICAL SINGLE LINE DIAGRAM
E-601P ELECTRICAL SINGLE LINE DIAGRAM
E-700P PANEL SCHEDULES
E-701P PANEL SCHEDULES
E-702P PANEL SCHEDULES
E-703P PANEL SCHEDULES
E-704P PANEL SCHEDULES
E-800P CONDUIT SCHEDULES
E-801P CONDUIT SCHEDULES
E-802P CONDUIT SCHEDULES

MAINTENANCE BUILDING
GENERAL
G-000M COVERSHEET
G-100 MOVERALL SITE PLAN

MECHANICAL DEMO
MD-210M MAINTENANCE BUILDING MECHANICAL DEMO ROOF PLAN

ELECTRICAL DEMO
ED-220M MAINTENANCE BUILDING ELECTRICAL OVERALL DEMO ROOF PLAN
ED-221M MAINTENANCE BUILDING SECTION ONE ELECTRICAL DEMO ROOF PLAN
ED-222M MAINTENANCE BUILDING SECTION TWO ELECTRICAL DEMO ROOF PLAN
ED-223M MAINTENANCE BUILDING SECTION THREE ELECTRICAL DEMO ROOF PLAN

STRUCTURAL
S-100M GENERAL NOTES
S-200M OVERALL PLAN
S-301M MAINTENANCE BUILDING STRUCTURAL ROOF PLAN
S-600M ANCHORAGE SCHEDULES

ARCHITECTURAL
A-100M ARCHITECTURAL SITE PLAN
A-500M DETAILS

MECHANICAL
M-001M MECHANICAL GENERAL NOTES, SYMBOLS AND ANNOTATIONS
M-002M PROJECT NOTES AND SHEET INDEX
M-003M FAN SCHEDULE
M-004M ROOFTOP AND MAKE UP AIR SCHEDULES
M-005M HEAT PUMP AND AIR CONDITIONER SCHEDULES
M-006M MECHANICAL DETAILS
M-007M MECHANICAL DETAILS
M-008M MECHANICAL CONTROLS
M-009M MECHANICAL CONTROLS
M-210M MAINTENANCE BUILDING OVERALL MECHANICAL ROOF PLAN
M-211M MAINTENANCE BUILDING SECTION ONE MECHANICAL ROOF PLAN
M-212M MAINTENANCE BUILDING SECTION TWO MECHANICAL ROOF PLAN
M-213M MAINTENANCE BUILDING SECTION THREE MECHANICAL ROOF PLAN
M-300M TITLE 24 CODE COMPLIANCE
M-301M TITLE 24 CODE COMPLIANCE

ELECTRICAL
E-001M SYMBOLS, NOTES AND ANNOTATIONS
E-002M SCHEMATIC SYMBOLS AND ELECTRICAL DRAWING INDEX
E-220M MAINTENANCE BUILDING OVERALL ELECTRICAL ROOF PLAN
E-221M MAINTENANCE BUILDING SECTION ONE ELECTRICAL ROOF PLAN
E-222M MAINTENANCE BUILDING SECTION TWO ELECTRICAL ROOF PLAN
E-223M MAINTENANCE BUILDING SECTION THREE ELECTRICAL ROOF PLAN
E-500M ELECTRICAL DETAILS
E-600M ELECTRICAL SINGLE LINE DIAGRAM
E-601M ELECTRICAL SINGLE LINE DIAGRAM
E-700M PANEL SCHEDULES
E-701M PANEL SCHEDULES
E-702M PANEL SCHEDULES
E-703M PANEL SCHEDULES
E-704M PANEL SCHEDULES
E-800M CONDUIT SCHEDULES
E-801M CONDUIT SCHEDULES
E-802M CONDUIT SCHEDULES

FUEL/ BRAKE/ TIRE REPAIR BUILDING
GENERAL
G-000F COVERSHEET
G-100F OVERALL SITE PLAN

MECHANICAL DEMO
MD-220F FUEL/BRAKE/TIRE REPAIR BUILDING MECHANICAL DEMO ROOF PLAN

ELECTRICAL DEMO
ED-230F FUEL/BRAKE/TIRE REPAIR BUILDING ELECTRICAL DEMO ROOF PLAN

STRUCTURAL
S-100F GENERAL NOTES
S-200F OVERALL PLAN
S-302F FUEL/BRAKE/TIRE REPAIR BUILDING STRUCTURAL ROOF PLAN
S-600F ANCHORAGE SCHEDULES

ARCHITECTURAL
A-100F ARCHITECTURAL SITE PLAN
A-500F DETAILS

EQUIPMENT
Q-001F INDUSTRIAL EQUIPMENT - GENERAL NOTES
Q-101F FUEL/BREAKE/TIRE REPAIR BUILDING - BELLOW VACUUM SYSTEM PLAN
Q-102F FUEL/BREAKE/TIRE REPAIR BUILDING - BELLOW VACUUM SYSTEM ROOF PLAN
Q-600F INDUSTRIAL EQUIPMENT - DETAILS

MECHANICAL
M-001F MECHANICAL GENERAL NOTES, SYMBOLS AND ANNOTATIONS
M-002F PROJECT NOTES AND SHEET INDEX
M-003F FAN SCHEDULE
M-004F ROOFTOP AND MAKE UP AIR SCHEDULES
M-005F HEAT PUMP AND AIR CONDITIONER SCHEDULES
M-006F MECHANICAL DETAILS
M-007F MECHANICAL DETAILS
M-008F MECHANICAL CONTROLS
M-009F MECHANICAL CONTROLS
M-220F FUEL/BRAKE/TIRE REPAIR BUILDING MECHANICAL ROOF PLAN
M-300F TITLE 24 CODE COMPLIANCE
M-301F TITLE 24 CODE COMPLIANCE

ELECTRICAL
E-001F SYMBOLS, NOTES AND ANNOTATIONS
E-002F SCHEMATIC SYMBOLS AND ELECTRICAL DRAWING INDEX
E-230F FUEL-BRAKE-TIRE REPAIR BUILDING ELECTRICAL ROOF PLAN
E-500F ELECTRICAL DETAILS
E-600F ELECTRICAL SINGLE LINE DIAGRAM
E-601F ELECTRICAL SINGLE LINE DIAGRAM
E-700F PANEL SCHEDULES
E-701F PANEL SCHEDULES
E-702F PANEL SCHEDULES
E-703F PANEL SCHEDULES
E-704F PANEL SCHEDULES
E-800F CONDUIT SCHEDULES
E-801F CONDUIT SCHEDULES
E-802F CONDUIT SCHEDULES

BUS WASH/ BRAKE DYNO BUILDING
GENERAL
G-000W COVERSHEET
G-100W OVERALL SITE PLAN

MECHANICAL DEMO
MD-230W BUS WASH/BRAKE DYNO BUILDING MECHANICAL DEMO ROOF PLAN

ELECTRICAL DEMO
ED-240W BUS WASH/BRAKE DYNO BUILDING ELETRICAL DEMO ROOF PLAN

STRUCTURAL
S-100W GENERAL NOTES
S-200W OVERALL PLAN
S-303W BUS WASH/BRAKE DYNO BUILDING STRUCTURAL ROOF PLAN
S-600W ANCHORAGE SCHEDULES

ARCHITECTURAL
A-100W ARCHITECTURAL SITE PLAN
A-500W DETAILS

MECHANICAL
M-001W MECHANICAL GENERAL NOTES, SYMBOLS AND ANNOTATIONS
M-002W PROJECT NOTES AND SHEET INDEX
M-003W FAN SCHEDULE
M-004W ROOFTOP AND MAKE UP AIR SCHEDULES
M-005W HEAT PUMP AND AIR CONDITIONER SCHEDULES
M-006W MECHANICAL DETAILS
M-007W MECHANICAL DETAILS
M-008W MECHANICAL CONTROLS
M-009W MECHANICAL CONTROLS
M-230W BUS WASH/BRAKE DYNO BUILDING MECHANICAL ROOF PLAN
M-300W TITLE 24 CODE COMPLIANCE
M-301W TITLE 24 CODE COMPLIANCE

ELECTRICAL
E-001W SYMBOLS, NOTES AND ANNOTATIONS
E-002W SCHEMATIC SYMBOLS AND ELECTRICAL DRAWING INDEX
E-240W BUS WASH-BRAKE DYNO BUILDING ELECTRICAL ROOF PLAN
E-500W ELECTRICAL DETAILS
E-600W ELECTRICAL SINGLE LINE DIAGRAM
E-601W ELECTRICAL SINGLE LINE DIAGRAM
E-700W PANEL SCHEDULES
E-701W PANEL SCHEDULES
E-702W PANEL SCHEDULES
E-703W PANEL SCHEDULES
E-704W PANEL SCHEDULES
E-800W CONDUIT SCHEDULES
E-801W CONDUIT SCHEDULES
E-802W CONDUIT SCHEDULES

DETAIL CLEANING BUILDING
GENERAL
G-000D COVERSHEET
G-100D OVERALL SITE PLAN

MECHANICAL DEMO
MD-240D DETAIL/CLEANING BUILDING MECHANICAL DEMO ROOF PLAN

ELECTRICAL DEMO
ED-250D DETAIL/CLEANING BUILDING ELECTRICAL DEMO ROOF PLAN

STRUCTURAL
S-100D GENERAL NOTES
S-200D OVERALL PLAN
S-304D DETAIL/CLEANING BUILDING STRUCTURAL ROOF PLAN
S-600D ANCHORAGE SCHEDULES

ARCHITECTURAL
A-100D ARCHITECTURAL SITE PLAN
A-500D DETAILS

MECHANICAL
M-001D MECHANICAL GENERAL NOTES, SYMBOLS AND ANNOTATIONS
M-002D PROJECT NOTES AND SHEET INDEX
M-003D FAN SCHEDULE
M-004D ROOFTOP AND MAKE UP AIR SCHEDULES
M-005D HEAT PUMP AND AIR CONDITIONER SCHEDULES
M-006D MECHANICAL DETAILS
M-007D MECHANICAL DETAILS
M-008D MECHANICAL CONTROLS
M-009D MECHANICAL CONTROLS
M-240D DETAIL/CLEANING BUILDING MECHANICAL ROOF PLAN
M-300D TITLE 24 CODE COMPLIANCE
M-301D TITLE 24 CODE COMPLIANCE

ELECTRICAL
E-001D SYMBOLS, NOTES AND ANNOTATIONS
E-002D SCHEMATIC SYMBOLS AND ELECTRICAL DRAWING INDEX
E-250D DETAIL-CLEANING BUILDING ELECTRICAL ROOF PLAN
E-500D ELECTRICAL DETAILS
E-600D ELECTRICAL SINGLE LINE DIAGRAM
E-601D ELECTRICAL SINGLE LINE DIAGRAM
E-700D PANEL SCHEDULES
E-701D PANEL SCHEDULES
E-702D PANEL SCHEDULES
E-703D PANEL SCHEDULES
E-704D PANEL SCHEDULES
E-800D CONDUIT SCHEDULES
E-801D CONDUIT SCHEDULES
E-802D CONDUIT SCHEDULES

GENERAL INFORMATION

APPLICABLE CODES:
2022 CALIFORNIA MECHANICAL CODE
2022 CALIFORNIA PLUMBING CODE
2022 NATIONAL ELECTRICAL CODE
2022 TITLE 24 REQUIREMENTS
CALGREEN STANDARDS

LICENSED ARCHITECT
PATRICK DAVID MARTIN
No. C26017
REN. 3/31/2025
STATE OF CALIFORNIA

Stantec
801 S. Figueroa Street, Suite 300
Los Angeles, CA 90017

Copyright Reserved
The contractor must verify and be responsible for all dimensions. DO NOT scale the drawing - any errors or omissions shall be reported to Stantec without delay.
This drawing is the property of Stantec and shall not be reproduced in whole or in part. Reproduction or use for any purpose other than that authorized by Stantec is prohibited.

REVISION	DESCRIPTION	DATE
5	100% RESUBMITTAL 2	08/19/2024
	100% RESUBMITTAL	5/13/2024
3	100% CONSTRUCTION DRAWING SUBMITTAL	03/18/2024
2	90% UPDATED CONSTRUCTION SUBMITTAL	02/13/2024
1	90% CONSTRUCTION DRAWING SUBMITTAL	12/07/2023

REPLACEMENT OF MECHANICAL UNITS AT SANTA ANA BUS BASE
4301 W MacArthur Blvd, Santa Ana, CA 92704

COVERSHEET

JOB #:	
DESIGN BY:	Designer
DRAWN BY:	Author
CHECKED BY:	Checker
DATE:	
SCALE:	12" = 1'-0"
SHEET:	G-000

OCTA
ORANGE COUNTY TRANSPORTATION AUTHORITY
550 SOUTH MAIN STREET, ORANGE, CA

Autodesk Docs://2014233703_Santa_Ana_Bus/arch_2014233703-Revit22.rvt

5/9/2024 10:14:27 AM

ORANGE COUNTY TRANSPORTATION AUTHORITY
REPLACEMENT OF MECHANICAL UNITS AT SANTA ANA BUS BASE - OPERATIONS BUILDING

4301 W MacArthur Blvd, Santa Ana, CA 92704

CONTRACT NO. C-4-2550

SHEET INDEX

GENERAL
G-000P COVERSHEET
G-100P OVERALL SITE PLAN

MECHANICAL DEMO
MD-200P OPERATIONS BUILDING MECHANICAL DEMO ROOF PLAN

ELECTRICAL DEMO
ED-210P OPERATIONS BUILDING ELECTRICAL DEMO ROOF PLAN

STRUCTURAL
S-100P GENERAL NOTES
S-200P OVERALL PLAN
S-300P OPERATIONS BUILDING STRUCTURAL ROOF PLAN
S-600P ANCHORAGE SCHEDULES

ARCHITECTURAL
A-100P ARCHITECTURAL SITE PLAN
A-500P DETAILS

MECHANICAL
M-001P MECHANICAL GENERAL NOTES, SYMBOLS AND ANNOTATIONS
M-002P PROJECT NOTES AND SHEET INDEX
M-003P FAN SCHEDULE
M-004P ROOFTOP AND MAKE UP AIR SCHEDULES
M-005P HEAT PUMP AND AIR CONDITIONER SCHEDULES
M-006P MECHANICAL DETAILS
M-007P MECHANICAL DETAILS
M-008P MECHANICAL CONTROLS
M-009P MECHANICAL CONTROLS
M-200P OPERATIONS BUILDING MECHANICAL ROOF PLAN
M-300P TITLE 24 CODE COMPLIANCE
M-301P TITLE 24 CODE COMPLIANCE

ELECTRICAL
E-001P SYMBOLS, NOTES AND ANNOTATIONS
E-002P SCHEMATIC SYMBOLS AND ELECTRICAL DRAWING INDEX
E-210P OPERATIONS BUILDING ELECTRICAL ROOF PLAN
E-500P ELECTRICAL DETAILS
E-600P ELECTRICAL SINGLE LINE DIAGRAM
E-601P ELECTRICAL SINGLE LINE DIAGRAM
E-700P PANEL SCHEDULES
E-701P PANEL SCHEDULES
E-702P PANEL SCHEDULES
E-703P PANEL SCHEDULES
E-704P PANEL SCHEDULES
E-800P CONDUIT SCHEDULES
E-801P CONDUIT SCHEDULES
E-802P CONDUIT SCHEDULES

GENERAL INFORMATION

APPLICABLE CODES:
2022 CALIFORNIA MECHANICAL CODE
2022 CALIFORNIA PLUMBING CODE
2022 NATIONAL ELECTRICAL CODE
2022 TITLE 24 REQUIREMENTS
CALGREEN STANDARDS

ABBREVIATIONS

(E)	EXISTING
AB	ANCHOR BOLT
AC	AIR CONDITIONING
ACT	ACOUSTICAL TILE
ADJ	ADJACENT/ADJUSTABLE
AFF	ABOVE FINISH FLOOR
AFG	ABOVE FINISH GRADE
AHU	AIR HANDLING UNIT
ALT	ALTERNATE NO.
ALUM	ALUMINUM
ANOD	ANODIZED
ANSI	AMERICAN NATIONAL STANDARDS INSTITUTE
APPD	APPROVED
APPROX	APPROXIMATELY
ARCH	ARCHITECT
AVG	AVERAGE
BD	BOARD
BLDG	BUILDING
BLKG	BLOCKING
BM	BEAM/BENCH MARK
BOS	BOTTOM OF STEEL
BOT	BOTTOM
BUR	BUILT UP ROOFING
CEM	CEMENT
CF	CUBIC FOOT / FEET
CF/CI	CONTRACTOR FURNISHED/CONTRACTOR INSTALLED
CF/OI	CONTRACTOR FURNISHED/OWNER INSTALLED
CIP	CAST IN PLACE
CJ	CONTROL JOINT / CONTRACTION JOINT
CL	CENTERLINE
CLG	CEILING
CLR	CLEAR
CMU	CONCRETE MASONRY UNIT
CO	CLEAN OUT
COL	COLUMN
CONC	CONCRETE
COND	CONDITION
CONST	CONSTRUCTION
CONT	CONTINUE / CONTINUATION / CONTINUOUS
COORD	COORDINATE
CPT	CARPET
CT	CERAMIC TILE
CTR	CENTER
CU FT	CUBIC FOOT / CUBIC FEET
CU YD	CUBIC YARDS
CW	COLD WATER
D	DEPTH / DEEP
DBL	DOUBLE
DEG	DEGREE
DEL	DELETE
DEMO	DEMOLITION
DIA	DIAMETER
DIAG	DIAGONAL
DIM	DIMENSION
DISP	DISPENSER
DN	DOWN
DR	DOOR / DRAIN
DTL	DETAIL
DWG	DRAWING
E	EAST
EA	EACH
EF	EXHAUST FAN
EJ	EXPANSION JOINT
EL	REFERENCE ELEVATION / EASEMENT LINE
ELEC	ELECTRIC / ELECTRICAL
ELEV	ELEVATOR / ELEVATION
EMER	EMERGENCY
ENGR	ENGINEER / ENGINEERING
EOS	EDGE OF SLAB
EPDM	ETHYLENE PROPYLENE DIENE MONOMOR
EQ	EQUAL
EQUIP	EQUIPMENT
EST	ESTIMATE
ETC	ET CETERA
EW	EACH WAY
EXP	EXPOSED / EXPAND / EXPANSION
FA	FIRE ALARM / FACE AREA / FRESH AREA
FACP	FIRE ALARM CONTROL PANEL
FD	FLOOR DRAIN
FDTN	FOUNDATION
FE	FIRE EXTINGUISHER
FEC	FIRE EXTINGUISHER CABINET
FH	FIRE HYDRANT / FIRE HOSE
FHC	FIRE HOSE CABINET
FIN	FINISH
FIXT	FIXTURE
FL	FLOW LINE / FLOOR LINE
FLR	FLOOR / FLOORING
FR	FRAME / FIRE RATED / FIRE RETARTANT
FT	FOOT / FEET / FIRE TREATED / FULLY TEMPERED

ABBREVIATIONS

FTG	FOOTING
FURN	FURNISH / FURNITURE
GA	GAGE
GAL	GALLONS
GALV	GALVANIZED
GC	GENERAL CONTRACTOR
GEN	GENERAL / GENERATOR
GL	GLASS / GROUND LEVEL
GLZ	GLAZING
GND	GROUND
GYP BD	GYPSUM BOARD
HC	HANDICAPPED ACCESSIBLE / HOLLOW CORE
HD	HEAD / HEAVY DUTY
HDW	HARDWARE
HM	HOLLOW METAL
HORIZ	HORIZONTAL
HT	HEIGHT
HVAC	HEATING VENTILATION AND AIR CONDITIONING
HW	HOT WATER
ID	INSIDE DIAMETER / INTERIOR DESIGN
IF	INSIDE FACE / INTAKE FAN
IN	INCHES
INCL	INCLUDING
INSTL	INSTALL
INSUL	INSULATE / INSULATION
INT	INTERIOR / INTERNAL
INV	INVERT
INV EL	INVERT ELEVATION
J BOX	JUNCTION BOX
JT	JOINT
LAM	LAMINATE
LAV	LAVATORY
LBS	POUNDS
LF	LINEAR FEET
LH	LEFT HAND
LTG	LIGHTING
MAINT	MAINTENANCE
MATL	MATERIAL
MAX	MAXIMUM
MECH	MECHANICAL
MED	MEDIUM
MEMB	MEMBRANE
MFG	MANUFACTURING
MFR	MANUFACTURER
MIN	MINIMUM
MISC	MISCELLANEOUS
MTL	METAL
N	NORTH
N/A	NOT APPLICABLE
NEG	NEGATIVE
NIC	NOT IN CONTRACT
NO	NUMBER
NOM	NOMINAL
NTS	NOT TO SCALE
OC	ON CENTER
OD	OUTSIDE DIAMETER / OUTSIDE DIMENSION
OF/CI	OWNER FURNISHED/CONTRACTOR INSTALLED
OF/OI	OWNER FURNISHED/OWNER INSTALLED
OH	OPPOSITE HAND / OVERHEAD / OVERHANG
OPP	OPPOSITE
ORIG	ORIGINAL
PAT	PATTERN
PCC	PRECAST CONCRETE
PERF	PERFORATED
PERM	PERMANENT
PL	PLATE / PROPERTY LINE
PLAM	PLASTIC LAMINATE
PLAS	PLASTER / PLASTIC
PLBG	PLUMBING
PLYWD	PLYWOOD
PNL	PANEL
PREFAB	PREFABRICATED
PREFIN	PREFINISHED
PRELIM	PRELIMINARY
PREP	PREPARATION
PROJ	PROJECT
PT	PAINT / PRESSURE TREATED
PVC	POLYVINYL CHLORIDE
QTY	QUANTITY
R	RADIUS / RISER
RA	RETURN AIR
RCP	REFLECTED CEILING PLAN
RD	ROOF DRAIN
REBAR	REINFORCED STEEL BAR
REF	REFERENCE / REFRIGERATOR
REINF	REINFORCED / REINFORCEMENT
REQD	REQUIRED
REV	REVISION
RH	RIGHT HAND
RM	ROOM

ABBREVIATIONS

RO	ROUGH OPENING
ROW	RIGHT OF WAY
RTU	ROOF TOP UNIT
S	SOUTH
SALV	SALVAGE
SAN	SANITARY
SCHED	SCHEDULE / SCHEDULED
SEC	SECOND
SECT	SECTION
SF	SQUARE FOOT / SQUARE FEET / SUPPLY FAN
SGL	SINGLE
SIM	SIMILAR
SM	SHEET METAL / SMALL / SURFACE MOUNTED
SPEC	SPECIFICATION(S)
SPLY	SUPPLY
SQ	SQUARE
SST	STAINLESS STEEL
STC	SOUND TRANSMISSION CLASS
STD	STANDARD
STL	STEEL
STL JST	STEEL JOIST
STOR	STORAGE
STRUCT	STRUCTURAL
SURF	SURFACE
SUSP	SUSPENDED
SYMM	SYMMETRICAL
T	TREAD
T&B	TOP AND BOTTOM
TBD	TO BE DETERMINED
TEL	TELEPHONE
TEMP	TEMPERATURE / TEMPORARY
THK	THICK / THICKNESS
THRES	THRESHOLD
THRU	THROUGH
TO	TOP OF ____
TOC	TOP OF CONCRETE / TOP OF CURB
TOJ	TOP OF JOIST
TOM	TOP OF MASONRY
TOP	TOP OF PARAPET / TOP OF PAVEMENT
TOS	TOP OF STEEL / TOP OF SLAB
TOW	TOP OF WALL
TS	TUBE STEEL
TYP	TYPICAL
UBC	UNIFORM BUILDING CODE
UC	UNDERCUT
UL	UNDERWRITER'S LABORATORIES
UNFIN	UNFINISHED
UNO	UNLESS NOTED OTHERWISE
UTIL	UTILITY
VAR	VARIES
VCT	VINYL COMPOSITION TILE
VERT	VERTICAL
VIF	VERIFY IN FIELD
W	WEST / WIDTH / WIDE
W/	WITH
W/O	WITHOUT
WC	WATER CLOSET / WALL COVERING
WD	WOOD / WOOD DOOR
WF	WIDE FLANGE
WT	WEIGHT
YD	YARD / YARDS

PROJECT LOCATION

VICINITY MAP

GENERAL NOTES

1 DO NOT SCALE DRAWINGS.

2 ITEMS INDICATED ON THESE DRAWINGS ARE NEW, UNLESS NOTED OTHERWISE.

3 CONTRACTOR TO PROVIDE ROOFTOP SUPPORT SYSTEMS PER SPECIFICATIONS FOR ALL PIPING, CONDUITS, AND ALL OTHER ITEMS NOT OTHERWISE DIRECTLY OR INDIRECTLY ATTACHED TO THE BUILDINGS, PROVIDE SYSTEMS AS REQUIRED TO ACCOMMODATE EXISTING PIPING, CONDUITS, ETC. AND ANY NEW PIPING, CONDUITS, ETC.

4 CONTRACTOR TO PROTECT IN PLACE ALL PORTIONS OF THE BUILDINGS NOT IN SCOPE OR NOT INTENDED TO BE DEMOLISHED OR OTHERWISE PATCHED AND REPAIRED.

5 THE FOLLOWING GENERAL NOTES APPLY TO THE ENTIRE SET OF DRAWINGS AND ARE NOT SPECIFIC TO ANY ONE DISCIPLINE

6 IT IS THE CONTRACTORS RESPONSIBILITY TO REVIEW AND COORDINATE THE WORK OF ALL SUB-CONTRACTORS, TRADES AND SUPPLIERS WITH REQUIREMENTS OF THE CONTRACT BEFORE COMMENCING CONSTRUCTION, AND ASSURE THAT ALL PARTIES ARE AWARE OF ALL REQUIREMENTS, REGARDLESS OF WHERE THE REQUIREMENTS OCCUR IN THE CONTRACT DOCUMENTS, WHICH MIGHT AFFECT THE WORK OF THAT PARTY.

7 THE WORK DESCRIBED BY THE DRAWINGS OF ANY ONE DISCIPLINE MAY BE AFFECTED BY THE WORK DESCRIBED ON DRAWINGS OF ANOTHER DISCIPLINE AND MAY REQUIRE CROSS REFERENCE. PARTIAL SETS OF DRAWINGS ARE INCOMPLETE AND SHOULD NOT BE DISTRIBUTED OR UTILIZED BY THE CONTRACTOR.

8 THE DRAWINGS AND SPECIFICATIONS ESTABLISH MINIMUM REQUIREMENTS FOR THE DESIGN AND CONSTRUCTION OF THE PROJECT.

9 ARCHITECT IS NOT RESPONSIBLE FOR ACCURACY OF EXISTING CONDITIONS SHOWN IN THESE DOCUMENTS. GC SHALL CONTACT ARCHITECT IMMEDIATELY IF ANY DISCREPANCIES OCCUR IN THE FIELD.

10 THE DRAWINGS IN THIS SET ARE DIAGRAMMATIC AND ILLUSTRATE THE INTENT OF THE DESIGN.

11 THE CONTRACTOR SHALL IDENTIFY AND NOTIFY IN WRITING TO THE ARCHITECT CONFLICTS BETWEEN THE WORK OF DIFFERENT PARTIES, AND DISCREPANCIES BETWEEN THE DOCUMENTS AND THE ACTUAL CONDITIONS AT THE EARLIEST POSSIBLE DATE SO AS TO ALLOW REASONABLE AND ADEQUATE TIME FOR THE CONFLICT TO BE RESOLVED WITHOUT DELAYING THE WORK. ALL DEVIATIONS FROM THAT WHICH IS REQUIRED BY THE CONTRACT DOCUMENTS MUST BE APPROVED IN ADVANCE BY THE ARCHITECT AND OWNER PRIOR TO PROCEEDING.

12 THE GENERAL NOTES, SYMBOLS AND DEFINITIONS APPLICABLE TO EACH DISCIPLINE CAN BE FOUND AT THE FRONT OF EACH DISCIPLINE'S SET OF DRAWINGS AND IS LISTED AS PART OF THE OVERALL PROJECT INDEX OF DRAWINGS.

13 THE CONTRACTOR IS RESPONSIBLE TO COMPLY WITH ALL APPLICABLE LAWS, CODES, REGULATIONS AND ORDINANCES OF THE PLACE (CITY, COUNTY, DISTRICT, AND STATE) WHERE THE PROJECT IS LOCATED.

14 THE CONTRACTOR SHALL OBTAIN ALL REQUIRED PERMITS (IF REQUIRED) AND SIMILAR RELEASES REQUIRED FOR THE CONSTRUCTION AND OCCUPANCY OF THE PROJECT. THE CONTRACTOR SHALL FURNISH COPIES OF ALL SUCH ITEMS TO THE OWNER AND ARCHITECT WITHIN 10 DAYS OF RECEIPT OF SUCH ITEMS. IF PERMITS ARE ISSUED SUBJECT TO CERTAIN CONDITIONS OR REVISIONS TO THE WORK OR IF PERMITS ARE DELAYED FOR ANY REASON, THE CONTRACTOR SHALL IMMEDIATELY NOTIFY THE OWNER AND ARCHITECT.

15 THE CONTRACTOR SHALL BE SOLELY RESPONSIBLE FOR MEANS, METHODS AND SEQUENCES OF CONSTRUCTION.

16 THE CONTRACTOR SHALL PROMPTLY REMOVE AND PROPERLY DISPOSE OF ALL CONSTRUCTION AND DEMOLITION DEBRIS. THE CONTRACTOR SHALL OBTAIN APPROVAL OF OWNER FOR DETAILS RELATED TO ALL SITE ACCESS AND REMOVAL PLANS

17 CONTRACTOR NOT TO STORE NEW OR REMOVED MECHANICAL UNITS ON BUILDING ROOFTOPS

18 THE CONTRACTOR SHALL BECOME FAMILIAR WITH AND COMPLY WITH OWNER'S PROCEDURES FOR MAINTAINING A SECURE SITE AND BUILDING AS NOTED IN THE OCTA DIVISION 1 SPECIFICATIONS.

19 EACH INSTALLER SHALL EXAMINE THE SUBSTRATE CONDITION AND/OR SITE CONDITIONS WHICH AFFECT THE QUALITY OF EACH PRODUCT TO BE INSTALLED. IF ANY CONDITIONS EXIST WHICH WILL HAVE A DETRIMENTAL EFFECT ON THE QUALITY OF THE INSTALLATION, THE INSTALLER SHALL IMMEDIATELY ADVISE THE CONTRACTOR. INSTALLATION SHALL NOT PROCEED UNTIL THE UNSATISFACTORY CONDITIONS ARE CORRECTED. INSTALLATION OF PRODUCTS SHALL SIGNIFY ACCEPTANCE BY THE INSTALLER OF THE SUBSTRATE CONDITIONS.

20 THE CONTRACTOR SHALL MAINTAIN A CURRENT/UPDATED RECORD OF DRAWINGS ON SITE AT ALL TIMES.

21 CONTRACTOR SHALL PROVIDE TEMPORARY HVAC UNITS WHILE THE PERMANENT MECHANICAL SYSTEMS ARE BEING REPLACED.

22 GC NOT TO PLACE CRANE OVER UNDERGROUND STORAGE TANKS.

23 CONTRACTOR TO COORDINATE WITH OCTA FACILITIES MAINTENANCE, SUBMITTING A LAYDOWN PLAN WITH CRANE LOCATIONS PER THE HSE SPECIFICATION DOCUMENTS. CONTRACTOR TO SUBMIT A CRANE PLAN FOR OCTA HSE DEPARTMENT TO REVIEW AND CERTIFY.

24 PATCH AND REPAIR EXISTING BUILT UP ROOFING SYSTEM AS NEEDED PER MFR REQUIREMENTS WITH A MINIMUM OVERLAP OF 48". SEE ALSO SPEC 07 52 16.

25 CONSTRUCTION SEQUENCE: THE WORK SHALL BE PERFORMED IN TWO PHASES, THE DEMOLITION PHASE, AND THE NEW CONSTRUCTION PHASE. ALL CRANE WORK FOR THE DEMOLITION PHASE INCLUDING REMOVAL OF EXISTING HVAC UNITS SHALL BE COMPLETED ON A NORMAL WORKDAY BETWEEN 7:00AM AND 4:00PM. ALL CRANE WORK FOR THE NEW CONSTRUCTION PHASE INCUDING SETTING THE NEW HVAC SHALL BE COMPLETED ON A SUBSEQUENT NORMAL WORK DAY BETWEEN 7:00AM AND 4:00PM.

26 ALL REMOVED DEMOLISHED EQUIPMENT SHALL BE LEGALLY DISPOSED OFF THE SITE THE SAME DAY OF REMOVAL AT CONTRACTOR'S EXPENSE.

27 CONTRACTOR TO PROVIDE TEMPORARY HVAC UNITS FOR BUILDINGS WHILE THE PERMENANT HVAC FOR THAT BUILDING IS BEING WORKED ON

GRAPHIC SYMBOLS LEGEND

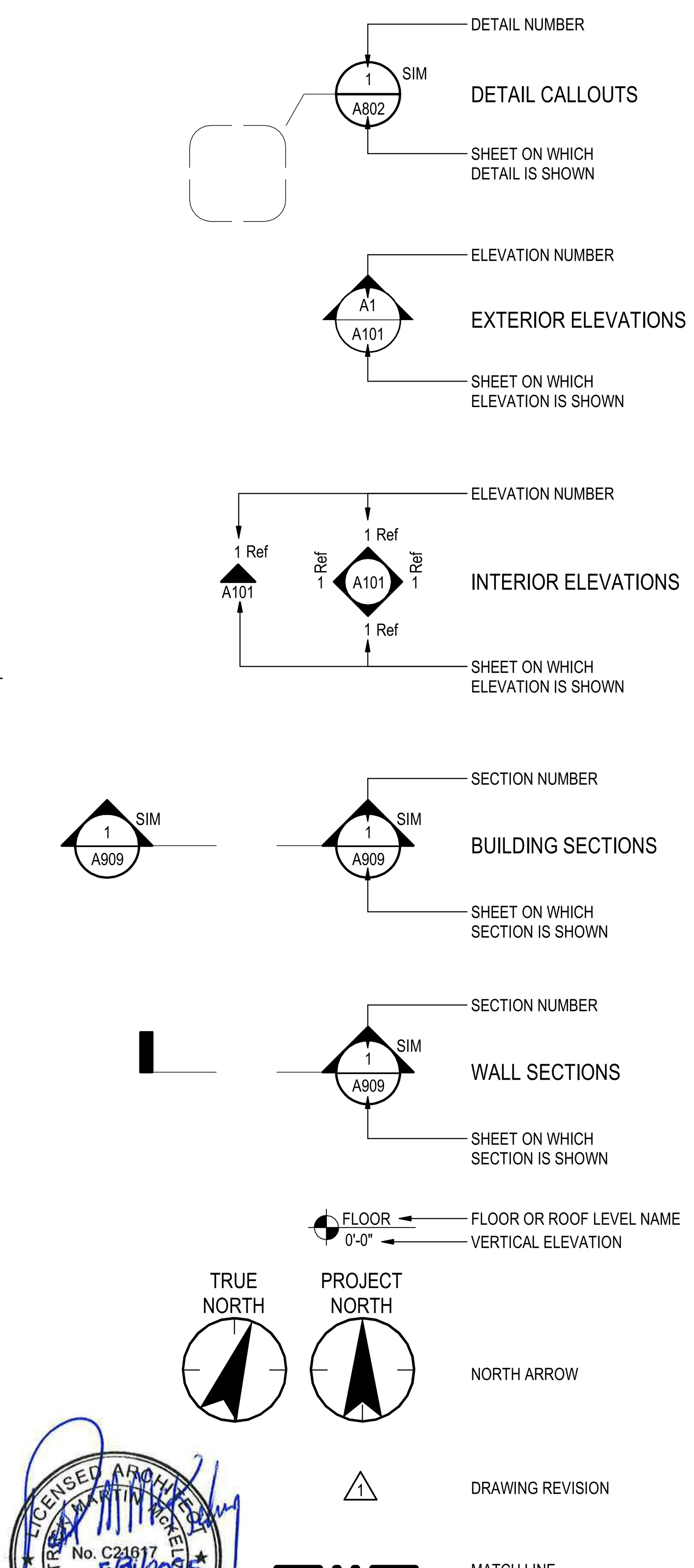

LICENSED ARCHITECT
No. C21617
REN. 5/31/2025
STATE OF CALIFORNIA

Stantec
801 S. Figueroa Street, Suite 300
Los Angeles, CA 90017

Copyright Reserved
The Contractor shall verify and be responsible for all dimensions. DO NOT scale the drawing - any errors or omissions shall be reported to Stantec without delay.
The Copyrights to all designs and drawings are the property of Stantec. Reproduction or use for any purpose other than that authorized by Stantec is forbidden.

REVISION	DESCRIPTION	DATE
5	100% RESUBMITTAL 2	08/19/2024
	100% RESUBMITTAL	5/13/2024
3	100% CONSTRUCTION DRAWING SUBMITTAL	03/18/2024
2	90% UPDATED CONSTRUCTION SUBMITTAL	02/13/2024
1	90% CONSTRUCTION DRAWING SUBMITTAL	12/07/2023

REPLACEMENT OF MECHANICAL UNITS AT SANTA ANA BUS BASE
4301 W MacArthur Blvd, Santa Ana, CA 92704

COVERSHEET

JOB #:	
DESIGN BY:	Designer
DRAWN BY:	Author
CHECKED BY:	Checker
DATE:	
SCALE:	12" = 1'-0"
SHEET:	G-000P

OCTA

ORANGE COUNTY TRANSPORTATION AUTHORITY
550 SOUTH MAIN STREET, ORANGE, CA

IFB 4-2550 EXHIBIT B

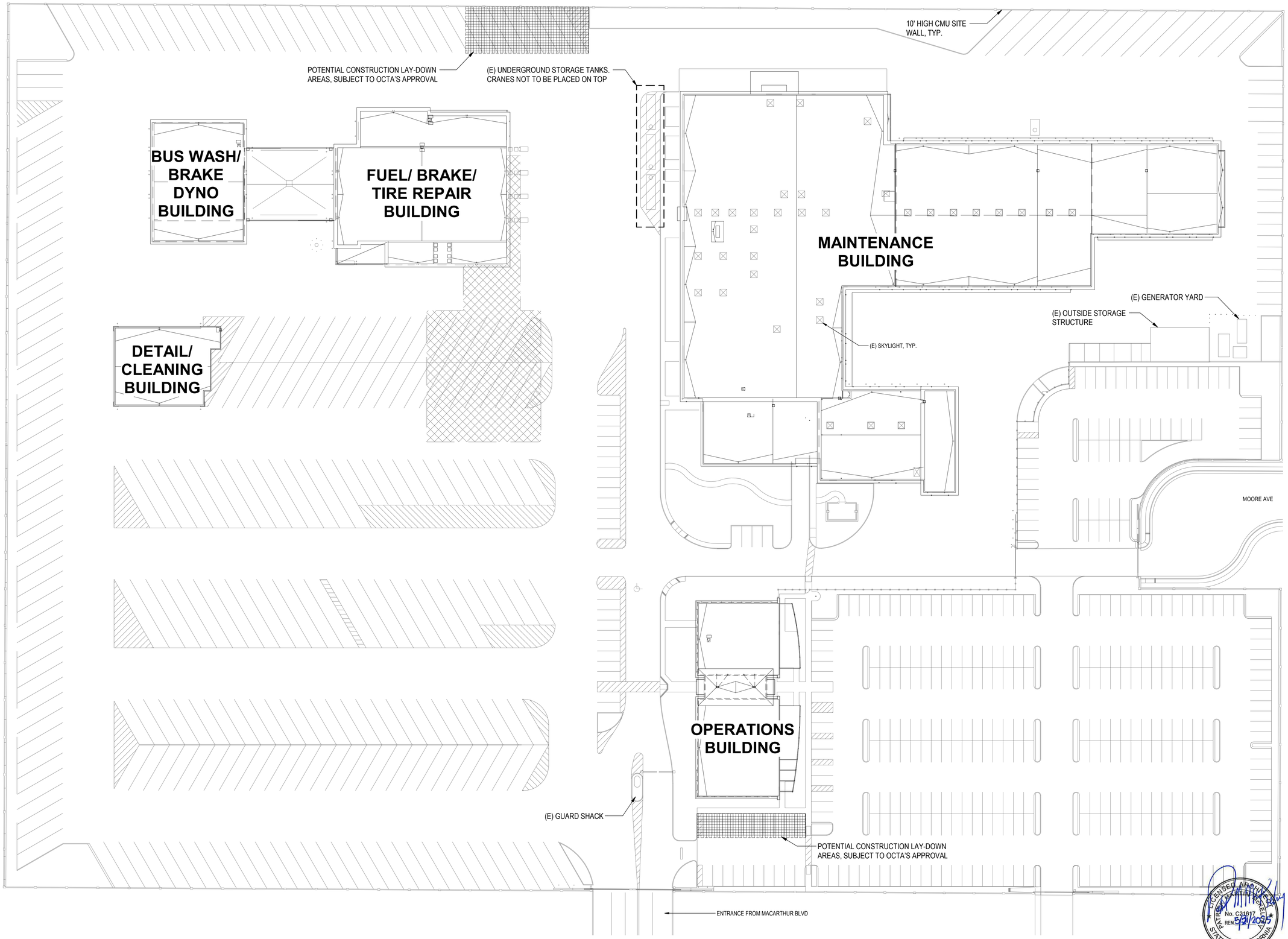

Stantec

801 S. Figueroa Street, Suite 300
Los Angeles, CA 90017

Copyright Reserved
The Contractor shall verify and be responsible for all dimensions. DO NOT scale the drawing - any errors or omissions shall be reported to Stantec without delay.
The Copyright in all designs and drawings are the property of Stantec. Reproduction or use for any purpose other than that authorized by Stantec is forbidden.

REVISION	DESCRIPTION	DATE
	100% RESUBMITTAL	5/13/2024
3	100% CONSTRUCTION DRAWING SUBMITTAL	03/18/2024
2	90% UPDATED CONSTRUCTION SUBMITTAL	02/13/2024
1	90% CONSTRUCTION DRAWING SUBMITTAL	12/07/2023

REPLACEMENT OF MECHANICAL UNITS AT SANTA ANA BUS BASE
4301 W MacArthur Blvd, Santa Ana, CA 92704

OVERALL SITE PLAN

JOB #:	
DESIGN BY:	Designer
DRAWN BY:	Author
CHECKED BY:	Checker
DATE:	
SCALE:	1" = 40'-0"
SHEET:	G-100P

OCTA
ORANGE COUNTY TRANSPORTATION AUTHORITY
550 SOUTH MAIN STREET, ORANGE, CA

LICENSED ARCHITECT
PATRICK MARTIN PACKELL
No. C21617
REN. 5/31/2025
STATE OF CALIFORNIA

Autodesk Docs://2014233703_Santa_Ana_Bus/arch_2014233703-Revit22.rvt

5/9/2024 10:14:27 AM

IFB 4-2550 EXHIBIT B

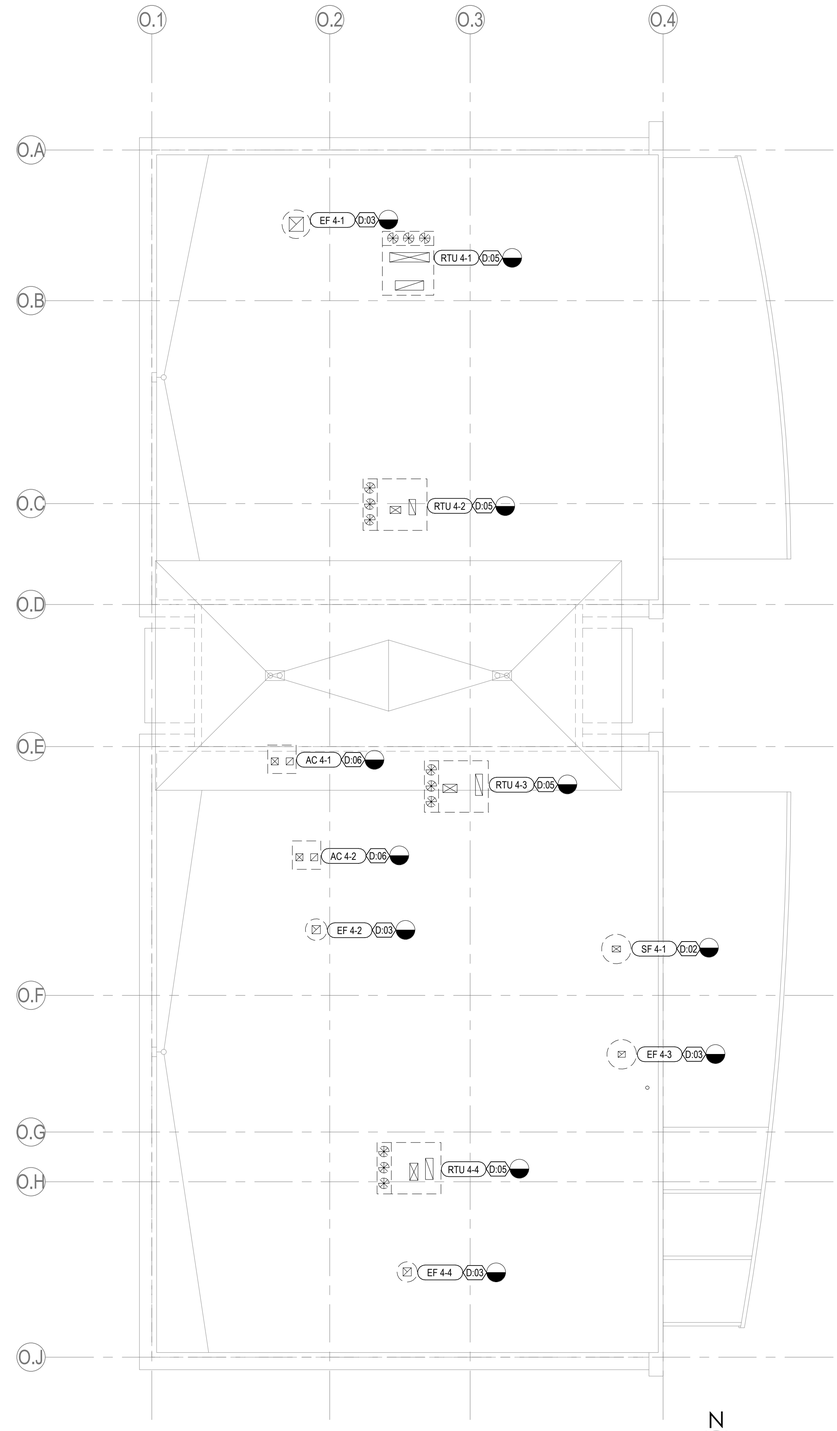

1 MD-200 **OPERATIONS BUILDING MECHANICAL DEMO ROOF PLAN**

3/32" = 1'-0"

N

GENERAL NOTES

1. ALL POWER SUPPLIES TO EXISTING EQUIPMENT TO BE REMOVED SHALL BE ISOLATED AND MADE SAFE PER NEC PRIOR TO DEMOLITION STARTS.
2. THE PIPEWORK AND ASSOCIATED EQUIPMENT TO BE DEMOLISHED SHALL BE REMOVED FROM SITE.
3. NO EQUIPMENT SHALL BE STORED ON THE ROOF.
4. ANY DAMAGE TO EXISTING EQUIPMENT DURING DEMOLITION SHALL BE THE RESPONSIBILITY OF THE CONTRACTOR.
5. ALL PIPEWORK/VALVES IS TO BE REINSULATED TO COMPLY WITH THE SPECIFICATION REQUIREMENTS.
6. CONTRACTOR SHALL REMOVE CONSTRUCTION DEBRIS AND VACUUM CLEAN ALL RETAINED EQUIPMENT (INTERNAL AND EXTERNAL)- PRIOR TO TEST AND BALANCE.

LICENSED PROFESSIONAL ENGINEER
SEVAK GALSTYAN
M-39730
EXP. 12/31/25
MECHANICAL
STATE OF CALIFORNIA

DEMO WORK DEFINITION

EXISTING (E)

REMOVE EXISTING (D)

KEY NOTE

Keynote Legend

Key Value	Keynote Text
D:02	EXISTING SUPPLY FAN TO BE DEMOLISHED.
D:03	EXISTING EXHAUST FAN TO BE DEMOLISHED.
D:05	EXISTING ROOFTOP UNIT TO BE DEMOLISHED.
D:06	EXISTING AIR CONDITIONING UNIT TO BE DEMOLISHED.

Stantec

801 S. Figueroa Street, Suite 300
Los Angeles, CA 90017

Copyright Reserved
The Contractor shall verify and be responsible for all dimensions. DO NOT scale the drawing - use dimensions or enlarge to detail as required by Stantec without delay.
This drawing is the property of Stantec and shall not be reproduced in whole or in part without permission. Reproduction or use for any purpose other than that authorized by Stantec is forbidden.

REVISION	DESCRIPTION	DATE
	100% RESUBMITTAL	5/13/2024
	100% CONSTRUCTION DRAWING SUBMITTAL	3/27/2024
	90% UPDATED CONSTRUCTION SUBMITTAL	2/13/2024
	90% CONSTRUCTION DRAWING SUBMITTAL	12/07/2023

REPLACEMENT OF MECHANICAL UNITS AT SANTA ANA BUS BASE

4301 W. MAC ARTHUR BLVD., SANTA ANA, CA

OPERATIONS BUILDING MECHANICAL DEMO ROOF PLAN

JOB #:	
DESIGN BY:	SG
DRAWN BY:	RW
CHECKED BY:	GY
DATE:	
SCALE:	As indicated
SHEET:	MD-200P

OCTA

ORANGE COUNTY TRANSPORTATION AUTHORITY
550 SOUTH MAIN STREET, ORANGE, CA

Autodesk Docs://2014233703_Santa_Ana_Bus/mech_SantaAnaBus_2014233703.rvt

5/8/2024 11:15:08 AM

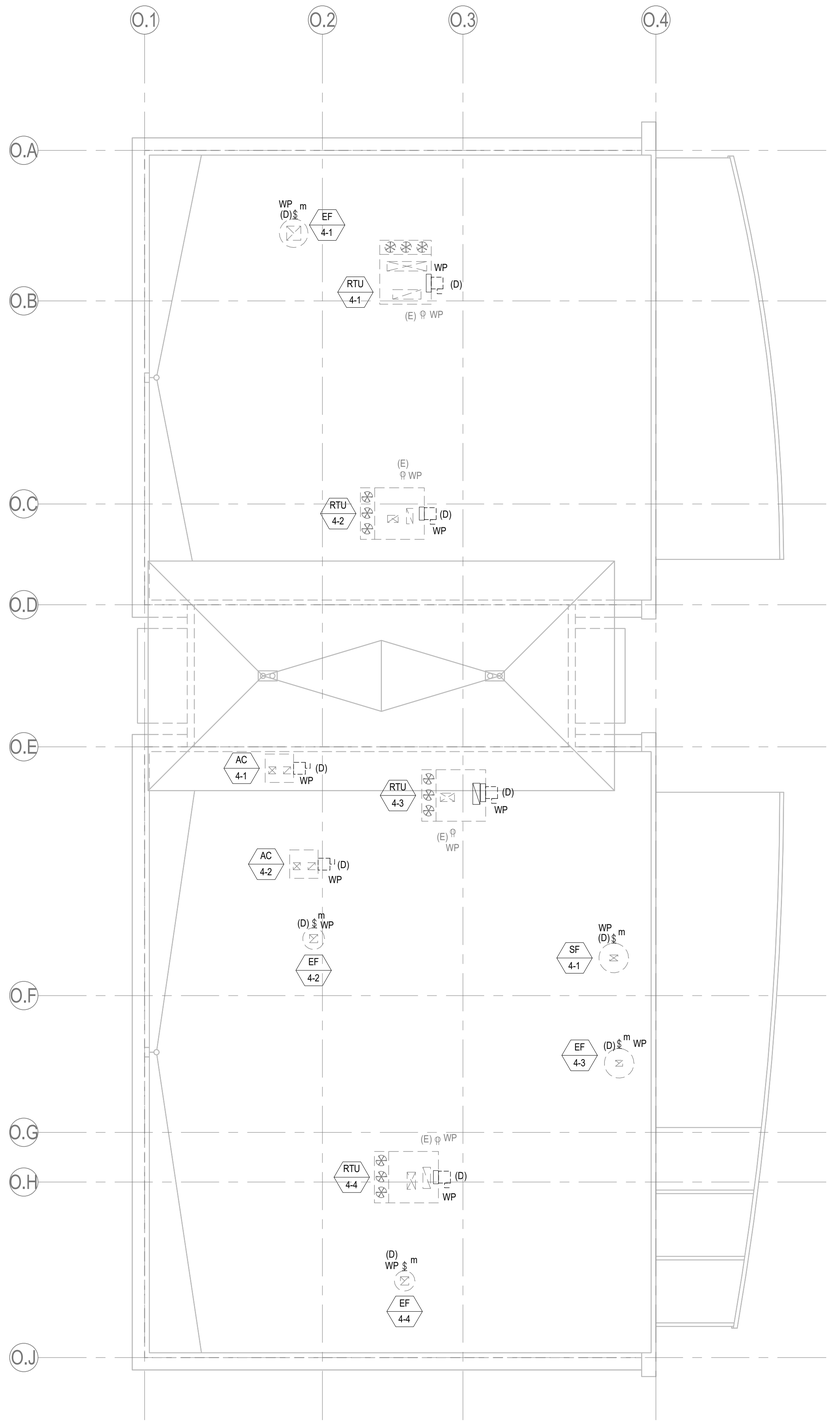

1
ED-210

OPERATIONS BUILDING ELECTRICAL DEMO ROOF PLAN

3/32" = 1'-0"

N

GENERAL NOTES

1. DISCONNECT EXISTING, TO BE REPLACED, MECHANICAL UNITS POWER CONNECTION FROM EXISTING ELECTRICAL PANELS, MOTOR CONTROL CENTERS, DISTRIBUTION PANELS. REMOVE EXISTING DISCONNECT SWITCHES AND EXISTING WIRES USED FOR POWER CONNECTION TO THE EXISTING MECHANICAL UNITS, SALVAGE AND RETURN TO OWNER. PROVIDE NEW DISCONNECTS FOR THE NEW MECHANICAL UNIT POWER CONNECTION. REFER TO E-200 SERIES SHEETS FOR ADDITIONAL INFORMATION.

(E) - EXISTING TO REMAIN, PROTECT IN PLACE.
(D) - EXISTING TO BE DEMOLISHED.
$M - TOGGLE SWITCH, MOTOR RATED.
□ - NON-FUSED SAFETY SWITCH
WP - WEATHER PROOF

PROJECT DEMOLITION NOTES

1. ANY EXISTING WIRING SERVING DEVICES TO REMAIN IN SERVICE, AND WHICH IS INTERRUPTED BY WORK PERFORMED UNDER THIS CONTRACT, SHALL BE REROUTED TO MAINTAIN CIRCUIT CONTINUITY. ALL EXISTING SYSTEMS/DEVICES TO REMAIN. PRIOR TO COMMENCING WITH DEMOLITION, IDENTIFY ALL POWER, LIGHTING, COMMUNICATION, AND SIGNAL CIRCUITS PASSING THROUGH THE DEMOLITION AREA OR EXTENDING BEYOND THE DEMOLITION AREA. COORDINATE WITH DEMOLITION WORK OF OTHER TRADES.

2. THE EXISTING BUILDING MUST BE KEPT IN OPERATION AT ALL TIMES. MAINTAIN ELECTRICAL SERVICES AND SYSTEMS EXCEPT FOR EQUIPMENT BEING REPLACED BY THIS PROJECT. MAINTAIN CONTINUITY OF FIRE ALARM, LIFE SAFETY AND SECURITY SYSTEMS TO ALL OCCUPIED AREAS OF THE BUILDING THROUGHOUT THE CONSTRUCTION PERIOD. PROVIDE TEMPORARY WIRING AND BRANCH CIRCUITING AS NECESSARY TO MAINTAIN OPERATION OF EXISTING CIRCUITS AND SYSTEMS EXTENDING BEYOND REMODEL AREA. ASSUME FULL RESPONSIBILITY FOR ANY DISRUPTION TO EXISTING SERVICES. RECONNECT ANY SERVICES WHICH ARE TO REMAIN, AND WHICH HAVE BEEN DISCONNECTED DURING DEMOLITION OR CONSTRUCTION. ARRANGE WORK IN SUCH A MANNER THAT INTERRUPTIONS IN SERVICES OCCUR ONLY AT PRE-SCHEDULED TIMES. CARRY OUT THE WORK WITH A MINIMUM OF NOISE, DUST AND DISTURBANCE.

3. PERMANENTLY REMOVE ABANDONED ELECTRICAL EQUIPMENT, LIGHTING FIXTURES, ELECTRICAL DEVICES, POWER AND SIGNALLING WIRING DEVICES AND ASSOCIATED WIRE, RACEWAYS, AND/OR JUNCTION BOXES. THE REMOVAL OR RELOCATION OF EXISTING ELECTRICAL EQUIPMENT PRESENTLY CONCEALED IN EXISTING CONSTRUCTION SHALL BE COORDINATED WITH THE OWNER PRIOR TO REMOVAL OR RELOCATION. RACEWAYS AND CONDUCTORS SHALL BE REMOVED BACK TO THE SOURCE OR NEAREST REMAINING JUNCTION BOX OR DEVICE AS FAR AS PRACTICAL, OR WHERE COMPLETE REMOVAL NOT PRACTICAL, RENDERED PERMANENTLY SAFE.

4. ANY EXISTING SYSTEM OUTAGES SHALL BE OF MINIMUM DURATION AND AT A TIME ACCEPTABLE TO THE OWNER, ARRANGED A MINIMUM OF 10 WORKING DAYS IN ADVANCE. LONGER NOTICES AND/OR ADDITIONAL RESTRICTIONS PERTAINING TO OUTAGES MAY BE REQUIRED IN SOME INSTANCES, AS PER SPECIFICATIONS. VERIFY PROTOCOL WITH ALL PROJECT STAKEHOLDERS INCLUDING OWNER, TENANT, CONSTRUCTION MANAGER AND/OR USER GROUP(S) AS APPLICABLE.

5. ELECTRICAL EQUIPMENT, FIXTURES, AND/OR DEVICES SCHEDULED TO REMAIN OR TO BE RELOCATED THAT ARE DAMAGED DURING DEMOLITION SHALL BE REPLACED WITH SIMILAR TYPE AS APPROVED BY THE OWNER, AT NO ADDITIONAL CHARGE TO THE OWNER.

6. IN THE EVENT THAT DEMOLITION WORK AFFECTS THE STRUCTURAL SUPPORT OF EXISTING ELECTRICAL EQUIPMENT THAT IS TO REMAIN IN SERVICE, IT SHALL BE RE-SUPPORTED IN ACCORDANCE WITH ALL APPLICABLE CODES. PROVIDE TEMPORARY SUPPORTS WHERE REQUIRED.

7. UNUSED FLUSH MOUNTED DEVICES, OUTLET AND OTHER BOXES IN FINISHED AREAS SHALL BE REMOVED FROM WALL AND THE REMAINING HOLE PATCHED TO MATCH ADJACENT WALL SURFACES. UNUSED RACEWAYS AND SLEEVES SHALL BE CUT FLUSH AT CEILING, FLOOR OR WALL AND FILLED WITH GROUT OR REQUIRED FIRE SEALANT. UNUSED RACEWAYS ABOVE ACCESSIBLE CEILINGS SHALL BE REMOVED.

8. ELECTRICAL MATERIAL SCHEDULED FOR REMOVAL IS TO BE REMOVED FROM THE SITE AND PROPERLY DISPOSED OF AS PART OF THIS CONTRACT. ANY ELECTRICAL MATERIAL THE OWNER WISHES TO RETAIN TO BECOME THE PROPERTY OF THE OWNER AND TO BE REMOVED AND PLACED AT A LOCATION ON THE SITE AS DIRECTED BY THE OWNER.

9. THE DEMOLITION DRAWINGS SHOW THE GENERAL SCOPE OF THE DEMOLITION AND NOT EXACT DETAILS OR TOTAL EXTENT. FOR EXACT DETAILS AND TOTAL EXTENT, EACH SERVICE MUST BE CAREFULLY CHECKED ON SITE. BEFORE REMOVING SERVICES FOLLOW THE SERVICE THROUGH TO ENSURE OTHER AREAS OF THE BUILDING ARE NOT AFFECTED.

REGISTERED PROFESSIONAL ENGINEER
PAUL K. ERLSON
No. 11219
exp. 06/30/2025
ELECTRICAL
STATE OF CALIFORNIA

05-13-2024

Stantec
801 S. Figueroa Street, Suite 300
Los Angeles, CA 90017

Copyright Reserved
The contractor shall verify and be responsible for all dimensions. DO NOT scale the drawing - any discrepancies shall be reported to Stantec without delay.
This drawing is the property of Stantec and shall not be reproduced or used for other purposes than that authorized by Stantec in writing.

REVISION	DESCRIPTION	DATE
3	100% RESUBMITTAL	05/13/2024
2	100% CONSTRUCTION DRAWING SUBMITTAL	03/27/2024
1	90% UPDATED CONSTRUCTION SUBMITTAL	02/13/2024

REPLACEMENT OF MECHANICAL UNITS AT SANTA ANA BUS BASE
4301 W. MAC ARTHUR BLVD., SANTA ANA, CA

OPERATIONS BUILDING ELECTRICAL DEMO ROOF PLAN

JOB #:	
DESIGN BY:	IZ
DRAWN BY:	ERL
CHECKED BY:	PKE
DATE:	02/13/2024
SCALE:	As indicated
SHEET:	ED-210P

OCTA
ORANGE COUNTY TRANSPORTATION AUTHORITY
550 SOUTH MAIN STREET, ORANGE, CA

SPECIAL INSPECTION AND TEST REQUIREMENTS

TYPE	FREQUENCY	REQUIRED INSPECTIONS AND/OR TESTS	REFERENCES CODES/STANDARDS
NONSTRUCTURAL COMPONENTS			
1. PLUMBING, MECHANICAL, AND ELECTRICAL COMPONENTS	☑ PERIODIC	INSTALLATION OF MECHANICAL AND ELECTRICAL EQUIPMENT, INCLUDING DUCTWORK, PIPING SYSTEMS AND THEIR STRUCTURAL SUPPORTS, WHERE AUTOMATIC FIRE SPRINKLER SYSTEMS ARE INSTALLED TO VERIFY ONE OF THE FOLLOWING REQUIREMENTS (SDC C,D,E,F): • MINIMUM CLEARANCES HAVE BEEN PROVIDED AS REQUIRED BY ASCE-7 SECTION 13.2.3 • A NOMINAL CLEARANCE OF NOT LESS THAN 3 INCHES HAS BEEN PROVIDED BETWEEN FIRE PROTECTION SPRIKLER SYSTEM DROPS AND SPRIGS AND: STRUCTURAL MEMBERS NOT USED COLLECTIVELY OR INDEPENDENTLY TO SUPPORT THE SPRINKERS; EQUIPMENT ATTACHED TO THE BUILDING STRUCTURE; AND OTHER SYSTEMS' PIPING	CBC 1705.12.6
	☑ PERIODIC	DESIGNATED SEISMIC SYSTEMS - EXAMINE DESIGNATED SEISMIC SYSTEMS REQUIRING SEISMIC QUALIFICATION IN ACCORDANCE WITH ASCE 7 SECTION 13.2.2 AND VERIFY THAT THE LABEL, ANCHORAGE AND MOUNTING CONFORM TO THE CERTIFICATE OF COMPLIANCE (SDC C,D,E,F): • ACTIVE MECHANICAL AND ELECTRICAL EQUIPMENT THAT MUST REMAIN OPERABLE FOLLOWING THE DESIGN EARTHQUAKE GROUND MOTION • COMPONENTS WITH HAZARDOUS SUBSTANCES AND ASSIGNED A COMPONENT IMPORTANCE FACTOR, I_p OF 1.5.	CBC 1705.12.4

STATEMENT OF SPECIAL INSPECTIONS

INSPECTION AND TESTING REQUIREMENTS ON THIS SHEET ARE IN ACCORDANCE WITH SECTION 1705 OF THE CALIFORNIA BUILDING CODE (CBC) AND HAVE BEEN IDENTIFIED AS A STATEMENT OF SPECIAL INSPECTIONS AS REQUIRED BY CBC SECTION 1704.3. THE OWNER OF THE OWNER'S AUTHORIZED AGENT, OTHER THAN THE CONTRACTOR, SHALL EMPLOY ONE OR MORE APPROVED AGENCIES TO PROVIDE THE SPECIAL INSPECTIONS AND TESTS DURING CONSTRUCTION AS REQUIRED BY CBC SECTION 1705 AND IDENTIFY THE APPROVED AGENCIES TO THE BUILDING OFFICIAL. THESE SPECIAL INSPECTIONS AND TESTS ARE IN ADDITION TO THE INSPECTIONS BY THE BUILDING OFFICIAL THAT ARE IDENTIFIED IN CBC SECTION 110. SPECIAL INSPECTORS SHALL BE QUALIFIED IN ACCORDANCE WITH CBC SECTION 1704.2.1, AND ALL OTHER APPLICABLE SECTIONS AND STANDARDS.

DEFINITIONS

SPECIAL INSPECTION	INSPECTION OF CONSTRUCTION REQUIRING THE EXPERTISE OF AN APPROVED SPECIAL INSPECTOR IN ORDER TO ENSURE COMPLIANCE WITH THE BUILDING CODE AND THE APPROVED CONSTRUCTION DOCUMENTS.
SPECIAL INSPECTOR	A QUALIFIED PERSON EMPLOYED OR RETAINED BY AN APPROVED AGENCY AND APPROVED BY THE BUILDING OFFICIAL AS HAVING THE COMPETENCE NECESSARY TO INSPECT A PARTICULAR TYPE OF CONSTRUCTION REQUIRING SPECIAL INSPECTION.
PERIODIC	SPECIAL INSPECTION BY THE SPECIAL INSPECTOR WHO IS INTERMITTENTLY PRESENT WHERE THE WORK HAS BEEN OR IS BEING PERFORMED AND AT THE COMPLETION OF WORK.
CONTINUOUS	SPECIAL INSPECTION BY THE SPECIAL INSPECTOR WHO IS PRESENT CONTINUOUSLY WHEN AND WHERE THE WORK TO BE INSPECTED IS BEING PERFORMED
☑	INDICATES SPECIAL INSPECTION OF ITEM MAY BE REQUIRED FOR THE WORK DEFINED IN THE CONSTRUCTION DOCUMENTS FOR THIS PROJECT.

GENERAL NOTES

VI. STRUCTURAL LUMBER

1. ALL STRUCTURAL SAWN LUMBER SHALL BE DOUGLAS FIR LARCH AS GRADED BY THE WWPA OR WCLIB WITH THE FOLLOWING MINIMUM GRADES, UNLESS NOTED OTHERWISE:
   A. 4X AND LARGER BEAMS OR JOISTS, CONCEALED: NO. 1
   B. 4X AND LARGER BEAMS OR JOISTS, EXPOSED: SELECT STRUCTURAL
2. ALL STRUCTURAL COMPOSITE LUMBER (SCL) OR ENGINEERED LUMBER SHALL BE AS FOLLOWS:
   A. I-JOISTS: TJI JOISTS MANUFACTURED BY WEYERHAUSER (ESR-1153)
   B. LSL: TIMBERSTRAND LSL MANUFACTURED BY WEYERHAUSER (ESR-1387)
   C. LVL: MICROLLAM LVL (2.0E) MANUFACTURED BY WEYERHAUSER (ESR-1387)
   D. PSL: PARALLAM PSL (2.0E) MANUFACTURED BY WEYERHAUSER (ESR-1387)
   E. SUBSTITUTION OF PRODUCTS LISTED ABOVE SHALL BE SUBMITTED TO ENGINEER FOR REVIEW AND APPROVAL.
3. ALL STRUCTURAL TIMBER FRAMING SHALL HAVE A MAXIMUM MOISTURE CONTENT OF 19% AT THE TIME OF ENCLOSURE, REGARDLESS OF THE MOISTURE CONTENT AT THE TIME OF MANUFACTURE. TIMBER FLOOR FRAMING, INCLUDING JOISTS AND BEAMS, WITH MORE THAN 2 FRAMED LEVELS ABOVE THEM SHALL BE DESIGNATED AS 'S-DRY' OR 'MC15' AND HAVE A MAXIMUM MOISTURE CONTENT OF 15% AT THE TIME OF ENCLOSURE.
4. ALL LUMBER LOCATED IN DIRECT CONTACT WITH CONCRETE OR MASONRY INCLUDING BUT NOT LIMITED TO SILL PLATES, NAILERS, AND LEDGERS SHALL BE PRESSURE TREATED DOUGLAS FIR.
5. ALL HARDWARE SHALL BE SIMPSON STRONG-TIE CO INSTALLED PER MANUFACTURERS RECOMMENDATIONS. SUBSTITUTION OF EQUIVALENT HARDWARE FROM AN ALTERNATE MANUFACTURER SHALL BE SUBMITTED TO THE ENGINEER FOR REVIEW AND APPROVAL.
6. MINIMUM FASTENING AND NAILING OF TIMBER COMPONENTS SHALL BE IN ACCORDANCE WITH CBC TABLE 2304.10.1.
7. FASTENERS SHALL BE PROVIDED NEW AND WITHOUT EXCESSIVE RUST. ALL FASTENERS EXPOSED TO WEATHER SHALL BE GALVANIZED.
8. ALL METAL FASTENERS IN CONTACT WITH PRESERVATIVE-TREATED LUMBER SHALL BE STAINLESS STEEL OR OTHERWISE CERTIFIED BY THE MANUFACTURER TO RESIST CORROSION CAUSED BY THE SPECIFIC TREATMENT APPLIED TO THE WOOD.
9. DO NOT CUT, BORE, COUNTERSINK OR NOTCH WOOD MEMBERS EXCEPT WHERE EXPLICITY SHOWN IN THE DETAILS.
10. BOLTS AND LAG SCREWS:
    A. BOLTS AND LAG SCREWS SHALL CONFORM TO ASTM A307 AND MEET THE DIMENSIONAL STANDARDS OF ANSI/ASME B18.2.1.
    B. HOLES FOR BOLTS SHALL BE A MINIMUM 1/32" TO A MAXIMUM OF 1/16" LARGER THAN THE BOLT DIAMETER.
    C. BOLTS SHALL BE ACCURATELY ALIGNED IN MAIN MEMBERS AND SIDE PLATES. BOLTS SHALL NOT BE FORCIBLY DRIVEN INTO PLACE.
    D. BORED LEAD HOLES FOR LAG SCREWS SHALL BE 40-70% OF THE SHANK DIAMETER AT THE THREADED PORTION OF THE SCREW, AND THE SAME DIAMETER AS THE SHANK AT THE SHANK.
    E. LAG SCREWS SHALL BE TURNED, NOT DRIVEN INTO PLACE.
    F. ALL BOLTS, NUTS, AND LAG SCREWS SHALL BE PROVIDED WITH FLAT OR MALLEABLE WASHERS WHERE BEARING AGAINST DIRECTLY AGAINST WOOD.
    G. ALL BOLTS AND LAG SCREWS SHALL BE TIGHTENED UPON INSTALLATION AND RE-TIGHTENED BEFORE CLOSING IN OR AT COMPLETION OF JOB.

VII. STRUCTURAL STEEL:

1. STRUCTURAL STEEL SHALL BE DETAILED, FABRICATED AND ERECTED IN ACCORDANCE WITH AISC 360.
2. UNLESS OTHERWISE NOTED, ALL STRUCTURAL STEEL SHALL CONFORM TO THE FOLLOWING:
   A. ANGLES AND CHANNELS: ASTM A36 (FY = 36 KSI)
   B. PLATES, BARS: ASTM A36 (FY = 36 KSI)
3. FIELD CUTTING OR DRILLING STRUCTURAL STEEL IS STRICTLY PROHIBITED WITHOUT PRIOR REVIEW AND APPROVAL BY SEOR. ALL HOLES AND CUTS SHALL BE PERFORMED IN THE SHOP AS IDENTIFIED ON STRUCTURAL DRAWINGS OR SHOP DRAWINGS.
4. WELDED CONNECTIONS:
   A. ALL WELDS SHALL CONFORM TO AWS D1.1. WELDING ELECTRODES SHALL BE CLASS E70XX.
   B. MINIMUM FILLET WELD SIZE SHALL BE 1/4 " UNLESS NOTED OTHERWISE.
   C. WELDING SHALL BE PERFORMED BY QUALIFIED WELDERS, REFER TO SPECIFICATIONS.
   D. WHERE FIELD WELDING IS SPECIFICALLY NOTED, THE DESIGNATION IS GIVEN AS A SUGGESTED CONSTRUCTION PROCEDURE ONLY. THE CONTRACTOR SHALL DETERMINE SUITABILITY OF SHOP OR FIELD WELDING FOR ALL CONDITIONS. ALL BOLTED CONNECTIONS MUST BE IN ADDITION TO THESE REQUIREMENTS.
   E. WELD LENGTHS SPECIFIED ON PLANS ARE THE NET EFFECTIVE LENGTH. WELD SIZE SHALL BE AISC MINIMUM UON AS LARGER WELD.
   F. ALL CJP WELDS SHALL BE MADE WITH FILLER METAL WITH A MINIMUM CVN TOUGHNESS OF 20 FT-LBS AT -20 DEGREES F. NDT AND INSPECTIONS PER THE 'STRUCTURAL TESTING AND INSPECTIONS' SHEET.
   G. CONTRACTOR TO PROVIDE WELDING PROCEDURE SPECIFICATION FOR REVIEW AND APPROVAL BY SEOR.
5. STEEL FINISHES SHALL BE AS FOLLOWS, UNLESS NOTED OTHERWISE IN ARCHITECTURAL SPECIFICATIONS:
   A. INTERIOR TO RECEIVE ENCASEMENT OR SPRAY-ON FIREPROOFING: NONE
   B. INTERIOR TO RECEIVE FINISH PAINT: REFER TO SPECIFICATIONS
   C. EXTERIOR: HOT-DIPPED GALVANIZED COATING CONFORMING TO ASTM A123 OR HIGH-PERFORMANCE COATING AT CONDITIONS AS IDENTIFIED IN SPECIFICATIONS.
6. SCREWS SHALL BE SELF-TAPPING AND COMPLY WITH ASTM C1513.

I. GENERAL NOTES:

1. ALL STRUCTURAL WORK SHALL CONFORM TO THE DRAWINGS, THE PROJECT SPECIFICATIONS, ALL DRAWING NOTES, AND THE 2022 CALIFORNIA BUILDING CODE (CBC).
2. ALL APPLICABLE REFERENCE STANDARDS, AS MODIFIED BY THE BUILDING CODE, INCLUDE:
   A. ASCE/SEI 7-16: MINIMUM DESIGN LOADS FOR BUILDINGS AND OTHER STRUCTURES
   B. AWS D1.1: STRUCTURAL WELDING CODE - STEEL
3. THE SCOPE OF WORK IS NOT SOLELY DEFINED BY THESE DOCUMENTS.
4. TYPICAL DETAILS APPLY THROUGHOUT THE PROJECT, EVEN IF NOT SPECIFICALLY REFERENCED IN PLANS OR DETAILS. DETAILS OF CONSTRUCTION NOT FULLY SHOWN OR NOTED ON THE DRAWINGS NOR CALLED OUT IN THE SPECIFICATIONS SHALL BE OF THE SAME SIZE AND CHARACTER AS FOR SIMILAR CONDITIONS WHICH ARE SHOWN AND NOTED.
5. ALL FORCES INDICATED IN THE STRUCTURAL DRAWINGS ARE SERVICE LOADS AS DEFINED BY ASCE-7, UNLESS NOTED OTHERWISE.
6. DO NOT USE SCALED DIMENSIONS; USE ONLY WRITTEN DIMENSIONS. WHERE NO DIMENSION IS PROVIDED, CONSULT THE ARCHITECT FOR CLARIFICATIONS BEFORE PROCEEDING WITH WORK.
7. THE CONTRACTOR SHALL BE SOLELY RESPONSIBLE FOR THE CONDITIONS OF THE JOB SITE INCLUDING SAFETY OF PERSONS AND PROPERTY AND THE MEANS AND METHODS OF CONSTRUCTION.
8. ALL STRUCTURAL WORK SHALL BE COORDINATED WITH ARCHITECTURAL, MECHANICAL, ELECTRICAL, PLUMBING, ETC. REQUIREMENTS. REFER TO ARCHITECTURAL DRAWINGS FOR DIMENSIONS NOT SHOWN ON PLAN. DISCREPANCIES AND/OR INTERFERENCES SHALL BE REPORTED TO THE ARCHITECT IMMEDIATELY.
9. OPENINGS SHALL NOT BE MADE IN ANY STRUCTURAL MEMBER UNLESS SPECIFICALLY SHOWN ON THE STRUCTURAL DRAWINGS OR APPROVED BY THE STRUCTURAL ENGINEER.
10. DEFICIENT WORK AND WORK NOT IN CONFORMANCE WITH THE CONTRACT DOCUMENTS AS IDENTIFIED BY THE ARCHITECT OR INSPECTOR SHALL BE REPAIRED AT THE CONTRACTOR'S EXPENSE. CONTRACTOR SHALL COMPENSATE OWNER FOR SERVICES ARISING FROM DEFICIENT WORK.
11. CONSTRUCTION MATERIALS SHALL BE SPREAD OUT WHEN PLACED ON FRAMED FLOORS OR ROOFS. THE CONSTRUCTION MATERIAL LOAD SHALL NOT EXCEED THE DESIGN LIVE LOAD PER SQUARE FOOT. CONTRACTOR SHALL BE RESPONSIBLE FOR SHORING WHERE STRUCTURE IS NOT COMPLETE OR HAS NOT ATTAINED DESIGN STRENGTH.

II. DESIGN LOADS:

1. WIND LOAD:
   A. ULTIMATE DESIGN BASIC WIND SPEED Vult — 95 MPH
   B. WIND EXPSOURE CATEGORY: — C
   C. INTERNAL PRESSURE COEFFICIENT (GCPi): — +/- 0.18
   D. GUST EFFECT FACTOR (G): — 0.85
2. SEISMIC LOAD:
   A. SITE CLASS: — D (DEFAULT)
   B. RISK CATEGORY: — II
   C. SEISMIC IMPORTANCE FACTOR (I_p): — 1.00
   D. MAPPED SPECTRAL RESPONSE:
      a. SHORT PERIOD S_S: — 1.32g
      b. 1-SECOND PERIOD S_1: — 0.48 g
   E. DESIGN SPECTRAL RESPONSE (5% DAMPED):
      a. SHORT PERIOD S_{DS}: — 1.06 g
   F. SEISMIC DESIGN CATEGORY: — D

III. EXISTING STRUCTURE & EXISTING CONDITIONS

1. CONTRACTOR IS TO NOTIFY ENGINEER OF QUESTIONABLE EXISTING STRUCTURAL COMPONENTS (MASONRY WALLS, STEEL BEAMS & LINTEL, EXPOSED FOUNDATIONS, ETC.) AND FRAMING CONNECTIONS WHEN ENCOUNTERED.
2. CONTRACTOR TO VERIFY EXACT LOCATION OF ALL EXISTING STRUCTURAL COMPONENTS THAT WILL BE CONNECTED TO NEW FRAMING PRIOR TO STEEL FABRICATION. IT IS THE CONTRACTOR'S RESPONSIBILITY TO VERIFY ALL EXISTING DIMENSIONS AND COORDINATE THESE DIMENSIONS WITH THE STEEL FABRICATOR PRIOR TO STEEL FABRICATION TO ENSURE ARCHITECTURAL AND STRUCTURAL DESIGN CONCEPT. CONTRACTOR SHALL NOTIFY ARCHITECT AND/OR ENGINEER OF DISCREPANCIES.

IV. MECHANICAL/ELECTRICAL/PLUMBING SYSTEM SUPPORTS

1. THE CONTRACTOR SHALL DESIGN AND SUPPLY ALL ADDITIONAL MISCELLANEOUS METALS AND SYSTEM SUPPORT COMPONENTS THAT ARE NECESSARY TO SUPPORT ALL MECHANICAL, ELECTRICAL (TELECOM, AUDIO VISUAL, ETC.) AND PLUMBING/FIRE PROTECTION SYSTEMS. SUCH METALS AND SUPPORT COMPONENTS AND THEIR CONNECTIONS SHALL BE PROVIDED AS NECESSARY TO DIRECTLY AND CONCENTRICALLY IMPOSE LOADS ON THE PRIMARY STRUCTURE. STEEL ROOF DECK SHALL NOT DIRECTLY SUPPORT THESE SYSTEMS. THE CONNECTIONS TO THE PRIMARY STRUCTURE ARE SUBJECT TO THE REQUIREMENTS OF THE MISCELLANEOUS METALS SECTION ABOVE.

V. QUALITY ASSURANCE AND SPECIAL INSPECTIONS

1. OWNER WILL ENGAGE AN INDEPENDENT TESTING AGENCY TO PERFORM THE TESTS AND INSPECTIONS SHOWN ON THE 'STRUCTURAL TESTING AND INSPECTIONS' SHEET. IT IS THE CONTRACTOR'S RESPONSIBILITY TO PROVIDE ADEQUATE PRIOR NOTICE TO ALLOW FOR COMPLETION OF THESE REQUIREMENTS.

ABBREVIATIONS

#	POUND
&	AND
(N)	NEW
@	AT
AB	ANCHOR BOLT
ACS	ALL COMMON SIDES
ADDL	ADDITIONAL
AESS	ARCHITECTURALLY EXPOSED STRUCTURAL STEEL
ALT	ALTERNATE
ARCH, ARCH'L	ARCHITECT, ARCHITECTURAL
BL	BRICKLEDGE
BLDG	BUILDING
BLKG	BLOCKING
BM	BEAM
BN	BOUNDARY NAILING
BO	BOTTOM OF
BOB	BOTTOM OF BEAM
BOD	BOTTOM OF DECK
BOS	BOTTOM OF STEEL
BOT, BOTT	BOTTOM
BP	BASE PLATE
BRBF	BUCKLING RESTRAINED BRACED FRAME
BRG	BEARING
BTWN	BETWEEN
C	CHANNEL
CB	CONCRETE BEAM
CC	CARRIED COLUMN
CEN	CENTER
CFMF	COLD-FORMED METAL FRAMING
CIP	CAST IN PLACE
CJ	CONTROL JOINT
CJP	COMPLETE JOINT PENETRATION
CL	CENTERLINE
CLR	CLEAR
CMU	CONCRETE MASONRY UNIT
COL	COLUMN
CONC	CONCRETE
CONN	CONNECT, CONNECTION
CONT	CONTINUOUS
CTR	CENTERED
CWI	CERTIFIED WELDING INSPECTOR
D, DIA	DIAMETER
DBA	DEFORMED BAR ANCHOR
DBL	DOUBLE
DEF	DEFORMED, DEFINITION
DEFL	DEFLECTION
DET, DTL	DETAIL
DIAG	DIAGONAL
DN	DOWN
DWG	DRAWING
EA	EACH
EF	EACH FACE
EJ	EXPANSION JOINT
EL	ELEVATION
ELEV	ELEVATOR
EN	EDGE NAILING
EOR	ENGINEER OF RECORD
EOS	EDGE OF SLAB
EQ	EQUAL
EQ SPA	EQUAL SPACE
ES	EACH SIDE
EW	EACH WAY
EXIST, (E)	EXISTING
EXT	EXTERIOR
FD	FLOOR DRAIN
FDN, FNDN	FOUNDATION
FF EL	FINISH FLOOR ELEVATION
FN	FIELD NAILING
FOA	FACE OF ANGLE
FOC	FACE OF CONCRETE
FOM	FACE OF MASONRY
FT	FEET
FTG	FOOTING
Fy	YIELD STRESS
GA	GAGE, GAUGE
GALV	GALVANIZED
GB	GRADE BEAM
GLB	GLUED-LAMINATED BEAM
GT	GIRDER TRUSS
H, HORIZ	HORIZONTAL
HC	HOLLOW CORE
HI	HIGH
HK	HOOK
HSS	HOLLOW STRUCTURAL STEEL
IN	INCHES
INFO	INFORMATION
INT	INTERIOR
JST	JOIST
JT	JOINT
K	KIPS
KB	KNEE BRACE
L	ANGLE
LB	POUND
LF	LINEAR FOOT
LG	LENGTH
LLBB	LONG LEG BACK TO BACK
LLH	LONG LEG HORIZONTAL
LLV	LONG LEG VERTICAL
LO	LOW
LT WT	LIGHTWEIGHT
LVL	LEVEL
LWC	LIGHT WEIGHT CONCRETE
MAX	MAXIMUM
MC	MOMENT CONNECTION
MCJ	MASONRY CONTROL JOINT
MECH	MECHANICAL
MEP	MECHANICAL, ELECTRICAL & PLUMBING
MEZZ	MEZZANINE
MFR, MANUF	MANUFACTURER
MID	MIDDLE
MIL	MILLIMETER
MIN	MINIMUM
MISC	MISCELLANEOUS
MO	MASONRY OPENING
MTL	METAL
N	NORTH
NA	NOT APPLICABLE
NDT	NON-DESTRUCTIVE TESTING
NIC	NOT IN CONTRACT
NTS	NOT TO SCALE
OC	ON CENTER
OH	OPPOSITE HAND
OPNG	OPENING
OPP	OPPOSITE
OWJ	OPEN WEB JOIST
PAF	POWER ACTUATED FASTENERS
PERP	PERPENDICULAR
PJP	PARTIAL JOINT PENETRATION
PL	PLATE
PLF	POUNDS PER LINEAR FOOT
PLYWD	PLYWOOD
PSF	POUNDS PER SQUARE FOOT
PSI	POUNDS PER SQUARE INCH
R	RADIUS
REF	REFER, REFERENCE
REINF	REINFORCED, REINFORCEMENT
REM	REMAINDER
REQ'D	REQUIRED
REQ'MT S, REQMTS	REQUIREMENTS
REV	REVISION
SAD	SEE ARCHITECTURAL DRAWINGS
SC	SLIP CRITICAL
SCHED	SCHEDULE
SECT	SECTION
SF	SQUARE FEET
SHT	SHEET
SHTG	SHEATHING
SIM	SIMILAR
SMD	SEE MECHANICAL DRAWINGS
SMS	SHEET METAL SCREW
SOG	SLAB ON GRADE
SPA	SPACES, SPACING
SQ	SQUARE
SSH	SHORT SLOTTED HOLE
STD	STANDARD
STL	STEEL
STRUCT	STRUCTURE, STRUCTURAL
SUPP	SUPPORT
T&B	TOP AND BOTTOM
TEMP	TEMPORARY
THK	THICK
TO	TOP OF
TOC	TOP OF CONCRETE
TOF	TOP OF FOUNDATION
TOM	TOP OF MASONRY
TOS	TOP OF STEEL
TOSC	TOP OF STRUCTURAL CONCRETE
TOSL	TOP OF SLAB
TOT	TOTAL
TOW	TOP OF WALL
TYP	TYPICAL
UON	UNLESS OTHERWISE NOTED
V, VERT	VERTICAL
VIF	VERIFY IN FIELD
W	WIDE FLANGE
W/	WITH
W/O	WITHOUT
WB	WIND BRACE
WBBP	WIND BRACE BASEPLATE
WHSS	WELDED HEADED STEEL STUD
WP	WORKING POINT, WORK POINT
WRT	WITH RESPECT TO
WT	WEIGHT
WWF	WELDED-WIRE FABRIC
YD	YARD

REGISTERED PROFESSIONAL ENGINEER ALAN W. DIAZ 5470 EXP. 09-30-24 STRUCTURAL STATE OF CALIFORNIA

03-22-24

Stantec
801 S. Figueroa Street, Suite 300
Los Angeles, CA 90017

Copyright Reserved
The Contractor shall verify and be responsible for all dimensions. DO NOT scale the drawing - any errors or omissions shall be reported to Stantec without delay.
The copyrights to all designs and drawings are the property of Stantec. Reproduction or use for any purpose other than that authorized by Stantec is forbidden.

REVISION	DESCRIPTION	DATE
5/13/2024	100% RESUBMITTAL	
03/27/2024	100% CONSTRUCTION DRAWING SUBMITTAL	
02/13/2024	UPDATED 90% CONSTRUCTION DRAWING SUBMITTAL	
12/07/2023	90% CONSTRUCTION DRAWING SUBMITTAL	

REPLACEMENT OF MECHANICAL UNITS AT SANTA ANA BUS BASE
4301 W. MAC ARTHUR BLVD., SANTA ANA, CA

GENERAL NOTES

JOB #:	
DESIGN BY:	IS
DRAWN BY:	DK
CHECKED BY:	MP
DATE:	12/07/2023
SCALE:	3/4" = 1'-0"
SHEET:	S-100P

OCTA
ORANGE COUNTY TRANSPORTATION AUTHORITY
550 SOUTH MAIN STREET, ORANGE, CA

Autodesk Docs://2014233703_Santa_Ana_Bus/stn_struc_2014233703_Santa_Ana_Bus_OCTA_CTO-3_Mech_Units.rvt
3/22/2024 10:38:08 AM

IFB 4-2550 EXHIBIT B

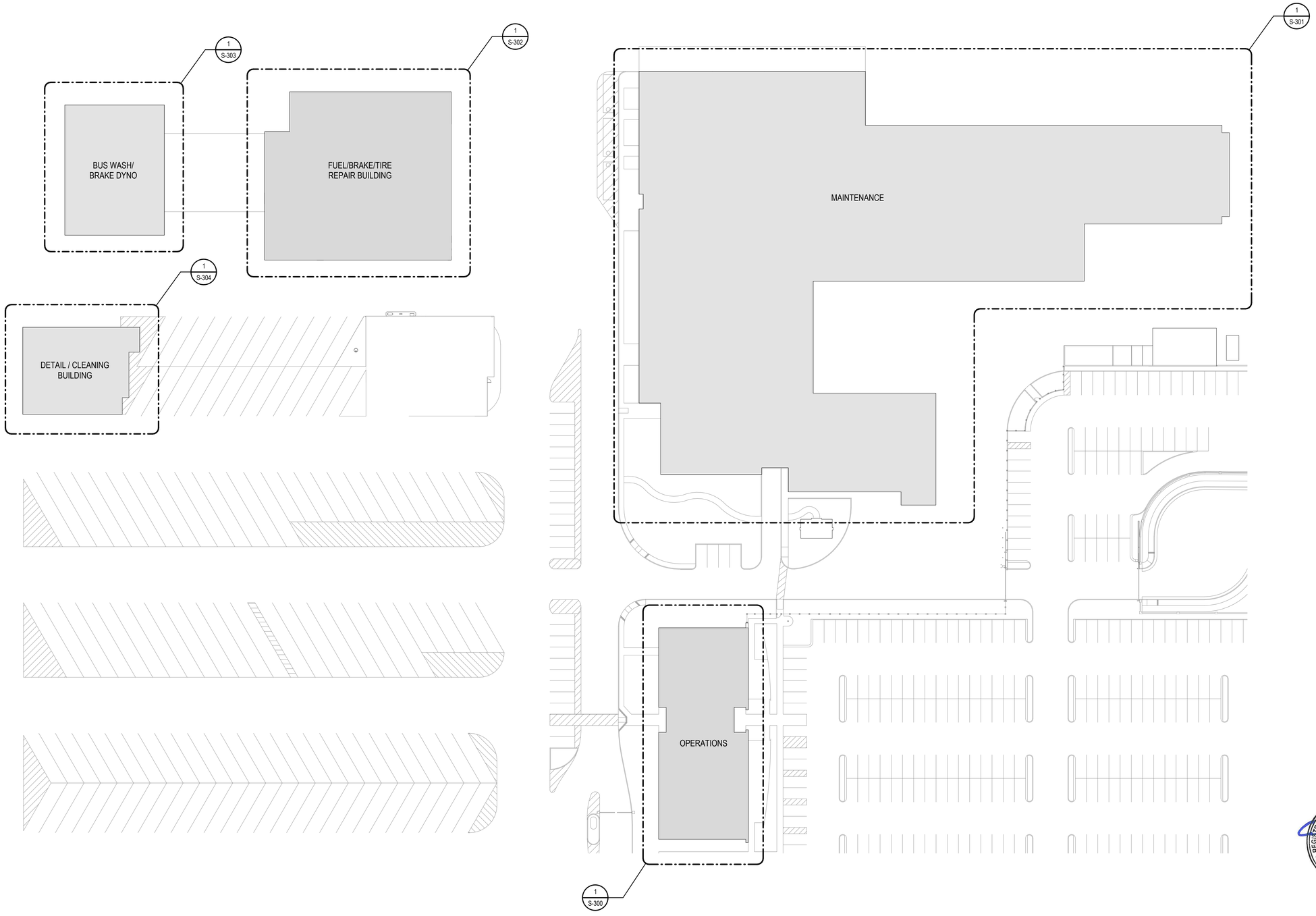

1 S-200 **OVERALL PLAN**
1" = 40'-0"

N

Stantec
801 S. Figueroa Street, Suite 300
Los Angeles, CA 90017

Copyright Reserved
The Contractor shall verify and be responsible for all dimensions. DO NOT scale the drawing - any errors or omissions shall be reported to Stantec without delay.
The copyright in all designs and drawings are the property of Stantec. Reproduction or use for any purpose other than that authorized by Stantec is forbidden.

REVISION	DESCRIPTION	DATE
5/13/2024	100% RESUBMITTAL	
03/27/2024	100% CONSTRUCTION DRAWING SUBMITTAL	
02/13/2024	UPDATED 90% CONSTRUCTION DRAWING SUBMITTAL	
12/07/2023	90% CONSTRUCTION DRAWING SUBMITTAL	

REPLACEMENT OF MECHANICAL UNITS AT SANTA ANA BUS BASE
4301 W. MAC ARTHUR BLVD., SANTA ANA, CA

OVERALL PLAN

JOB #:	
DESIGN BY:	IS
DRAWN BY:	DK
CHECKED BY:	MP
DATE:	12/07/2023
SCALE:	1" = 40'-0"
SHEET:	S-200P

REGISTERED PROFESSIONAL ENGINEER
ALAN W. DYCK
5470
EXP. 09-30-24
STRUCTURAL
STATE OF CALIFORNIA
03-22-24

OCTA
ORANGE COUNTY
TRANSPORTATION AUTHORITY
550 SOUTH MAIN STREET, ORANGE, CA

Autodesk Docs://2014233703_Santa_Ana_Bus/stn_struc_2014233703_Santa_Ana_Bus_OCTA_CTO-3_Mech_Units.rvt

3/22/2024 10:38:09 AM

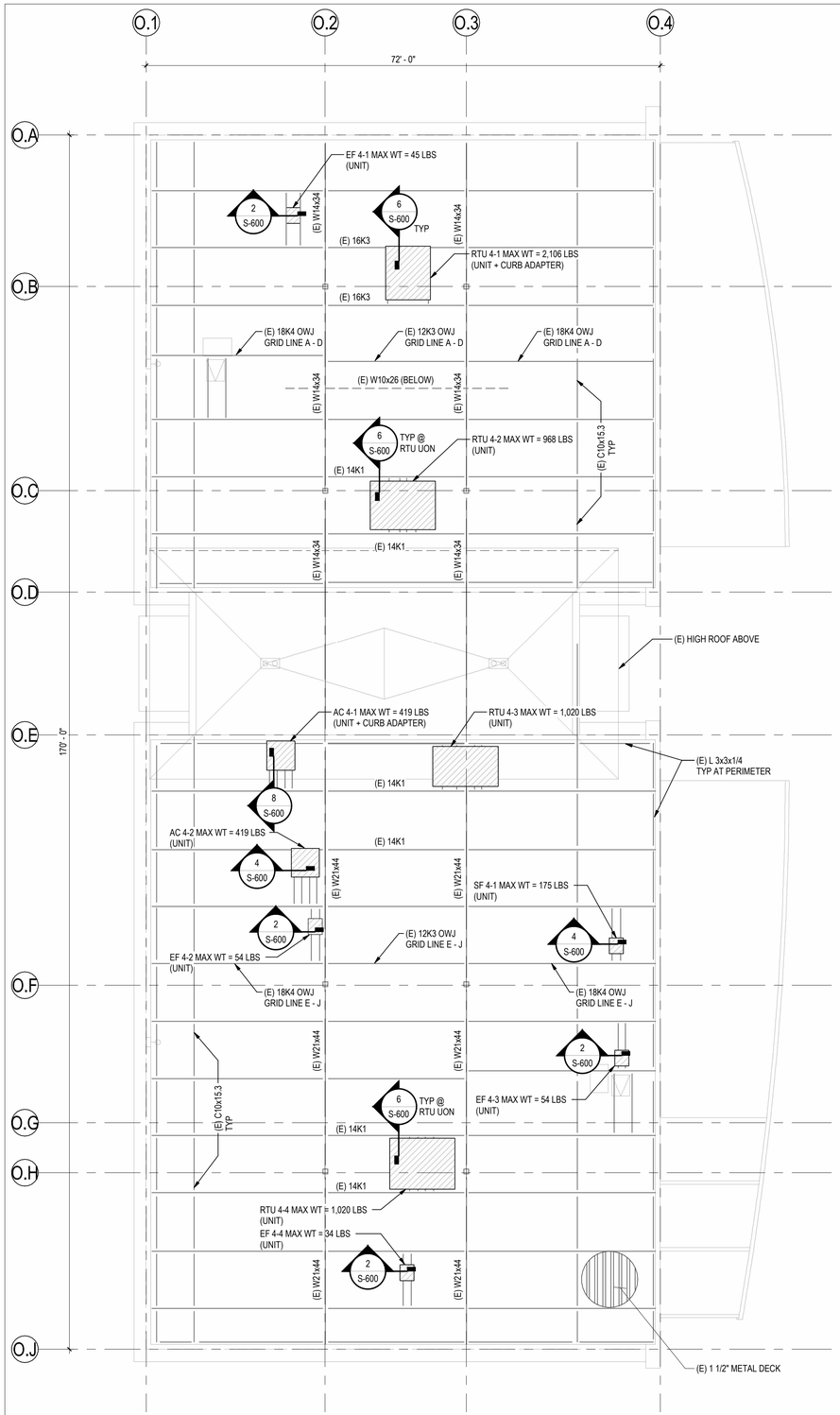

1 S-300 **OPERATIONS BUILDING STRUCTURAL ROOF PLAN**
1" = 10'-0"

ROOF PLAN NOTES:

1. SEE SHEET S-100 FOR STRUCTURAL GENERAL NOTES
2. VERIFY/OBTAIN ALL DIMENSIONS FROM MEP DRAWINGS.
3. INDICATES (E) EXTERIOR PERIMETER WALL.
4. PROVIDE AND COORDINATE OPENING FOR MECHANICAL WORK AS REQUIRED.
5. CONTRACTOR TO FIELD VERIFY EXISTING CONDITIONS PRIOR TO COMMENCING WORKS. CONTRACTOR TO NOTIFY EOR OF DISREPANCIES BETWEEN FIELD CONDITIONS AND DRAWINGS.
6. INDICATES (N) MECHANICAL UNIT TO REPLACE EXISTING TYP UON.
7. EXISTING ROOF FRAMING INFORMATION WAS OBTAINED FROM RECORD DRAWINGS DATED 10/11/06.

N

Stantec
801 S. Figueroa Street, Suite 300
Los Angeles, CA 90017

Copyright Reserved
The Contractor shall verify and be responsible for all dimensions. DO NOT scale the drawing - any errors or omissions shall be reported to Stantec without delay.
The Copyright to all designs and drawings are the property of Stantec. Reproduction or use for any purpose other than that authorized by Stantec is forbidden.

REVISION	DESCRIPTION	DATE
5/13/2024	100% RESUBMITTAL	
03/27/2024	100% CONSTRUCTION DRAWING SUBMITTAL	
02/13/2024	UPDATED 90% CONSTRUCTION DRAWING SUBMITTAL	
12/07/2023	90% CONSTRUCTION DRAWING SUBMITTAL	

REPLACEMENT OF MECHANICAL UNITS AT SANTA ANA BUS BASE
4301 W. MAC ARTHUR BLVD., SANTA ANA, CA

OPERATIONS BUILDING STRUCTURAL ROOF PLAN

JOB #:	
DESIGN BY:	IS
DRAWN BY:	DK
CHECKED BY:	MP
DATE:	12/07/2023
SCALE:	1" = 10'-0"
SHEET:	S-300P

REGISTERED PROFESSIONAL ENGINEER
ALAN W. DYCK
5470
EXP. 09-30-24
STRUCTURAL
STATE OF CALIFORNIA
03-22-24

OCTA
ORANGE COUNTY TRANSPORTATION AUTHORITY
550 SOUTH MAIN STREET, ORANGE, CA

Autodesk Docs://2014233703_Santa_Ana_Bus/stn_struc_2014233703_Santa_Ana_Bus_OCTA_CTO-3_Mech_Units.rvt
3/22/2024 10:38:14 AM

MODEL #'S	WT (LBS)	B (IN)	D (IN)	H (IN)	CG (IN)
SF 4-1	175	26	26	27.25	49
SF 5-1, 5-2, 5-3	766	52	52	39.25	56
SF 5-4	783	52	52	39.25	56
SF 5-5	307	34	34	27.25	49
SF 5-8	199	26	26	27.25	49
SF 5-9,6-2	427	40	40	31.25	52
SF 5-12	194	26	26	27.25	49
SF 5-13,5-16	196	26	26	27.25	49
SF 5-14	307	34	34	27.25	49
SF 5-15	194	26	26	27.25	49
SF 6-1	783	52	52	39.25	56
AC 4-2	419	52	45	46	60
AC 5-1, 5-2	419	52	45	46	73

NOTES:
1. MAX WEIGHT DOES NOT INCLUDE (E) CURB.
2. RE-USE EXISTING CURB SMD.

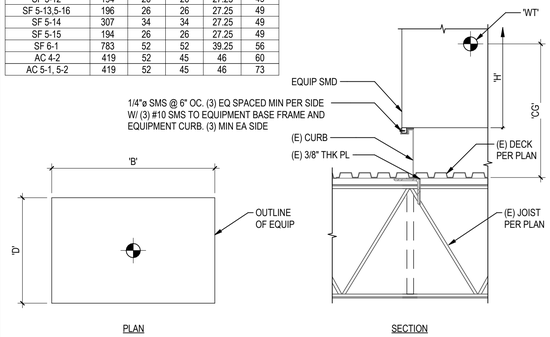

4 S-600 MECH UNIT ANCHORAGE GROUP C

NTS

MODEL #'S	WT (LBS)	B (IN)	D (IN)	H (IN)	CG (IN)
EF 5-1	2595	66	66	136.79	122
EF 5-2 & 5-5	2095	60	60	125.19	108
EF 5-3 & 5-4	2095	60	60	125.19	108
EF 5-6	745	40	40	83.45	94
EF 5-25	1035	48	48	103.79	105
EF 5-28	1225	66	66	134.79	121
EF 5-37	1036	48	48	103.79	105
EF 6-1	2113	60	60	127.19	117
EF 6-2	1805	56	56	120.45	114
EF 6-3	1065	48	48	101.79	104
SF 5-6	352	34	34	27.25	71
SF 5-10	377	34	34	27.25	71

NOTES:
1. MAX WEIGHT DOES NOT INCLUDE (E) CURB.
2. RE-USE EXISTING CURB SMD.

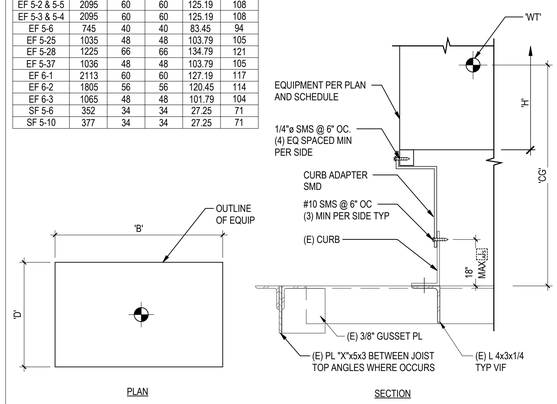

3 S-600 MECH UNIT ANCHORAGE GROUP B

NTS

MODEL #'S	WT (LBS)	B (IN)	D (IN)	H (IN)	CG (IN)
EF 4-1	45	19	19	28.25	46
EF 4-2	54	19	19	28.25	46
EF 4-3	54	19	19	28.25	46
EF 4-4, 5-26	34	19	19	13.38	38
EF 5-7, 5-8, 5-9, 5-10	165	34	34	33.88	49
EF 5-11	28	17	17	13.5	38
EF 5-13	54	19	19	28.25	46
EF 5-16, 5-17, 5-18	165	34	34	33.88	49
EF 5-19	140	30	30	28.63	46
EF 5-20	97	22	22	29.75	47
EF 5-21, 5-22	132	30	30	28.63	46
EF 5-24	76	22	22	29.75	47
EF 5-29	84	22	22	29.75	47
EF 5-31	119	22	22	29.75	47
EF 5-32	34	19	19	13.38	38
EF 5-33	203	34	34	33.88	49
EF 5-34	119	22	22	29.75	47
EF 5-35	67	19	19	28.25	46
EF 5-38	54	19	19	28.25	46
EF 5-39	40	19	19	15.25	39
EF 5-40	57	19	19	28.25	46
EF 5-41	72	22	22	29.75	47
EF 6-4	28	17	17	13.5	38
EF 6-6	37	19	19	13.38	38
EF 6-7	203	34	34	33.88	49
EF 6-8	34	19	19	13.38	38
EF 6-9	73	22	22	29.75	47
EF 7-1	773	40	40	36	50
EF 7-2	141	30	30	28.63	46
EF 8-1	45	19	19	28.25	46
EF 5-42	95	22.91	30.88	26	47

NOTES:
1. MAX WEIGHT DOES NOT INCLUDE (E) CURB.
2. RE-USE EXISTING CURB SMD.

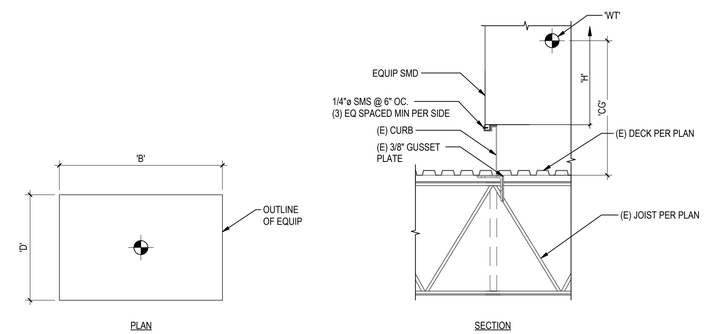

2 S-600 MECH UNIT ANCHORAGE GROUP A

NTS

MODEL #'S	WT (LBS)	B (IN)	D (IN)	H (IN)	CG (IN)
AC 4-1	419	52	45	46	73
RTU 5-4	389	48.8	41.3	35.4	80.3
RTU 6-1	474	58.6	44.3	39.4	94
HP 6-1	389	52	45	46	73
AC 6-1	419	52	45	46	73
RTU 5-5	389	52	45	46	73

NOTES:
1. MAX WEIGHT INCLUDES EQUIPMENT WT & CURB ADAPTER ONLY.
2. RE-USE EXISTING CURB SMD.

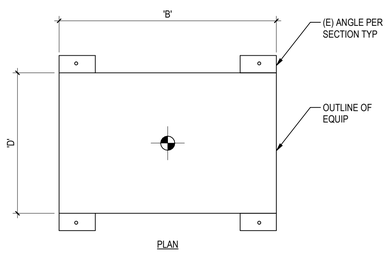

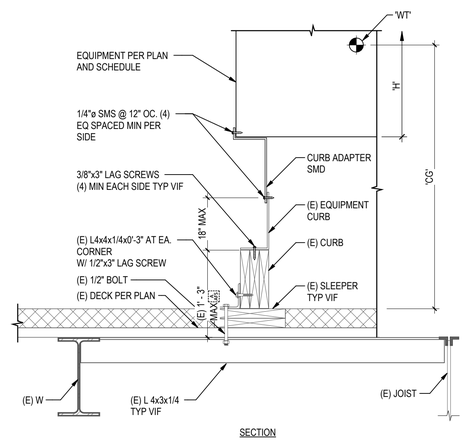

8 S-600 MECH UNIT ANCHORAGE GROUP F

NTS

MODEL #'S	WT (LBS)	B (IN)	D (IN)	H (IN)	CG (IN)
RTU 4-1	2106	52	45	46	119
RTU 4-2	968	88.08	53.28	50.88	87
RTU 4-3	1020	88.08	53.28	50.88	87
RTU 4-4	1020	88.08	53.28	50.88	87
RTU 5-1, 5-2	1924	123	87	59.04	94
RTU 5-3	1924	123	87	59.04	94

NOTES:
1. MAX WEIGHT INCLUDES EQUIPMENT WT & CURB ADAPTER ONLY.
2. RE-USE EXISTING CURB SMD.

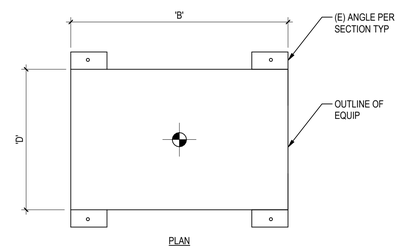

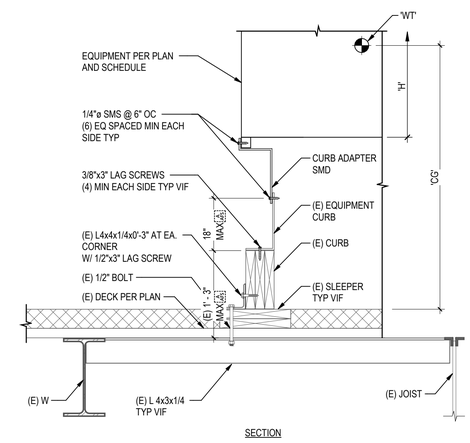

6 S-600 MECH UNIT ANCHORAGE GROUP E

NTS

MODEL #'S	WT (LBS)	B (IN)	D (IN)	H (IN)	CG (IN)
MAU 5-1	3129	186	91	60	85.5
MAU 5-2,5-5	2158	165.5	78	51	68.5
MAU 5-3,5-4	2158	165.5	78	51	68.5
MAU 5-6	3134	186	91	60	86.5
MAU 5-7	1407	140	52	39	68.5
MAU 5-8	1377	140	52	39	68.5

NOTES:
1. MAX WEIGHT INCLUDES EQUIPMENT WT & CURB ADAPTER ONLY.
2. RE-USE EXISTING CURB SMD.

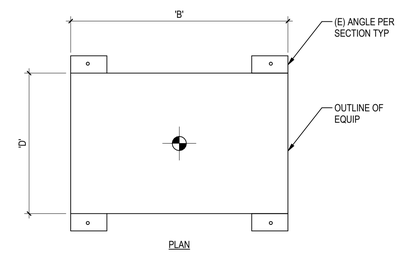

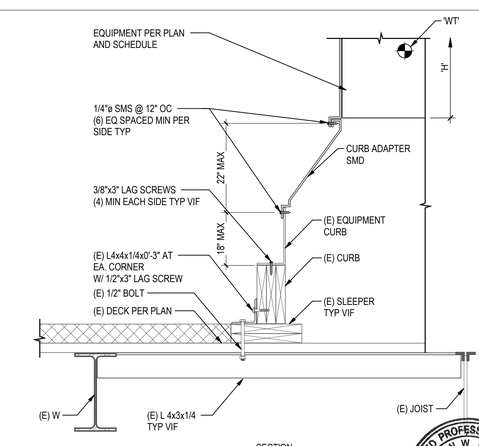

10 S-600 MECH UNIT ANCHORAGE GROUP D

NTS

REGISTERED PROFESSIONAL ENGINEER ALAN W. DYCK 5470 EXP. 09-30-24 STRUCTURAL STATE OF CALIFORNIA
03-22-24

IFB 4-2550 EXHIBIT B

Stantec
801 S. Figueroa Street, Suite 300
Los Angeles, CA 90017

Copyright Reserved
The Contractor shall verify and be responsible for all dimensions. DO NOT scale the drawing - any errors or omissions shall be reported to Stantec without delay.
This drawing is the property of Stantec and shall not be reproduced or used for any purpose other than that authorized by Stantec in writing. Reproduction or use for any purpose other than that authorized by Stantec is forbidden.

REVISION	DESCRIPTION	DATE
5/13/2024	100% RESUBMITTAL	
03/27/2024	100% CONSTRUCTION DRAWING SUBMITTAL	
02/13/2024	UPDATED 90% CONSTRUCTION DRAWING SUBMITTAL	
12/07/2023	90% CONSTRUCTION DRAWING SUBMITTAL	

REPLACEMENT OF MECHANICAL UNITS AT SANTA ANA BUS BASE

4301 W. MAC ARTHUR BLVD., SANTA ANA, CA

ANCHORAGE SCHEDULES

JOB #:	
DESIGN BY:	IS
DRAWN BY:	DK
CHECKED BY:	MP
DATE:	12/07/2023
SCALE:	As indicated
SHEET:	S-600P

OCTA

ORANGE COUNTY TRANSPORTATION AUTHORITY
550 SOUTH MAIN STREET, ORANGE, CA

Autodesk Docs://2014233703_Santa_Ana_Bus/stn_struc_2014233703_Santa_Ana_Bus_OCTA_CTO-3_Mech_Units.rvt
3/22/2024 10:38:18 AM

IFB 4-2550 EXHIBIT B

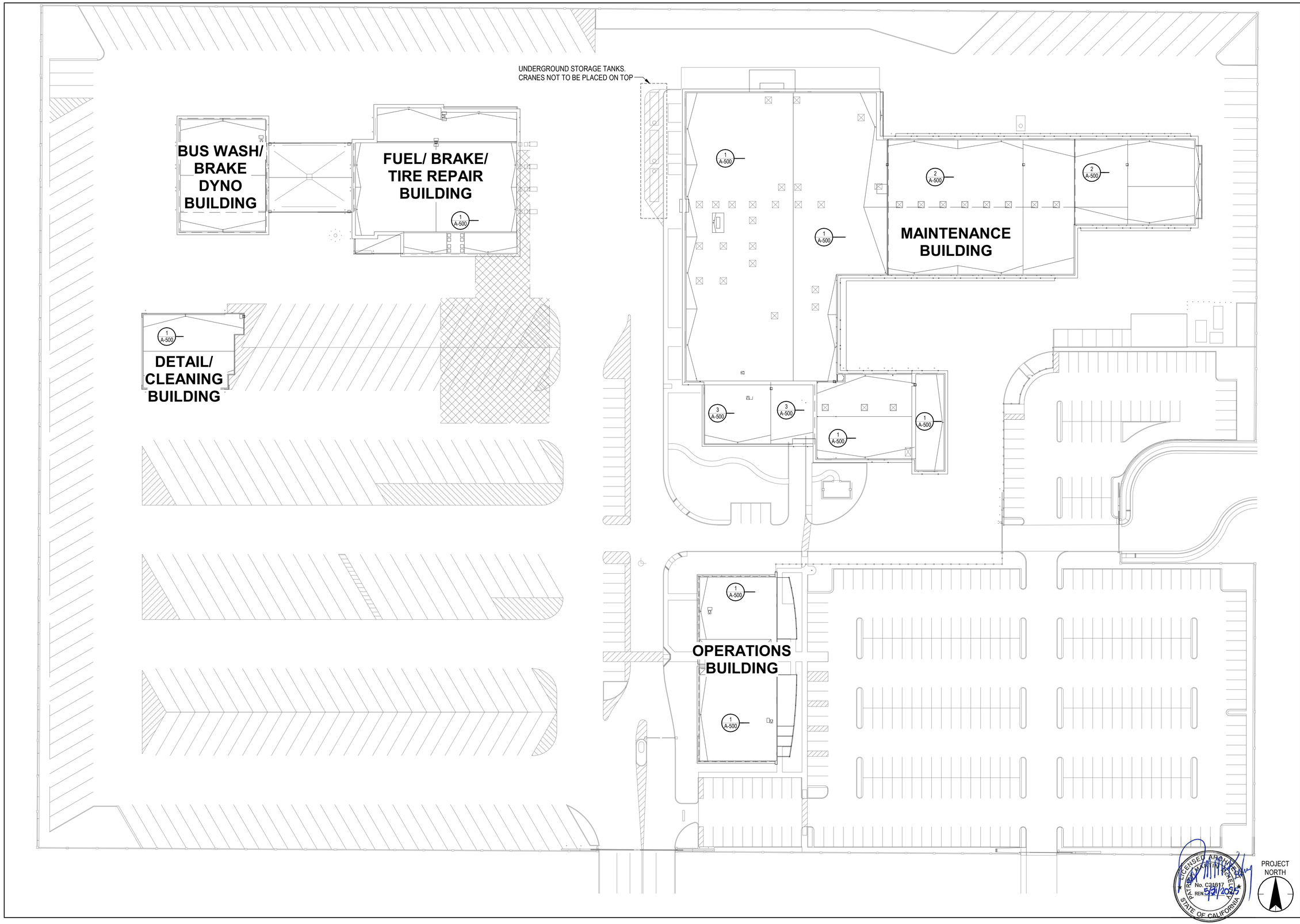

Stantec

801 S. Figueroa Street, Suite 300
Los Angeles, CA 90017

Copyright Reserved
The Contractor shall verify and be responsible for all dimensions. DO NOT scale the drawing - any errors or omissions shall be reported to Stantec without delay.
The Copyright in the design and drawing is the property of Stantec. Reproduction or use for any purpose other than that authorized by Stantec is forbidden.

REVISION	DESCRIPTION	DATE
	100% RESUBMITTAL	5/13/2024
3	100% CONSTRUCTION DRAWING SUBMITTAL	03/18/2024
2	90% UPDATED CONSTRUCTION SUBMITTAL	02/13/2024
1	90% CONSTRUCTION DRAWING SUBMITTAL	12/07/2023

REPLACEMENT OF MECHANICAL UNITS AT SANTA ANA BUS BASE

4301 W MacArthur Blvd, Santa Ana, CA 92704

ARCHITECTURAL SITE PLAN

JOB #:	
DESIGN BY:	Designer
DRAWN BY:	Author
CHECKED BY:	Checker
DATE:	
SCALE:	1" = 40'-0"
SHEET:	A-100P

LICENSED ARCHITECT
PATRICK MARTIN HACKELEY
No. C21617
REN. 5/31/2025
STATE OF CALIFORNIA

OCTA

ORANGE COUNTY TRANSPORTATION AUTHORITY
550 SOUTH MAIN STREET, ORANGE, CA

Autodesk Docs://2014233703_Santa_Ana_Bus/arch_2014233703-Revit22.rvt

5/9/2024 10:14:26 AM

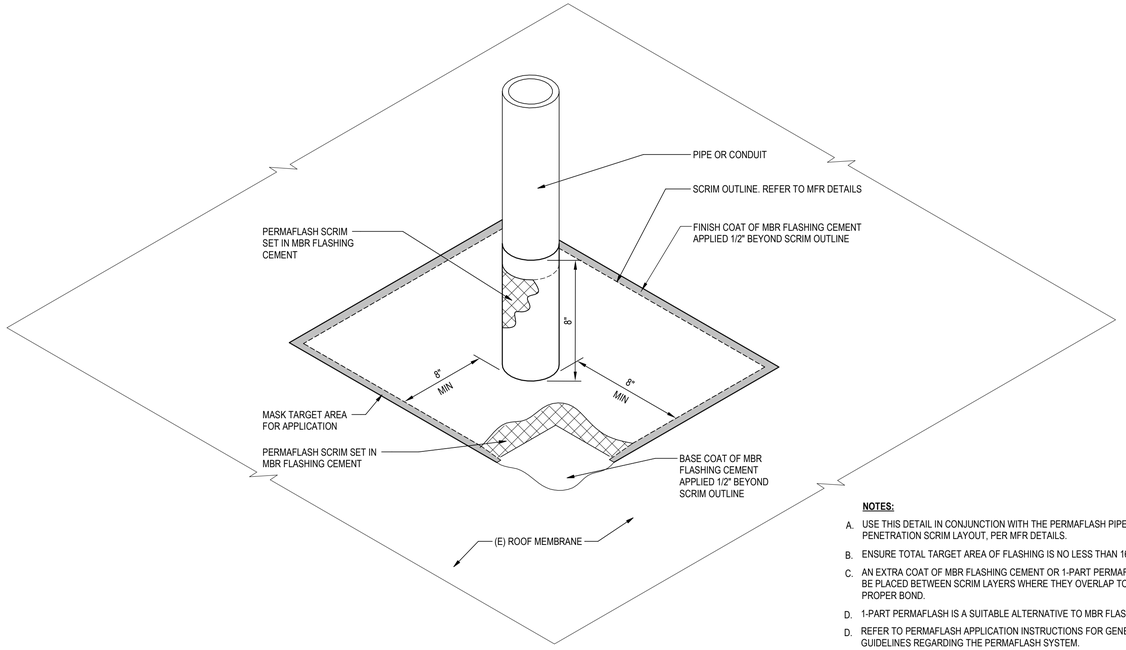

NOTES:

A. USE THIS DETAIL IN CONJUNCTION WITH THE PERMAFLASH PIPE PENETRATION SCRIM LAYOUT, PER MFR DETAILS.

B. ENSURE TOTAL TARGET AREA OF FLASHING IS NO LESS THAN 16" x 16".

C. AN EXTRA COAT OF MBR FLASHING CEMENT OR 1-PART PERMAFLASH MUST BE PLACED BETWEEN SCRIM LAYERS WHERE THEY OVERLAP TO ENSURE A PROPER BOND.

D. 1-PART PERMAFLASH IS A SUITABLE ALTERNATIVE TO MBR FLASHING CEMENT.

D. REFER TO PERMAFLASH APPLICATION INSTRUCTIONS FOR GENERAL GUIDELINES REGARDING THE PERMAFLASH SYSTEM.

E. AFTER THE PERMAFLASH HAS CURED OR GRANULES BROADCAST INTO THE WET CEMENT AN ADDITIONAL SURFACING OF JM COATING TO BE APPLIED.

5 / A-500 PIPE/ CONDUIT PENETRATION @ ROOF TYPE 1 & 3

1 1/2" = 1'-0"

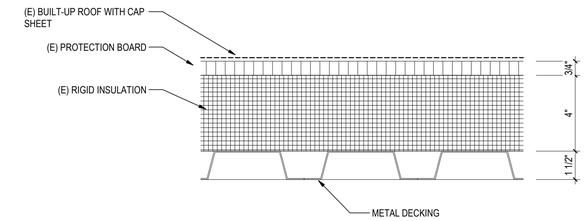

1 / A-500 ROOF TYPE 1

3" = 1'-0"

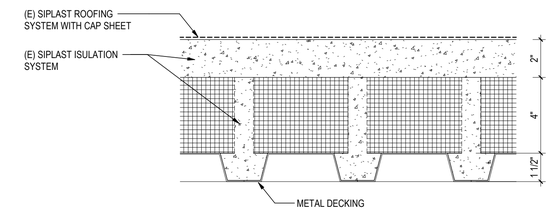

2 / A-500 ROOF TYPE 2

3" = 1'-0"

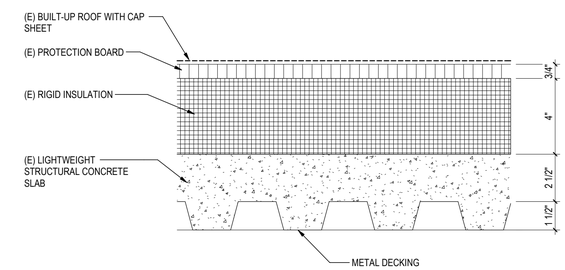

3 / A-500 ROOF TYPE 3

3" = 1'-0"

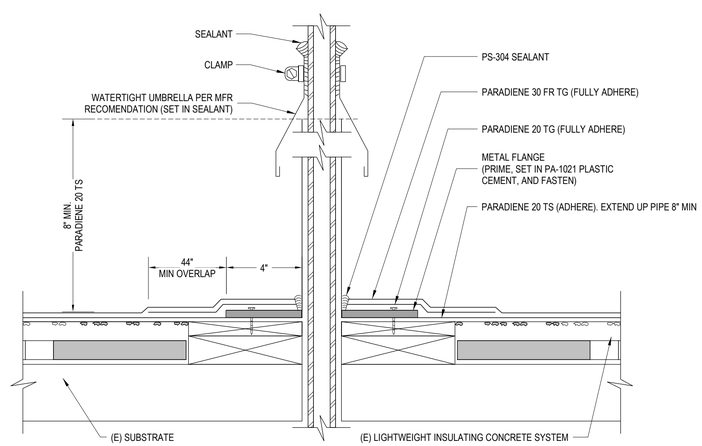

6 / A-500 PIPE/ CONDUIT PENETRATION @ ROOF TYPE 2

3" = 1'-0"

Stantec
801 S. Figueroa Street, Suite 300
Los Angeles, CA 90017

Copyright Reserved
The contractor shall verify and be responsible for all dimensions. DO NOT scale the drawing - any errors or omissions shall be reported to Stantec without delay.
This drawing is the property of Stantec and shall not be reproduced in any manner. Reproduction or use for any purpose other than that authorized by Stantec is prohibited.

REVISION	DESCRIPTION	DATE
1	90% CONSTRUCTION DRAWING SUBMITTAL	12/07/2023
2	90% UPDATED CONSTRUCTION SUBMITTAL	02/13/2024
3	100% CONSTRUCTION DRAWING SUBMITTAL	03/18/2024
	100% RESUBMITTAL	5/13/2024

REPLACEMENT OF MECHANICAL UNITS AT SANTA ANA BUS BASE
4301 W MacArthur Blvd, Santa Ana, CA 92704

DETAILS

JOB #:	
DESIGN BY:	Designer
DRAWN BY:	Author
CHECKED BY:	Checker
DATE:	
SCALE:	As indicated
SHEET:	A-500P

LICENSED ARCHITECT
No. C21617
REN. 5/31/2025
STATE OF CALIFORNIA

OCTA
ORANGE COUNTY TRANSPORTATION AUTHORITY
550 SOUTH MAIN STREET, ORANGE, CA

Autodesk Docs://2014233703_Santa_Ana_Bus/arch_2014233703-Revit22.rvt
5/9/2024 10:14:26 AM

IFB 4-2550 EXHIBIT B

(HVAC)

*NOTE: ALL DUCT SIZES ARE INTERIOR, FREE DIMENSIONS ALWAYS WIDTH (HORIZONTAL DIM.) x HEIGHT (VERTICAL DIM.)

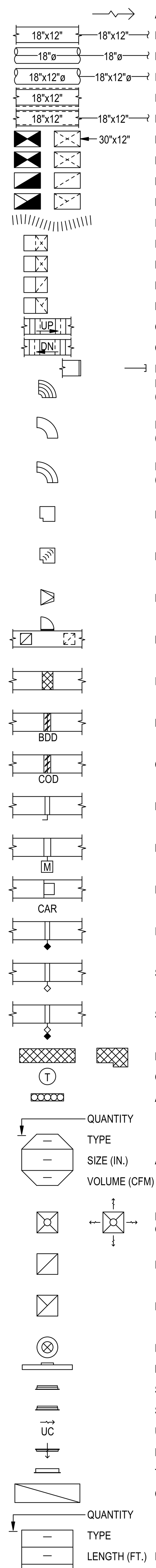

- AIR FLOW ARROW
- RECTANGULAR DUCT AND SIZE*
- ROUND DUCT AND SIZE*
- FLAT OVAL DUCT AND SIZE*
- EXTERIOR DUCT TREATMENT*
- RECTANGULAR DUCT WITH ACOUSTIC LINING*
- DUCT SECTION, SUPPLY AIR. APPLIES TO RECT., ROUND AND OVAL
- DUCT SECTION, OUTSIDE AIR. APPLIES TO RECT., ROUND AND OVAL
- DUCT SECTION, RETURN AIR. APPLIES TO RECT., ROUND AND OVAL
- DUCT SECTION, EXHAUST AIR. APPLIES TO RECT., ROUND AND OVAL
- FLEXIBLE DUCT
- ELBOW TURN, SUPPLY DOWN. APPLIES TO RECT., ROUND AND OVAL
- DUCT SECTION, OUTSIDE AIR. APPLIES TO RECT., ROUND AND OVAL
- DUCT SECTION, OUTSIDE AIR. APPLIES TO RECT., ROUND AND OVAL
- DUCT SECTION, OUTSIDE AIR. APPLIES TO RECT., ROUND AND OVAL
- CHANGE IN DUCT ELEVATION RISING IN DIRECTION INDICATED
- CHANGE IN DUCT ELEVATION DROPPING IN DIRECTION INDICATED
- END CAP
- ELBOW, RECTANGULAR, SMOOTH RADIUS WITH SPLITTER VANES (0.25 R/W DEFAULT)
- ELBOW, RECTANGULAR, SMOOTH RADIUS WITHOUT VANES (1.5 R/W DEFAULT)
- ELBOW, ROUND, SMOOTH RADIUS (1.5 R/W DEFAULT)
- MITERED ELBOW, RECTANGULAR, WITHOUT VANES
- MITERED ELBOW, RECTANGULAR, WITH TURNING VANES
- RECTANGULAR TO ROUND TRANSITION
- DUCT ACCESS DOOR (TOP, SIDE, BOTTOM)
- FLEXIBLE CONNECTION
- BACKDRAFT DAMPER
- CABLE OPERATED DAMPER
- MANUAL DAMPER
- MOTORIZED DAMPER
- PRESSURE INDEPENDENT REGULATOR
- FIRE DAMPER
- SMOKE DAMPER
- SMOKE AND FIRE DAMPER
- DUCT SILENCER/TRANSFER ELBOW
- CONTROL DEVICE (REFER TO CONTROLS LEGEND)
- AIR FLOW MEASURING STATION (REFER TO CONTROLS LEGEND)
- AIR OUTLET OR INLET TAG)REFER TO SCHEDULE)
- RECTANGULAR DIFFUSER, SUPPLY. OPTIONAL ARROWS SHOW THE FLOW DIRECTION.
- RECTANGULAR REGISTER OR GRILLE, RETURN
- RECTANGULAR REGISTER OR GRILLE, EXHAUST
- ROUND DIFFUSER, SUPPLY
- LINEAR DIFFUSER
- SIDEWALL REGISTER OR GRILLE, SUPPLY
- SIDEWALL GRILLE, RETURN OR EXHAUST
- UNDERCUT DOOR
- DOOR GRILLE OR LOUVER
- TRANSFER GRILLE OR LOUVER
- COIL (REFER TO CONTROLS LEGEND)
- RADIATION HEATING TAG (REFER TO SCHEDULE)

NOTE: NOT ALL SYMBOLS, SYSTEMS, AND ABBREVIATIONS MAY BE USED ON THIS PROJECT

(HVAC)

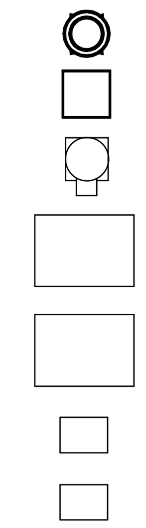

- EXHAUST FAN
- SUPPLY FAN
- EXHAUST FAN
- ROOFTOP UNIT
- MAKEUP AIR UNIT
- PACKAGED AIR CONDITIONER
- PACKAGED HEAT PUMP

WORK DEFINITION

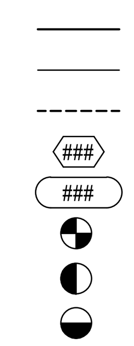

- NEW WORK (N)
- EXISTING (E)
- REMOVE EXISTING (D)
- KEY NOTE
- EQUIPMENT IDENTIFICATION
- CONNECTION TO EXISTING
- DISCONNECT (CUT AND CAP)
- POINT OF DEMOLITION

ABBREVIATIONS

A/C	AIR CONDITIONING UNIT
AAV	AUTOMATIC AIR VENT
ADA	AMERICANS WITH DISABILITIES ACT
ADJ	ADJUSTABLE
AFC	ABOVE FINISHED CEILING
AFF	ABOVE FINISHED FLOOR
AFG	ABOVE FINISHED GRADE
AFR	ABOVE FINISH ROOF
AHJ	AUTHORITY HAVING JURISDICTION
AP	ACCESS PANEL
APD	AIR PRESSURE DROP
AVG	AVERGAGE
BAS	BUILDING AUTOMATION SYSTEM
BDD	BACKDRAFT DAMPER
BHP	BRAKE HORSEPOWER
BMS	BUILDING MANAGEMENT SYSTEM
BOD	BOTTOM OF DUCT
BOP	BOTTOM OF PIPE
BTU	BRITISH THERMAL UNIT
BTUH	BRITISH THERMAL UNIT PER HOUR
C/W	COMPLETE WITH
CAV	CONSTANT AIR VOLUME
CBV	CIRCUIT BALANCING VALVE
CFM	CUBIC FEET PER MINUTE
DB	DRY BULB TEMEPRATURE
dB	DECIBEL(S)
dBA	A-WEIGHTED DECIBLES
DDC	DIRECT DIGITAL CONTROL
DEG	DEGREE
DIA./Ø	DIAMETER
DIFF	DIFFERENTIAL
DIV	DIVISION
DN	DOWN
DWG	DRAWING
EA	EXHAUST AIR
EA (D)	EXHAUST AIR, DISHWASH
EA (G)	EXHAUST AIR, GENERAL
EA (K)	EXHAUST AIR, KITCHEN
EA (LAB)	EXHAUST AIR, LABORATORY
EA (LD)	EXHAUST AIR, LAUNDRY/DRYER
EA (W)	EXHAUST AIR, WASHROOM
EAT	ENTERING AIR TEMPERATURE
EAV	EXHAUST AIR VALVE
ECM	ELECTRONICALLY COMMUNICATED MOTOR
ED	EXISTING TO BE DEMOLISHED (DEMOLITION PLANS)
EER	ENERGY EFFICIENCY RATIO
EG	ETHELYENE GLYCOL
EMCS	ENERGY MANAGMENT CONTROL SYSTEM
ER	EXISTING RELOCATED (NEW CONSTRUCTION PLANS)
ERL	EXISTING TO BE RELOCATED (DEMOLITION PLANS)
ESP	EXTERNAL STATIC PRESSURE
EWT	ENTERING WATER TEMPERATURE
EXIST / E	EXISTING (DEMOLITION PLANS)
FC	FAIL CLOSED
FLA	FULL LOAD AMPERAGE
FO	FAIL OPEN
FP	FIRE PROTECTION
FPM	FEET PER MINUTE
FPS	FEET PER SECOND
FT	FOOT/FEET
GA	GAUGE
GAL	GALLON (US)
GC	GENERAL CONTRACTOR
GEO	GEODETIC
GPM	GALLONS PER MINUTE
HEPA	HIGH EFFICIENCY PARTICULATE AIR (FILTER)
HP	HORSEPOWER
HR	HOUR
HVAC	HEATING / VENTILATING / AIR CONDITIONING
HZ	HERTZ
IE	INVERT ELEVATION
IEER	INTEGRATED ENERGY EFFECIENCY RATIO
IN	INCHES
IN WG	INCHES WATER GAUGE
IPLV	INTEGRATED PART LOAD VALUE
kW	KILOWATT
kWh	KILOWATT HOUR
LAT	LEAVING AIR TEMPERATURE
LBS	POUNDS
LF	LINEAR FEET
LWT	LEAVING WATER TEMPERATURE
M	METER
MAX	MAXIMUM
MBH	THOUSAND OF BTUH
MCA	MINIMUM CIRCUIT AMPS
MERV	MINIMUM EFFECIENCY REPORTING VALUES
MFR	MANUFACTURER
MIN	MINIMUM
MOP	MAXIMUM OVERCURRENT PROTECTION
MWT	MEAN WATER TEMPERATURE
N/A	NOT APPLICABLE
NC	NOISE CRITERIA
NC	NORMALLY CLOSED
NIC	NOT IN CONTRACT
NO	NORMALLY OPEN
NPS	NOMINAL PIPE SIZE
NTS	NOT TO SCALE
OA	OUTSIDE AIR
OFCI	OWNER FURNISHED, CONTRACTOR INSTALLED
OFE	OWNER FURNISHED EQUIPMENT
OFOI	OWNER FURNISHED / OWNER INSTALLED
PG	PROPYLENE GLYCOL
POE	POINT OF ENTRANCE
POS	POINT OF SERVICE
PPM	PARTS PER MILLION
PSI	POUNDS PER SQUARE INCH
PSIA	POUNDS PER SQUARE INCH, ABSOLUTE
PSIG	POUNDS PER SQUARE INCH, GAGE
PTS	PNEUMATIC TUBE STATION

ABBREVIATIONS

PVC	POLYVINYL CHLORIDE
RA	RETURN AIR
RELA	RELIEF AIR
REQD	REQUIRED
RH	RELATIVE HUMIDITY
RPM	REVOLUTIONS PER MINUTE
SA	SUPPLY AIR
SEER	SEASONAL ENERGY EFFICIENCY RATION
SP	STATIC PRESSURE
SP	STAIR PRESSURIZATION AIR (*)
SRV	SAFETY RELIEF VALVE
TA	TRANSFER AIR
TEMP	TEMPERATURE
TSP	TOTAL STATIC PRESSURE
TSTAT	THERMOSTAT
TYP	TYPICAL
UC	UNDER CUT (DOOR)
UG	UNDERGROUND
UP	UP
VAV	VARIABLE AIR VOLUME
VFD	VARIABLE FREQUENCY DRIVE
VIF	VERIFY IN FIELD
VTR	VENT-THRU-ROOF
W/	WITH
W/O	WITHOUT
WB	WET BULB TEMPERATURE
WG	WATER GAUGE
ZN-#	ZONE
°C	CELSIUS
°F	FAHRENHEIT

EQUIPMENT IDENTIFICATION

AB-#	AIR BLENDER
AC-#	AIR COMPRESSOR
ACU-#	AIR CONDITIONING UNIT
ADS-#	AIR AND DIRT SEPARATOR
AF-#	AIR FILTER
AHU-#	AIR HANDLING UNIT
AS-#	AIR SEPARATOR
ATU-#	AIR TERMINAL UNIT
B-#	BOILER
BCU-#	BLOWER COIL UNIT
BT-#	BATH TUB
CB-#	CHILLED BEAM
CC-#	COOLING COIL
CH-#	CHILLER
CONV-#	CONVECTOR
CRU-#	CONDENSATE RETURN UNIT
CT-#	COOLING TOWER
CU-#	CONDENSING UNIT
CUH-#	CABINET UNIT HEATER
CV-#	CONTROL VALVE
DAC-#	DOOR AIR CURTAIN
DC-#	DUST COLLECTOR
DCT-#	DECONTAMINATION TANK
DCVA-#	DOUBLE CHECK VALVE ASSEMBLY
DF-#	DRINKING FOUNTAIN
DG-#	DOOR GRILLE
DS-#	DUCT SILENCER
DU-#	DEHUMIDIFICATION UNIT
DWH-#	DOMESTIC WATER HEATER
E-#	EXHAUST GRILLE / REGISTER / DIFFUSER
EL-#	EXPANSION LOOP
ERC-#	ENERGY RECOVERY COIL
ERU-#	ENERGY RECOVERY UNIT
ES-#	EMERGENCY SHOWER
ETU-#	EXHAUST TERMINAL UNIT
EWC-#	ELECTRIC WATER COOLER
EWS-#	EYE WASH STATION
F(C)-#	FAN CEILING
F(E)-#	FAN EXHAUST
F(LE)-#	FAN LABORATORY EXHAUST
F(R)-#	FAN RETURN
F(S)-#	FAN SUPPLY
F(T)-#	FAN TRANSFER
F-#	FAN
FCU-#	FAN COIL UNIT
FD-#	FLOOR DRAIN
FFU-#	FAN FILTER UNIT
FPP-#	FIRE PROTECTION PUMP
FPTU-#	FAN POWERED TERMINAL UNIT
FTR-#	FINNED TUBE RADIATOR
FUR-#	FURNACE
GFS-#	GLYCOL FEED SYSTEM
GSG-#	GAS-FIRED STEAM GENERATOR(*)
H(C)-#	HOOD (CANOPY)
H(HC)-#	HOOD (HEAT AND CONDENSATE)
H(I)-#	HOOD (INTAKE)
H(K)-#	HOOD (KITCHEN)
H(R)-#	HOOD (RELIEF)
H(RH)-#	HOOD (RANGE)
H-#	HUMIDIFIER
HC-#	HEATING COIL
HP-#	HEAT PUMP
HRU-#	HEAT RECOVERY UNIT
HT-#	HYDROPNEUMATIC TANK
HX-#	HEAT EXCHANGER
LATU-#	LAB AIR TERMINAL UNIT
LAV-#	LAVATORY
MAC-#	MEDICAL AIR COMPRESSOR
MAU-#	MAKEUP AIR UNIT
MD-#	MOTORIZED DAMPER
MSK-#	MOP SINK
MV-#	MIXING VALVE
MVP-#	MEDICAL VACUUM PUMP
P-#	PUMP
PDU-#	POOL DEHUMIDIFICATION UNIT
PRV-#	PRESSURE REDUCING VALVE
PTAC-#	PACKAGED TERMINAL AIR CONDITIONER
R-#	RETURN AIR GRILLE / REGISTER / DIFFUSER
RD-#	ROOF DRAIN
RH-#	RANGE HOOD
RP-#	RADIANT PANEL
RPBP-#	REDUCED PRESSURE BACKFLOW PREVENTER
RTU-#	ROOFTOP UNIT
S-#	SUPPLY GRILLE / REGISTER / DIFFUSER
SH-#	SHOWER
SK-#	SINK
SPC-#	SOLAR PANEL COLLECTOR
SSF-#	SIDE STREAM FILTER
T(B)-#	TANK (BUFFER TANK)
T(E)-#	TANK (EXPANSION TANK)
T(H)-#	TANK (HYDRO PNEUMATIC TANK)
T(S)-#	TANK (STORAGE TANK)
T-#	TRANSFER AIR GRILLE
UH-#	UNIT HEATER
UR-#	URINAL
USG-#	UNFIRED STEAM GENERATOR
UV-#	UNIT VENTILATOR
VA-#	VALVE
VFD-#	VARIABLE FREQUENCY DRIVE
WC-#	WATER CLOSET
WS-#	WATER SOFTENER
L-#	LOUVER

LICENSED PROFESSIONAL ENGINEER SEVAK GALSTYAN M 39730 EXP. 12/31/25 MECHANICAL STATE OF CALIFORNIA

Stantec
801 S. Figueroa Street, Suite 300
Los Angeles, CA 90017

Copyright Reserved
The Contractor shall verify and be responsible for all dimensions. DO NOT scale the drawing - any errors or omissions shall be reported to Stantec without delay.
The Copyrights to all designs and drawings are the property of Stantec. Reproduction or use for any purpose other than that authorized by Stantec is forbidden.

REVISION	DESCRIPTION	DATE
	100% RESUBMITTAL	5/13/2024
	100% CONSTRUCTION DRAWING SUBMITTAL	3/27/2024
	90% UPDATED CONSTRUCTION SUBMITTAL	2/13/2024
	90% CONSTRUCTION DRAWING SUBMITTAL	12/07/2023

REPLACEMENT OF MECHANICAL UNITS AT SANTA ANA BUS BASE
4301 W. MAC ARTHUR BLVD., SANTA ANA, CA

MECHANICAL GENERAL NOTES, SYMBOLS AND ANNOTATIONS

JOB #:
DESIGN BY: SG
DRAWN BY: RW
CHECKED BY: GY
DATE:
SCALE: 12" = 1'-0"
SHEET: M-001P

OCTA
ORANGE COUNTY TRANSPORTATION AUTHORITY
550 SOUTH MAIN STREET, ORANGE, CA

Autodesk Docs://2014233703_Santa_Ana_Bus/mech_SantaAnaBus_2014233703.rvt

5/8/2024 11:15:01 AM

DEMO NOTES

1. NOT ALL EXISTING CONDITIONS HAVE BEEN SHOWN. CONTRACTOR TO FIELD VERIFY ALL EXISTING CONDITIONS PRIOR TO DEMO.
2. CONTRACTOR SHALL PROTECT ALL WORK AND EXISTING CONDITIONS ASSOCIATED WITH THIS CONTRACT FROM DAMAGE, COVER ENDS OF PIPING AND DUCTWORK NOT ACTIVELY BEING WORKED ON. IT IS THE CONTRACTOR RESPONSIBILITY TO REPAIR OR REPLACE ANY DAMAGED ITEMS THAT OCCURS DURING THIS CONSTRUCTION PROJECT AT NO COST TO THE OWNER.
3. REPLACE ALL REQUIRED EQUIPMENT, PIPING, HANGERS, CONTROLS AND ALL ASSOCIATED EXISTING SYSTEMS AS REQUIRED. TO REPLACE EACH SYSTEM, CONTRACTOR SHALL COORDINATE DEMOLITION WITH EXISTING SYSTEMS AND COMPONENTS TO REMAIN PRIOR TO WORK COMMENCING. EXISTING DUCTWORK IS TO REMAIN.
4. IT IS THE CONTRACTORS RESPONSIBILITY TO CLEAN UP ALL DEBRIS FROM SITE AT THE END OF EACH WORK DAY AND DISPOSE OFF EITHER IN LAY DOWN RECYCLE BINS PROVIDED BY THE CONTRACTOR OR OFFSITE ALL TOGETHER.
5. ALL DEMOLISHED EQUIPMENT SHALL BE TURNED OVER TO THE OWNER UNLESS DIRECTED OTHERWISE. IF OWNER IS NOT TO KEEP DEMOLISHED EQUIPMENT, DISPOSE AS REQUIRED.
6. THE CONTRACTOR SHALL VISIT THE SITE AND BE THOROUGHLY FAMILIARIZED WITH THE EXISTING CONDITIONS PRIOR TO BIDDING. INFORMATION GIVEN ON THESE DRAWINGS ABOUT THE EXISTING INSTALLATION HAS BEEN OBTAINED FROM THE EISTING AS-BUILT DRAWINGS BUT CANNOT BE GUARANTEED ACCURATE IN ALL RESPECTS. VERIFY ALL SUCH INFORMATION BEFORE PROCEEDING WITH ANY NEW WORK THAT MAY BE AFFECTED. INCLUDE AS PART OF THE CONTRACT AL WORK REQUIRED TO PRODUCE THE INDICATED RESULT.
7. UPON SUBMITTING A BID THE CONTRACTOR SHALL BE HELD TO HAVE MADE SUCH EXAMINATIONS OF THE SITE AND NO ALLOWANCE FOR EXTRAS WILL BE ALLOWED FOR ANY ERROR OR OVERSIGHT RESULTING FROM THE CONTRACTORS UNFAMILIARITY WITH THE SITE OR EXISTING CONDITIONS.
8. CONTRACTOR SHALL NOT SCALE DRAWINGS. DIMENSIONS MISSING FROM PLANS OR NEEDED FOR EXECUTION OF WORK SHALL BE CLARIFIED OR PROVIDED BY THE FACILITY REPRESENTATIVE BEFORE WORK IS INSTALLED.
9. INTERRUPTION OF EXISTING SERVICES: THE CONTRACTOR'S ATTENTION IS CALLED TO THE PRESENCE OF EXISTING, CONDUIT, PIPING, ETC. THE CONTRACTOR WILL BE HELD RESPONSIBLE FOR THE PROPER AND APPROVED REPAIR OF ANY AND ALL DAMAGE CAUSED BY HIM OR HIS WORK TO EXISTING BUILDING. ANY INTERRUPTIONS REQUIRED SHALL BE SCHEDULED TO MINIMIZE INCONVENIENCE TO THE FACILITY, AND AT TIMES AS APPROVED IN ADVANCE BY THE FACILITY REPRESENTATIVE. NEW WORK AND ISNTALLATIONS SHALL BOT IMPAIR THE PROPER FUNCTIONING OF THE EXISTING FACILITY. THE COMPLETED PROJECT SHALL BE A PROPERLY FUNCTIONING ENTITY THROUGHOUT. FURNISH ALL LABOR AND MATERIALS REQUIRED TO RELOCATE, REMOVE, REINSTALL, RECONNECT REPLACE, ETC. ANY EXISTING PIPING TO ACCOMMODATE THE WORK. CONTRACTOR SHOULD CONSIDER IN HIS BID ANY EXTRA WORK REQUIRED TO MINIMIZE SHUTDOWN TIME.
10. BEFORE DEMOLITION COMMENCES ON SITE, ALL EXISTING EQUIPMENT TO BE RETAINED AND REUSED WILL BE SURVEYED AND VALIDATED BY THE CONTRACTOR TO ESTABLISH CONDITION AND CAPACITIES. ANY EXISTING DAMAGE TO EQUIPMENT IS TO BE RECORDED AT THIS STAGE BY THE CONTRACTOR AND A FULL WRITTEN REPORT SUBMITED TO THE FACILITY REPRESENTATIVE FOR REVIEW. THE REPORT WILL INCLUDE PHOTOGRAPHIC EVIDENCE OF DAMAGE.
11. CONTRACTOR TO CROSS REFERENCE DEMOLITION AND NEW CONSTRUCTION DRAWINGS TO ENSURE CONSISTENCY IN DESIGN INTENT BEFORE PROCEEDING WITH ANY DEMOLITION WORK. ANY PIPE, VALVE, EQUIPMENT THAT IS MISTAKENLY DEMOLISHED SHALL BE RESTORED AT CONTRACTORS COST.
12. ALL POWER SUPPLIES TO EXISTING EQUIPMENT TO BE REMOVED SHALL BE ISOLATED AND MADE SAFE PER NEX PRIOR TO DEMOLITION STARTS. THIS PROCESS SHALL BE COORDINATED WITH FACILITY REPRESENTATIVES.
13. CONTRACTOR TO DO PRE-DEMOLITION SURVEY AND RED TAG UTILITIES FOR DEMOLITION. COORDIANTE WITH FACILITY REPRESENTATIVE ALL PROPOSED UTILITY SHUT DOWN AND ISOLATION PRIOR TO DEMOLITION.

APPLICABLE CODES AND DESIGN CONDITIONS

1. AMERICANS WITH DISABILITIES ACT (ADA).
2. NFPA 90A; STANDARD FOR THE INSTALLATION OF AIR-CONDITIONING AND VENTILATING SYSTEMS.
3. NFPA 90B: STANDARD FOR THE INSTALLATION OF WARM AIR HEATING AND AIR-CONDITIONING SYSTEMS.
4. NFPA 101: LIFE SAFETY CODE
5. ASHRAE 55 THERMAL ENVIRONMENTAL CONDITIONS FOR HUMAN OCCUPANCY.
6. ASHRAE 62.1 VENTILATION FOR ACCEPTABLE INDOOR AIR QUALITY.
8. 2022 CALIFORNIA MECHANICAL CODE
9. 2022 CALIFORNIA PLUMBING CODE
10. 2022 NATIONAL ELECTRICAL CODE
11. 2022 TITLE 24 REQUIREMENTS
12. CALGREEN STANDARDS

OUTDOOR DESIGN CONDITIONS:

LOCATION:
SUMMER: 98DB, 70WB
WINTER: 35DB
ELEVATION: 115 FEET

GENERAL NOTES

1. THE MECHANICAL PLANS ARE DIAGRAMMATIC IN NATURE AND ARE BASED ON ONE MANUFACTURER'S EQUIPMENT. THEY ARE NOT INTENDED TO SHOW EVERY ITEM IN ITS EXACT LOCATION. THE EXACT DIMENSIONS, OR ALL OF THE DETAILS FOR THE EQUIPMENT. THE MECHANICAL CONTRACTOR SHALL VERIFY THE ACTUAL DIMENSIONS OF THE EQUIPMENT AND ENSURE THAT IT WILL FIT IN THE AVAILABLE SPACE.
2. MECHANICAL CONTRACTOR RESPONSIBLE FOR INSTALLATION OF COMPLETED AND OPERATIONAL SYSTEMS WITH DUE RESPECT TO ALL APPLICABLE CODES AND AUTHORITIES HAVING JURISDICTION.
3. IT IS THE CONTRACTOR RESPONSIBILITY TO FIELD VERIFY ALL CONNECTION POINTS PRIOR TO INSTALL. NOT ALL CONNECTION SIZES ARE SHOWN, BUT THOSE THAT ARE APPROXIMATE AND TAKEN FROM EXISTING AS-BUILTS AND FIELD OBSERVATIONS.
4. COORDINATE PIPE ROUTING WITH DUCTWORK, SPRINKLER PIPING AND ELECTRICAL POWER/LIGHTING CIRCUITING AND STRUCTURAL MEMBERS PRIOR TO INSTALLATION.
5. CONTRACTORS TO VERIFY ALL GRADES, DIMENSIONS AND EXISTING CONDITIONS AT THE SITE BEFORE PROCEEDING WITH WORK. NOTIFY PRIME CONSULTANT OF ANY DISCREPANCIES BETWEEN DRAWINGS AND ACTUAL CONDITIONS BEFORE INSTALLATION.
6. ALL MECHANICAL EQUIPMENT CONTROLS SHALL MATCH TO WHAT IS EXISTING AT THE OCTA SANTA ANA BUS FACILITY.
7. COORDINATE INSTALLATION OF PIPING AND DUCTWORK WITH ELECTRICAL CONTRACTOR AND OTHER TRADES.
8. IF THERE IS A CONFLICT BETWEEN THE CONSTRUCTION DOCUMENTS AND SPECIFICATIONS, THE MOST STRINGENT WILL APPLY.
9. ALL EQUIPMENT SHALL BE INSTALLED IN STRICT ACCORDANCE WITH THE EQUIPMENT MANUFACTURERS. CONTRACTOR TO PROVIDE ALL FITTINGS, TRANSITIONS, DAMPERS, VALVES, AND OTHER DEVICES REQUIRED FOR A COMPLETE WORKABLE INSTALLATION.
10. PENETRATIONS OF DUCTS, PIPES, CONDUITS,ETC IN WALLS REQUIRING PROTECTED OPENINGS SHALL BE FIRE STOPPED, FIRE STOP MATERIAL, SHALL BE A UL/ULC-LISTED ASSEMBLY APPROPRIATE FOR FIRE OR SMOKE PENETRATIONS AS APPLICABLE AND AS APPROVED BY THE FIRE MARSHAL.
11. THE MECHANICAL CONTRACTOR SHALL PROVIDE AND INSTALL FIRE, SMOKE, OR COMBINATION SMOKE/FIRE DAMPERS AND ACCESS PANELS COMMENSURATE WITH THE RATING OF THE WALL IN ALL DUCTWORK THAT PENETRATES FIRE WALLS, FIRE BARRIERS, FIRE PARTITIONS, SMOKE BARRIERS AND SMOKE PARTITION IN ALL DUCTWORK THAT PENETRATES A HORIZONTAL OR VERTICAL FIRE PARTITION, OR AS OTHERWISE SHOWN ON THE DRAWINGS.
12. ALL BRANCH DUCTS SHALL HAVE VOLUME DAMPERS.
13. WHERE FLOW EXCEEDS 150 CFM, THE CONTRACTOR SHALL USE SMOOTH RADIUS ELBOWS OR TURNING VANES.
14. ALL DUCT JOINTS SHALL BE SEALED IN ACCORDANCE WITH SMACNA STANDARDS.
15. ALL DUCT DIMENSIONS ARE NET INSIDE VALUES. DIMENSIONS MAY BE CHANGED PROVIDED THAT THE NET FREE AREA IS MAINTAINED.
16. ALL CONCEALED DUCTWORK SHALL BE INSULATED WITH 1" FIBERGLASS INSULATING BLANKET WITH ALUMINUM FOIL FACING.
17. ALL DUCTWORK SHALL BE CONSTRUCTED, ERECTED AND TESTED IN ACCORDANCE WITH THE LOCAL REGULATIONS AND PROCEDURES DETAILED IN THE APPLICABLE STANDARDS ADOPTED BY THE SHEET METAL AND AIR CONDITIONING CONTRACTORS NATIONAL ASSOCIATION. (SMACNA).
18. ALL PIPE SHALL BE SUPPORTED FROM THE BUILDING STRUCTURE IN A NEAT AND WORKMANLIKE MANNER. THE USE OF WIRE OR METAL STRAPS TO SUPPORT PIPES WILL NOT BE PERMITTED. REFER TO SPECIFICATIONS FOR MINUMUM SPACING OF PIPE SUPPORTS.
19. THE HVAC SYSTEMS SHALL BE TESTED AND BALANCED BY AN INDEPENDENT AGENCY, UNDER THE SUPERVISION OF A LICENSED PROFESSIONAL ENGINEER. A SEALED TYPE WRITTEN REPORT SHALL BE SUBMITTED TO THE ARCHITECT/ENGINEER.
20. ALL EQUIPMENT, DUCTS PIPING, AND OTHER DEVICES AND MATERIALS INSTALLED OUTSIDE OF THE BUILDING OR OTHERWISE EXPOSED TO THE WEATHER SHALL BE COMPLETELY WEATHERPROOFED.
21. MECHANICAL EQUIPMENT, DUCTS AND PIPING ARE TO BE COORDINATED WITH STRUCTURAL JOISTS AND CROSS BRACING.
22. ALL EXPOSED PIPING IN OCCUPIED SPACES SUBJECT TO ARCHITECTURAL APPROVAL PRIOR TO INSTALLATION.

LICENSED PROFESSIONAL ENGINEER
SIYAR GALSTYAN
M-39730
EXP. 12/31/25
MECHANICAL
STATE OF CALIFORNIA

Stantec
801 S. Figueroa Street, Suite 300
Los Angeles, CA 90017

Copyright Reserved
This Contract or shall not be responsible for all dimensions. DO NOT SCALE THE DRAWING - in the event or omission shall be reported to Stantec without delay.
This drawing is the property of Stantec and shall not be reproduced in whole or in part. Reproduction or use for any purpose other than that authorized by Stantec is forbidden.

REVISION	DESCRIPTION	DATE
	100% RESUBMITTAL	5/13/2024
	100% CONSTRUCTION DRAWING SUBMITTAL	3/27/2024
	90% UPDATED CONSTRUCTION SUBMITTAL	2/13/2024
	90% CONSTRUCTION DRAWING SUBMITTAL	12/07/2023

REPLACEMENT OF MECHANICAL UNITS AT SANTA ANA BUS BASE
4301 W. MAC ARTHUR BLVD., SANTA ANA, CA

PROJECT NOTES AND SHEET INDEX

JOB #:	
DESIGN BY:	SG
DRAWN BY:	RW
CHECKED BY:	GY
DATE:	
SCALE:	12" = 1'-0"
SHEET:	M-002P

OCTA
ORANGE COUNTY TRANSPORTATION AUTHORITY
550 SOUTH MAIN STREET, ORANGE, CA

Autodesk Docs://2014233703_Santa_Ana_Bus/mech_SantaAnaBus_2014233703.rvt
5/8/2024 11:15:01 AM

FAN SCHEDULE

UNIT IDENTIFICATION									FAN WHEEL			FAN MOTOR				ELECTRICAL										
MARK	NUMBER	BUILDING	UNIT/AREA SERVED	APPLICATION	MAX AIRFLOW (CFM)	MIN AIRFLOW (CFM)	ESP (IN-WG)	DRIVE TYPE	TYPE	ARRANGEMENT	SPEED (RPM)	BHP	HP	SPEED (RPM)	DRIVE TYPE	V / PH	FLA	MCA	MOP	OPERATING WEIGHT (LBS.)	CURB ADAPTER REQUIRED	EXISTING CURB SIZE	NEW CURB SIZE	MANUFACTURER	MODEL NUMBER	NOTES
EF	4-1	OREPATIONS	OPER BLDG REST RM	EXHAUST	540	-	0.5	ECM	CENTRIFUGAL	UPBLAST	1,300	0.10	1/4	1,725	DIRECT	115 / 1	2.9	4.00	15	45	N	-	-	GREENHECK	CUE-099-VG	1-6, 9
EF	4-2	OPERATIONS	OPER BLDG MEN'S RM	EXHAUST	1,100	-	0.5	ECM	CENTRIFUGAL	UPBLAST	1,690	0.27	1/4	1,725	DIRECT	115 / 1	3.5	4.00	15	54	N	-	-	GREENHECK	CUE-100-VG	1-6, 9
EF	4-3	OPERATIONS	OPER BLDG ELEC RM 103	EXHAUST	700	-	0.5	ECM	CENTRIFUGAL	UPBLAST	1,330	0.13	1/4	1,725	DIRECT	115 / 1	3.5	4.00	15	54	N	-	-	GREENHECK	CUE-100-VG	1-6, 9
EF	4-4	OPERATIONS	OPER BLDG LOCKER	EXHAUST	320	-	0.5	ECM	CENTRIFUGAL	UPBLAST	1,525	0.08	1/10	1,725	DIRECT	115 / 1	1.5	2.00	15	34	N	-	-	GREENHECK	CUE-090-VG	1-6, 9
SF	4-1	OPERATIONS	ELEC RM 103	SUPPLY	700	-	0.37	ECM	CENTRIFUGAL	ROOF SUPPLY	681	0.10	1/4	1,725	BELT	115 / 1	5.8	7.25	15	175	N	-	-	GREENHECK	RSF-90-4	1-6, 8
EF	5-1	MAINTENANCE	RUNNING REPAIR RM 181	EXHAUST	40,000	20,000	1.0	VFD	CENTRIFUGAL	UPBLAST	951	hh	25	1,725	BELT	460 / 3	34.0	42.50	70	2,350	Y	72 x 72	66 x 66	GREENHECK	QEI-40	1-6, 7
EF	5-2	MAINTENANCE	RM 181	EXHAUST	30,000	15,000	1.0	VFD	CENTRIFUGAL	UPBLAST	969	14.11	15	1,725	BELT	460 / 3	21.0	26.20	45	1,880	Y	64 x 64	60 x 60	GREENHECK	QEI-36	1-6, 7
EF	5-3	MAINTENANCE	RM 178	EXHAUST	28,000	14,000	1.0	VFD	CENTRIFUGAL	UPBLAST	916	12.10	15	1,725	BELT	460 / 3	21.0	26.20	45	1,880	Y	64 x 64	60 x 60	GREENHECK	QEI-36	1-6, 7
EF	5-4	MAINTENANCE	RM 178	EXHAUST	28,000	14,000	1.0	VFD	CENTRIFUGAL	UPBLAST	916	12.10	15	1,725	BELT	460 / 3	21.0	26.20	45	1,880	Y	64 x 64	60 x 60	GREENHECK	QEI-36	1-6, 7
EF	5-5	MAINTENANCE	RM 178	EXHAUST	30,000	15,000	1.0	VFD	CENTRIFUGAL	UPBLAST	969	14.11	15	1,725	BELT	460 / 3	21.0	26.20	45	1,880	Y	64 x 64	60 x 60	GREENHECK	QEI-36	1-6, 7
EF	5-6	MAINTENANCE	STEAM CLEANER	EXHAUST	10,000	5,000	1.0	VFD	CENTRIFUGAL	UPBLAST	1,433	4.16	5	1,725	BELT	460 / 3	7.6	9.50	15	617	Y	40 x 40	38.5 x 38.5	GREENHECK	QEI-22	1-6, 7
EF	5-7	MAINTENANCE	PARTS RM 135	EXHAUST	5,950	-	0.5	VFD	CENTRIFUGAL	UPBLAST	888	1.75	2	1,725	BELT	460 / 3	3.4	4.25	15	165	N	-	-	GREENHECK	CUBE-220-20	1-6, 9
EF	5-8	MAINTENANCE	PARTS RM 135	EXHAUST	5,950	-	0.5	VFD	CENTRIFUGAL	UPBLAST	888	1.75	2	1,725	BELT	460 / 3	3.4	4.25	15	165	N	-	-	GREENHECK	CUBE-220-20	1-6, 9
EF	5-9	MAINTENANCE	PARTS RM 135	EXHAUST	5,950	-	0.5	VFD	CENTRIFUGAL	UPBLAST	888	1.75	2	1,725	BELT	460 / 3	3.4	4.25	15	165	N	-	-	GREENHECK	CUBE-220-20	1-6, 9
EF	5-10	MAINTENANCE	PARTS RM 135	EXHAUST	5,950	-	0.5	VFD	CENTRIFUGAL	UPBLAST	888	1.75	2	1,725	BELT	460 / 3	3.4	4.25	15	165	N	-	-	GREENHECK	CUBE-220-20	1-6, 9
EF	5-11	MAINTENANCE	JAN RM 219	EXHAUST	80	-	0.3	ECM	CENTRIFUGAL	UPBLAST	1,453	0.02	1/15	1,725	DIRECT	115 / 1	1.3	2.00	15	28	N	-	-	GREENHECK	CUE-060-VG	1-6, 9
(E) EF	*5-12*	MAINTENANCE	*MEN'S RM 214, WOMEN 213*	*EXHAUST*	*500*	-	*EXISTING TO REMAIN*														*N*	-	-	*DAYTON*	*5DVP0*	10
EF	5-13	MAINTENANCE	MEN'S RM 109	EXHAUST	750	-	0.6	ECM	CENTRIFUGAL	UPBLAST	1,435	0.16	1/4	1,725	DIRECT	115 / 1	3.5	4.00	15	54	N	-	-	GREENHECK	CUE-100-VG	1-6, 9
(E) EF	*5-14*	MAINTENANCE	*WOMEN/SH RM 115*	*EXHAUST*	*660*	-	*EXISTING TO REMAIN*														*N*	-	-	*DAYTON*	*20FT11*	10
(E) EF	*5-15*	MAINTENANCE	*JAN RM 114*	*EXHAUST*	*315*	-	*EXISTING TO REMAIN*														*N*	-	-	*DAYTON*	*5DVP0*	10
EF	5-16	MAINTENANCE	REBUILT RM 106	EXHAUST	6,200	3,100	0.5	VFD	CENTRIFUGAL	UPBLAST	838	1.60	2	1,725	BELT	460 / 3	3.4	4.25	15	165	N	-	-	GREENHECK	CUBE-240-20	1-6, 9
EF	5-17	MAINTENANCE	REBUILT RM 107	EXHAUST	6,200	3,100	0.5	VFD	CENTRIFUGAL	UPBLAST	838	1.60	2	1,725	BELT	460 / 3	3.4	4.25	15	165	N	-	-	GREENHECK	CUBE-240-20	1-6, 9
EF	5-18	MAINTENANCE	REBUILT RM 108	EXHAUST	6,200	3,100	0.5	VFD	CENTRIFUGAL	UPBLAST	838	1.60	2	1,725	BELT	460 / 3	3.4	4.25	15	165	N	-	-	GREENHECK	CUBE-240-20	1-6, 9
EF	5-19	MAINTENANCE	BREAK RM 121	EXHAUST	3,500	-	0.5	VFD	CENTRIFUGAL	UPBLAST	968	1.11	1 1/2	1,725	BELT	460 / 3	3.0	3.75	15	140	N	-	-	GREENHECK	CUBE-200-15	1-6, 9
EF	5-20	MAINTENANCE	CLEAN SHOP 141	EXHAUST	2,600	-	0.5	VFD	CENTRIFUGAL	UPBLAST	1,635	0.87	1	1,725	BELT	460 / 3	2.1	2.63	15	97	N	-	-	GREENHECK	CUBE-140-10	1-6, 9
EF	5-21	MAINTENANCE	MACHINE RM 144	EXHAUST	3,100	-	0.5	VFD	CENTRIFUGAL	UPBLAST	1,053	0.78	1	1,725	BELT	460 / 3	2.1	2.63	15	132	N	-	-	GREENHECK	CUBE-180-10	1-6, 9
EF	5-22	MAINTENANCE	MACHINE RM 145	EXHAUST	3,100	-	0.5	VFD	CENTRIFUGAL	UPBLAST	1,053	0.78	1	1,725	BELT	460 / 3	2.1	2.63	15	132	N	-	-	GREENHECK	CUBE-180-10	1-6, 9
(E) EF	*5-23*	MAINTENANCE	*COMP REP RM 143*	*EXHAUST*	*1,200*	-	*EXISTING TO REMAIN*														*N*	-	-	*DAYTON*	-	10
EF	5-24	MAINTENANCE	BLDG MAINT. RM 150	EXHAUST	2,330	-	0.5	ECM	CENTRIFUGAL	UPBLAST	1,501	0.64	3/4	1,725	DIRECT	115 / 1	8.8	11.00	15	76	N	-	-	GREENHECK	CUE-140-VG	1-6, 9
EF	5-25	MAINTENANCE	COMP EXCH. RM 148	EXHAUST	16,000	8,000	1.0	VFD	CENTRIFUGAL	UPBLAST	1,255	7.06	7 1/2	1,725	BELT	460 / 3	11.0	13.80	20	885	Y	46 x 46	46.5 x 46.5	GREENHECK	QEI-27	1-6, 7
EF	5-26	MAINTENANCE	REV. TOIL. RM 160/161	EXHAUST	300	-	0.5	ECM	CENTRIFUGAL	UPBLAST	1,621	0.10	1/10	1,725	DIRECT	115 / 3	1.5	2.00	15	34	N	-	-	GREENHECK	CUE-090-VG	1-6, 9
(E) EF	*5-27*	MAINTENANCE	*LOCKER RM 167*	*EXHAUST*	*140*	-	*EXISTING TO REMAIN*														*N*	-	-	*DAYTON*	*5DVN6*	10
EF	5-28	MAINTENANCE	BODY SHOP RM 174	EXHAUST	36,960	18,480	1.0	VFD	CENTRIFUGAL	UPBLAST	1,013	17.45	20	1,725	BELT	460 / 3	27.0	33.80	60	1,013	Y	64 x 64	64.5 x 64.5	GREENHECK	QEI-40	1-6, 7
EF	5-29	MAINTENANCE	STORAGE RM 155	EXHAUST	2,500	-	0.5	ECM	CENTRIFUGAL	UPBLAST	1,115	0.54	3/4	1,200	DIRECT	115 / 1	8.8	11.00	15	84	N	-	-	GREENHECK	CUE-160-VG	1-6
(E) EF	*5-30*	MAINTENANCE	*TEL RM 136*	*EXHAUST*	*285*	-	*EXISTING TO REMAIN*														*N*	-	-	*DAYTON*	*5DVP6*	10
EF	5-31	MAINTENANCE	ELEC RM 137	EXHAUST	3,000	-	0.65	ECM	CENTRIFUGAL	UPBLAST	1,406	1.07	2	1,725	DIRECT	460 / 3	3.2	4.00	15	119	N	-	-	GREENHECK	CUE-160-VG	1-6, 9
EF	5-32	MAINTENANCE	LUBE RM 138	EXHAUST	410	-	0.5	ECM	CENTRIFUGAL	UPBLAST	1,621	0.10	1/10	1,725	DIRECT	115 / 3	1.5	2.00	15	34	N	-	-	GREENHECK	CUE-090-VG	1-6, 9
EF	5-33	MAINTENANCE	C.A. RM 139	EXHAUST	6,500	-	1.0	VFD	CENTRIFUGAL	UPBLAST	1,185	2.78	3	1,725	BELT	460 / 3	4.8	6.00	15	203	N	-	-	GREENHECK	CUBE-240HP-30	1-6
EF	5-34	MAINTENANCE	ELEC RM 185	EXHAUST	2,850	-	0.5	ECM	CENTRIFUGAL	UPBLAST	1,312	0.87	2	1,725	DIRECT	460 / 3	3.2	4.00	15	119	N	-	-	GREENHECK	CUE-160-VG	1-6, 9
EF	5-35	MAINTENANCE	ELEC RM 184	EXHAUST	1,300	-	0.63	ECM	CENTRIFUGAL	UPBLAST	1,425	0.33	1/2	1,450	DIRECT	115 / 1	6.4	8.00	15	37	N	-	-	GREENHECK	CUE-130-VG	1-6, 9
(E) EF	*5-36*	MAINTENANCE	*ELEC RM 220*	*EXHAUST*	-	-	*EXISTING TO REMAIN*														*N*	-	-	*DAYTON*	*4HZ45G*	10
EF	5-37	MAINTENANCE	ENG. DYN. RM 103	EXHAUST	15,000	7,500	1.0	VFD	CENTRIFUGAL	UPBLAST	1,191	6.15	7 1/2	1,725	BELT	460 / 3	11.0	13.80	20	886	Y	46 x 46	46.5 x 46.5	GREENHECK	QEI-27	1-6, 9
EF	5-38	MAINTENANCE	TRAN DYN. RM 105	EXHAUST	850	-	0.5	ECM	CENTRIFUGAL	UPBLAST	1,448	0.17	1/4	1,725	DIRECT	115 / 1	3.5	4.00	15	54	N	-	-	GREENHECK	CUE-100-VG	1-6, 9
EF	5-39	MAINTENANCE	EQUIP. STOR. RM 129	EXHAUST	375	-	0.5	ECM	CENTRIFUGAL	UPBLAST	1,525	0.10	1/6	1,725	DIRECT	115 / 1	2.3	3.00	15	40	N	-	-	GREENHECK	CUE-095-VG	1-6, 9
EF	5-40	MAINTENANCE	LOADING ABY RM 170	EXHAUST	1,100	-	0.5	ECM	CENTRIFUGAL	UPBLAST	1,328	0.22	1/4	1,400	DIRECT	115 / 1	3.5	4.00	15	57	N	-	-	GREENHECK	CUE-120-VG	1-6, 9
EF	5-41	MAINTENANCE	UPHOLSTRY SHOP RM 151	EXHAUST	990	-	0.5	ECM	CENTRIFUGAL	UPBLAST	984	0.17	1/4	1,000	DIRECT	115 / 1	3.5	4.00	15	72	N	-	-	GREENHECK	CUE-140-VG	1-6, 9
EF	5-42	MAINTENANCE	FUEL RM 102	EXHAUST	650	-	1.0	ECM	CENTRIFUGAL	UPBLAST	1,633	0.18	1/4	1,770	DIRECT	115 / 1		7.25	15	95	N	-	-	GREENHECK	USF-8-VG	1-6, 9
(E) EF	*5-43*	MAINTENANCE	*PAINT BOOTH*	*EXHAUST*	-	-	*EXISTING TO REMAIN*														N	-	-	*NEW YORK BLOWER*	*PLR-33*	10
SF	5-1	MAINTENANCE	PARTS RM 135	SUPPLY	7,330	-	1.0	VFD	CENTRIFUGAL	ROOF SUPPLY	564	2.52	3	1,725	BELT	460 / 3	4.8	6.00	15	766	N	-	-	GREENHECK	RSF-200-30	1-6, 8
SF	5-2	MAINTENANCE	PARTS RM 135	SUPPLY	7,330	-	1.0	VFD	CENTRIFUGAL	ROOF SUPPLY	564	2.52	3	1,725	BELT	460 / 3	4.8	6.00	15	766	N	-	-	GREENHECK	RSF-200-30	1-6, 8
SF	5-3	MAINTENANCE	PARTS RM 135	SUPPLY	7,330	-	1.0	VFD	CENTRIFUGAL	ROOF SUPPLY	564	2.52	3	1,725	BELT	460 / 3	4.8	6.00	15	766	N	-	-	GREENHECK	RSF-200-30	1-6, 8
SF	5-4	MAINTENANCE	REBUILT RM 106	SUPPLY	9,200	-	1.0	VFD	CENTRIFUGAL	ROOF SUPPLY	605	3.87	5	1,725	BELT	460 / 3	7.6	9.50	15	783	N	-	-	GREENHECK	RSF-200-50	1-6, 8
SF	5-5	MAINTENANCE	BRAKE RM 121	SUPPLY	3,200	-	1.0	VFD	CENTRIFUGAL	ROOF SUPPLY	979	1.42	1.5	1,752	BELT	460 / 3	3.0	3.75	15	307	N	-	-	GREENHECK	RSF-120-15	1-6, 8
SF	5-6	MAINTENANCE	CLEAN SHOP RM 141	SUPPLY	2,400	-	1.0	VFD	CENTRIFUGAL	ROOF SUPPLY	896	0.86	1	1,725	BELT	460 / 3	2.1	2.63	15	302	Y	30 x 30	34 x 34	GREENHECK	RSF-120-10	1-6, 8
(E) SF	*5-7*	MAINTENANCE	*MECH SHOP RM 144*	*EXHAUST*	*3,000*	-	*EXISTING TO REMAIN*														*N*	-	-	*DAYTON*	*5AU56*	10
SF	5-8	MAINTENANCE	COMP. SHOP. RM 143	SUPPLY	1,300	-	1.0	VFD	CENTRIFUGAL	ROOF SUPPLY	1,274	0.57	3/4	1,725	BELT	460 / 3	1.6	2.00	15	199	N	-	-	GREENHECK	RSF-90-7	1-6, 8
SF	5-9	MAINTENANCE	BLDG MAINT. RM 150	SUPPLY	4,000	-	1.0	VFD	CENTRIFUGAL	ROOF SUPPLY	855	1.93	2	1,725	BELT	460 / 3	3.4	4.25	15	427	N	-	-	GREENHECK	RSF-150-20	1-6, 8
SF	5-10	MAINTENANCE	STORAGE RM 155	SUPPLY	2,500	-	1.0	VFD	CENTRIFUGAL	ROOF SUPPLY	905	0.92	1	1,725	BELT	460 / 3	2.1	2.63	15	302	Y	30 x 30	34 x 34	GREENHECK	RSF-120-10	1-6, 8
(E) SF	*5-11*	MAINTENANCE	*ELEC RM 137*	*EXHAUST*	*3,000*	-	*EXISTING TO REMAIN*														*N*	-	-	*DAYTON*	*SAU56*	10
SF	5-12	MAINTENANCE	ELEC RM 185	SUPPLY	850	-	0.5	VFD	CENTRIFUGAL	ROOF SUPPLY	844	0.18	1/2	1,725	BELT	460 / 3	1.1	1.38	15	194	N	-	-	GREENHECK	RSF-90-5	1-6, 8
SF	5-13	MAINTENANCE	ELEC RM 184	SUPPLY	1,200	-	0.8	VFD	CENTRIFUGAL	ROOF SUPPLY	1,147	0.43	1/2	1,725	BELT	460 / 3	1.1	1.38	15	196	N	-	-	GREENHECK	RSF-90-5	1-6, 8
SF	5-14	MAINTENANCE	ELEC RM 220	SUPPLY	3,100	-	1.0	VFD	CENTRIFUGAL	ROOF SUPPLY	968	1.34	1 1/2	1,725	BELT	460 / 3	3.0	3.75	15	307	N	-	-	GREENHECK	RSF-120-5	1-6, 8
SF	5-15	MAINTENANCE	TRAN DYN. RM 105	SUPPLY	820	-	0.4	VFD	CENTRIFUGAL	ROOF SUPPLY	764	0.15	1/2	1,725	BELT	460 / 3	1.1	1.38	15	194	N	-	-	GREENHECK	RSF-90-5	1-6, 8
SF	5-16	MAINTENANCE	LOADING ABY RM 170	SUPPLY	1,200	-	0.8	VFD	CENTRIFUGAL	ROOF SUPPLY	1,147	0.43	1/2	1,725	BELT	460 / 3	1.1	1.38	15	196	N	-	-	GREENHECK	RSF-90-5	1-6, 9
EF	6-1	FUEL/BRAKE	BRAKE/BST RM 114/001	EXHAUST	31,000	-	1.0	VFD	CENTRIFUGAL	UPBLAST	996	15.20	20	1,725	BELT	460 / 3	27.0	33.80	60	1,900	Y	64 x 64	60 x 60	GREENHECK	QEI-36	1-6, 7
EF	6-2	FUEL/BRAKE	FUEL AREA RM 115	EXHAUST	26,000	-	1.0	VFD	CENTRIFUGAL	UPBLAST	1,130	13.44	15	1,725	BELT	460 / 3	21.0	26.20	45	1,610	Y	58 x 58	54.5 x 54.5	GREENHECK	QEI-33	1-6, 7
EF	6-3	FUEL/BRAKE	BODY/SHOP 118/116	EXHAUST	18,000	-	1.0	VFD	CENTRIFUGAL	UPBLAST	1,384	9.21	10	1,725	BELT	460 / 3	14.0	17.50	30	912	Y	46 x 46	46.5 x 46.5	GREENHECK	QEI-27	1-6, 7
EF	6-4	FUEL/BRAKE	MEN'S RM	EXHAUST	120	-	0.25	ECM	CENTRIFUGAL	UPBLAST	1,691	0.03	1/15	1,725	DIRECT	115 / 1	1.3	2.00	15	28	N	-	-	GREENHECK	CUE-060-VG	1-6, 9
(E) EF	*6-5*	FUEL/BRAKE	*WOMEN'S RM*	*EXHAUST*	*100*	-	*EXISTING TO REMAIN*														*N*	-	-	*DAYTON*	*5DVN8*	10
EF	6-6	FUEL/BRAKE	LOCKER/LAUNDRY	EXHAUST	230	-	0.5	ECM	CENTRIFUGAL	UPBLAST	1,638	0.06	1/10	1,725	DIRECT	115 / 1	1.5	2.00	15	37	N	-	-	GREENHECK	CUE-080-VG	1-6, 9
EF	6-7	FUEL/BRAKE	C.A. 111/TEL. 112	EXHAUST	7,000	-	0.5	VFD	CENTRIFUGAL	UPBLAST	1,180	2.55	3	1,725	BELT	460 / 3	4.8	6.00	15	203	N	-	-	GREENHECK	CUBE-240HP-30	1-6, 9
EF	6-8	FUEL/BRAKE	FLUID TANK 110/GREESE TANK 109	EXHAUST	440	-	0.25	ECM	CENTRIFUGAL	UPBLAST	1,388	0.06	1/10	1,725	DIRECT	115 / 1	1.5	2.00	15	34	N	-	-	GREENHECK	CUE-90-VG	1-6, 9
EF	6-9	FUEL/BRAKE	FUEL RM 115	EXHAUST	1,500	-	0.75	ECM	CENTRIFUGAL	UPBLAST	1,268	0.38	1/2	1,300	DIRECT	115 / 1	6.4	8.00	15	73	N	-	-	GREENHECK	CUE-140-VG	1-6, 9
SF	6-1	FUEL/BRAKE	TIRE BAY RM 116	SUPPLY	9,000	-	1.0	VFD	CENTRIFUGAL	ROOF SUPPLY	BELT	3.69	5	1,725	BELT	460 / 3	7.6	9.50	15	783	N	-	-	GREENHECK	RSF-200-50	1-6, 8
SF	6-2	FUEL/BRAKE	BASEMENT 001	SUPPLY	4,000	-	1.0	VFD	CENTRIFUGAL	ROOF SUPPLY	855	1.93	2	1,725	BELT	460 / 3	3.4	4.25	15	427	N	-	-	GREENHECK	RSF-150-20	1-6, 8
EF	7-1	BUS WASH	BUS WASH	EXHAUST	8,000	-	0.5	VFD	CENTRIFUGAL	UPBLAST	601	1.59	2	1,725	BELT	460 / 3	3.4	4.25	15	206	N	-	-	GREENHECK	CUBE-300-20	1-6, 7
EF	7-2	BUS WASH	BUS WASH	EXHAUST	4,000	-	0.5	VFD	CENTRIFUGAL	UPBLAST	1,321	1.52	2	1,725	BELT	460 / 3	3.4	4.25	15	141	N	-	-	GREENHECK	CUBE-180-20	1-6, 9
EF	8-1	DETAILING	DETAILING/CLEANIN EQUIP. RM	EXHAUST	750	-	0.5	ECM	CENTRIFUGAL	UPBLAST	1,502	0.16	1/4	1,725	DIRECT	115 / 1	2.9	4.00	15	45	N	-	-	GREENHECK	CUE-099-VG	1-6, 9

NOTES:
1. CONTRACTOR TO VERIFY EXISTING ROOF CURB SIZE AND PROVIDE CURB ADAPTER AS NECESSARY FOR NEW FAN.
2. CONTRACTOR TO VERIFY THAT EXISTING ELECTRICAL SERVICE IS ADEQUATE FOR NEW FAN.
3. PROVIDE WITH DISCONNECT, BY DIV 26.
4. PROVIDE WITH BACKDRAFT DAMPER. LISTED MAX ETERNAL STATIC PRESSURE [EXCLUDES/INCLUDES] DAMPER. - FOR EXHAUST FANS ONLY.
5. PROVIDE WITH NEMA PREMIUM EFFICIENCY MOTORS.
6. PROVIDE WITH WEATHERPROOF CONSTRUCTION.
7. EQUIPMENT FURNISHED WITH BACK DRAFT DAMPER, DUCT ADAPTERS, TWO SPEED, 2-WINDING FAN MOTOR. INTERLOCK WITH FUTURE LNG SYSTEM.
8. PROVIDE WITH DUCT ADAPTER, BACKDRAFT DAMPER, DISCONNECT SWITCH, SMOKE DETECTOR, S'TAT AND FILTERS.
9. EQUIPMENT BACKDRAFT DAMPER AND DISCONNECT SWITCH.
10. EXISTING EQUIPMENT TO REMAIN.

Stantec
801 S. Figueroa Street, Suite 300
Los Angeles, CA 90017

Copyright Reserved
The Contractor shall verify and be responsible for all dimensions. DO NOT scale the drawing - any errors or omissions shall be reported to Stantec without delay.
The Copyrights to all designs and drawings are the property of Stantec. Reproduction or use for any purpose other than that authorized by Stantec is forbidden.

REVISION	DESCRIPTION	DATE
	90% CONSTRUCTION DRAWING SUBMITTAL	12/07/2023
	90% UPDATED CONSTRUCTION SUBMITTAL	2/13/2024
	100% CONSTRUCTION DRAWING SUBMITTAL	3/27/2024
	100% RESUBMITTAL	5/13/2024

REPLACEMENT OF MECHANICAL UNITS AT SANTA ANA BUS BASE
4301 W. MAC ARTHUR BLVD., SANTA ANA, CA

FAN SCHEDULE

JOB #:
DESIGN BY: SG
DRAWN BY: RW
CHECKED BY: GY
DATE:
SCALE:
SHEET: **M-003P**

LICENSED PROFESSIONAL ENGINEER
SEVAK GALSTYAN
M 39730
EXP. 12/31/25
MECHANICAL
STATE OF CALIFORNIA

OCTA
ORANGE COUNTY
TRANSPORTATION AUTHORITY
550 SOUTH MAIN STREET, ORANGE, CA

PACKAGED ROOFTOP UNIT SCHEDULE

UNIT IDENTIFICATION					FAN DATA				COIL DATA												EFFICIENCY			ELECTRICAL				UNIT DIMENSIONS							
					INDOOR			OUTDOOR			DX COOLING COIL							HEATING COIL																
MARK	NUMBER	TYPE	BUILDING	AREA SERVED	FAN DRIVE TYPE	DESIGN AIRFLOW (CFM)	DESIGN ESP (INWC)	FAN DRIVE TYPE	AMBIENT DRY BULB	MINIMUM OUTSIDE AIR (CFM)	REFRIG.	TOTAL COOLING CAPACITY (BTU/H)	SENS. COOLING CAPACITY...	ENTERING DB (F)	ENTERING WB (F)	LEAVING DB (F)	LEAVING WB (F)	OUTPUT HEATING CAPACITY	ENTERIN G DB (F)	LEAVING DB (F)	HSPF	EER	SEER	V / PH	SYSTE M POWER (kW)	MCA	MOP	OPERATING WEIGHT (LBS)	HEIGHT (FT)	WIDTH (FT)	LENGTH (FT)	CURB ADAPTER MODEL	MANUFACTURER	MODEL	NOTES
RTU	4-1	PACKAGED RTU	OPERATIONS	NORTH	VARIABLE DIRECT	4,830	1	DIRECT	95	740	R-410A	178,000	125500	80	67	55	54	202	70	108	-	11	14.6	460 / 3	17.4	41.0	50	1,925	5	7.5	10.5	CA-TRN-593-TRN-592-...	TRANE	YSJ1804S0L	ALL
RTU	4-2	PACKAGED RTU	OPERATIONS	CENTRAL NORTH	VARIABLE DIRECT	2,350	1	DIRECT	95	100	R-410A	74,000	55,000	80	67	56	56	65	70	95	-	11	14.6	460 / 3	7.1	18.0	20	968	4.2	4.4	7.3	-	TRANE	YSJ072A4S0L	ALL
RTU	4-3	PACKAGED RTU	OPERATIONS	CENTRAL SOUTH	VARIABLE DIRECT	4,100	1	DIRECT	95	885	R-410A	118,000	91,000	80	67	58	57	121	70	97	-	11	14.6	460 / 3	11.8	29.0	40	1,020	4.2	4.4	7.3	-	TRANE	YSJ120A4S0L	ALL
RTU	4-4	PACKAGED RTU	OPERATIONS	SOUTH	VARIABLE DIRECT	4,000	1	DIRECT	95	940	R-410A	119,000	92,000	80	67	58	57	121	70	97	-	11	14.6	460 / 3	10.5	25.0	30	995	4.2	4.4	7.3	-	TRANE	YSJ102A4S0L	ALL
RTU	5-1	PACKAGED RTU	MAINTENANCE	2ND FLR OFFICES	VARIABLE DIRECT	5,910	1	DIRECT	95	830	R-410A	182,080	149,000	75	61	50	49	202	70	101	-	10.8	14.0	460 / 3	19.7	49.0	60	1,954	5	7.5	10.5	-	TRANE	YSJ210A4S0L	ALL
RTU	5-2	PACKAGED RTU	MAINTENANCE	BREAK ROOM	VARIABLE DIRECT	5,040	1	DIRECT	95	1,115	R-410A	179,000	128,000	80	67	56	55	202	70	104	-	10.8	14.0	460 / 3	17.6	41.0	50	1,924	5	7.5	10.5	-	TRANE	YSJ1804S0L	ALL
RTU	5-3	PACKAGED RTU	MAINTENANCE	REVENUE OFFICES	VARIABLE DIRECT	5,400	1	DIRECT	95	1,250	R-410A	180,000	132,000	80	67	56	55	202	70	104	-	10.8	14.0	460 / 3	17.6	41.0	50	1,924	5	7.5	10.5	-	TRANE	YSJ1804S0L	ALL
RTU	5-4	PACKAGED AC	MAINTENANCE	OFFICE	VARIABLE DIRECT	770	1	DIRECT	95	30	R-410A	23,800	6,600	80	67	55	53	23,200	70	95	7	11	13.4	208 / 1	1.8	20.6	30	328	3.3	3.75	4.9	CA-TRN-1213-TRN-59...	TRANE	4WCC4048E1000A	ALL
RTU	5-5	PACKAGED AC	MAINTENANCE	OFFICE	VARIABLE DIRECT	770	1	DIRECT	95	50	R-410A	23,800	9,300	80	67	55	53	23,200	70	95	7	11	13.4	208 / 1	1.8	20.6	30	328	3.3	3.75	4.9	CA-TRN-1213-TRN-59...	TRANE	4WCC4048E1000A	ALL
RTU	6-1	PACKAGED AC	FUEL/BRAKE	OFFICE	VARIABLE DIRECT	1,570	0.5	DIRECT	95	135	R-410A	47,000	42,000	80	67	55	53	45,000	70	95	7	11	13.4	208 / 1	4.1	31.9	50	425	4.1	4	5.1	CA-TRN-1235-TRN-5750	TRANE	4WCC4048E1000A	ALL

NOTES:
1. CONTRACTOR TO VERIFY EXISTING ROOF CURB SIZE AND PROVIDE CURB ADAPTER MODEL PER SCHEDULE FOR NEW EQUIPMENT.
2. PROVIDE WITH INTERMITTENT IGNITION DEVICE (IID)
3. FILTERS ARE TO BE PROVIDED WITH PRE-FILTER. MAXIMUM PRESSURE DROP SHALL BE BASED ON TOTAL PRESSURE DROP ACROSS THE FILTER BANK WITH DIRTY FILTERS.
4. PROVIDE WITH 100% MODULATING DRY-BULB TYPE AIR ECONOMIZER.
5. DISCONNECT PROVIDED BY DIVISION 26 CONTRACTOR.
6. PROVIDE SCCR RATINGS GREATER THAN FAULT AMPS SHOWN ON ELECTRICAL DRAWINGS.
7. PROVIDE SUPPLY AND POWERED EXHAUST FANS WITH VFD- BY RTU MANUFACTURER.
8. UNIT SHALL COMPLY WITH ECONOMIZER FAULT DETECTION AND DIAGNOSTICS (FDD) REQUIREMENTS PER CALIFORNIA TITLE 24, PART 6.
9. PROVIDE WITH DUCT SMOKE DETECTOR FOR AUTOMATIC UNIT SHUT OFF. FURNISHED AND WIRED BY DIV 26 CONTRACTOR. ISNTALLED BY DIV 23 CONTRACTOR.
10. LISTED UNIT OPERATING WEIGHT EXCLUDES CURB.
11. UNIT TO BE BACNET COMPATIBLE AND SHALL BE TIED TO THE EXISTING ENERGY MANAGEMENT CONTROL SYSTEM (EMCS).
12. PROVIDE VIBRATION ISOLATION AND SEISMIC RESTRAINT.
13. PROVIDE INVERTER-READY NEMA PREMIUM EFFICIENCY MOTOR WITH SHAFT GROUNDING SYSTEM.
14. PROVIDE A PROGRAMMABLE THERMOSTAT WITH TEMPERATURE SETPOINTS FOR AT LEAST FOUR SCHEDULING PERIODS WITHIN 24 HOURS.
15. PROVIDE CONDENSER COIL GAURD.
16. PROVIDE WITH 115V FIELD POWERED SERVICE OUTLET.
17. PROVIDE WITH MERV-13 FILTER.

MAKEUP AIR UNIT SCHEDULE

UNIT IDENTIFICATION					SUPPLY FAN					HEATING			ELECTRICAL				PHYSICAL CHARACTERISTICS							
MARK	NUMBER	TYPE	BUILDING	AREA SERVED	SUPPLY AIR VOLUME (CFM)	TOTAL STATIC PRESSURE (IN. W.C.)	MOTOR TYPE	MOTOR POWER (HP)	MOTOR SPEED (RPM)	MAX INPUT (BTU/H)	FUEL TYPE	SUPPLY GAS PRESSURE (INWC)	UNIT VOLT / PH	FLA	CONTROL V / PH	CONTROL TRANSFORMER (VA)	UNIT OPERATING WEIGHT (LBS)	HEIGHT (IN)	WIDTH (IN)	LENGTH (IN)	CURB ADAPTER MODEL	MANUFACTURER	MODEL	NOTES
MAU	5-1	MAKEUP AIR UNIT	MAINTENANCE	RUNNING REPAIR, RM 181	20,000	3	BELT	20	1,800	838,000	NATURAL GAS	10 - 14	460 / 3	28.1	115 / 1	500	2,699	63	91	186	VIBREX SRC-125	TRANE	DFOA-125-HLB	1-10
MAU	5-2	MAKEUP AIR UNIT	MAINTENANCE	RUNNING REPAIR, RM 179	15,000	3	BELT	15	1,800	668,000	NATURAL GAS	10 - 14	460 / 3	22.1	115 / 1	500	1,958	51	78	166	VIBREX SRC-122	TRANE	DFOA-122-HRB	1-10
MAU	5-3	MAKEUP AIR UNIT	MAINTENANCE	RUNNING REPAIR, RM 179	14,000	3	BELT	15	1,800	623,000	NATURAL GAS	10 - 14	460 / 3	22.1	115 / 1	500	1,958	51	78	166	VIBREX SRC-122	TRANE	DFOA-122-HRB	1-10
MAU	5-4	MAKEUP AIR UNIT	MAINTENANCE	RUNNING REPAIR, RM 179	14,000	3	BELT	15	1,800	623,000	NATURAL GAS	10 - 14	460 / 3	22.1	115 / 1	500	1,958	51	78	166	VIBREX SRC-122	TRANE	DFOA-122-HRB	1-10
MAU	5-5	MAKEUP AIR UNIT	MAINTENANCE	RUNNING REPAIR, RM 179	15,000	3	BELT	15	1,800	668,000	NATURAL GAS	10 - 14	460 / 3	22.1	115 / 1	500	1,958	51	78	166	VIBREX SRC-122	TRANE	DFOA-125-HRB	1-10
MAU	5-6	MAKEUP AIR UNIT	MAINTENANCE	BODY SHOP, RM 174	17,700	3	BELT	15	1,800	788,000	NATURAL GAS	10 - 14	460 / 3	22.1	115 / 1	500	2,699	63	91	186	VIBREX SRC-125	TRANE	DFOA-125-HRB	1-10
MAU	5-7	MAKEUP AIR UNIT	MAINTENANCE	COMP. EXH., RM 148	6,000	3	BELT	7 1/2	1,800	223,000	NATURAL GAS	10 - 14	460 / 3	12.1	115 / 1	500	1,187	39	52	140	VIBREX SRC-115	TRANE	DFOA-115-HRB	1-10
MAU	5-8	MAKEUP AIR UNIT	MAINTENANCE	CORR., RM 101	2,400	3	BELT	3	1,800	175,000	NATURAL GAS	10 - 14	460 / 3	5.9	115 / 1	500	1,187	39	52	140	VIBREX SRC-109	TRANE	DFOA-109-HRB	1-10
(E) MAU	*5-9*	*MAKEUP AIR UNIT*	*MAINTENANCE*	*PAINT BOOTH*	*37,800*	*2*	-	-	-	-	-	-	-	-	-	-	-	-	-	-	-	-	-	*11*

NOTES:
1. PROVIDE WITH INLET HOOD
2. PROVIDE WITH SHUTOFF DAMPERS
3. PROVIDE WITH VIBRATION ISOLATORS
4. PROVIDE WITH PAINTED CABINET / ACCESSORIES
5. PROVIDE WITH DISCONNECT SWITCH BY DIVISION 26.
6. PROVIDE WITH REMOTE CONTROL STATION
7. PROVIDE WITH MRT TOUCH REMOTE CONTROL STATION.
8. PROVIDE WITH G-90 GALVANIZED STEEL FILTER.
9. CONTRACTOR TO VERIFY EXISTING ROOF CURB SIZE AND PROVIDE CURB ADAPTER MODEL PER SCHEDULE FOR NEW EQUIPMENT.
10. PROVIDE WITH EMERGENCY POWER OFF SWITCH.
11. EXISTING EQUIPMENT TO REMAIN.

LICENSED PROFESSIONAL ENGINEER SEVAK GALSTYAN M-39730 EXP. 12/31/25 MECHANICAL STATE OF CALIFORNIA

IFB 4-2550 EXHIBIT B

Stantec
801 S. Figueroa Street, Suite 300
Los Angeles, CA 90017

Copyright Reserved
The Contractor shall verify and be responsible for all dimensions. DO NOT scale the drawing - use dimensions as indicated or as required by Engineer without delay.
This drawing is the property of the Consultant and may not be reproduced in whole or in part without the consent of the Consultant. Reproduction or use for any purpose other than that authorized by Stantec is forbidden.

REVISION	DESCRIPTION	DATE
	100% RESUBMITTAL	5/13/2024
	100% CONSTRUCTION DRAWING SUBMITTAL	3/27/2024
	90% UPDATED CONSTRUCTION SUBMITTAL	2/13/2024
	90% CONSTRUCTION DRAWING SUBMITTAL	12/07/2023

REPLACEMENT OF MECHANICAL UNITS AT SANTA ANA BUS BASE
4301 W. MAC ARTHUR BLVD., SANTA ANA, CA

ROOFTOP AND MAKEUP AIR UNITS SCHEDULES

JOB #:	
DESIGN BY:	SG
DRAWN BY:	RW
CHECKED BY:	GY
DATE:	
SCALE:	
SHEET:	M-004P

OCTA
ORANGE COUNTY TRANSPORTATION AUTHORITY
550 SOUTH MAIN STREET, ORANGE, CA

Autodesk Docs://2014233703_Santa_Ana_Bus/mech_SantaAnaBus_2014233703.rvt
5/8/2024 11:15:03 AM

PACKAGED HEAT PUMP SCHEDULE

UNIT IDENTIFICATION					FAN DATA			COIL DATA												EFFICIENCY		ELECTRICAL				UNIT DIMENSIONS							
											COOLING MODE						HEATING MODE																
MARK	NUMBER	TYPE	BUILDING	AREA SERVED	FAN DRIVE TYPE	DESIGN AIRFLOW (CFM)	DESIGN ESP (INWC)	AMBIENT DRY BULB (F)	MIN. OUTSIDE AIR (CFM)	REFRIG.	TOTAL COOLING CAPACITY (MBH)	POWER INPUT (kW)	ENTERING DB (F)	ENTERING WB (F)	LEAVING DB (F)	LEAVING WB (F)	OUTPUT HEATING CAPACITY	POWER INPUT (kW)	ENTERING DB (F)	LEAVING DB (F)	EER (BTU/WATT-HR)	SEER (BTU/WATT-HR)	V / PH	MCA	MOP	FILTER RATING	OPERATING WEIGHT (LBS)	HEIGHT (FT)	WIDTH (FT)	LENGTH (FT)	CURB ADAPTER MODEL	MANUFACTURER	MODEL	NOTES
HP	5-1	HEAT PUMP	MAINTENANCE	CONTROL	4-SPEED DIRECT	770	0.5	95	30	R-410A	23,800	2.09	76	62	55	54	23,200	1.95	70	95	11	13.4	208 / 1	20.6	30	MERV 13	328	46	45	52	-	TRANE	4WCC4024E1000A	ALL
HP	6-1	HEAT PUMP	FUEL/BRAKE	BLDG. OFFICE	4-SPEED DIRECT	770	0.5	95	30	R-410A	23,800	2.09	74	61	55	54	23,200	1.95	70	95	11	13.4	208 / 1	20.6	30	MERV 13	328	46	45	52	CA-TRN-1213-TRN-590-9	TRANE	4WCC4024E1000A	ALL

NOTES:
1. CONTRACTOR TO VERIFY EXISTING ROOF CURB SIZE AND PROVIDE CURB ADAPTER AS NECESSARY FOR NEW EQUIPMENT.
2. PROVIDE WITH INTERMITTENT IGNITION DEVICE (IID)
3. FILTERS ARE TO BE PROVIDED WITH PRE-FILTER. MAXIMUM PRESSURE DROP SHALL BE BASED ON TOTAL PRESSURE DROP ACROSS THE FILTER BANK WITH DIRTY FILTERS.
4. PROVIDE WITH 100% MODULATING DRY-BULB TYPE AIR ECONOMIZER.
5. DISCONNECT PROVIDED BY DICISION 26 CONTRACTOR.
6. PROVIDE SCCR RATINGS GREATER THAN FAULT AMPS SHOWN ON ELECTRICAL DRAWINGS.
7. PROVIDE SUPPLY AND POWERED EXHAUST FANS WITH VFD- BY RTU MANUFACTURER.
8. UNIT SHALL COMPLY WITH ECONOMIZER FAULT DETECTION AND DIAGNOSTICS (FDD) REQUIREMENTS PER CALIFORNIA TITLE 24, PART 6.
9. PROVIDE WITH DUCT SMOKE DETECTOR FOR AUTOMATIC UNIT SHUT OFF. FURNISHED AND WIRED BY DIV 26 CONTRACTOR. ISNTALLED BY DIV 23 CONTRACTOR.
10. LISTED UNIT OPERATING WEIGHT EXCLUDES CURB.
11. UNIT TO BE BACNET COMPATIBLE AND SHALL BE TIED TO THE EXISTING ENERGY MANAGEMENT CONTROL SYSTEM (EMCS).
12. PROVIDE VIBRATION ISOLATION AND SEISMIC RESTRAINT.
13. PROVIDE INVERTER-READY NEMA PREMIUM EFFICIENCY MOTOR WITH SHAFT GROUNDING SYSTEM.
14. PROVIDE A PROGRAMMABLE THERMOSTAT WITH TEMPERATURE SETPOINTS FOR AT LEAST FOUR SCHEDULING PERIODS WITHIN 24 HOURS.
15. PROVIDE CONDENSER COIL GAURD.
16. PROVIDE WITH 115V FIELD POWERED SERVICE OUTLET.

PACKAGED AIR CONDITIONER SCHEDULE

UNIT IDENTIFICATION					FAN DATA		COIL DATA			EFFICIENCY		ELECTRICAL				FILTER	UNIT DIMENSIONS							
MARK	NUMBER	TYPE	BUILDING	AREA SERVED	FAN DRIVE TYPE	DESIGN AIRFLOW (CFM)	AMBIENT DRY BULB (F)	REFRIGERANT	TOTAL COOLING CAPACITY (MBH)	EER	SEER	V / PH	SYSTEM POWER (kW)	MCA	MOP	FILTER RATING	OPERATING WEIGHT (LBS)	HEIGHT (IN)	WIDTH (IN)	LENGTH (IN)	CURB ADAPTER MODEL	MANUFACTURER	MODEL	NOTES
AC	4-1	PACKAGED COOLING UNIT	OPERATIONS	COMPUTER ROOM	4-SPEED DIRECT	785	95	R-410A	23,200	11	13.4	208 / 1	3.4	16.7	25	MERV 13	358	36	49	42	CA-TRN-1213-TRN-590-9	TRANE	4TCC4042E1000A	ALL
AC	4-2	PACKAGED COOLING UNIT	OPERATIONS	TELECOM ROOM	4-SPEED DIRECT	785	95	R-410A	23,200	11	13.4	208 / 1	3.4	16.7	25	MERV 13	358	36	49	42	-	TRANE	4TCC4042E1000A	ALL
AC	5-1	PACKAGED COOLING UNIT	MAINTENANCE	COMM ROOM	4-SPEED DIRECT	785	95	R-410A	23,200	11	13.4	208 / 1	3.4	16.7	25	MERV 13	358	36	49	42	-	TRANE	4TCC4042E1000A	ALL
AC	5-2	PACKAGED COOLING UNIT	MAINTENANCE	LAN ROOM	4-SPEED DIRECT	785	95	R-410A	23,200	11	13.4	208 / 1	3.4	16.7	25	MERV 13	358	36	49	42	-	TRANE	4TCC4042E1000A	ALL
AC	6-1	PACKAGED COOLING UNIT	FUEL/BRAKE	COMM	4-SPEED DIRECT	785	95	R-410A	23,200	11	13.4	208 / 1	3.4	16.7	25	MERV 13	358	36	49	42	CA-TRN-1213-TRN-590-9	TRANE	4TCC4042E1000A	ALL

NOTES:
1. CONTRACTOR TO VERIFY EXISTING ROOF CURB SIZE AND PROVIDE CURB ADAPTER AS NECESSARY FOR NEW EQUIPMENT.
2. PROVIDE WITH INTERMITTENT IGNITION DEVICE (IID)
3. FILTERS ARE TO BE PROVIDED WITH PRE-FILTER. MAXIMUM PRESSURE DROP SHALL BE BASED ON TOTAL PRESSURE DROP ACROSS THE FILTER BANK WITH DIRTY FILTERS.
4. PROVIDE WITH 100% MODULATING DRY-BULB TYPE AIR ECONOMIZER.
5. DISCONNECT PROVIDED BY DICISION 26 CONTRACTOR.
6. PROVIDE SCCR RATINGS GREATER THAN FAULT AMPS SHOWN ON ELECTRICAL DRAWINGS.
7. PROVIDE SUPPLY AND POWERED EXHAUST FANS WITH VFD- BY RTU MANUFACTURER.
8. UNIT SHALL COMPLY WITH ECONOMIZER FAULT DETECTION AND DIAGNOSTICS (FDD) REQUIREMENTS PER CALIFORNIA TITLE 24, PART 6.
9. PROVIDE WITH DUCT SMOKE DETECTOR FOR AUTOMATIC UNIT SHUT OFF. FURNISHED AND WIRED BY DIV 26 CONTRACTOR. ISNTALLED BY DIV 23 CONTRACTOR.
10. LISTED UNIT OPERATING WEIGHT EXCLUDES CURB.
11. UNIT TO BE BACNET COMPATIBLE AND SHALL BE TIED TO THE EXISTING ENERGY MANAGEMENT CONTROL SYSTEM (EMCS).
12. PROVIDE VIBRATION ISOLATION AND SEISMIC RESTRAINT.
13. PROVIDE INVERTER-READY NEMA PREMIUM EFFICIENCY MOTOR WITH SHAFT GROUNDING SYSTEM.
14. PROVIDE A PROGRAMMABLE THERMOSTAT WITH TEMPERATURE SETPOINTS FOR AT LEAST FOUR SCHEDULING PERIODS WITHIN 24 HOURS.
15. PROVIDE CONDENSER COIL GAURD.
16. PROVIDE WITH 115V FIELD POWERED SERVICE OUTLET.

LICENSED PROFESSIONAL ENGINEER
SEVAK GALSTIAN
M-39730
EXP. 12/31/25
MECHANICAL
STATE OF CALIFORNIA

IFB 4-2550 EXHIBIT B

Stantec
801 S. Figueroa Street, Suite 300
Los Angeles, CA 90017

Copyright Reserved
The Contractor shall verify and be responsible for all dimensions. DO NOT scale the drawing - use dimensions or omissions shall be reported to Stantec without delay.
This drawing is the property of Stantec and shall not be reused or reproduced in whole or in part. Reproduction or use for any purpose other than that authorized by Stantec is forbidden.

REVISION	DESCRIPTION	DATE
	100% RESUBMITTAL	5/13/2024
	100% CONSTRUCTION DRAWING SUBMITTAL	3/27/2024
	90% UPDATED CONSTRUCTION SUBMITTAL	2/13/2024

REPLACEMENT OF MECHANICAL UNITS AT SANTA ANA BUS BASE
4301 W. MAC ARTHUR BLVD., SANTA ANA, CA

HEATPUMP AND AIR CONDITIONER SCHEDULES

JOB #:
DESIGN BY: Designer
DRAWN BY: Author
CHECKED BY: Checker
DATE:
SCALE:
SHEET: M-005P

OCTA
ORANGE COUNTY TRANSPORTATION AUTHORITY
550 SOUTH MAIN STREET, ORANGE, CA

Autodesk Docs://2014233703_Santa_Ana_Bus/mech_SantaAnaBus_2014233703.rvt
5/8/2024 11:15:03 AM

IFB 4-2550 EXHIBIT B

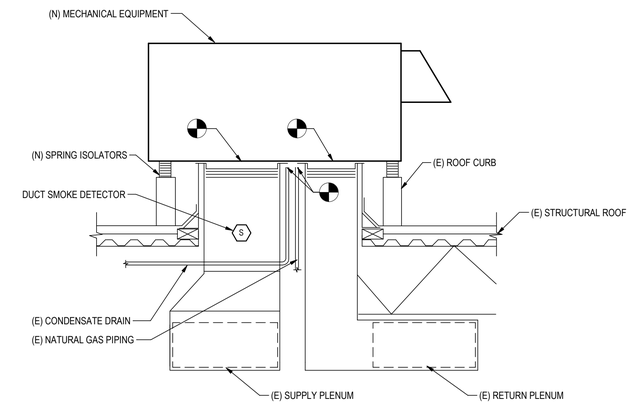

NOTES:

1. CONTRACTOR SHALL PERFORM WORK IN A MANNER SO THAT NO WARRANTIES ARE VOIDED.
2. REFER TO THE CONTRACT DOCUMENTS FOR DUCT MATERIAL AND INSULATION REQUIREMENTS.
3. THE CURB INSULATION SHALL BE EQUAL TO THE ROOF INSULATION RATING
4. COORDINATE THE LOCATION AND SIZE OF THE EQUIPMENT RAIL BASED ON THE EQUIPMENT.
5. CONTRACTOR TO REUSE EXISTING ROOF CURBS AND/OR PROVIDE NEW ROOF CURB ADAPTERS AS SPECIFIED ON THE SCHEDULES.
6. THE TOP OF THE CURB IS TO BE MOUNTED A MINIMUM OF 18 INCHES / 46 CM ABOVE THE TOP OF THE ROOF UNLESS NOTED OTHERWISE.
7. PROVIDE A HINGED FAN BASE FOR ACCESS TO THE MOTORIZED DAMPER
8. CONTRACTOR TO VERIFY EXISTING ROOF CURB IS ADEQUATE FOR NEW EQUIPMENT AND PROVIDE WITH CURB ADAPTER AS REQUIRED.

2 M-006 ROOFTOP EQUIPMENT RECONNECTION DETAIL

12" = 1'-0"

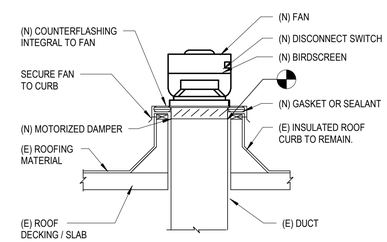

NOTES:

1. COORDINATE SCOPE OF WORK WITH ROOFING CONTRACTOR / OWNER TO NOT VOID ANY WARRANTIES.
2. CONTRACTOR IS TO REUSE EXISTING DUCT.
3. COORDINATE THE LOCATION AND SIZE OF THE EQUIPMENT RAIL BASED ON THE EQUIPMENT.
4. CONTRACTOR IS TO REUSE EXISTING INSULATED ROOF CURB AND/OR PROVIDE NEW ROOF CURB ADAPTERS AS SPECIFIED ON THE SCHEDULES.
5. THE TOP OF THE CURB IS TO BE MOUNTED A MINIMUM OF 18 INCHES / 46 CM ABOVE THE TOP OF THE ROOF UNLESS NOTED OTHERWISE.
6. PROVIDE A HINGED FAN BASE FOR ACCESS TO THE MOTORIZED DAMPER.
7. CONTRACTOR TO VERIFY EXISTING ROOF CURB IS ADEQUATE FOR NEW EQUIPMENT AND PROVIDE WITH CURB ADAPTER AS REQUIRED.

1 M-006 ROOF MOUNTED FAN RECONNECTION DETAIL

12" = 1'-0"

LICENSED PROFESSIONAL ENGINEER SEVAN GALSTYAN M-39730 EXP. 02/31/25 MECHANICAL STATE OF CALIFORNIA

Stantec

801 S. Figueroa Street, Suite 300
Los Angeles, CA 90017

Copyright Reserved
The Contractor shall verify and be responsible for all dimensions. DO NOT scale the drawing, any errors or omissions shall be reported to Stantec without delay.
This drawing is the property of Stantec and shall not be reproduced in whole or in part without written permission. Reproduction or use for any purpose other than that authorized by Stantec is forbidden.

REVISION	DESCRIPTION	DATE
	100% RESUBMITTAL	5/13/2024
	100% CONSTRUCTION DRAWING SUBMITTAL	3/27/2024
	90% UPDATED CONSTRUCTION SUBMITTAL	2/13/2024
	90% CONSTRUCTION DRAWING SUBMITTAL	12/07/2023

REPLACEMENT OF MECHANICAL UNITS AT SANTA ANA BUS BASE
4301 W. MAC ARTHUR BLVD., SANTA ANA, CA

MECHANICAL DETAILS

JOB #:	
DESIGN BY:	SG
DRAWN BY:	RW
CHECKED BY:	GY
DATE:	
SCALE:	12" = 1'-0"
SHEET:	M-006P

OCTA

ORANGE COUNTY TRANSPORTATION AUTHORITY
550 SOUTH MAIN STREET, ORANGE, CA

Autodesk Docs://2014233703_Santa_Ana_Bus/mech_SantaAnaBus_2014233703.rvt

5/8/2024 11:15:03 AM

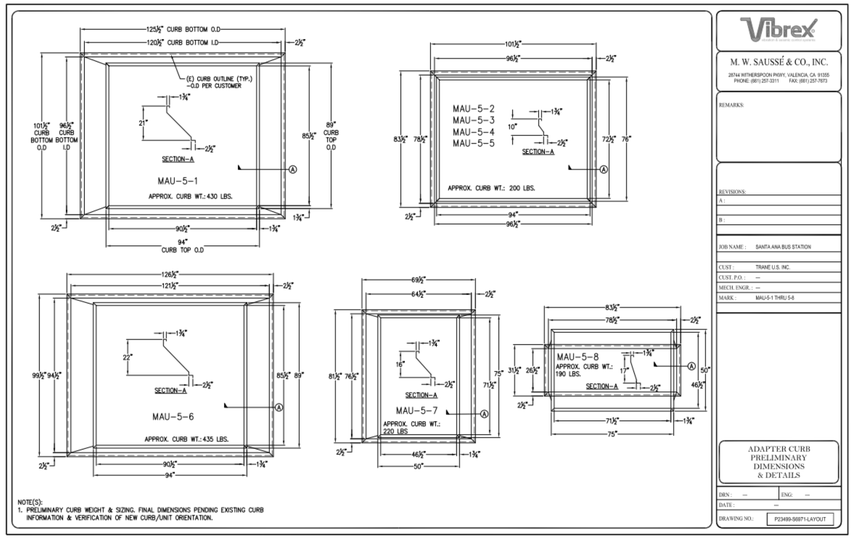

Vibrex

M. W. SAUSSÉ & CO., INC.
28744 witherspoon pkwy, valencia, ca 91355
PHONE: (661) 257-3311 FAX: (661) 257-7673

REMARKS:

REVISIONS:
A :
B :

JOB NAME : SANTA ANA BUS STATION
CUST : TRANE U.S. INC.
CUST. P.O. : —
MECH. ENGR. : —
MARK : MAU-5-1 THRU 5-8

ADAPTER CURB PRELIMINARY DIMENSIONS & DETAILS

DRN : — ENG : —
DATE : —
DRAWING NO. : P23499-S6871-LAYOUT

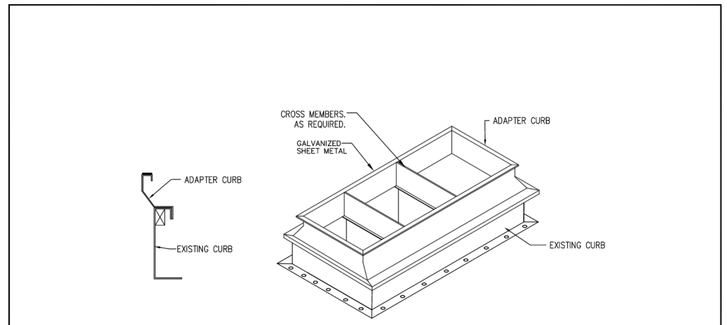

THIS IS A TYPICAL DRAWING SUBMITTED FOR APPROVAL OF TYPE ONLY. CERTIFIED DIMENSIONAL DRAWINGS ARE AVAILABLE WITH THE RECEIPT OF APPROVED EQUIPMENT SUBMITTALS.

Vibrex

TYPE : ADAPTER CURB

M. W. SAUSSÉ & CO., INC.
28744 WITHERSPOON PKWY, VALENCIA, CA 91355
PHONE: (661) 257-3311 FAX: (661) 257-7673

JOB NAME : SANTA ANA BUS STATION	REVISIONS :	DRN : KL	ENG : KL
CUST : LOS ANGELES TRANE	A :	DATE : 01/16/2024	
CUST. P.O. : —	B :	DRAWING NO. : PREL-011624-2	
MECH. ENGR. : —	C :		
MARK : OPTION 2: MAU-5-1, 6 (MODEL 125); MAU-5-2, 3, 4, 5 (MODEL 122); MAU-5-7 (MODEL 115); MAU-5-8 (MODEL 109) (QTY. 8)			

2 M-007 MAU ROOF CURB ADAPTER DETAIL

12" = 1'-0"

MicroMetl

DATE:	WEIGHT (LBS):	DESCRIPTION:	PART NUMBER:
02/2020	182	CURB ADAPTER	CA-TRN-593-TRN-592-11

SUBMITTED TO: COMPANY: JOB NAME: APPROVED BY: DATE:

EXISTING UNIT: NEW UNIT:

CURB ADAPTER INFORMATION:

1. BEFORE ORDERING CURB ADAPTER, CONTRACTOR MUST CONFIRM THE DIMENSIONS OF THE EXISTING CURB ON THIS DRAWING

2. BEFORE NEW HVAC UNIT IS SET IN PLACE, INSPECT STRUCTURAL STABILITY OF EXISTING CURB AND BUILDING'S ROOF LOAD CAPABILITY. REINFORCE IF REQUIRED.

3. ALL CURB ADAPTERS WILL INCREASE THE SYSTEM'S EXTERNAL STATIC PRESSURE AND MUST BE INCLUDED WHEN CALCULATING UNIT REQUIREMENTS

APPROXIMATE STATIC PRESSURE LOSS AT CFM RANGE				
CFM	5,000	6,700	8,400	10,000
STATIC LOSS	0.021	0.037	0.059	0.084
NOTE:	STATIC PRESSURE LOSS DATA IS BASED ON SIMULATED ANALYSIS WHICH INCLUDES BOTH SUPPLY AND RETURN			

FEATURES:
- FULLY WELDED HEAVY GAUGE CONSTRUCTION
- TRANSITIONS INCLUDED
- FULL INTERNAL INSULATION
- GASKET PACKAGE INCLUDED

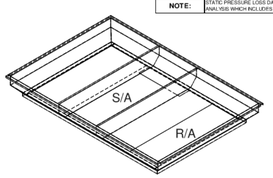

EXISTING CURB TOP VIEW

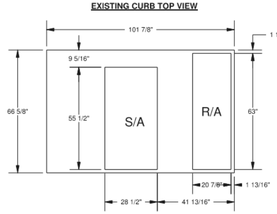

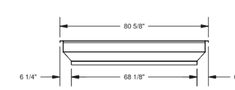

ADAPTER END VIEW

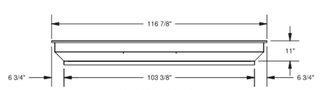

ADAPTER SIDE VIEW

NOTES:

THIS DOCUMENT IS THE PROPERTY OF MICROMETL CORPORATION AND IS DELIVERED UPON THE EXPRESS CONDITION THAT THE CONTENTS WILL NOT BE DISCLOSED OR USED WITHOUT MICROMETL'S WRITTEN CONSENT.
MANUFACTURER RESERVES THE RIGHT TO DISCONTINUE, OR CHANGE AT ANYTIME, SPECIFICATIONS & DESIGNS WITHOUT ANY NOTICE AND WITHOUT INCURRING OBLIGATIONS. COPYRIGHT MICROMETL CORPORATION 2017. ALL RIGHTS RESERVED

MICROMETL CORP * 3035 N. SHADELAND AVE., STE 300 * INDIANAPOLIS, IN 46226 * 1-800-662-4822 *** MICROMETL * 905 SOUTHERN WAY * SPARKS, NV * 1-800-884-4662 *** MICROMETL * 201 KODAK BLVD * LONGVIEW, TX 75602 * 1-903-248-4800

MicroMetl

DATE:	WEIGHT (LBS):	DESCRIPTION:	PART NUMBER:
02/2020	61	CURB ADAPTER	CA-TRN-I213-TRN-590-9

SUBMITTED TO: COMPANY: JOB NAME: APPROVED BY: DATE:

EXISTING UNIT: NEW UNIT:

CURB ADAPTER INFORMATION:

1. BEFORE ORDERING CURB ADAPTER, CONTRACTOR MUST CONFIRM THE DIMENSIONS OF THE EXISTING CURB ON THIS DRAWING

2. BEFORE NEW HVAC UNIT IS SET IN PLACE, INSPECT STRUCTURAL STABILITY OF EXISTING CURB AND BUILDING'S ROOF LOAD CAPABILITY. REINFORCE IF REQUIRED.

3. ALL CURB ADAPTERS WILL INCREASE THE SYSTEM'S EXTERNAL STATIC PRESSURE AND MUST BE INCLUDED WHEN CALCULATING UNIT REQUIREMENTS

APPROXIMATE STATIC PRESSURE LOSS AT CFM RANGE			
CFM	400	800	1,200
STATIC LOSS	0.006	0.031	0.073
NOTE:	STATIC PRESSURE LOSS DATA IS BASED ON SIMULATED ANALYSIS WHICH INCLUDES BOTH SUPPLY AND RETURN		

FEATURES:
- FULLY WELDED HEAVY GAUGE CONSTRUCTION
- TRANSITIONS INCLUDED
- FULL INTERNAL INSULATION
- GASKET PACKAGE INCLUDED

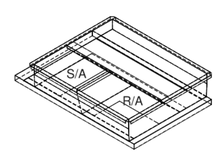

EXISTING CURB TOP VIEW

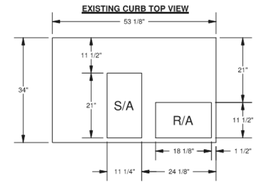

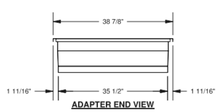

ADAPTER END VIEW

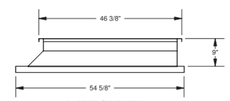

ADAPTER SIDE VIEW

NOTES:

THIS DOCUMENT IS THE PROPERTY OF MICROMETL CORPORATION AND IS DELIVERED UPON THE EXPRESS CONDITION THAT THE CONTENTS WILL NOT BE DISCLOSED OR USED WITHOUT MICROMETL'S WRITTEN CONSENT.
MANUFACTURER RESERVES THE RIGHT TO DISCONTINUE, OR CHANGE AT ANYTIME, SPECIFICATIONS & DESIGNS WITHOUT ANY NOTICE AND WITHOUT INCURRING OBLIGATIONS. COPYRIGHT MICROMETL CORPORATION 2017. ALL RIGHTS RESERVED

MICROMETL CORP * 3035 N. SHADELAND AVE., STE 300 * INDIANAPOLIS, IN 46226 * 1-800-662-4822 *** MICROMETL * 905 SOUTHERN WAY * SPARKS, NV * 1-800-884-4662 *** MICROMETL * 201 KODAK BLVD * LONGVIEW, TX 75602 * 1-903-248-4800

1 M-007 RTU ROOF CURB ADAPTER DETAIL

12" = 1'-0"

SUBMITTAL MicroMetl

WEIGHT:	DATE:	Part Number:
103 lbs	5/10	CA-TRN-I235-TRN-5750

SUBMITTED TO: JOB NAME:
COMPANY: EQUIPMENT:
DRAWN BY: NOTES:

NEW TRANE UNITS (TRN-I235)

2WCC,WCX,YCX,4TCC,TCX 3042A-3060A; 2/4YCC 3042-3060A; 4DCY,TCY 4048A-4060A; 4DCZ 6048A-6060A; 4WCZ,YCZ 6048A-6060A; 4WCC,WCX,WCY,YCX 3048A-3060A; 4YCY 4042A-4060A

EXISTING UNIT (TRN-5750)

TRANE: DCY 048F,060F; TCC 048F/F-H/G,60F/G; TCP,YCP 048G,060G; TCX,TCY,WCC,WCP,WCX,WCY 048F/G,060F/G; WCZ 060F; YCC 048F-H,060F; YCX,YCY 048F-H/G,060F-M/G; YCZ 050F,060F

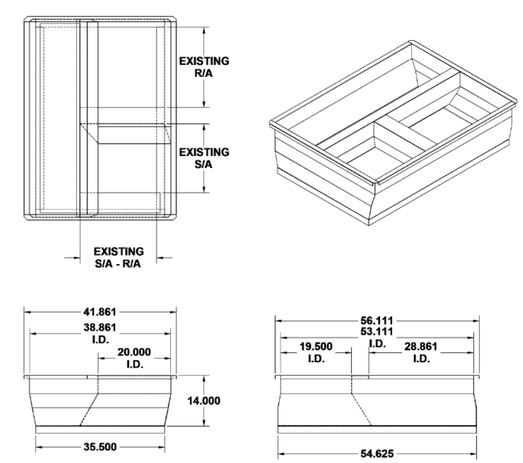

Features:
- Fully assembled curb adaptor.
- Includes internal duct transitions.
- Internally insulated with 1" - 1.5" lb insulation. Gasketing package provided.
- Adaptor pans and supports provided / field installed

Curb Adaptor Information
- To verify that the curb adaptor shown on this page is the correct adaptor for you job be sure the existing curb is the same size as the dimensions provided. (The bottom dimensions of curb adaptor are larger than existing curb outside dimension.)
- Before new HVAC unit is set in place, inspect structural stability of existing curb and building's roof load capability. Reinforce if required.
- All curb adaptors will increase the systems external static pressure and must be included when calculating unit requirements.
- Curb adaptors are designed to attach to an existing curb with side x side duct connections. The curb adaptor is not designed for use with concentric duct configuration.
- No calculations are available for this product. For a calculated product, please contact factory for part number, pricing, and lead time.
- Please contact factory for more detailed dimensional information if required. Designs are based on standard factory dimensions, and may differ in the field.

THIS DOCUMENT IS THE PROPERTY OF MICROMETL CORPORATION AND IS DELIVERED UPON THE EXPRESS CONDITION THAT THE CONTENTS WILL NOT BE DISCLOSED OR USED WITHOUT MICROMETL'S WRITTEN CONSENT. FORM NO. 6997-1P

MICROMETL CORP. - 3035 NORTH SHADELAND AVENUE, SUITE 300 - INDIANAPOLIS, IN 46226 - 1-800-662-4822 — MICROMETL SPARKS - 905 SOUTHERN WAY - SPARKS, N

LICENSED PROFESSIONAL ENGINEER SEVAK GALSTYAN M-39730 EXP. 12/31/25 MECHANICAL STATE OF CALIFORNIA

Stantec
801 S. Figueroa Street, Suite 300
Los Angeles, CA 90017

Copyright Reserved
The Contractor shall verify and be responsible for all dimensions. DO NOT scale the drawing - use dimensions or details as indicated. Report errors to Stantec without delay.
This drawing is the property of Stantec and shall not be reproduced in whole or in part without permission. Reproduction or use for any purpose other than that authorized by Stantec is forbidden.

REVISION	DESCRIPTION	DATE
	100% RESUBMITTAL	5/13/2024
	100% CONSTRUCTION DRAWING SUBMITTAL	3/27/2024
	90% UPDATED CONSTRUCTION SUBMITTAL	2/13/2024

REPLACEMENT OF MECHANICAL UNITS AT SANTA ANA BUS BASE
4301 W. MAC ARTHUR BLVD., SANTA ANA, CA

MECHANICAL DETAILS

JOB #:
DESIGN BY: SG
DRAWN BY: RW
CHECKED BY: GY
DATE:
SCALE: 12" = 1'-0"
SHEET: M-007P

OCTA
ORANGE COUNTY TRANSPORTATION AUTHORITY
550 SOUTH MAIN STREET, ORANGE, CA

Autodesk Docs://2014233703_Santa_Ana_Bus/mech_SantaAnaBus_2014233703.rvt

Stantec

801 S. Figueroa Street, Suite 300
Los Angeles, CA 90017

Copyright Reserved
The Contractor shall verify and be responsible for all dimensions. DO NOT scale the drawing - use dimensions or contact the architect/engineer for clarification. Drawings not to be used for construction purposes until signed and sealed by the Architect/Engineer. Reproduction or use for any purpose other than that authorized by Stantec is forbidden.

REVISION	DESCRIPTION	DATE
	100% RESUBMITTAL	5/13/2024
	100% CONSTRUCTION DRAWING SUBMITTAL	3/27/2024
	90% UPDATED CONSTRUCTION SUBMITTAL	2/13/2024
	90% CONSTRUCTION DRAWING SUBMITTAL	12/07/2023

REPLACEMENT OF MECHANICAL UNITS AT SANTA ANA BUS BASE

4301 W. MAC ARTHUR BLVD., SANTA ANA, CA

MECHANICAL CONTROLS

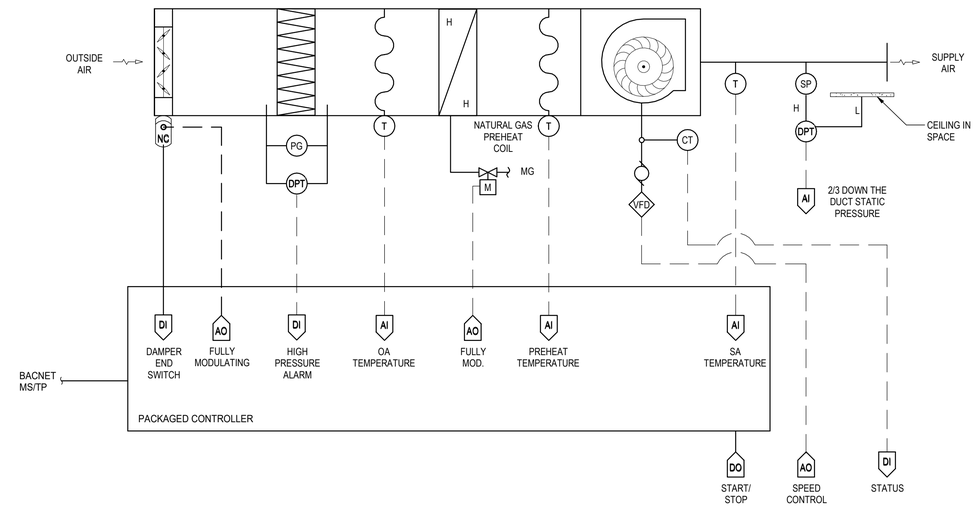

TYPICAL MAKEUP AIR UNIT

MAKEUP AIR HANDLER SEQUENCE OF OPERATION

GENERAL
1. ALL HAND-OFF-AUTO (HOA) SWITCHES NORMALLY REMAIN IN THE AUTO POSITION AND THE HAND AND OFF POSITIONS ARE USED FOR MAINTENANCE SITUATIONS. ALL SETPOINTS, DEADBANDS, AND TIME DELAY INTERVALS DESCRIBED IN SEQUENCE SHALL BE ADJUSTABLE BY SYSTEM OPERATORS. APPROPRIATE DEADBANDS AND TIME DELAYS SHALL BE USED TO PREVENT SHORT CYCLING SITUATIONS.
2. PROVIDE AND INSTALL ALL NECESSARY COMPONENTS AND ACCESSORIES FOR A COMPLETE AND OPERATIONAL SYSTEM INCLUDING, BUT NOT LIMITED TO SENSORS, RELAYS, COMMUNICATION WIRING AND CONDUIT, AND ALL NECESSARY ELECTRICAL DEVICES, WIRING, AND CONDUIT.
3. ALL MAKEUP AIR UNITS (MAU) SHALL INTERLOCK WITH EXHAUST FANS. REFER TO FLOOR PLANS FOR FURTHER DETAILS.

SCHEDULING
THE MAU SHALL HAVE SCHEDULING FUNCTIONALITY THROUGH THE DDC SYSTEM.

START UP MODE
1. UPON STARTUP OF EXHAUST FANS, DDC SHALL ISSUE COMMAND TO MAH FOR STARTUP.
2. THE OUTSIDE AIR DAMPER SHALL OPEN TO MINIMUM POSITION. THE DAMPER END-SWITCH SHALL VERIFY THAT THE DAMPER IS NOT CLOSED PRIOR TO ENERGIZING THE SUPPLY FAN.
3. THE SUPPLY FAN SHALL BE ENERGIZED.

SUPPLY FAN CONTROL
1. THE SUPPLY FAN IS ENERGIZED AND RUNS CONTINUOUSLY.
2. DDC MONITORS THE SUPPLY FAN THROUGH ITS CURRENT SENSOR. UPON A FAILURE, AN ALARM IS ISSUED.

SAFETY CONTROL
1. IF SMOKE IS DETECTED IN THE AIRSTREAM BY A DUCT SMOKE DETECTOR OR THE FIRE ALARM ZONE MODULE INDICATES A ZONE ALARM, THE SYSTEM SHALL BE DEACTIVATED

FILTER MONITORING
1. DDC SHALL MONITOR THE AIR FILTER PRESSURE DROP AND ISSUE A DIRTY FILTER ALARM UPON HIGH DIFFERENTIAL PRESSURE.

VENTILATION
1. DDC SHALL MODULATE SUPPLY FAN TO MAINTAIN A SPACE PRESSURE SET POINT.

GENERAL EXHAUST EMCS POINTS LIST

TAG	NAME/FUNCTION	AI	AO	DI	DO	REMARKS
1	EXHAUST FAN ENABLE/DISABLE				√	
2	EXHAUST FAN ALARM			√		

GENERAL EXHAUST ALARMS

DESIGNATION	POINT	PROTOCOL
EXHAUST FAN FAILURE	2	ALARM AT OPERATOR'S SYSTEM TERMINAL.

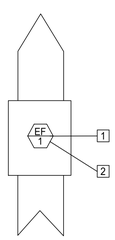

SEQUENCE OF OPERATION
APPLIES TO ALL EXHAUST FANS

OCCUPIED MODE:
EQUIPMENT SHALL OPERATE CONTINUOUSLY IN OCCUPIED (ENABLED) MODE. EF-X SHALL BE NORMALLY OFF.

1 M-008 **EXHAUST CONTROL DIAGRAM**
NOT TO SCALE

2 M-008 **CONTROL DIAGRAM - MAKEUP AIR UNIT**
NOT TO SCALE

LICENSED PROFESSIONAL ENGINEER
SELVAK GALSTIAN
M-39730
EXP. 12/31/25
MECHANICAL
STATE OF CALIFORNIA

JOB #:	
DESIGN BY:	SG
DRAWN BY:	RW
CHECKED BY:	GY
DATE:	
SCALE:	NOT TO SCALE
SHEET:	M-008P

OCTA

ORANGE COUNTY
TRANSPORTATION AUTHORITY
550 SOUTH MAIN STREET, ORANGE, CA

Autodesk Docs://2014233703_Santa_Ana_Bus/mech_SantaAnaBus_2014233703.rvt

Stantec
801 S. Figueroa Street, Suite 300
Los Angeles, CA 90017

Copyright Reserved
The Contractor shall verify and be responsible for all dimensions. DO NOT scale the drawing - any errors or omissions shall be reported to Stantec without delay.
This drawing is the property of Stantec and shall not be reproduced in whole or in part without permission. Reproduction or use for any purpose other than that authorized by Stantec is forbidden.

REVISION	DESCRIPTION	DATE
	100% RESUBMITTAL	5/13/2024
	100% CONSTRUCTION DRAWING SUBMITTAL	3/27/2024
	90% UPDATED CONSTRUCTION SUBMITTAL	2/13/2024
	90% CONSTRUCTION DRAWING SUBMITTAL	12/07/2023

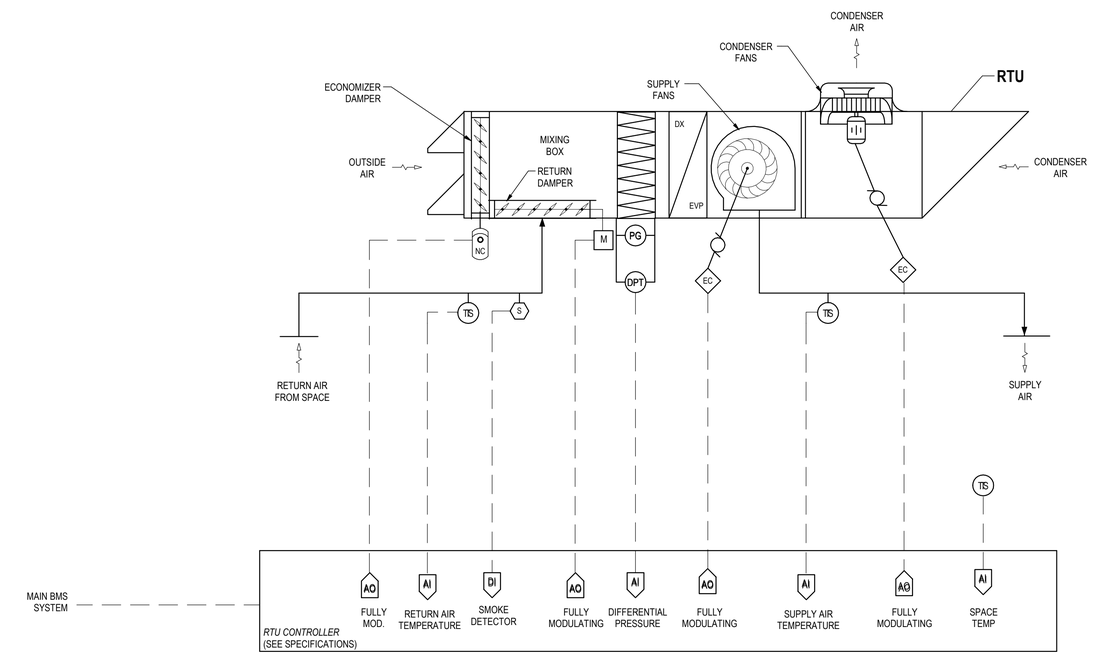

TYPICAL ROOFTOP UNIT

SEQUENCE OF OPERATION

GENERAL

1. ALL HAND-OFF-AUTO (HOA) SWITCHES NORMALLY REMAIN IN THE AUTO POSITION AND THE HAND AND OFF POSITIONS ARE USED FOR MAINTENANCE SITUATIONS. ALL SETPOINTS, DEADBANDS, AND TIME DELAY INTERVALS DESCRIBED IN SEQUENCE SHALL BE ADJUSTABLE BY SYSTEM OPERATORS. APPROPRIATE DEADBANDS AND TIME DELAYS SHALL BE USED TO PREVENT SHORT CYCLING SITUATIONS.
2. PROVIDE AND INSTALL ALL NECESSARY COMPONENTS AND ACCESSORIES FOR A COMPLETE AND OPERATIONAL SYSTEM INCLUDING, BUT NOT LIMITED TO SENSORS, RELAYS, COMMUNICATION WIRING AND CONDUIT, AND ALL NECESSARY ELECTRICAL DEVICES, WIRING, AND CONDUIT.

START-UP

1. THE ROOFTOP UNIT SHALL BE ACTIVATED BY THE MECHANICAL CONTROLLER AND SHALL RUN CONTINUOUSLY.
2. THE UNIT SHALL MONITOR AND LOG ALL SENSOR INPUTS.

SUPPLY FAN CONTROL

1. THE SUPPLY FAN IS ENERGIZED AND RUNS CONTINUOUSLY.
2. CONTROLLER SHALL MODULATE THE SUPPLY FAN SPEED BETWEEN MANUFACTURER'S ESTABLISHED RANGE TO MAINTAIN SPACE TEMPERATURE SETPOINT.
3. DDC MONITORS THE SUPPLY FAN THROUGH ITS CURRENT SENSOR. UPON A FAILURE, AN ALARM IS ISSUED.

ROOFTOP UNIT OPERATION

1. CONTROLLER SHALL PROVIDE ALL CONTROL OF SUPPLY FANS, CONDENSER FANS, MODULATING DAMPERS, COOLING COIL, REHEAT COIL, COMPRESSOR, AND ASSOCIATED COMPONENTS OF THE RTU UNIT.
2. ROOFTOP UNIT SHALL PROVIDE CONTINUOUS COOLING TO THE OFFICE SPACE BASED ON A 15-MIN AVERAGE RETURN AIR TEMPERATURE.
3. ROOFTOP UNIT SHALL PROVIDE ADJUSTABLE DISCHARGE AIR TEMPERATURE.

FILTER MONITORING

1. THE UNIT CONTROLLER SHALL MONITOR THE AIR FILTER DIFFERENTIAL PRESSURE DROP AND ISSUE A DIRTY FILTER ALARM UPON HIGH DIFFERENTIAL PRESSURE.

SAFETY CONTROL

1. IF SMOKE IS DETECTED IN THE AIRSTREAM BY A DUCT SMOKE DETECTOR OF THE FIRE ALARM ZONE MODULE INDICATES A ZONE ALARM, THE UNIT SHUTS DOWN. REFER TO SHUTDOWN MODE. IF A CONTROLLING SENSOR IS DETERMINED TO HAVE FAILED THAT WOULD DAMAGE THE EQUIPMENT OR CAUSE INAPPROPRIATE CONDITIONS IN THE SPACE, THE UNIT SHUTS DOWN. REFER TO SHUTDOWN MODE

SHUTDOWN MODE CONTROL

1. UPON A SHUTDOWN COMMAND FROM THE UNIT CONTROLLER OR A SAFETY CONTROL DEVICE COMMAND, THE UNIT COMMENCES SHUTDOWN.
2. THE SUPPLY FAN AND CONDENSER FAN ARE COMMANDED OFF.
3. THE RETURN AIR DAMPER IS MODULATES TO FULLY OPEN AND THE OUTSIDE AIR DAMPER MODULATES TO FULLY CLOSED.

SET POINTS

1. COOLING DISCHARGE AIR TEMPERATURE SETPOINT	55 F	(ADJ)
2. ROOM DIFFERENTIAL PRESSURE	+0.025 INWC	(ADJ)
3. ROOM DIFFERENTIAL PRESSURE TIME DELAY	1 MIN	(ADJ)

1 / M-009

CONTROL DIAGRAM - ROOF-MOUNTED PACKAGE UNIT WITH EXTERNAL POWERED ECONOMIZER

NOT TO SCALE

LICENSED PROFESSIONAL ENGINEER
SEVAK GALSTYAN
M-39730
EXP. 12/31/25
MECHANICAL
STATE OF CALIFORNIA

REPLACEMENT OF MECHANICAL UNITS AT SANTA ANA BUS BASE

4301 W. MAC ARTHUR BLVD., SANTA ANA, CA

MECHANICAL CONTROLS

JOB #:	
DESIGN BY:	SG
DRAWN BY:	RW
CHECKED BY:	GY
DATE:	
SCALE:	NOT TO SCALE
SHEET:	M-009P

OCTA

ORANGE COUNTY TRANSPORTATION AUTHORITY
550 SOUTH MAIN STREET, ORANGE, CA

Autodesk Docs://2014233703_Santa_Ana_Bus/mech_SantaAnaBus_2014233703.rvt
5/8/2024 11:15:04 AM

IFB 4-2550 EXHIBIT B

1 M-200 **OPERATIONS BUILDING MECHANICAL ROOF PLAN**

3/32" = 1'-0"

GENERAL NOTES

1. COORDINATE LOCATIONS OF ALL EQUIPMENT AND ROUTING OF ALL DUCTWORK AND PIPING WITH OTHER TRADES PRIOR TO ANY ROUGH-IN. PROVIDE OFFSETS AND TRANSITIONS WHERE REQUIRED TO ACCOMODATE BUILDING CONDITIONS AND PRESERVE HEADROOM.
2. INSTALL AND ROUTE CONDENSATE PIPING FOR ROOFTOP HVAC EQUIPMENT AND ROUTE AT LEAST 12 FEET AWAY FROM UNIT IN DIRECTION OF ROOF SLOPE AND ROOF DRAINS, MIN 1% PIPE SLOPE.
3. INSTALL EQUIPMENT LEVEL ON ROOF.
4. MAINTAIN MINIMUM OF 10'-0" OF HORIZONTAL DISTANCE BETWEEN BUILDING OUTDOOR AIR INTAKE AND BUILDING EXHAUST AIR AND PLUMBING VENTS.
5. EXISTING ROOF CURB AND DUCT TO BE REUSED. CONTRACTOR TO PROVIDE CURB ADAPTER FOR NEW EQUIPMENT PER SCHEDULE.

Keynote Legend

Key Value	Keynote Text
M:02	INSTALL NEW SUPPLY FAN AND RECONNECT TO EXISTING DUCTWORK BELOW
M:03	INSTALL NEW EXHAUST FAN AND RECONNECT TO EXISTING DUCTWORK BELOW
M:05	INSTALL NEW ROOFTOP UNIT AND RECONNECT TO EXISTING DUCTWORK BELOW
M:06	INSTALL NEW AIR CONDITIONING UNT AND RECONNECT TO EXISTING DUCTWORK BELOW

Stantec

801 S. Figueroa Street, Suite 300
Los Angeles, CA 90017

Copyright Reserved
The Contractor shall verify and be responsible for all dimensions. DO NOT scale the drawing - any errors or omissions shall be reported to Stantec without delay.
This drawing is the property of Stantec and shall not be reproduced in whole or in part without written permission. Reproduction or use for any purpose other than that authorized by Stantec is forbidden.

REVISION	DESCRIPTION	DATE
	100% RESUBMITTAL	5/13/2024
	100% CONSTRUCTION DRAWING SUBMITTAL	3/27/2024
	90% UPDATED CONSTRUCTION SUBMITTAL	2/13/2024
	90% CONSTRUCTION DRAWING SUBMITTAL	12/07/2023

REPLACEMENT OF MECHANICAL UNITS AT SANTA ANA BUS BASE

4301 W. MAC ARTHUR BLVD., SANTA ANA, CA

OPERATIONS BUILDING MECHANICAL ROOF PLAN

JOB #:	
DESIGN BY:	SG
DRAWN BY:	RW
CHECKED BY:	GY
DATE:	
SCALE:	As indicated
SHEET:	M-200P

LICENSED PROFESSIONAL ENGINEER
SEVAK GALSTYAN
M-39730
EXP. 12/31/25
MECHANICAL
STATE OF CALIFORNIA

OCTA

ORANGE COUNTY
TRANSPORTATION AUTHORITY
550 SOUTH MAIN STREET, ORANGE, CA

Autodesk Docs://2014233703_Santa_Ana_Bus/mech_SantaAnaBus_2014233703.rvt

5/8/2024 11:15:04 AM

STATE OF CALIFORNIA

Mechanical Systems

CALIFORNIA ENERGY COMMISSION

CERTIFICATE OF COMPLIANCE			NRCC-MCH-E
This document is used to demonstrate compliance for mechanical systems that are within the scope of the permit application and are demonstrating compliance using the prescriptive path outlined in 140.4, or 141.0(b)2 for alterations.			
Project Name:	Santa Ana Bus Station	**Report Page:**	**(Page 1 of 9)**
Project Address:	4301 W. MacArthur Blvd, Santa Ana, CA, 92704	**Date Prepared:**	2023-12-05T15:51:16-05:00

A. GENERAL INFORMATION

01	Project Location (city)	Santa Ana, CA	04	Total Conditioned Floor Area	265000
02	Climate Zone	8	05	Total Unconditioned Floor Area	0
03	Occupancy Types Within Project:		06	# of Stories (Habitable Above Grade)	1

• All Other Occupancies

B. PROJECT SCOPE

This table Includes mechanical systems or components that are within the scope of the permit application and are demonstrating compliance using the prescriptive path outlined in 140.4, 170.2(b) or 141.0(b)2 and 180.2(b)2 for alterations.

01		02		03	
Air System(s)		Wet System Components		Dry System Components	
☒	Heating Air System	☐	Water Economizer	☐	Air Economizer
☒	Cooling Air System	☐	Pumps	☐	Electric Resistance Heat
Mechanical Controls		☐	System Piping	☐	Fan Systems
☒	Mechanical Controls (existing to remain, altered or new)	☐	Cooling Towers	☐	Ductwork (existing to remain, altered or new)
		☐	Chillers	☐	Ventilation
		☐	Boilers	☐	Zonal Systems/ Terminal Boxes

STATE OF CALIFORNIA

Mechanical Systems

CALIFORNIA ENERGY COMMISSION

CERTIFICATE OF COMPLIANCE			NRCC-MCH-E
Project Name:	Santa Ana Bus Station	**Report Page:**	**(Page 2 of 9)**
		Date Prepared:	2023-12-05T15:51:16-05:00

C. COMPLIANCE RESULTS

Table C will indicate if the project data input into the compliance document is compliant with mechanical requirements. This table is not editable by the user. If this table says "DOES NOT COMPLY" or "COMPLIES with Exceptional Conditions" refer to Table D., or the table indicated as not compliant for guidance.

01		02		03		04		05		06		07		08	09
System Summary 110.1, 110.2, 140.4, 170.2(c)	AND	Pumps 140.4(k), 170.2(c)4I	AND	Fans/ Economizers 140.4(c), 140.4(e), 170.2(c)	AND	System Controls 110.2, 120.2, 140.4(f), 170.2(c)	AND	Ventilation 120.1, 160.2	AND	Terminal Box Controls 140.4(d), 170.2(c)4B	AND	Distribution 120.3, 140.4(l), 160.2, 160.3	AND	Cooling Towers 110.2(e)2	Compliance Results
(See Table F)		(See Table G)		(See Table H)		(See Table I)		(See Table J)		(See Table K)		(See Table L)		(See Table M)	
Yes	AND		AND		AND	Yes	AND		AND		AND		AND		COMPLIES
Mandatory Measures Compliance (See Table Q for Details)										COMPLIES					

D. EXCEPTIONAL CONDITIONS

This table is auto-filled with uneditable comments because of selections made or data entered in tables throughout the form.

E. ADDITIONAL REMARKS

This table includes remarks made by the permit applicant to the Authority Having Jurisdiction.

F. HVAC SYSTEM SUMMARY (DRY & WET SYSTEMS)

Space Conditioning System Information

01	02	03	04	05	06
System Name	Quantity	System Serving	System Status	Space Type	Utilizing Recovered Heat
RTU 4-1	1	Multi-zone			☐
RTU 4-2	1	Single zone	Alteration		☐
RTU 4-3	1	Single zone	Alteration		☐
RTU 4-4	1	Single zone	Alteration		☐

STATE OF CALIFORNIA

Mechanical Systems

CALIFORNIA ENERGY COMMISSION

CERTIFICATE OF COMPLIANCE			NRCC-MCH-E
Project Name:	Santa Ana Bus Station	**Report Page:**	**(Page 3 of 9)**
		Date Prepared:	2023-12-05T15:51:16-05:00

F. HVAC SYSTEM SUMMARY (DRY & WET SYSTEMS)

Space Conditioning System Information

01	02	03	04	05	06
System Name	Quantity	System Serving	System Status	Space Type	Utilizing Recovered Heat
RTU 5-1	1	Multi-zone			☐
RTU 5-2	1	Multi-zone			☐
RTU 6-1	1	Single zone	Alteration		☐
RTU 5-3	1	Multi-zone			☐

Dry System Equipment Sizing (includes air conditioners, condensers, heat pumps, VRF, furnaces and unit heaters and DOAS systems)

01	02	03	04	05	06	07	08	09	10	11
				Equipment Sizing per Mechanical Schedule (kBtu/h) 140.4(a&b), 170.2(c)1 & 170.2(c)2						
				Heating Output[2,3]			Cooling Output[2,3]		Load Calculations[3,4]	
Name or Item Tag	Equipment Category per Tables 110.2, 140.4(a)2 and 170.2(c)3aii	Equipment Type per Tables 110.2 and Title 20	Smallest Size Available[1] 140.4(a) and 170.2(c)1	Per Design (kBtu/h)	Rated (kBtu/h)	Supp. Heating Output (kBtu/h)	Sensible Per Design (kBtu/h)	Rated (kBtu/h)	Total Heating Load (kBtu/h)	Total Sensible Cooling Load (kBtu/h)
RTU 4-1	Furnace + AC	AC, air cooled, single pkg + warm-air central furnace, gas-fired	Yes	202	202	0	125.5	178	202	180
RTU 4-2	Furnace + AC	AC, air cooled, single pkg + warm-air central furnace, gas-fired	Yes	65	65	0	74	74	65	74
RTU 4-3	Furnace + AC	AC, air cooled, single pkg + warm-air central furnace, gas-fired	Yes	121	121	0	91	118	121	118
RTU 4-4	Furnace + AC	AC, air cooled, single pkg + warm-air central furnace, gas-fired	Yes	121	121	0	119	119	121	119
RTU 5-1	Furnace + AC	AC, air cooled, split + warm-air central furnace, gas-fired	Yes	202	202	0	149	182	202	182
RTU 5-2	Furnace + AC	AC, air cooled, single pkg + warm-air central furnace, gas-fired	Yes	202	202	0	128	179	202	179

STATE OF CALIFORNIA

Mechanical Systems

CALIFORNIA ENERGY COMMISSION

CERTIFICATE OF COMPLIANCE			NRCC-MCH-E
Project Name:	Santa Ana Bus Station	**Report Page:**	**(Page 4 of 9)**
		Date Prepared:	2023-12-05T15:51:16-05:00

F. HVAC SYSTEM SUMMARY (DRY & WET SYSTEMS)

Dry System Equipment Sizing (includes air conditioners, condensers, heat pumps, VRF, furnaces and unit heaters and DOAS systems)

01	02	03	04	05	06	07	08	09	10	11
RTU 6-1	Unitary Heat Pumps (no elec. resistance)	Air-cooled, pkg (1phase)	Yes	45	45	0	47	47	47	47
RTU 5-3	Furnace + AC	AC, air cooled, single pkg + warm-air central furnace, gas-fired	Yes	202	202	0	132	180	202	180

[1]FOOTNOTES: Equipment shall be the smallest size, within the available options of the desired equipment line, necessary to meet the design heating and cooling loads of the building per 140.4(a) and 170.2(c)1. Healthcare facilities are excepted.

[2]It is common practice to show rated output capacity on the equipment schedule. Sensible cooling output comes from specification sheet tables.

[3] If equipment is heating only, leave cooling output and load blank. If equipment is cooling only, leave heating output and load blank.

[4] Authority Having Jurisdiction may ask for load calculations used for compliance per 140.4(b) and 170.2(c).

Dry System Equipment Efficiency (other than Package Terminal Air Conditioners (PTAC) and Package Terminal Heat Pumps (PTHP), DX-DOAS and Dual Fuel Heat Pumps)

01	02	03	04	05	06	07	08	09
		Heating Mode				Cooling Mode		
Name or Item Tag	Size Category (Btu/h)	Rating Condition (°F)	Efficiency Unit	Minimum Efficiency Required per Tables 110.2 / Title 20	Design Efficiency	Efficiency Unit	Minimum Efficiency Required per Tables 110.2 / Title 20	Design Efficiency
RTU 4-1	>=135kBtuh cooling/ <225kBtuh heating		AFUE	0.8	0.81	EER IEER	10.8 14	10.8 14
RTU 4-2	>=65kBtuh cooling/ <225kBtuh heating		AFUE	0.8	0.81	EER IEER	11 14.6	11 14.6
RTU 4-3	>=65kBtuh cooling/ <225kBtuh heating		AFUE	0.8	0.81	EER IEER	11 14.6	11 14.6
RTU 4-4	>=65kBtuh cooling/ <225kBtuh heating		AFUE	0.8	0.81	EER IEER	11 14.6	11 14.6
RTU 5-1	>=135kBtuh cooling/ <225kBtuh heating		AFUE	0.8	0.81	EER IEER	10.8 14	11 14

STATE OF CALIFORNIA

Mechanical Systems

CALIFORNIA ENERGY COMMISSION

CERTIFICATE OF COMPLIANCE			NRCC-MCH-E
Project Name:	Santa Ana Bus Station	**Report Page:**	**(Page 5 of 9)**
		Date Prepared:	2023-12-05T15:51:16-05:00

F. HVAC SYSTEM SUMMARY (DRY & WET SYSTEMS)

Dry System Equipment Efficiency (other than Package Terminal Air Conditioners (PTAC) and Package Terminal Heat Pumps (PTHP), DX-DOAS and Dual Fuel Heat Pumps)

01	02	03	04	05	06	07	08	09
		Heating Mode				Cooling Mode		
Name or Item Tag	Size Category (Btu/h)	Rating Condition (°F)	Efficiency Unit	Minimum Efficiency Required per Tables 110.2 / Title 20	Design Efficiency	Efficiency Unit	Minimum Efficiency Required per Tables 110.2 / Title 20	Design Efficiency
RTU 5-2	>=135kBtuh cooling/ <225kBtuh heating		AFUE	0.8	0.81	EER IEER	10.8 14	10.8 14
RTU 6-1	<65,000		HSPF2	6.7	7	SEER2	13.4	13.4
RTU 5-3	>=135kBtuh cooling/ <225kBtuh heating		AFUE	0.8	0.81	EER IEER	10.8 14	10.8 14

G. PUMPS

This section does not apply to this project.

H. FAN SYSTEMS & AIR ECONOMIZERS

This section does not apply to this project.

STATE OF CALIFORNIA

Mechanical Systems

CALIFORNIA ENERGY COMMISSION

CERTIFICATE OF COMPLIANCE			NRCC-MCH-E
Project Name:	Santa Ana Bus Station	**Report Page:**	**(Page 6 of 9)**
		Date Prepared:	2023-12-05T15:51:16-05:00

I. SYSTEM CONTROLS

This table is used to demonstrate compliance with mandatory controls in 110.2 and 120.2 and prescriptive controls in 140.4(f) and (n), 170.2(c)4D 170.2(c)4L or requirements in 141.0(b)2E 180.2(b)2 for altered space conditioning systems.

01	02	03	04	05	06	07	08	09
System Name	System Zoning	Conditioned Floor Area Being Served (ft²)	Thermostats 110.2(b) & (c)[1], 120.2(a) 160.3(a)2A or 141.0(b)2E & 180.2(b)2	Shut-Off Controls 120.2(e) & 160.3(a)2D	Isolation Zone Controls 120.2(g) & 160.3(a)2F	Demand Response 110.12 120.2(b) & 160.3(a)2B	Supply Air Temp. Reset 140.4(f) & 170.2(c)4D	Window Interlocks per 140.4(n) & 170.2(c)4D
BMS	Multi-zone	> 25,000 ft²	EMCS	EMCS	EMCS	EMCS	Included	NA: No operable windows

[1]FOOTNOTES: Gravity gas wall heaters, gravity floor heaters, gravity room heaters, non-central electric heaters, fireplaces or decorative gas appliances, wood stoves are not required to have setback thermostats.

J. VENTILATION AND INDOOR AIR QUALITY

This section does not apply to this project.

K. TERMINAL BOX CONTROLS

This section does not apply to this project.

L. DISTRIBUTION (DUCTWORK and PIPING)

This section does not apply to this project.

M. COOLING TOWERS

This section does not apply to this project.

Stantec
801 S. Figueroa Street, Suite 300
Los Angeles, CA 90017

Copyright Reserved
The Contractor shall verify and be responsible for all dimensions. DO NOT scale the drawing - any errors or omissions shall be reported to Stantec without delay.
The Copyrights to all designs and drawings are the property of Stantec. Reproduction or use for any purpose other than that authorized by Stantec is forbidden.

REVISION	DESCRIPTION	DATE
	100% RESUBMITTAL	5/13/2024
	100% CONSTRUCTION DRAWING SUBMITTAL	3/27/2024
	90% UPDATED CONSTRUCTION SUBMITTAL	2/13/2024
	90% CONSTRUCTION DRAWING SUBMITTAL	12/07/2023

REPLACEMENT OF MECHANICAL UNITS AT SANTA ANA BUS BASE

4301 W. MAC ARTHUR BLVD., SANTA ANA, CA

TITLE 24 CODE COMPLIANCE

JOB #:
DESIGN BY: SG
DRAWN BY: RW
CHECKED BY: GY
DATE:
SCALE:
SHEET: M-300P

LICENSED PROFESSIONAL ENGINEER
SEVAK GALSTYAN
M 39730
EXP. 12/31/25
MECHANICAL
STATE OF CALIFORNIA

OCTA
ORANGE COUNTY
TRANSPORTATION AUTHORITY
550 SOUTH MAIN STREET, ORANGE, CA

Autodesk Docs://2014233703_Santa_Ana_Bus/mech_SantaAnaBus_2014233703.rvt
5/8/2024 11:15:08 AM

STATE OF CALIFORNIA
Mechanical Systems
CALIFORNIA ENERGY COMMISSION

CERTIFICATE OF COMPLIANCE		NRCC-MCH-E
Project Name: Santa Ana Bus Station	Report Page:	(Page 7 of 9)
	Date Prepared:	2023-12-05T15:51:16-05:00

N. DECLARATION OF REQUIRED CERTIFICATES OF INSTALLATION

Selections have been made based on information provided in previous tables of this document. If any selection needs to be changed, please explain why in Table E Additional Remarks. These documents must be provided to the building inspector during construction and can be found online at https://www.energy.ca.gov/programs-and-topics/programs/building-energy-efficiency-standards/2022-building-energy-efficiency-4

Form/Title
NRCI-MCH-01-E - Must be submitted for all buildings

O. DECLARATION OF REQUIRED CERTIFICATES OF ACCEPTANCE

Selections have been made based on information provided in previous tables of this document. If any selection needs to be changed, please explain why in Table E Additional Remarks. These documents must be provided to the building inspector during construction and can be found online at https://www.energy.ca.gov/title24/2019standards/2019_compliance_documents/Nonresidential_Documents/NRCA/

Form/Title	Systems/Spaces To Be Field Verified
NRCA-MCH-16-A Supply Air Temperature Reset Controls	BMS
NRCA-MCH-18-A Energy Management Control Systems	BMS

P. DECLARATION OF REQUIRED CERTIFICATES OF VERIFICATION

There are no NRCV forms required for this project.

STATE OF CALIFORNIA
Mechanical Systems
CALIFORNIA ENERGY COMMISSION

CERTIFICATE OF COMPLIANCE		NRCC-MCH-E
Project Name: Santa Ana Bus Station	Report Page:	(Page 8 of 9)
	Date Prepared:	2023-12-05T15:51:16-05:00

Q. MANDATORY MEASURES DOCUMENTATION LOCATION

This table is used to indicate where mandatory measures are documented in the plan set or construction documentation.

01		02
Compliance with Mandatory Measures documented through MCH Mandatory Measures Note Block	No	Plan sheet or construction document location
03		04
Mandatory Measure		**Plan sheet or construction document location**
Heating Equipment Efficiency per 110.1		M-004 MECHANICAL SCHEDULES
Cooling Equipment Efficiency per 110.1		M-004 MECHANICAL SCHEDULES
Furnace Standby Loss Control per 110.2(d)		M-004 MECHANICAL SCHEDULES
Heat Pump with Supplemental electric Resistance Heater Controls per 110.2(b)		N/A

STATE OF CALIFORNIA
Mechanical Systems
CALIFORNIA ENERGY COMMISSION

CERTIFICATE OF COMPLIANCE		NRCC-MCH-E
Project Name: Santa Ana Bus Station	Report Page:	(Page 9 of 9)
Project Address: 4301 W. MacArthur Blvd, Santa Ana, CA, 92704	Date Prepared:	2023-12-05T15:51:16-05:00

DOCUMENTATION AUTHOR'S DECLARATION STATEMENT

I certify that this Certificate of Compliance documentation is accurate and complete.

Documentation Author Name: Ryan Walsh	Documentation Author Signature: Walsh, Ryan
Company: stantec	Signature Date: 12/5/2023
Address: 6385 Corporate Drive, Suite 200	CEA/ HERS Certification Identification (if applicable):
City/State/Zip: Colorado Springs, CO 80919	Phone: 860-964-0406

RESPONSIBLE PERSON'S DECLARATION STATEMENT

I certify the following under penalty of perjury, under the laws of the State of California:

1. The information provided on this Certificate of Compliance is true and correct.
2. I am eligible under Division 3 of the Business and Professions Code to accept responsibility for the building design or system design identified on this Certificate of Compliance (responsible designer)
3. The energy features and performance specifications, materials, components, and manufactured devices for the building design or system design identified on this Certificate of Compliance conform to the requirements of Title 24, Part 1 and Part 6 of the California Code of Regulations.
4. The building design features or system design features identified on this Certificate of Compliance are consistent with the information provided on other applicable compliance documents, worksheets, calculations, plans and specifications submitted to the enforcement agency for approval with this building permit application.
5. I will ensure that a completed signed copy of this Certificate of Compliance shall be made available with the building permit(s) issued for the building, and made available to the enforcement agency for all applicable inspections. I understand that a completed signed copy of this Certificate of Compliance is required to be included with the documentation the builder provides to the building owner at occupancy.

Responsible Designer Name: Ryan Walsh	Responsible Designer Signature: Walsh, Ryan
Company: stantec	Date Signed: 12/5/2023
Address: 6385 Corporate Drive, Suite 200	License: N/A
City/State/Zip: Colorado Springs, CO 80919	Phone: 860-964-0406

LICENSED PROFESSIONAL ENGINEER
SIYAR GALSTYAN
M-39730
EXP. 12/31/25
MECHANICAL
STATE OF CALIFORNIA

IFB 4-2550 EXHIBIT B

Stantec
801 S. Figueroa Street, Suite 300
Los Angeles, CA 90017

Copyright Reserved
The Contractor shall verify and be responsible for all dimensions. DO NOT scale the drawing - use dimensions as indicated or required by Stantec without delay.
This drawing is the property of Stantec and shall not be reproduced in whole or in part. Reproduction or use for any purpose other than that authorized by Stantec is forbidden.

REVISION	DESCRIPTION	DATE
	100% RESUBMITTAL	5/13/2024
	100% CONSTRUCTION DRAWING SUBMITTAL	3/27/2024
	90% UPDATED CONSTRUCTION SUBMITTAL	2/13/2024
	90% CONSTRUCTION DRAWING SUBMITTAL	12/07/2023

REPLACEMENT OF MECHANICAL UNITS AT SANTA ANA BUS BASE
4301 W. MAC ARTHUR BLVD., SANTA ANA, CA

TITLE 24 CODE COMPLIANCE

JOB #:	
DESIGN BY:	SG
DRAWN BY:	RW
CHECKED BY:	GY
DATE:	
SCALE:	
SHEET:	M-301P

OCTA
ORANGE COUNTY TRANSPORTATION AUTHORITY
550 SOUTH MAIN STREET, ORANGE, CA

Autodesk Docs://2014233703_Santa_Ana_Bus/mech_SantaAnaBus_2014233703.rvt
5/8/2024 11:15:08 AM

CIRCUITS
EMERGENCY NORMAL

RECEPTACLES

- SINGLE RECEPTACLE, 120V
- SINGLE RECEPTACLE, 120V, CEILING MOUNTED
- DUPLEX RECEPTACLE, 120V
- DUPLEX RECEPTACLE, 120V, CEILING MOUNTED
- DOUBLE DUPLEX RECEPTACLE, 120V
- DOUBLE DUPLEX RECEPTACLE, 120V, CEILING MOUNTED
- SPLIT WIRED RECEPTACLE, 120V, TOP CONTROLLED, BOTTOM CONSTANTLY ENERGIZED
- RECEPTACLE, NEMA #
- RECEPTACLE, NEMA #, CEILING MOUNTED
- COMBINATION RECEPTACLE, NEMA # AND 120V
- FURNITURE SYSTEMS RECEPTACLE, 120V
- N/A INDICATES FULLY CONTROLLED
- N/A INDICATES 15A
- N/A INDICATES TWIST LOCK
- N/A INDICATES MOUNTED ABOVE COUNTER BACKSPLASH
- N/A MULTI-SERVICE ASSEMBLY (RECEPTACLES AS INDICATED)
- N/A MULTI-SERVICE CEILING BOX (RECEPTACLES AS INDICATED)
- N/A MULTI-SERVICE FLOOR BOX (RECEPTACLES AS INDICATED)
- N/A MULTI-SERVICE FURNITURE BOX (RECEPTACLES AS INDICATED)
- N/A MULTI-SERVICE POKE THRU (RECEPTACLES AS INDICATED)
- N/A MULTI-SERVICE POWER POLE (RECEPTACLES AS INDICATED)
- N/A MULTI-SERVICE WALL BOX (RECEPTACLES AS INDICATED)
- N/A PLUG STRIP (HORIZONTAL/VERTICAL)
- N/A CLOCK RECEPTACLE, 120V
- CORD DROP, 120V
- CEILING CORD DROP, 120V

RECEPTACLE TYPES

- A ARC FAULT CIRCUIT INTERRUPTER
- AT ARC FAULT CIRCUIT INTERRUPTER AND TAMPER RESISTANT
- D DEDICATED CIRCUIT
- G GROUND FAULT CIRCUIT INTERRUPTER
- GT GROUND FAULT CIRCUIT INTERRUPTER AND TAMPER RESISTANT
- IG ISOLATED GROUND
- S SURGE PROTECTOR
- T TAMPER RESISTANT
- U INTEGRAL USB PORT(S)
- WP WEATHER RESISTANT COVER

CONTROLS

- NON-FUSED SAFETY SWITCH
- FUSED SAFETY SWITCH, FUSE RATING INDICATED
- COMBINATION MOTOR STARTER AND FUSED SAFETY SWITCH, FUSE RATING INDICATED
- MOTOR STARTER
- MANUAL MOTOR STARTER
- AUTOMATIC DOOR PUSHPLATE
- DEAD FRONT GFCI
- EMERGENCY SHUTDOWN
- ENCLOSED CIRCUIT BREAKER
- ENCLOSED CONTACTOR
- PUSH BUTTON CONTROL STATION
- $M TOGGLE SWITCH, MOTOR RATED
- TOUCHLESS AUTOMATIC DOOR OPENER
- DDC DIRECT DIGITAL CONTROL PANEL
- R RELAY
- T THERMOSTAT
- TC TIME CLOCK
- VFD VARIABLE FREQUENCY DRIVE

WORK DEFINITION

- NEW WORK
- EXISTING
- REMOVE EXISTING
- REMOVE EXISTING ELECTRICAL EQUIPMENT
- FUTURE
- TEMPORARY, AS NOTED
- ?##/## KEY NOTE
- ??? EQUIPMENT IDENTIFICATION
- XX/X-X MECHANICAL EQUIPMENT IDENTIFICATION

RACEWAYS

- RACEWAY CONCEALED IN CEILING OR WALL. EXPOSED RACEWAY IS ALLOWED ONLY WHERE NOTED.
- RACEWAY BELOW SLAB OR UNDERGROUND
- RACEWAY UP
- RACEWAY DOWN
- RACEWAY CONTINUATION
- RACEWAY STUB-OUT WITH BUSHING
- SURFACE RACEWAY (HORIZONTAL/VERTICAL)
- J JUNCTION BOX, CEILING OR ABOVE CEILING MOUNTED
- J JUNCTION BOX, WALL MOUNTED
- J JUNCTION BOX, IN-GROUND
- PB PULL BOX

ELECTRICAL EQUIPMENT

- 208V OR 240V POWER PANELBOARD
- 480V OR 600V POWER PANELBOARD
- EQUIPMENT CABINET OR PANEL
- EQUIPMENT CONNECTION, FILL INDICATES EMERGENCY CIRCUIT
- GROUND BAR
- MOTOR CONNECTION, 1Ø
- MOTOR CONNECTION, 3Ø
- BUS DUCT
- ATS AUTOMATIC TRANSFER SWITCH
- B BUS DUCT PLUG
- SPD SURGE PROTECTIVE DEVICE
- T TRANSFORMER, NOT TO SCALE
- TRANSFORMER, DRAWN TO SCALE

ABBREVIATIONS

#/C	MULTI-CONDUCTOR, # INDICTATES QUANTITY
(D)	DEMOLISH
(E)	EXISTING
(N)	NEW
(R)	EXISTING TO BE RELOCATED
1/C	SINGLE CONDUCTOR
A	AMPS
A/C	AIR CONDITIONING UNIT
AC	ALTERNATING CURRENT
ACH	ABOVE COUNTER HEIGHT
ACT	ACOUSTICAL CEILING TILE
ADA	AMERICANS WITH DISABILITIES ACT
ADJ	ADJUSTABLE
AF	AMP FRAME
AFC	ABOVE FINISHED CEILING
AFCI	ARC FAULT CIRCUIT INTERRUPTER
AFF	ABOVE FINISHED FLOOR
AFG	ABOVE FINISHED GRADE
AHJ	AUTHORITY HAVING JURISDICTION
AHU	AIR HANDLING UNIT
AIC	AMPERE INTERRUPTING CAPACITY
AL	ALUMINUM
ALD	ASSISTED LISTENING DEVICE
ALT	ALTERNATE
ARCH	ARCHITECTURAL
AS	AMP SWITCH
AT	AMP TRIP
ATS	AUTOMATIC TRANSFER SWITCH
AUTO	AUTOMATIC
AV	AUDIO VISUAL
AVG	AVERAGE
AWG	AMERICAN WIRE GAUGE
BC	BONDING CONDUCTOR
BCU	BARE COPPER
BFC	BELOW FINISHED CEILING
BFG	BELOW FINISHED GRADE
BKR	BREAKER
BLDG	BUILDING
BOF	BOTTOM OF FIXTURE
BOH	BACK OF HOUSE
BTM	BOTTOM
C	CONDUIT
C/W	COMPLETE WITH
CAP	CAPACITY
CATV	COMMUNITY ANTENNA TELEVISION
CB	CIRCUIT BREAKER
CCTV	CLOSED CIRCUIT TELEVISION
CEC	CANADIAN ELECTRIC CODE
CFOI	CONTRACTOR FURNISHED, OWNER INSTALLED
CIRC	CIRCULATING
CKT	CIRCUIT
CL	CENTERLINE
CLG	CEIILING
CM	CEIILING MOUNTED
CMU	CONCRETE MASONRY UNIT
CO	CONDUIT ONLY
COMM	COMMUNICATIONS
CONC	CONCRETE
CONN	CONNECTION
CONST	CONSTRUCTION
CONT	CONTINUOUS
CONTR	CONTRACTOR
CPT	CONTROL POWER TRANSFORMER
CPU	CENTRAL PROCESSING UNIT
CR	CRITICAL BRANCH
CT	CURRENT TRANSFORMERS
CTR	CENTER
CU	COPPER
CUH	CABINET UNIT HEATER
D	DEDICATED
DALI	DIGITAL ADDRESSABLE LIGHTING INTERFACE
DC	DIRECT CURRENT
DET	DETAIL
DIA	DIAMETER
DIM	DIMENSION
DISC	DISCONNECT
DIV	DIVISION
DL	DAMP LOCATION
DMX	DIGITAL MULTIPLEX
DMX-RDM	DIGITAL MULTIPLEX REMOTE DEVICE MANAGEMENT
DN	DOWN
DP	DISTRIBUTION PANEL
DPDT	DOUBLE POLE, DOUBLE THROW
DPR	DAMPER
DPST	DOUBLE POLE, SINGLE THROW
DWG	DRAWING
DWH	DOMESTIC WATER HEATER
EA	EACH
EC	ELECTRICAL CONTRACTOR
EF	EXHAUST FAN
ELEC	ELECTRICAL
ELEV	ELEVATOR
EM	EMERGENCY
EM GEN	EMERGENCY GENERATOR
EMT	ELECTRICAL METALLIC TUBING
ENCL	ENCLOSURE
EP	ELECTRIC-PNEUMATIC
EPO	EMERGENCY POWER OFF
EQ	EQUIPMENT BRANCH
EQUIP	EQUIPMENT

ABBREVIATIONS

ETD	EMERGENCY TRANSFER DEVICE
EWC	ELECTRIC WATER COOLER
EXH	EXHAUST
EXP	EXPLOSION PROOF
EXTER	EXTERIOR
F&I	FURNISHED AND INSTALLED
FA	FIRE ALARM
FAA	FIRE ALARM ANNUNCIATOR
FACP	FIRE ALARM CONTROL PANEL
FB	FLOOR BOX
FCU, FC	FAN COIL UNIT
FLR	FLOOR
FLUOR	FLUORESCENT
FO	FIBER (FIBRE) OPTIC
FOH	FRONT OF HOUSE
FP	FIRE PROTECTION
FPC	FORWARD PHASE CONTROL
FS	FUSIBLE SWITCH
FSCS	FIRE FIGHTER SMOKE CONTROL STATION
FU	FUSE
FVNR	FULL VOLTAGE NON REVERSING
FVR	FULL VOLTAGE REVERSING
G, GND	GROUND
G/Y	GREEN YELLOW
GA	GAUGE
GAL	GALLONS
GC	GENERAL CONTRACTOR
GEN	GENERATOR
GFI, GFCI	GROUND FAULT (CIRCUIT) INTERRUPTER
H	HOT CONDUCTOR
HC	HORIZONTAL CROSS CONNECT
HD	HAND DRYER
HFF	HANDS FREE FIXTURE
HH	HANDHOLE
HID	HIGH INTENSITY DISCHARGE
HK	HOUSE KEEPING PAD
HM	HORIZONTALLY MOUNTED
HOA	HAND-OFF-AUTO
HOR	HORIZONTAL
HP	HEAT PUMP
HP	HORSEPOWER
HT	HEATING
HV	HIGH VOLTAGE
HVCB	HIGH VOLTAGE CIRCUIT BREAKER
HW	HOT WATER
HZ	HERTZ
IC	INTERMEDIATE CROSS CONNECT
ID	INSIDE DIAMETER
IDF	INTERMEDIATE DISTRIBUTION FRAME
IG	ISOLATED GROUND
IMC	INTERMEDIATE METAL CONDUIT
INST	INSTANTANEOUS
IP	INTERNET PROTOCOL
JB	JUNCTION BOX
K	KIRK KEY INTERLOCK
KAIC	KILO-AMPS INTERRUPTING CAPACITY
KV	KILOVOLT
KVA	KILOVOLT-AMPERES
KW	KILOWATT
LED	LIGHT EMITTING DIODE
LR	LEGALLY REQUIRED
LS	LIFE SAFETY BRANCH
LSIG	LONG TIME, SHORT TIME, INSTANTANEOUS, GROUND FAULT LIGHTING
LTG	LIGHTING
LV	LOW VOLTAGE
MAU	MAKE UP AIR UNIT
MAX	MAXIMUM
MC	METAL CLAD CABLE
MCA	MINIMUM CIRCUIT AMPS
MCB	MAIN CIRCUIT BREAKER
MCC	MOTOR CONTROL CENTER
MCCB	MOLDED CASE CIRCUIT BREAKER
MCP	MOTOR CIRCUIT PROTECTOR
MCT	MAIN CROSS CONNECT
MDF	MAIN DISTRIBUTION FRAME
MDP	MAIN DISTRIBUTION PANEL
MECH	MECHANICAL
MET	MAIN EARTHING TERMINAL
MFR	MANUFACTURER
MH	MANHOLE
MIN	MINIMUM
MISC	MISCELLANEOUS
MLO	MAIN LUG ONLY
MM	MULTIMODE FIBER (FIBRE) OPTIC STRAND
MSB	MAIN SWITCHBOARD
MTD	MOUNTED
MTG	MOUNTING
MTS	MAIN TERMINAL SPACE
MV	MEDIUM VOLTAGE
MVCB	MEDIUM VOLTAGE CIRCUIT BREAKER
MW	MICROWAVE OVEN
N	NEUTRAL
NAC	NOTIFICATION APPLIANCE CIRCUIT
NC	NORMALLY CLOSED
NEC	NATIONAL ELECTRIC CODE
NEMA	NATIONAL ELECTRICAL MANUFACTURERS ASSOCIATION

ABBREVIATIONS

NIC	NOT IN CONTRACT
NL	NIGHT LIGHT
NO	NORMALLY OPEN
NTS	NOT TO SCALE
OC	ON CENTER
OD	OUTSIDE DIAMETER
OFCI	OWNER FURNISHED, CONTRACTOR INSTALLED
OFE	OWNER FURNISHED EQUIPMENT
OH	OVERHEAD
OL	OVERLOAD
OS	OCCUPANCY SENSOR, OPTIONAL STANDBY
OSP	OUTSIDE PLANT
P	POLE
PA	PUBLIC ADDRESS
PB	PULL BOX
PD	PUNCHDOWN
PF	POWER FACTOR
PNL	PANEL
POE	POINT OF ENTRANCE
POS	POINT OF SERVICE
PR	PAIR
PT	POTENTIAL TRANSFORMERS
PTS	PNEUMATIC TUBE STATION
PTZ	PAN/TILT/ZOOM
PV	PHOTOVOLTAIC
PVC	POLYVINYL CHLORIDE
PWR	POWER
RA	RETURN AIR
REC	RECESSED
RECP	RECEPTACLE
REQD	REQUIRED
REX	REQUEST TO EXIT
RM	ROOM
RNC	RIGID NON-METALLIC CONDUIT
RO	RACEWAY ONLY
RPC	REVERSE PHASE CUT
RSC, RGS	RIGID STEEL CONDUIT
SCCR	SHORT CIRCUIT CURRENT RATING
SEC	SECURITY
SECT	SECTION
SIM	SIMILAR
SM	SINGLE MODE FIBER OPTIC STRAND
SMR	SURFACE MOUNTED RACEWAY
SPD	SURGE PROTECTED DEVICE
SPDT	SINGLE POLE DOUBLE THROW
SPECS	SPECIFICATIONS
SPST	SINGLE POLE SINGLE THROW
SS	STAINLESS STEEL
ST	SHUNT TRIP
STD	STANDARD
SW	SWITCH
SWBD	SWITCHBOARD
SWGR	SWITCHGEAR
SYS	SYSTEM
TBB	TELECOMMUNICATIONS BACKBONE
TC	TEMPERATURE CONTROL OR TERMINAL CABINET
TE	TELECOMMUNICATIONS ENCLOSURE
TELE	TELEPHONE
TELECOM	TELECOMMUNICATIONS
TEMP	TEMPERATURE
TERM	TERMINAL
TGB	TELECOMMUNICATIONS GROUND BAR
TMGB	TELECOMMUNICATIONS MAIN GROUND BAR
TOF	TOP OF FIXTURE
TP	TAMPER RESISTANT
TR	TELECOMMUNICATIONS ROOM
TSP	TWISTED SHIELDED PAIR
TSTAT	THERMOSTAT
TTB	TELECOM TERMINAL BOARD
TV	TELEVISION
TYP	TYPICAL
UG	UNDERGROUND
UH	UNIT HEATER
UNO	UNLESS NOTED OTHERWISE
UNV	UNIVERSAL VOLTAGE
UPS	UNINTERRUPTIBLE POWER SUPPLY
USB	UNIVERSAL SERIAL BUS
UTP	UNSHIELDED TWISTED PAIR
UV	UNIT VENTILATOR
V	VOLTS
VA	VOLT-AMPS
VAV	VARIABLE AIR VOLUME
VC	VOLUME CONTROL
VDT	VISUAL DISPLAY TERMINAL
VERT	VERTICAL
VFD	VARIABLE FREQUENCY DRIVE
VIF	VERIFY IN FIELD
VOL	VOLUME
VT	VAPOR TIGHT
W	WIRE, WATT
WAP	WIRELESS ACCESS POINT
WG	WIREGUARD
WL	WET LOCATION
WP	WEATHERPROOF
WT	WATERTIGHT
XFMR	TRANSFORMER
Ø, PH	PHASE

PROJECT NOTES

1. THE ELECTRICAL CONTRACTOR SHALL OBTAIN ALL NECESSARY PERMITS FROM AUTHORITIES HAVING JURISDICTION AND PAY ALL ASSOCIATED FEES.
2. LOCATE JUNCTION AND PULL BOXES AS REQUIRED TO ALLOW ACCESS AFTER EQUIPMENT AND APPURTENANCES ARE INSTALLED. COORDINATE EXACT LOCATIONS WITH THE OTHER TRADES. COORDINATE LOCATIONS AND ELEVATIONS OF ELECTRICAL DEVICES WITH DRAWINGS AND OTHER TRADES PRIOR TO INSTALLATION.
3. PROTECT PERMANENT BUILDING FINISHES FROM DAMAGE DURING CONSTRUCTION PERIOD. PROVIDE PLYWOOD OR SIMILAR MATERIAL UNDER EQUIPMENT OR MATERIALS STORED ON FLOORS, AND IN AREAS WHERE CONSTRUCTION MAY DAMAGE FINISHES. SURFACES OR FINISHES DAMAGED DURING CONSTRUCTION SHALL BE REPLACED AT THE COST OF THE CONTRACTOR AT FAULT.
4. CONTRACTORS SHALL COORDINATE LOCATIONS OF FIXTURES AND ELECTRICAL DEVICES INSTALLED IN OR ON THE CEILING WITH ARCHITECTURAL REFLECTED CEILING PLAN. CEILING MOUNTED ELECTRICAL DEVICES SHALL BE MOUNTED IN THE CENTER OF THE CEILING TILES, UNLESS OTHERWISE NOTED.
5. WHERE DIRECTED TO USE OR RETAIN EXISTING CIRCUITS, AND THE CIRCUIT NUMBERS DIFFER FROM THE DRAWING, UPDATE DIRECTORIES AND RECORD DRAWINGS.
6. PROPERLY SUPPORT PER CODE LOW VOLTAGE CABLING NOT IN CONDUIT. IN AREAS SUCH AS CORRIDORS DESIGNATED FOR NEW CEILINGS AND FINISHES, SUPPORT EXISTING ELECTRICAL DEVICES AND EQUIPMENT IN AND ABOVE THE CEILING, INCLUDING CONDUIT AND CABLING. PROVIDE PROPER PERMANENT SUPPORT AS NEEDED TO COMPLY WITH CODE AND TAKE WEIGHT OFF CEILING SUPPORTS. REMOVE AND REINSTALL ELECTRICAL DEVICES AND EQUIPMENT AS NEEDED FOR PAINTING, WALL COVERINGS, CEILINGS, AND FINISH WORK. REFER TO ARCHITECTURAL DRAWINGS. LOW VOLTAGE CABLING LOCATED IN EXPOSED STRUCTURE (CEIILING) AREAS SHALL BE INSTALLED IN CONDUIT (OR CABLE TRAY, IF APPLICABLE) AND ROUTED TIGHT TO DECK. INSTALLATIONS NOT IN COMPLIANCE WITH THIS REQUIREMENT SHALL BE REMOVED AND REINSTALLED AT CONTRACTOR'S EXPENSE.
7. WHERE PROJECT PHASING IS INDICATED IN ANY PART OF THE WORKING DOCUMENT PACKAGE, ELECTRICAL CONTRACTOR IS TO PLAN WORK SO AS TO FACILITATE SUCH PHASING.
8. FOR BRANCH CIRCUITS OVER 75' (25 METERS) IN LENGTH (TOTAL ONE WAY) FROM THE PANEL, THE ELECTRICAL CONTRACTOR SHALL CALCULATE THE VOLTAGE DROP AND PROVIDE AN APPROPRIATE CONDUCTOR SIZE TO ACHIEVE NO MORE THAN 3% MAXIMUM ALLOWABLE VOLTAGE DROP.
9. DO NOT SCALE THE DRAWINGS. BECAUSE OF THE SCALE OF THE DRAWINGS, IT IS NOT POSSIBLE TO INDICATE ALL OFFSETS, FITTINGS OR OTHER SIMILAR ITEMS WHICH MAY BE REQUIRED TO MAKE A COMPLETE OPERATING SYSTEM. CAREFULLY INVESTIGATE CONDITIONS AFFECTING WORK AND INSTALL WORK IN SUCH MANNER THAT INTERFERENCES BETWEEN PIPES, CONDUITS, DUCTS, EQUIPMENT, ARCHITECTURAL AND STRUCTURAL FEATURES SHALL BE AVOIDED.

PROJECT DEMOLITION NOTES

1. ANY EXISTING WIRING SERVING DEVICES TO REMAIN IN SERVICE, AND WHICH IS INTERRUPTED BY WORK PERFORMED UNDER THIS CONTRACT, SHALL BE REROUTED TO MAINTAIN CIRCUIT CONTINUITY. ALL EXISTING SYSTEMS/DEVICES TO REMAIN. PRIOR TO COMMENCING WITH DEMOLITION, IDENTIFY ALL POWER, LIGHTING, COMMUNICATION, AND SIGNAL CIRCUITS PASSING THROUGH THE DEMOLITION AREA OR EXTENDING BEYOND THE DEMOLITION AREA. COORDINATE WITH DEMOLITION WORK OF OTHER TRADES.
2. THE EXISTING BUILDING MUST BE KEPT IN OPERATION AT ALL TIMES. MAINTAIN ELECTRICAL SERVICES AND SYSTEMS EXCEPT FOR EQUIPMENT BEING REPLACED BY THIS PROJECT. MAINTAIN CONTINUITY OF FIRE ALARM, LIFE SAFETY AND SECURITY SYSTEMS TO ALL OCCUPIED AREAS OF THE BUILDING THROUGHOUT THE CONSTRUCTION PERIOD. PROVIDE TEMPORARY WIRING AND BRANCH CIRCUITING AS NECESSARY TO MAINTAIN OPERATION OF EXISTING CIRCUITS AND SYSTEMS EXTENDING BEYOND REMODEL AREA. ASSUME FULL RESPONSIBILITY FOR ANY DISRUPTION TO EXISTING SERVICES. RECONNECT ANY SERVICES WHICH ARE TO REMAIN, AND WHICH HAVE BEEN DISCONNECTED DURING DEMOLITION OR CONSTRUCTION. ARRANGE WORK IN SUCH A MANNER THAT INTERRUPTIONS IN SERVICES OCCUR ONLY AT PRE-SCHEDULED TIMES. CARRY OUT THE WORK WITH A MINIMUM OF NOISE, DUST AND DISTURBANCE.
3. PERMANENTLY REMOVE ABANDONED ELECTRICAL EQUIPMENT, LIGHTING FIXTURES, ELECTRICAL DEVICES, POWER AND SIGNALLING WIRING DEVICES AND ASSOCIATED WIRE, RACEWAYS, AND/OR JUNCTION BOXES. THE REMOVAL OR RELOCATION OF EXISTING ELECTRICAL EQUIPMENT PRESENTLY CONCEALED IN EXISTING CONSTRUCTION SHALL BE COORDINATED WITH THE OWNER PRIOR TO REMOVAL OR RELOCATION. RACEWAYS AND CONDUCTORS SHALL BE REMOVED BACK TO THE SOURCE OR NEAREST REMAINING JUNCTION BOX OR DEVICE AS FAR AS PRACTICAL, OR WHERE COMPLETE REMOVAL NOT PRACTICAL, RENDERED PERMANENTLY SAFE.
4. ANY EXISTING SYSTEM OUTAGES SHALL BE OF MINIMUM DURATION AND AT A TIME ACCEPTABLE TO THE OWNER, ARRANGED A MINIMUM OF 10 WORKING DAYS IN ADVANCE. LONGER NOTICES AND/OR ADDITIONAL RESTRICTIONS PERTAINING TO OUTAGES MAY BE REQUIRED IN SOME INSTANCES, AS PER SPECIFICATIONS. VERIFY PROTOCOL WITH ALL PROJECT STAKEHOLDERS INCLUDING OWNER, TENANT, CONSTRUCTION MANAGER AND/OR USER GROUP(S) AS APPLICABLE.
5. ELECTRICAL EQUIPMENT, FIXTURES, AND/OR DEVICES SCHEDULED TO REMAIN OR TO BE RELOCATED THAT ARE DAMAGED DURING DEMOLITION SHALL BE REPLACED WITH SIMILAR TYPE AS APPROVED BY THE OWNER, AT NO ADDITIONAL CHARGE TO THE OWNER.
6. IN THE EVENT THAT DEMOLITION WORK AFFECTS THE STRUCTURAL SUPPORT OF EXISTING ELECTRICAL EQUIPMENT THAT IS TO REMAIN IN SERVICE, IT SHALL BE RE-SUPPORTED IN ACCORDANCE WITH ALL APPLICABLE CODES. PROVIDE TEMPORARY SUPPORTS WHERE REQUIRED.
7. UNUSED FLUSH MOUNTED DEVICES, OUTLET AND OTHER BOXES IN FINISHED AREAS SHALL BE REMOVED FROM WALL AND THE REMAINING HOLE PATCHED TO MATCH ADJACENT WALL SURFACES. UNUSED RACEWAYS AND SLEEVES SHALL BE CUT FLUSH AT CEILING, FLOOR OR WALL AND FILLED WITH GROUT OR REQUIRED FIRE SEALANT. UNUSED RACEWAYS ABOVE ACCESSIBLE CEILINGS SHALL BE REMOVED.
8. ELECTRICAL MATERIAL SCHEDULED FOR REMOVAL IS TO BE REMOVED FROM THE SITE AND PROPERLY DISPOSED OF AS PART OF THIS CONTRACT. ANY ELECTRICAL MATERIAL THE OWNER WISHES TO RETAIN TO BECOME THE PROPERTY OF THE OWNER AND TO BE REMOVED AND PLACED AT A LOCATION ON THE SITE AS DIRECTED BY THE OWNER.
9. THE DEMOLITION DRAWINGS SHOW THE GENERAL SCOPE OF THE DEMOLITION AND NOT EXACT DETAILS OR TOTAL EXTENT. FOR EXACT DETAILS AND TOTAL EXTENT, EACH SERVICE MUST BE CAREFULLY CHECKED ON SITE. BEFORE REMOVING SERVICES FOLLOW THE SERVICE THROUGH TO ENSURE OTHER AREAS OF THE BUILDING ARE NOT AFFECTED.

NEW THERMOSTATS FOR ALL NEW MECHANICAL UNITS ARE GOING TO BE PROVIDED BY MECHANICAL.
REFER TO GENERAL NOTES ON MECHANICAL SET OF DRAWINGS.

REGISTERED PROFESSIONAL ENGINEER
PAUL K. ERICSON
No. 11219
exp.06/30/2025
ELECTRICAL
STATE OF CALIFORNIA

05-13-2024

IFB 4-2550 EXHIBIT B

Stantec
801 S. Figueroa Street, Suite 300
Los Angeles, CA 90017

Copyright Reserved
The contractor shall verify and be responsible for all dimensions. DO NOT scale the drawing - any errors or omissions shall be reported to Stantec without delay.
The copyrights to all designs and drawings are the property of Stantec. Reproduction or use for any purpose other than that authorized by Stantec is prohibited.

REVISION	DESCRIPTION	DATE
4	100% RESUBMITTAL	05/13/2024
3	100% CONSTRUCTION DRAWING SUBMITTAL	03/27/2024
2	90% UPDATED CONSTRUCTION SUBMITTAL	02/13/2024
1	90% CONSTRUCTION DRAWING SUBMITTAL	12/07/2023

REPLACEMENT OF MECHANICAL UNITS AT SANTA ANA BUS BASE
4301 W. MAC ARTHUR BLVD., SANTA ANA, CA

SYMBOLS, NOTES AND ANNOTATIONS

JOB #:	
DESIGN BY:	IZ
DRAWN BY:	ERL
CHECKED BY:	PKE
DATE:	02/13/2024
SCALE:	12" = 1'-0"
SHEET:	E-001P

OCTA
ORANGE COUNTY TRANSPORTATION AUTHORITY
550 SOUTH MAIN STREET, ORANGE, CA

Autodesk Docs://2014233703_Santa_Ana_Bus/elec_SantaAnaBus_2014233703.rvt
5/8/2024 9:59:41 AM

SCHEMATICS

CABLE IDENTIFICATION, TABLE

C01 / 3 1 1

- CIRCUIT IDENTIFICATION, SEE FEEDER TABLE
  - A = ALUMINUM
  - C = COPPER
  - M = METAL CLAD
- QUANTITY OF GROUND CONDUCTORS, SIZE PER FEEDER TABLE
  - 0 = NOT REQUIRED
  - 1 = 1 GROUND CONDUCTOR
  - 2 = 1 GROUND CONDUCTOR AND 1 ISOLATED GROUND CONDUCTOR
- QUANTITY OF NEUTRAL CONDUCTORS, SIZE PER FEEDER TABLE
  - 0 = NOT REQUIRED
  - 1 = 1 NEUTRAL CONDUCTOR
  - 2 = 2 NEUTRAL CONDUCTORS
- QUANTITY OF PHASE CONDUCTORS, SIZE PER FEEDER TABLE

CABLE IDENTIFICATION, TEXT

4 #12+ 1 #12G, [SIZE]C

- CONDUIT SIZE
- QUANTITY AND SIZE OF GROUNDS
- QUANTITY AND SIZE OF CONDUCTORS

CABLE IDENTIFICATION, TEXT

CONDUIT SIZE

4 SETS (3×1/C 600 kcmil +1 #3/0G, Cu, 15kV, 133%, TR-XLPE, [SIZE]C)

- CABLE TYPE
- INSULATION LEVEL
- INSULATION VOLTS
- MATERIAL
- QUANTITY AND SIZE OF GROUNDS
- QUANTITY AND SIZE OF CONDUCTORS
- QUANTITY OF SETS

#×1/C SINGLE CONDUCTOR CABLE, # INDICATES QUANTITY OF CABLES

#/C MULTI-CONDUCTOR CABLE, # INDICATES QUANTITY OF CONDUCTORS

SHORT CIRCUIT CURRENT RATING, # INDICATES RATING

BUS DUCT

BUS

FEEDER

NAME LOCATION 225 A MCB 480 V 3 Ø, 4 W 42 CCT	NAME LOCATION 225 A MCB 480 V 3 Ø, 4 W 42 CCT	NAME	NAME LOCATION 225 A MCB 480 V 3 Ø, 4 W 42 CCT	NAME LOCATION 225 A MCB 480 V 3 Ø, 4 W 42 CCT
PANEL, SINGLE TUB	PANEL, DOUBLE TUB, MAIN LUGS		PANEL, DOUBLE TUB, FEED THRU LUGS	

SCHEMATICS

AC/DC INVERTER
AUTOTRANSFORMER
AUTOMATIC TRANSFER SWITCH, DUAL BYPASS
AUTOMATIC TRANSFER SWITCH, SINGLE BYPASS
BATTERY
BIMETALLIC THERMAL OVERLOAD
CAPACITOR
CIRCUIT BREAKER, LOW VOLTAGE, DRAW OUT
CIRCUIT BREAKER, LOW VOLTAGE, FIXED
CIRCUIT BREAKER, LOW VOLTAGE, WITH LIMITER
CIRCUIT BREAKER, MEDIUM VOLTAGE, DRAW OUT
CIRCUIT BREAKER, MEDIUM VOLTAGE, FIXED
CIRCUIT BREAKER, MEDIUM VOLTAGE, VACUUM INTERRUPTER
CONNECTION, CONNECTED
CONNECTION, DRAW OUT, DISCONNECTED
CONNECTION, FEED FROM/TO
CONNECTION, SPLICE
CONTACT
CURRENT TRANSFORMER
DEAD BREAK ELBOW
DRAW OUT FUSE AND POTENTIAL TRANSFORMER
FUSE
FUSED CUTOUT
GROUND
GROUND STUD
INDUCTOR
LIGHTNING ARRESTOR, GAP TYPE
LIGHTNING ARRESTOR, MOV TYPE
LOAD BREAK ELBOW
NOT CONNECTED
POTENTIAL TRANSFORMER
POTHEAD
STRESS CONE
SWITCH, FUSED LOAD BREAK
SWITCH, NON-FUSED LOAD BREAK
SWITCH, NON-FUSED DOUBLE LOAD BREAK
SWITCH, NON-FUSED LOAD BREAK WITH GROUNDING POSITION
RESISTOR
? TERMINAL BLOCK

SCHEMATICS

TRANSFER SWITCH
TRANSFORMER
TRANSFORMER CONFIGURATION, DELTA
TRANSFORMER CONFIGURATION, DELTA, CORNER GROUND
TRANSFORMER CONFIGURATION, DELTA, OPEN
TRANSFORMER CONFIGURATION, WYE
TRANSFORMER CONFIGURATION, WYE, INDUCTOR, CURRENT TRANSFORMER, GROUND
TRANSFORMER CONFIGURATION, WYE, RESISTOR, CURRENT TRANSFORMER, GROUND
TRANSFORMER CONFIGURATION, WYE, RESISTOR, GROUND
TRANSFORMER CONFIGURATION, WYE, SOLID GROUND
TRANSFORMER CONFIGURATION, ZIGZAG
ZERO SEQUENCE CURRENT TRANSFORMER
50 RELAY, SINGLE FUNCTION
50/51 RELAY, DUAL FUNCTION
50 50 50 / 50 50 50 RELAY, MULTIFUNCTION
A AMMETER
AS AMPERAGE METER SWITCH
DMS DIGITAL METERING SYSTEM
G GENERATOR
K KEY OPERATED SWITCH
LSIG RELAY, TRIP UNIT
LSIG DRAW OUT BREAKER C/W INTEGRAL SOLID STATE TRIP UNIT
LSIG DRAW OUT BREAKER C/W SERIES ELECTROMECHANICAL TRIP UNIT
M INLINE SOCKET METER
METER METER
O/L ELECTRONIC THERMAL OVERLOAD
SB SHORTING BLOCK
SPACE SPACE, DRAW OUT BREAKER
SPACE SPACE, FIXED BREAKER
SPD SURGE PROTECTION DEVICE
TS TEST SWITCH
V VOLTMETER
VS VOLTAGE METER SWITCH
X INDICATOR, VOLTAGE PRESENT

STANDARD MOUNTING HEIGHTS

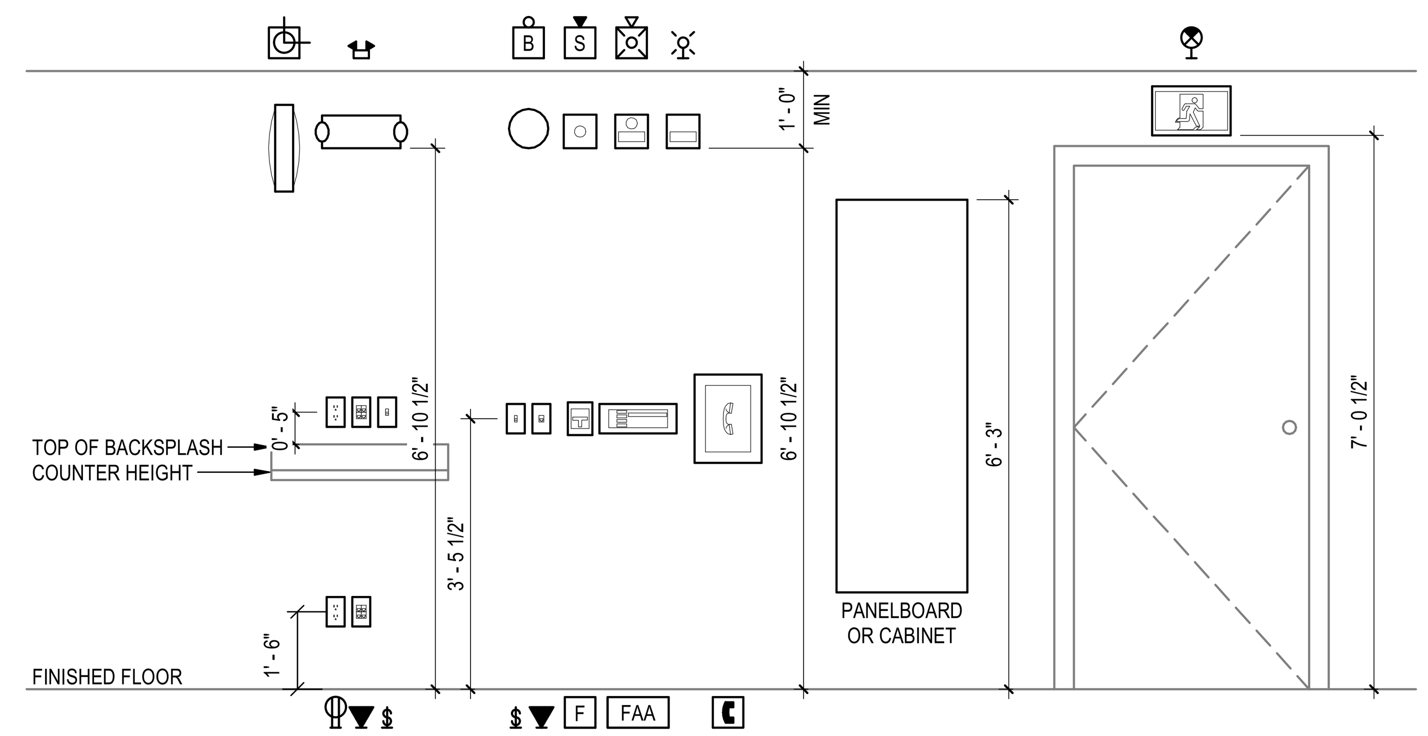

DRAWING INDEX

NO.	DRAWING NAME
E-001	SYMBOLS, NOTES AND ANNOTATIONS
E-002	SCHEMATIC SYMBOLS AND ELECTRICAL DRAWING INDEX
E-210	OPERATIONS BUILDING ELECTRICAL ROOF PLAN
E-220	MAINTENANCE BUILDING OVERALL ELECTRICAL ROOF PLAN
E-221	MAINTENANCE BUILDING SECTION ONE ELECTRICAL ROOF PLAN
E-222	MAINTENANCE BUILDING SECTION TWO ELECTRICAL ROOF PLAN
E-223	MAINTENANCE BUILDING SECTION THREE ELECTRICAL ROOF PLAN
E-230	FUEL/BRAKE/TIRE REPAIR BUILDING ELECTRICAL ROOF PLAN
E-240	BUS WASH/BRAKE DYNO BUILDING ELECTRICAL ROOF PLAN
E-250	DETAIL/CLEANING BUILDING ELECTRICAL ROOF PLAN
E-600	ELECTRICAL SINGLE LINE DIAGRAM
E-601	ELECTRICAL SINGLE LINE DIAGRAM
E-700	PANEL SCHEDULES
E-701	PANEL SCHEDULES
E-702	PANEL SCHEDULES
E-703	PANEL SCHEDULES
E-704	PANEL SCHEDULES
E-800	CONDUIT SCHEDULES
E-801	CONDUIT SCHEDULES
E-802	CONDUIT SCHEDULES

ALUMINUM FEEDERS

ID	NOMINAL CIRCUIT RATING	SETS	CONDUCTORS	GROUND	CONDUIT W/ N (4W)	CONDUIT W/O N (3W)
A01	100	1	#1/0	#6	2"	2"
A02	125	1	#2/0	#4	2"	2"
A03	150	1	#3/0	#4	2"	2"
A04	175	1	#4/0	#4	2 1/2"	2"
A05	200	1	250 kcmil	#4	2 1/2"	2 1/2"
A06	225	1	350 kcmil	#2	3"	2 1/2"
A07	250	1	350 kcmil	#2	3"	2 1/2"
A08	300	1	500 kcmil	#2	3 1/2"	3"
A09	350	1	750 kcmil	#1	4"	3 1/2"
A10	400	2	250 kcmil	#1	2 1/2"	2 1/2"
A11	450	2	350 kcmil	#1/0	3"	2 1/2"
A12	500	2	350 kcmil	#1/0	3"	2 1/2"
A13	600	2	500 kcmil	#2/0	3 1/2"	3"
A14	800	3	350 kcmil	#3/0	3"	3"
A15	900	3	500 kcmil	#4/0	3 1/2"	3"
A16	1000	3	600 kcmil	#4/0	4"	4"
A17	1200	4	500 kcmil	250 kcmil	3 1/2"	3"
A18	1600	6	400 kcmil	350 kcmil	3"	2 1/2"
A19	2000	6	750 kcmil	500 kcmil	4"	4"
A20	2500	7	750 kcmil	750 kcmil	5"	4"
A21	3000	8	750 kcmil	750 kcmil	5"	4"
A22	4000	11	750 kcmil	750 kcmil	5"	4"

FEEDER GENERAL NOTES:

1. COPPER CONDUCTORS ARE BASED ON TYPE THHN/THWN COPPER CONDUCTORS ONLY. CONDUITS BASED ON THHN/THWN CONDUCTORS ONLY. OTHER CONDUCTORS MAY REQUIRE LARGER CONDUITS.
2. ALUMINUM CONDUCTORS ARE BASED ON TYPE XHHN COMPACT STRANDED ALUMINUM CONDUCTORS ONLY. CONDUITS BASED ON XHHN CONDUCTORS ONLY. OTHER CONDUCTORS MAY REQUIRE LARGER CONDUITS.

COPPER FEEDERS

ID	NOMINAL CIRCUIT RATING	SETS	CONDUCTORS	BOND	CONDUIT W/ NEUTRAL (4W)	CONDUIT W/O NEUTRAL (3W)	MAXIMUM LENGTH*
C01	20	1	#12	#12	3/4"	3/4"	
C02	30	1	#10	#12	3/4"	3/4"	
C03	40	1	#8	#10	3/4"	3/4"	
C04	50	1	#6	#10	1"	3/4"	
C05A	60	1	#4	#10	1"	1"	*BASED ON 75 DEGREE
C05B	60	1	#4	#10	1 1/4"	1 1/4"	*BASED ON 60 DEGREE
C06	70	1	#4	#8	1 1/4"	1 1/4"	
C07A	80	1	#4	#8	1 1/4"	1 1/4"	*BASED ON 75 DEGREE
C07B	80	1	#3	#8	1 1/4"	1 1/4"	*BASED ON 60 DEGREE
C08	90	1	#3	#8	1 1/4"	1 1/4"	
C09A	100	1	#3	#8	1 1/4"	1 1/4"	*BASED ON 75 DEGREE
C09B	100	1	#1	#6	1 1/2"	1 1/2"	*BASED ON 60 DEGREE
C10	125	1	#1	#6	1 1/2"	1 1/2"	
C11	150	1	#1/0	#6	2"	1 1/2"	
C12	175	1	#2/0	#6	2"	2"	
C13	200	1	#3/0	#6	2"	2"	
C14	225	1	#4/0	#4	2 1/2"	2"	
C15	250	1	250 kcmil	#4	2 1/2"	2 1/2"	
C16	300	1	350 kcmil	#3	3"	2 1/2"	
C17	350	1	500 kcmil	#3	3 1/2"	3"	
C18	400	2	#3/0	#6	2"	2"	
C19	450	2	#4/0	#4	2 1/2"	2"	
C20	500	2	250 kcmil	#4	2 1/2"	2 1/2"	
C21	600	2	350 kcmil	#3	3"	2 1/2"	
C22A	800	3	350 kcmil	#3	3"	2 1/2"	
C22B	800	4	#3/0	#6	2"	2"	
C23	900	3	350 kcmil	#3	3"	2 1/2"	
C24	1000	3	500 kcmil	#3	3 1/2"	3"	
C25	1200	4	350 kcmil	#3	3"	2 1/2"	
C26	1600	5	500 kcmil	#3	3 1/2"	3"	
C27	2000	6	500 kcmil	#3	3 1/2"	3"	
C28	2500	7	500 kcmil	#3	3 1/2"	3"	
C29	3000	8	500 kcmil	#3	3 1/2"	3"	
C30	4000	11	500 kcmil	#3	3 1/2"	3"	

Stantec
801 S. Figueroa Street, Suite 300
Los Angeles, CA 90017

Copyright Reserved
The Contractor shall verify and be responsible for all dimensions. DO NOT scale the drawing - any errors or omissions shall be reported to Stantec without delay.
The Copyrights to all designs and drawings are the property of Stantec. Reproduction or use for any purpose other than that authorized by Stantec is forbidden.

REVISION	DESCRIPTION	DATE
4	100% RESUBMITTAL	05/13/2024
3	100% CONSTRUCTION DRAWING SUBMITTAL	03/27/2024
2	90% UPDATED CONSTRUCTION SUBMITTAL	02/13/2024
1	90% CONSTRUCTION DRAWING SUBMITTAL	12/07/2023

REPLACEMENT OF MECHANICAL UNITS AT SANTA ANA BUS BASE
4301 W. MAC ARTHUR BLVD., SANTA ANA, CA

SCHEMATIC SYMBOLS AND ELECTRICAL DRAWING INDEX

JOB #:
DESIGN BY: IZ
DRAWN BY: ERL
CHECKED BY: PKE
DATE: 02/13/2024
SCALE: As indicated
SHEET: E-002P

REGISTERED PROFESSIONAL ENGINEER
PAUL K. ERICSON
No. 11219
exp.06/30/2025
ELECTRICAL
STATE OF CALIFORNIA

05-13-2024

OCTA
ORANGE COUNTY
TRANSPORTATION AUTHORITY
550 SOUTH MAIN STREET, ORANGE, CA

Autodesk Docs://2014233703_Santa_Ana_Bus/elec_SantaAnaBus_2014233703.rvt
5/8/2024 9:59:42 AM

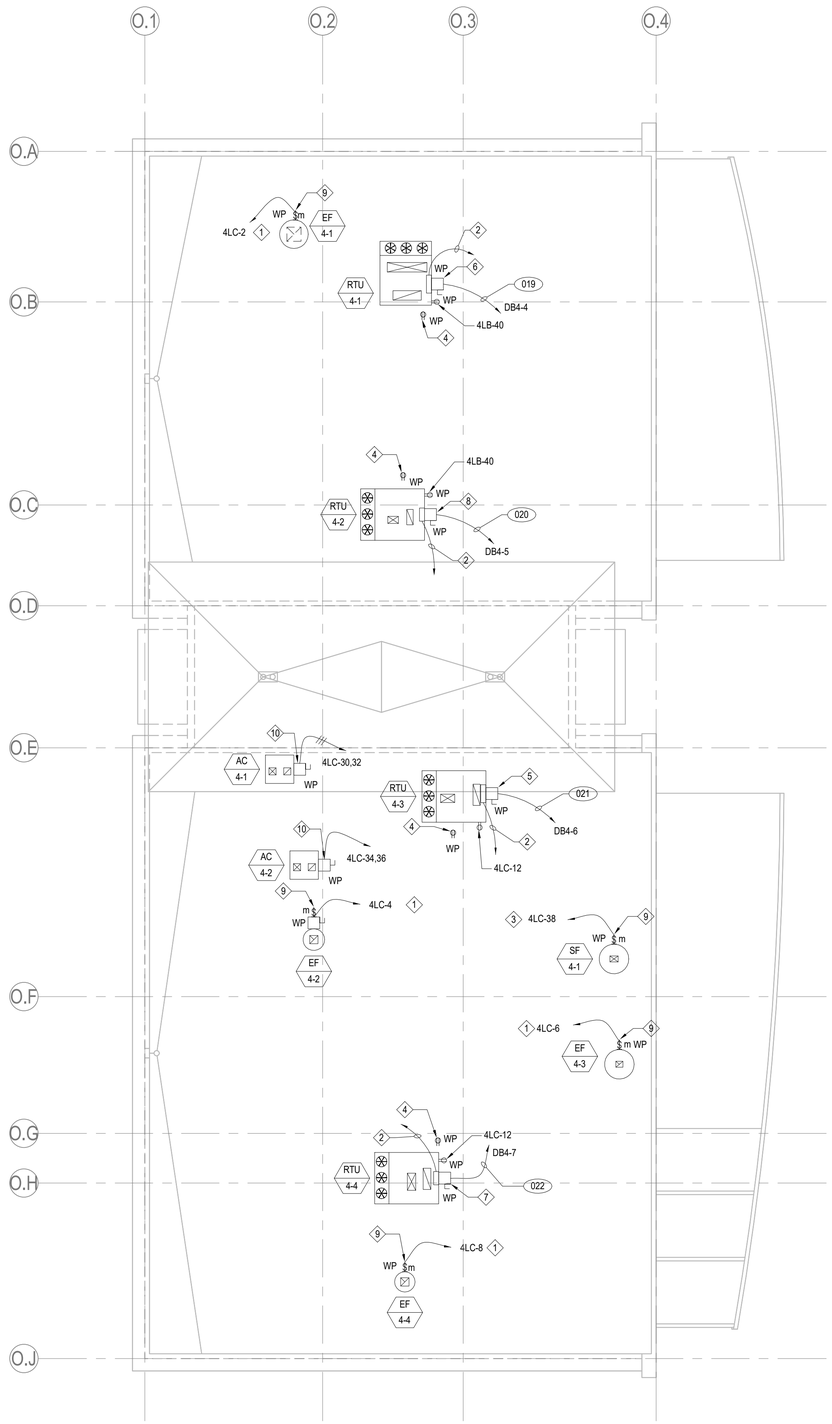

1 OPERATIONS BUILDING ELECTRICAL ROOF PLAN

E-210

3/32" = 1'-0"

N

GENERAL NOTES

1. ALL THE SIZES OF ELECTRICAL DISCONNECT SWITCHES, MOTOR RATED SWITCHES, CONDUIT AND WIRE SIZES FOR THE MECHANICAL EQUIPMENT ARE BASED ON NEW MECHANICAL EQUIPMENT THAT IS GOING TO BE INSTALLED.
2. ALL ELECTRICAL EQUIPMENT INSTALLED OUTDOORS SHALL BE IN WEATHER PROOF ENCLOSURES PER CEC 406.
3. REFER TO SHEETS E-800, E-801 AND E-802 CONDUIT SCHEDULES FOR VOLTAGE, PHASE, CONDUIT AND WIRE SIZES FOR ALL MECHANICAL EQUIPMENT BEING REPLACED.
4. ALL THE EXISTING CONNECTIONS SPECIFIED IN NOTES 1, 2 & 3 SHALL BE PROVIDED FOR THE NEW MECHANICAL EQUIPMENT.
5. NEW DISCONNECT SWITCHES TO BE PROVIDED AND INSTALLED TO MATCH EXISTING CONDITIONS.
6. KEY NOTES ARE PER SHEET NOT PER PROJECT.

KEY NOTES:

1 VIA TIMECLOCK TC4-1 IN ROOM 103.

2 SMOKE DETECTOR CONTACT TO 'FACP'.

3 VIA RELAY R1 IN ROOM 103.

4 EXISTING RECEPTACLE TO REMAIN. PROTECT IN PLACE.

5 PROVIDE NEW 480V, 3PH, 60A DS, 40AF. CONNECT TO EXISTING CIRCUIT AS INDICATED, CONTRACTOR TO REPLACE THE PORTION OF CONDUIT THAT IS EXPOSED ABOVE THE ROOF AND PROVIDE NEW CONDUCTORS TO MATCH EXISTING. EXTEND EXISTING CONDUIT AND WIRES AND CONNECT THE NEW INTEGRATED RECEPTACLE PROVIDED WITH NEW MECHANICAL EQUIPMENT TO EXISTING CIRCUIT AS INDICATED.

6 PROVIDE NEW 480V, 3PH, 60A DS, 50AF. CONNECT TO EXISTING CIRCUIT AS INDICATED, CONTRACTOR TO REPLACE THE PORTION OF CONDUIT THAT IS EXPOSED ABOVE THE ROOF AND PROVIDE NEW CONDUCTORS TO MATCH EXISTING. EXTEND EXISTING CONDUIT AND WIRES AND CONNECT THE NEW INTEGRATED RECEPTACLE PROVIDED WITH NEW MECHANICAL EQUIPMENT TO EXISTING CIRCUIT AS INDICATED.

7 PROVIDE NEW 480V, 3PH, 30A DS, 30AF. CONNECT TO EXISTING CIRCUIT AS INDICATED, CONTRACTOR TO REPLACE THE PORTION OF CONDUIT THAT IS EXPOSED ABOVE THE ROOF AND PROVIDE NEW CONDUCTORS TO MATCH EXISTING. EXTEND EXISTING CONDUIT AND WIRES AND CONNECT THE NEW INTEGRATED RECEPTACLE PROVIDED WITH NEW MECHANICAL EQUIPMENT TO EXISTING CIRCUIT AS INDICATED.

8 PROVIDE NEW 480V, 3PH, 30A DS, 20AF. CONNECT TO EXISTING CIRCUIT AS INDICATED, CONTRACTOR TO REPLACE THE PORTION OF CONDUIT THAT IS EXPOSED ABOVE THE ROOF AND PROVIDE NEW CONDUCTORS TO MATCH EXISTING. EXTEND EXISTING CONDUIT AND WIRES AND CONNECT THE NEW INTEGRATED RECEPTACLE PROVIDED WITH NEW MECHANICAL EQUIPMENT TO EXISTING CIRCUIT AS INDICATED.

9 PROVIDE NEW 120V, 1PH, MOTOR RATED MANUAL SWITCH. CONNECT TO EXISTING CIRCUIT AS INDICATED. CONTRACTOR TO REPLACE THE PORTION OF CONDUIT THAT IS EXPOSED ABOVE THE ROOF, PROVIDE NEW CONDUCTORS TO MATCH EXISTING.

10 PROVIDE NEW 208V, 1PH, 30A DS, 25AF. CONNECT TO EXISTING CIRCUIT AS INDICATED, CONTRACTOR TO REPLACE THE PORTION OF CONDUIT THAT IS EXPOSED ABOVE THE ROOF, PROVIDE NEW CONDUCTORS TO MATCH EXISTING.

REGISTERED PROFESSIONAL ENGINEER
PAUL K. ERICSON
No. 11219
exp.06/30/2025
ELECTRICAL
STATE OF CALIFORNIA

05-13-2024

Stantec
801 S. Figueroa Street, Suite 300
Los Angeles, CA 90017

Copyright Reserved
The contractor shall verify and be responsible for all dimensions. DO NOT scale the drawing - any errors or omissions shall be reported to Stantec without delay.
This drawing is the property of Stantec and must be returned on request. Reproduction or use for any purpose other than that authorized by Stantec is forbidden.

REVISION	DESCRIPTION	DATE
4	100% RESUBMITTAL	05/13/2024
3	100% CONSTRUCTION DRAWING SUBMITTAL	03/27/2024
2	90% UPDATED CONSTRUCTION SUBMITTAL	02/13/2024
1	90% CONSTRUCTION DRAWING SUBMITTAL	12/07/2023

REPLACEMENT OF MECHANICAL UNITS AT SANTA ANA BUS BASE

4301 W. MAC ARTHUR BLVD., SANTA ANA, CA

OPERATIONS BUILDING ELECTRICAL ROOF PLAN

JOB #:	
DESIGN BY:	IZ
DRAWN BY:	ERL
CHECKED BY:	PKE
DATE:	02/13/2024
SCALE:	As indicated
SHEET:	E-210P

OCTA

ORANGE COUNTY TRANSPORTATION AUTHORITY
550 SOUTH MAIN STREET, ORANGE, CA

Autodesk Docs://2014233703_Santa_Ana_Bus/elec_SantaAnaBus_2014233703.rvt
5/8/2024 9:59:43 AM

IFB 4-2550 EXHIBIT B

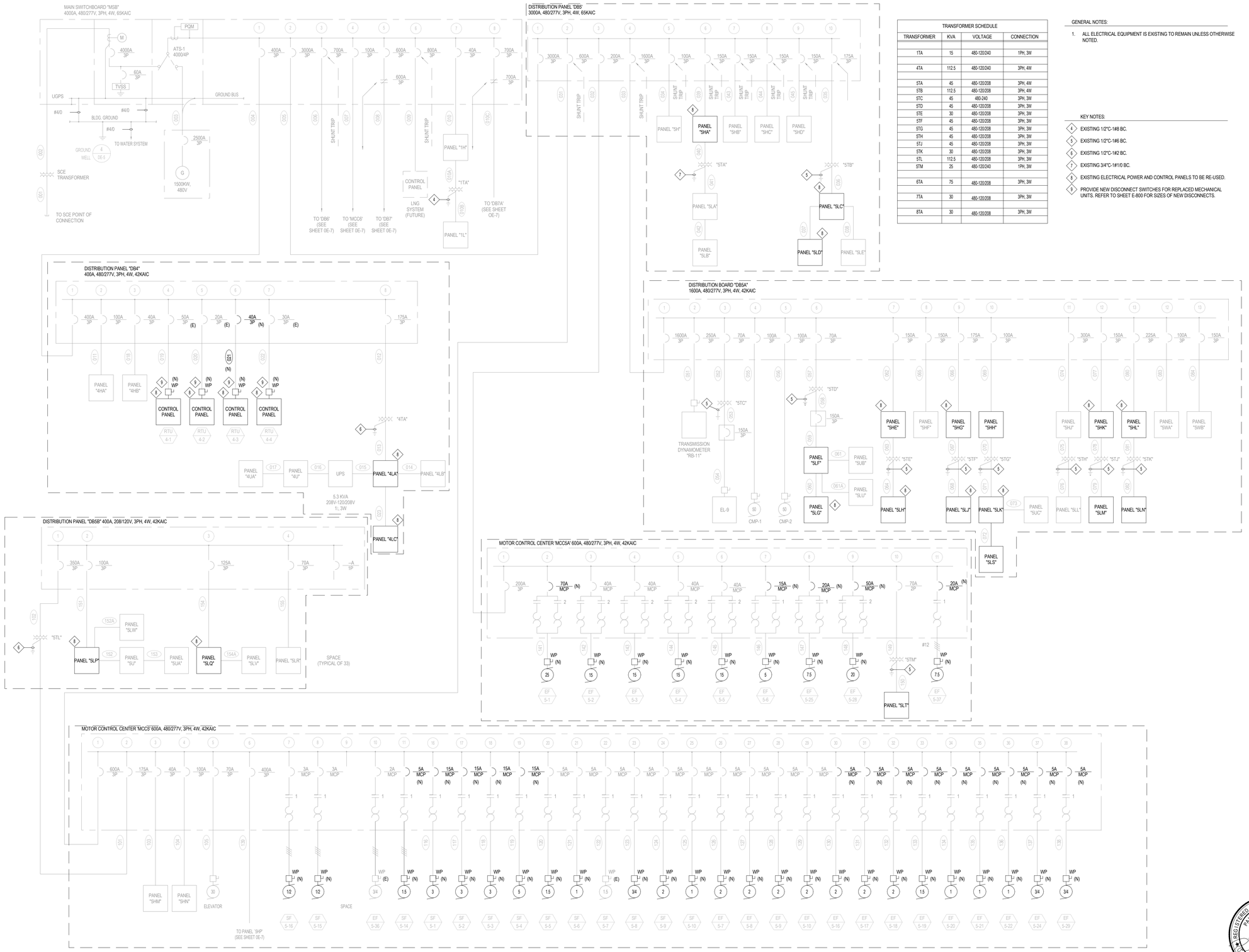

TRANSFORMER SCHEDULE			
TRANSFORMER	KVA	VOLTAGE	CONNECTION
1TA	15	480-120/240	1PH, 3W
4TA	112.5	480-120/240	3PH, 4W
5TA	45	480-120/208	3PH, 4W
5TB	112.5	480-120/208	3PH, 4W
5TC	45	480-240	3PH, 3W
5TD	45	480-120/208	3PH, 3W
5TE	30	480-120/208	3PH, 3W
5TF	45	480-120/208	3PH, 3W
5TG	45	480-120/208	3PH, 3W
5TH	45	480-120/208	3PH, 3W
5TJ	45	480-120/208	3PH, 3W
5TK	30	480-120/208	3PH, 3W
5TL	112.5	480-120/208	3PH, 3W
5TM	25	480-120/240	1PH, 3W
6TA	75	480-120/208	3PH, 3W
7TA	30	480-120/208	3PH, 3W
8TA	30	480-120/208	3PH, 3W

GENERAL NOTES:

1. ALL ELECTRICAL EQUIPMENT IS EXISTING TO REMAIN UNLESS OTHERWISE NOTED.

KEY NOTES:

4. EXISTING 1/2"C-1#8 BC.
5. EXISTING 1/2"C-1#6 BC.
6. EXISTING 1/2"C-1#2 BC.
7. EXISTING 3/4"C-1#1/0 BC.
8. EXISTING ELECTRICAL POWER AND CONTROL PANELS TO BE RE-USED.
9. PROVIDE NEW DISCONNECT SWITCHES FOR REPLACED MECHANICAL UNITS. REFER TO SHEET E-800 FOR SIZES OF NEW DISCONNECTS.

REGISTERED PROFESSIONAL ENGINEER
PAUL K. ERICSON
No. 11219
exp.06/30/2025
ELECTRICAL
STATE OF CALIFORNIA

05-13-2024

Stantec

801 S. Figueroa Street, Suite 300
Los Angeles, CA 90017

Copyright Reserved
The Contractor shall verify and be responsible for all dimensions. DO NOT scale the drawing - any errors or omissions shall be reported to Stantec without delay.
The Copyright in all designs and drawings are the property of Stantec. Reproduction or use for any purpose other than that authorized by Stantec is forbidden.

REVISION	DESCRIPTION	DATE
4	100% RESUBMITTAL	05/13/2024
3	100% CONSTRUCTION DRAWING SUBMITTAL	03/27/2024
2	90% UPDATED CONSTRUCTION SUBMITTAL	02/13/2024
1	90% CONSTRUCTION DRAWING SUBMITTAL	12/07/2023

REPLACEMENT OF MECHANICAL UNITS AT SANTA ANA BUS BASE
4301 W. MAC ARTHUR BLVD., SANTA ANA, CA

ELECTRICAL SINGLE LINE DIAGRAM

JOB #:	
DESIGN BY:	IZ
DRAWN BY:	ERL
CHECKED BY:	PKE
DATE:	02/13/2024
SCALE:	NTS
SHEET:	E-600P

OCTA

ORANGE COUNTY
TRANSPORTATION AUTHORITY
550 SOUTH MAIN STREET, ORANGE, CA

Autodesk Docs://2014233703_Santa_Ana_Bus/elec_SantaAnaBus_2014233703.rvt

5/8/2024 9:59:45 AM

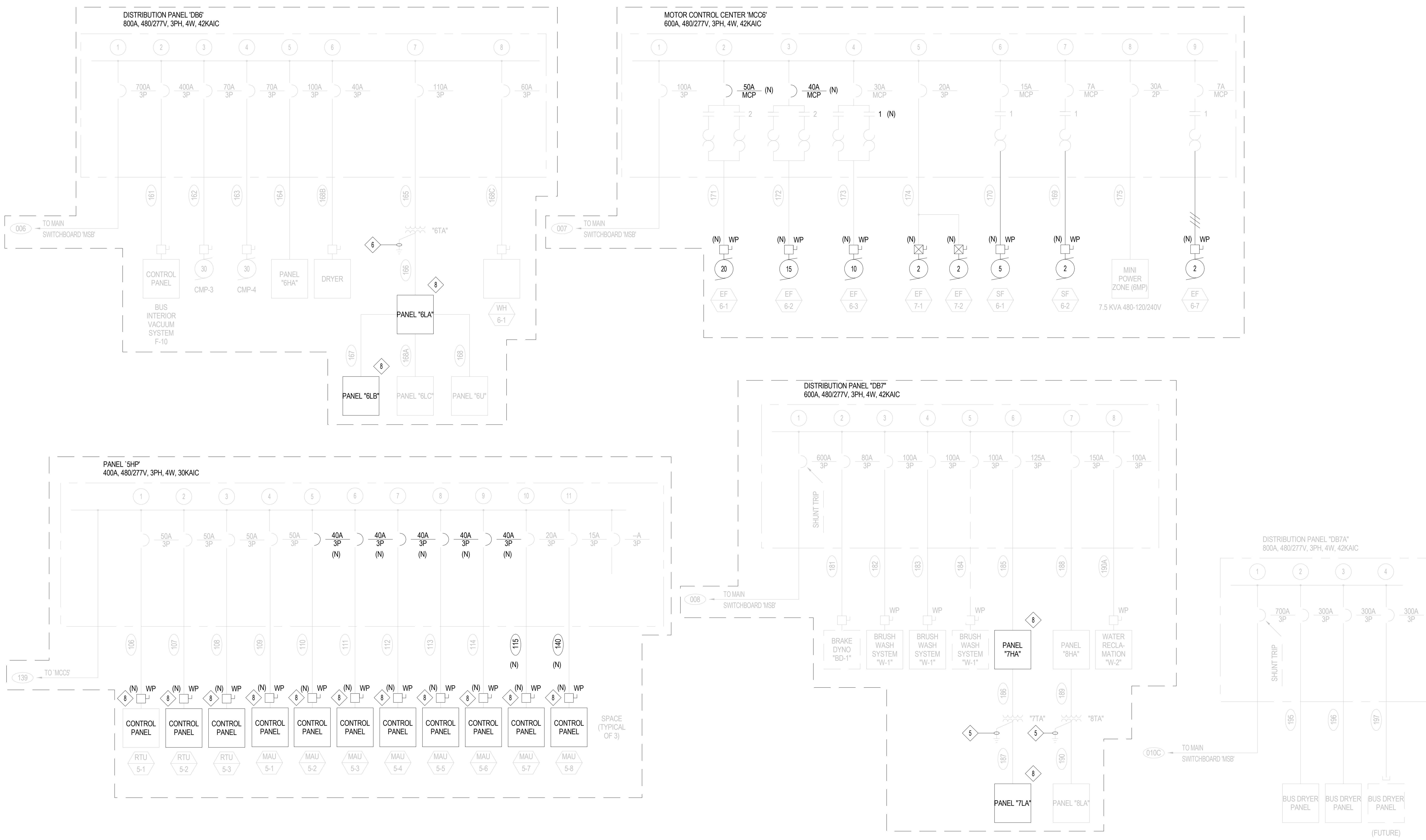

GENERAL NOTES:

1. ALL ELECTRICAL EQUIPMENT IS EXISTING TO REMAIN UNLESS OTHERWISE NOTED.

KEY NOTES:

4. EXISTING 1/2"C-1#8 BC.
5. EXISTING 1/2"C-1#6 BC.
6. EXISTING 1/2"C-1#2 BC.
7. EXISTING 3/4"C-1#1/0 BC.
8. EXISTING ELECTRICAL POWER AND CONTROL PANELS TO BE USED FOR REPLACED MECHANICAL UNITS.

DISTRIBUTION PANEL DB6

LOAD NAME	VOLTS	PH	CONNECTED HP	CONNECTED KVA	AMPS	REMARKS
F-10	480	3		253		
CMP-3	480	3	30	33		
CMP-4	480	3	30	33		
PANEL 6HA	480	3		53		
XFMR 6TA (PANEL 6LA)	480	3		68		
DRYER	480	3		21		
WH 6-1	480	3		36		
TOTAL	480	3		497	598	

MOTOR CONTROL CENTER MCC6

LOAD NAME	VOLTS	PH	CONNECTED HP	CONNECTED KVA	AMPS	REMARKS
EF 6-1	480	3	20	22.4		
EF 6-2	480	3	15	17.5		
EF 6-3	480	3	10	11.6		
EF 7-1, EF 7-2	480	3	2 x 2	5.6		
SF 6-1	480	3	5	6.3		
SF 6-2	480	3	2	2.8		
MINI POWER ZONE (6MP)	480	1		2.3		
EF 6-7	480	3	3	4.0		
TOTAL	480	3		72.5	87.2	

DISTRIBUTION PANEL DB7

LOAD NAME	VOLTS	PH	CONNECTED HP	CONNECTED KVA	AMPS	REMARKS
BD-1	480	3		45		
W-1	480	3		66		
W-1	480	3		66		
W-1	480	3		66		
PANEL 7HA	480	3		67		
PANEL 8HA	480	3		90		
W-2	480	3		36		
TOTAL	480	3		435	523	

DISTRIBUTION PANEL DB7A

LOAD NAME	VOLTS	PH	CONNECTED HP	CONNECTED KVA	AMPS	REMARKS
BUS DRYER PANEL	480	3	(9) 15	157		
BUS DRYER PANEL	480	3	(9) 15	157		
BUS DRYER PANEL	480	3	(9) 15	157		
TOTAL	480	3		471	567	

DISTRIBUTION PANEL DB5B

LOAD NAME	VOLTS	PH	CONNECTED HP	CONNECTED KVA	AMPS	REMARKS
PANEL 5LP	208	3		27		
PANEL 5LQ	208	3		36		
PANEL 5LR	208	3		19		
TOTAL	208	3		82	226	

MOTOR CONTROL CENTER MCC5A

LOAD NAME	VOLTS	PH	CONNECTED HP	CONNECTED KVA	AMPS	REMARKS
EF 5-1	480	3	25	28.3		
EF 5-2	480	3	15	17.5		
EF 5-3	480	3	15	17.5		
EF 5-4	480	3	15	17.5		
EF 5-5	480	3	15	17.5		
EF 5-6	480	3	5	6.3		
EF 5-25	480	3	7 1/2	9.1		
EF 5-28	480	3	20	22.4		
EF 5-37	480	3	7 1/2	9.1		
XFMR 5TM (PANEL 5LT)	480	1		18		
TOTAL	480	3		163.2	196.4	

DISTRIBUTION BOARD DB5A

LOAD NAME	VOLTS	PH	CONNECTED HP	CONNECTED KVA	AMPS	REMARKS
RB-11	480	3		150		
EL-9	480	3		43		
COMP. #1	480	3	50	54		
COMP. #2	480	3	50	54		
XFMR 5TD (PANEL 5LF)	480	3		45		
PANEL 5HE	480	3		73		
PANEL 5HF	480	3		79		
PANEL 5HG	480	3		115		
PANEL 5HH	480	3		45		
PANEL 5HJ	480	3		156		
PANEL 5HK	480	3		89		
PANEL 5HL	480	3		133		
PANEL 5WA	480	3		42		
PANEL 5WB	480	3		28		
TOTAL	480	3		1106	1330	

MOTOR CONTROL CENTER MCC5

LOAD NAME	VOLTS	PH	CONNECTED HP	CONNECTED KVA	AMPS	REMARKS
XFMR 5TL (DB5B)	480	3		82		
PANEL 5HM	480	3		8.4		
PANEL 5HN	480	3		48		238.9 287
PANEL 5HP	480	3		187		
ELEVATOR	480	3	30	33		
SF 5-1	480	3	3	4		
SF 5-2	480	3	3	4		
SF 5-3	480	3	3	4		
SF 5-4	480	3	5	6.3		
SF 5-5	480	3	1 1/2	2.5		
SF 5-6	480	3	1	1.7		
SF 5-7	480	3	1 1/2	2.5		
SF 5-8	480	3	3/4	1.3		
SF 5-9	480	3	2	2.8		
SF 5-10	480	3	1	1.7		
SF 5-14	480	3	1-1/2	2.5		
SF 5-15	480	3	1/2	0.9		
SF 5-16	480	3	1/2	0.9		
EF 5-7	480	3	2	2.8		
EF 5-8	480	3	2	2.8		
EF 5-9	480	3	2	2.8		
EF 5-10	480	3	2	2.8		
EF 5-16	480	3	2	2.8		
EF 5-17	480	3	2	2.8		
EF 5-18	480	3	2	2.8		
EF 5-19	480	3	1 1/2	2.5		
EF 5-20	480	3	1	1.7		
EF 5-21	480	3	1	1.7		
EF 5-22	480	3	1	1.7		
EF 5-24	480	3	3/4	1.3		
EF 5-29	480	3	1/2	0.9		
EF 5-36	480	3	3/4	1.3		
TOTAL	480	3		473.6	570	

PANEL 5HP

LOAD NAME	VOLTS	PH	CONNECTED HP	CONNECTED KVA	AMPS	REMARKS
RTU 5-1	480	3		40.7		
RTU 5-2	480	3		34		
RTU 5-3	480	3		34		
MAU 5-1	480	3	20	23.3		
MAU 5-2	480	3	15	18.4		
MAU 5-3	480	3	15	18.4		
MAU 5-4	480	3	15	18.4		
MAU 5-5	480	3	15	18.4		
MAU 5-6	480	3	15	18.4		
MAU 5-7	480	3	7 1/2	10		
MAU 5-8	480	3	3	4.9		
TOTAL	480	3		238.9	287	

MAIN SWITCHBOARD MSB LOAD SUMMARY / GENERATOR LOAD SUMMARY

LOAD NAME	VOLTS	PH	HP	NORMAL CONNECTED KVA	NORMAL CONNECTED AMPS	NORMAL DEMAND	GENERATOR DEMAND
DB4	480	3		242			
DB5	480	3		2142			
DB6	480	3		497			
MCC6	480	3		72.5			
DB7	480	3		435			
LNG SYSTEM	480	3		582			
PANEL 1H	480	3		16			
DB7A	480	3		471			
TOTAL	480	3		4457	5364	(0.7) x 5364 = 3755 AMPS	2216KVA - 435KVA (DB7) - 471KVA (DB7A) = 1310KVA

NOTE:
1. 1500KW GENERATOR = 1666KVA
2. THE GENERATOR ESTIMATED DEMAND LOAD IS 50% OF THE NORMAL CONNECTED LOAD (4433KVA x 0.5 = 2216KVA).
3. BUS WASH/BRAKE DYNO BUILDING WILL DE-ENERGIZED WHEN THE GENERATOR STARTS.

DISTRIBUTION PANEL DB4

LOAD NAME	VOLTS	PH	CONNECTED HP	CONNECTED KVA	AMPS	REMARKS
PANEL 4HA	480	3		52		
PANEL 4HB	480	3		9.4		
RTU 4-1	480	3		34		
RTU 4-2	480	3		15		
RTU 4-3	480	3		24		
RTU 4-4	480	3		21		
XFMR 4TA (PANEL 4LA)	480	3		87		
TOTAL	480	3		242	291	

DISTRIBUTION PANEL DB5

LOAD NAME	VOLTS	PH	CONNECTED HP	CONNECTED KVA	AMPS	REMARKS
MCC5	480	3		421.7		
MCC5A	480	3		163.2		
DB5A	480	3		1106		
PANEL 5H	480	3		23		
PANEL 5HA	480	3		99.4		
PANEL 5HB	480	3		88		
PANEL 5HC	480	3		88		
PANEL 5HD	480	3		83		
XFMR 5TB (PANEL 5LC)	480	3		70		
TOTAL	480	3		2142	2576	

REGISTERED PROFESSIONAL ENGINEER PAUL K. ERICSON No. 11219 exp.06/30/2025 ELECTRICAL STATE OF CALIFORNIA

05-13-2024

Stantec
801 S. Figueroa Street, Suite 300
Los Angeles, CA 90017

Copyright Reserved
The Contractor shall verify and be responsible for all dimensions. DO NOT scale the drawing - any errors or omissions shall be reported to Stantec without delay.
The Copyrights to all designs and drawings are the property of Stantec. Reproduction or use for any purpose other than that authorized by Stantec is forbidden.

REVISION	DESCRIPTION	DATE
4	100% RESUBMITTAL	05/13/2024
3	100% CONSTRUCTION DRAWING SUBMITTAL	03/27/2024
2	90% UPDATED CONSTRUCTION SUBMITTAL	02/13/2024
1	90% CONSTRUCTION DRAWING SUBMITTAL	12/07/2023

REPLACEMENT OF MECHANICAL UNITS AT SANTA ANA BUS BASE

4301 W. MAC ARTHUR BLVD., SANTA ANA, CA

ELECTRICAL SINGLE LINE DIAGRAM

JOB #:	
DESIGN BY:	IZ
DRAWN BY:	AD
CHECKED BY:	PKE
DATE:	02/13/2024
SCALE:	NTS
SHEET:	E-601P

OCTA
ORANGE COUNTY TRANSPORTATION AUTHORITY
550 SOUTH MAIN STREET, ORANGE, CA

Stantec — Panel

Name: **4LC** | Volts: 208Y/120V | Mains Type: MLO | Type:
Location: | Phases: 3 | Mains Rating: 225 A | AIC Rating: 10K
Supply From: 4LA | Wires: 4 | Max Rating: 225 A | Mounting: Surface
Serves: | Lugs: Single Lugs | Enclosure: Type 1
Notes:

CKT	Circuit Description	Trip	Poles	CB	A		B		C		CB	Poles	Trip	Circuit Description	CKT	
1	Spare	20 A	1	--	180	**348**					--	**1**	20 A	**EF 4-1**	2	1
3	MTCC-4	20 A	1	--			100	**420**			--	**1**	20 A	**EF 4-2**	4	1
5	PAC-1	20 A	1	--					180	**420**	--	**1**	20 A	**EF 4-3**	6	1
7	LAV/UR CONTROLS	20 A	1	--	1200	**180**					--	**1**	20 A	**EF 4-4**	8	1
9	ANNUNCIATOR-4	20 A	1	--			180	50			--	1	20 A	EF TIME CLOCK	10	
11	MASTER DOOR CTRL PNL	20 A	1	--					500	360	--	1	20 A	ROOF RECEPTACLES	12	
13	MASTER INTERCOM CTRL PNL	20 A	1	--	500	100					--	1	20 A	IRRIGATION CONTROLLER - A	14	
15	SPACE	20 A	1	--			450	100			--	1	20 A	IRRIGATION CONTROLLER - B	16	
17	RECEPTACLES PBX	20 A	1	--					360	1840	--	1	40 A	BUS ENTRANCE GATE	18	
19	RECEPTACLES PBX	20 A	1	--	360	1840					--	1	40 A	BUS ENTRANCE GATE	20	
21	RECEPTACLES OC-12	20 A	1	--			360	1840			--	1	40 A	EMPLOYEE ENTRANCE GATE	22	
23	RECEPTACLES OC-12	20 A	1	--					360	600	--	1	20 A	BUS STOP SHELTER	24	
25	RECEPTACLES OC-12	30 A	1	--	500	3120					--	2	40 A	LOT MONITORING SHACK	26	
27	RECEPTACLE	20 A	1	--			180	3120			--	--	--	--	28	
29	HOOD	20 A	1	--					600	**1737**	--	2	**25 A**	**AC 4-1**	30	1
31	Spare	20 A	1	--	0	**1737**					--	--	--	--	32	
33	ELECTRIC RANGE	60 A	2	--			4350	**1737**			--	2	**25 A**	**AC 4-2**	34	1
35	--	--	--	--					4350	**1737**	--	--	--	--	36	
37	IRRIGATION CONTROLLER - C	20 A	1	--	0	**696**					--	1	20 A	**SF 4-1**	38	1
39	Space	--	1	--			--	100			--	1	20 A	DAMPERS	40	
41	Space	--	1	--					--	--	--	1	--	Space	42	
				Total Load:	**10.76 kVA**		**12.99 kVA**		**13.04 kVA**							
				Total Amps:	**90 A**		**111 A**		**112 A**							

Load Classification	Connected Load	Demand Factor	Estimated Demand	Panel Totals	
Spare	36792 VA	100.00%	36792 VA		
				Total Conn. Load:	**36792 VA**
				Total Est. Demand:	**36792 VA**
				Total Conn.:	**102 A**
				Total Est. Demand:	**102 A**
				Existing Total Conn. Load:	**34710 VA**
				Existing Total Conn:	**96 A**

CB Legend (blank = circuit breaker):
G = GFCI S = Shunt Trip D = Switching Duty A = AFCI H = HID Rated C = HACR Rated † = Existing Circuit ‡ = Revised Circuit
Notes:

Stantec — Panel

Name: **5HA** | Volts: 480Y/277V | Mains Type: MLO | Type:
Location: ELECTRICAL RM 184 | Phases: 3 | Mains Rating: 225 A | AIC Rating: 22K
Supply From: DB5 | Wires: 4 | Max Rating: 225 A | Mounting: Surface
Serves: | Lugs: Single Lugs | Enclosure: Type 1
Notes:

CKT	Circuit Description	Trip	Poles	CB	A		B		C		CB	Poles	Trip	Circuit Description	CKT	
1	SITE LIGHTING	20 A	1	--	2880	1600					--	1	20 A	WALL LIGHTING	2	
3	SITE LIGHTING	20 A	1	--			2880	1200			--	1	20 A	WALL LIGHTING	4	
5	SITE LIGHTING	20 A	1	--					2880	1200	--	1	20 A	WALL LIGHTING	6	
7	STEAM CLEAN LTG	20 A	1	--	2228	7167					--	3	60 A	SC-1 PARALLELOGRAM LIFT	8	
9	STEAM CLEAN LTG	20 A	1	--			2228	7167			--	--	--	--	10	
11	BAY LTG	20 A	1	--					1988	7167	--	--	--	--	12	
13	BAY LTG	20 A	1	--	1966	336					--	1	20 A	CANOPY LTG	14	
15	BAY LTG	20 A	1	--			2156	420			--	1	20 A	CANOPY LTG	16	
17	BAY LTG	20 A	1	--					2156	588	--	1	20 A	CANOPY LTG	18	
19	BAY LTG	20 A	1	--	1398	504					--	1	20 A	CANOPY LTG	20	
21	BAY LTG	20 A	1	--			1398	5600			--	3	30 A	SC-3 HOT PRESS. WASHER	22	
23	STEAM CLEAN LTG	20 A	1	--					1632	5600	--	--	--	--	24	
25	STEAM CLEAN LTG	20 A	1	--	1632	5600					--	--	--	--	26	
27	Space	--	1	--			--	**1496**			--	**3**	20 A	**SF 5-12, 5-13 & EF 5-34**	28	1
29	Space	--	1	--					--	**1496**	--	**--**	**--**	**--**	30	
31	Space	--	1	--	--	**1496**					--	**--**	**--**	**--**	32	
33	Space	--	1	--			--	--			--	1	--	Space	34	
35	Space	--	1	--					--	--	--	1	--	Space	36	
37	Space	--	1	--	--	8335					--	3	70 A	PANEL 5LA (VIA XFMR 5TA)	38	
39	Space	--	1	--			--	8530			--	--	--	--	40	
41	Space	--	1	--					--	6485	--	--	--	--	42	
				Total Load:	**35.14 kVA**		**33.08 kVA**		**31.19 kVA**							
				Total Amps:	**128 A**		**120 A**		**113 A**							

Load Classification	Connected Load	Demand Factor	Estimated Demand	Panel Totals	
Spare	99409 VA	100.00%	99409 VA		
				Total Conn. Load:	**99409 VA**
				Total Est. Demand:	**99409 VA**
				Total Conn.:	**120 A**
				Total Est. Demand:	**120 A**
				Existing Total Conn. Load:	**98911 VA**
				Existing Total Conn:	**119 A**

CB Legend (blank = circuit breaker):
G = GFCI S = Shunt Trip D = Switching Duty A = AFCI H = HID Rated C = HACR Rated † = Existing Circuit ‡ = Revised Circuit
Notes:

Stantec — Panel

Name: **5HE** | Volts: 480Y/277V | Mains Type: MLO | Type:
Location: ELECTRICAL RM 137 | Phases: 3 | Mains Rating: 225 A | AIC Rating: 30K
Supply From: DB5A | Wires: 4 | Max Rating: 225 A | Mounting: Surface
Serves: | Lugs: Single Lugs | Enclosure: Type 1
Notes:

CKT	Circuit Description	Trip	Poles	CB	A		B		C		CB	Poles	Trip	Circuit Description	CKT	
1	SITE LTG	20 A	1	--	960	1200					--	1	20 A	WALL LTG	2	
3	SITE LTG	20 A	1	--			960	1600			--	1	20 A	WALL LTG	4	
5	SITE LTG	20 A	1	--					960	1284	--	1	20 A	WALL LTG	6	
7	PARTS ROOM LTG	20 A	1	--	2062	480					--	3	20 A	PS-1 STAK SYSTEM	8	
9	PARTS ROOM LTG	20 A	1	--			2002	480			--	--	--	--	10	
11	PARTS ROOM LTG	20 A	1	--					2760	480	--	--	--	--	12	
13	PARTS ROOM LTG	20 A	1	--	2760	4633					--	3	30 A	PS-10 FORKLIFT	14	
15	PARTS ROOM LTG	20 A	1	--			2645	4633			--	--	--	--	16	
17	PARTS ROOM LTG	20 A	1	--					2760	4633	--	--	--	--	18	
19	PARTS ROOM LTG	20 A	1	--	2243	**1884**					--	3	20 A	**EF 5-31, 5-33, & SF 5-11**	20	1
21	PARTS ROOM LTG	20 A	1	--			2090	**1884**			--	--	--	--	22	
23	PARTS ROOM LTG	20 A	1	--					2645	**1884**	--	--	--	--	24	
25	PARTS ROOM LTG	20 A	1	--	2530	0					--	1	20 A	Spare	26	
27	PARTS ROOM LTG	20 A	1	--			2415	0			--	1	20 A	Spare	28	
29	PARTS ROOM LTG	20 A	1	--					2530	0	--	1	20 A	Spare	30	
31	TEL, ELECT, LUBE, C.A. LTG	20 A	1	--	539	0					--	1	20 A	Spare	32	
33	TEL, ELECT, LUBE, C.A. LTG	20 A	1	--			385	0			--	1	20 A	Spare	34	
35	Spare	20 A	1	--					0	0	--	1	20 A	Spare	36	
37	Spare	20 A	1	--	0	6330					--	3	50 A	PANEL 5LH (VIA XFMR 5TE)	38	
39	Spare	20 A	1	--			0	3680			--	--	--	--	40	
41	Spare	20 A	1	--					0	4155	--	--	--	--	42	
				Total Load:	**25.62 kVA**		**22.77 kVA**		**24.09 kVA**							
				Total Amps:	**93 A**		**82 A**		**88 A**							

Load Classification	Connected Load	Demand Factor	Estimated Demand	Panel Totals	
Spare	72486 VA	100.00%	72486 VA		
				Total Conn. Load:	**72486 VA**
				Total Est. Demand:	**72486 VA**
				Total Conn.:	**87 A**
				Total Est. Demand:	**87 A**
				Existing Total Conn. Load:	**73134 VA**
				Existing Total Conn:	**88 A**

CB Legend (blank = circuit breaker):
G = GFCI S = Shunt Trip D = Switching Duty A = AFCI H = HID Rated C = HACR Rated † = Existing Circuit ‡ = Revised Circuit
Notes:

Stantec — Panel

Name: **5HJ** | Volts: 480Y/277V | Mains Type: MLO | Type:
Location: BODY 174 | Phases: 3 | Mains Rating: 400 A | AIC Rating: 22K
Supply From: DB5A | Wires: 4 | Max Rating: 400 A | Mounting: Surface
Serves: | Lugs: Single Lugs | Enclosure: Type 1
Notes:

CKT	Circuit Description	Trip	Poles	CB	A		B		C		CB	Poles	Trip	Circuit Description	CKT
1	BP-1 IN-GROUND LIFT	30 A	3	--	3733	5600					--	3	50 A	V-1 COLLECTION VACUUM	2
3	--	--	--	--			3733	5600			--	--	--	--	4
5	--	--	--	--					3733	5600	--	--	--	--	6
7	BP-2 IN-GROUND LIFT	30 A	3	--	3733	504					--	1	20 A	CANOPY LTG	8
9	--	--	--	--			3733	420			--	1	20 A	CANOPY LTG	10
11	--	--	--	--					3733	0	--	1	20 A	SMOKER CANOPY LTG	12
13	BP-1 IN-GROUND LIFT	30 A	3	--	3733	0					--	1	20 A	Spare	14
15	--	--	--	--			3733	2134			--	1	20 A	BODY LTG	16
17	--	--	--	--					3733	2146	--	1	20 A	BODY LTG	18
19	BP-7 PAINT BOOTH	100 A	3	--	17800	0					--	1	20 A	LCP5D CONTROL	20
21	--	--	--	--			17800	1476			--	1	20 A	BODY LTG	22
23	--	--	--	--					17800	1834	--	1	20 A	BODY LTG	24
25	SM-1 SHEAR	20 A	3	--	2933	948					--	1	20 A	PAINT BOTH LTG	26
27	--	--	--	--			2933	711			--	1	20 A	VAC, STOR, PAINT MIX LTG	28
29	--	--	--	--					2933	1600	--	1	20 A	WALL LTG	30
31	SM-6 VERTICAL BAND SAW	20 A	3	--	1267	1600					--	1	20 A	WALL LTG	32
33	--	--	--	--			1267	1200			--	1	20 A	WALL LTG	34
35	--	--	--	--					1267	0	--	1	20 A	Spare	36
37	SM-20 OVERHEAD CRANE	20 A	3	--	1493	7540					--	3	70 A	PANEL 5LL (VIA XFMR 5TH)	38
39	--	--	--	--			1493	6280			--	--	--	--	40
41	--	--	--	--					1493	5990	--	--	--	--	42
				Total Load:	**50.88 kVA**		**52.51 kVA**		**51.86 kVA**						
				Total Amps:	**184 A**		**190 A**		**188 A**						

Load Classification	Connected Load	Demand Factor	Estimated Demand	Panel Totals	
Spare	155259 VA	100.00%	155259 VA		
				Total Conn. Load:	**155259 VA**
				Total Est. Demand:	**155259 VA**
				Total Conn.:	**187 A**
				Total Est. Demand:	**187 A**

CB Legend (blank = circuit breaker):
G = GFCI S = Shunt Trip D = Switching Duty A = AFCI H = HID Rated C = HACR Rated † = Existing Circuit ‡ = Revised Circuit
Notes:

KEY NOTES:

1 EXISTING EQUIPMENT TO BE REPLACED.

REGISTERED PROFESSIONAL ENGINEER PAUL K. ERICSON No. 11219 exp.06/30/2025 ELECTRICAL STATE OF CALIFORNIA

05-13-2024

4LC	5HA
5HE	5HJ

IFB 4-2550 EXHIBIT B

Stantec
801 S. Figueroa Street, Suite 300
Los Angeles, CA 90017

Copyright Reserved
The contractor shall verify and be responsible for all dimensions. DO NOT scale the drawing - any errors or omissions shall be reported to Stantec without delay.
This drawing is the property of Stantec and must not be altered without the consent of Stantec. Reproduction or use for any purpose other than that authorized by Stantec is forbidden.

REVISION	DESCRIPTION	DATE
4	100% RESUBMITTAL	05/13/2024
3	100% CONSTRUCTION DRAWING SUBMITTAL	03/27/2024
2	90% UPDATED CONSTRUCTION SUBMITTAL	02/13/2024
1	90% CONSTRUCTION DRAWING SUBMITTAL	12/07/2023

REPLACEMENT OF MECHANICAL UNITS AT SANTA ANA BUS BASE
4301 W. MAC ARTHUR BLVD., SANTA ANA, CA

PANEL SCHEDULES

JOB #:
DESIGN BY: IZ
DRAWN BY: AD
CHECKED BY: PKE
DATE: 02/13/2024
SCALE: NTS
SHEET: **E-700P**

OCTA
ORANGE COUNTY TRANSPORTATION AUTHORITY
550 SOUTH MAIN STREET, ORANGE, CA

Autodesk Docs://2014233703_Santa_Ana_Bus/elec_SantaAnaBus_2014233703.rvt
5/8/2024 9:59:47 AM

IFB 4-2550 EXHIBIT B

Stantec — Panel

Name: **5LD** | Location: RUNNING REPAIR AREA 178 | Supply From: 5LC | Serves:
Volts: 208Y/120V | Phases: 3 | Wires: 4
Mains Type: MLO | Mains Rating: 225 A | Max Rating: 225 A | Lugs: Single Lugs
Type: | AIC Rating: 10K | Mounting: Surface | Enclosure: Type 1

Notes:

CKT	Circuit Description	Trip	Poles	CB	A	A	B	B	C	C	CB	Poles	Trip	Circuit Description	CKT	Key Note
1	Spare	20 A	1	--	0	50					--	1	20 A	SOLENOID	2	
3	Spare	20 A	1	--			0	50			--	1	20 A	SOLENOID	4	
5	RECEPTACLES DROP	20 A	1	--					360	**276**	**--**	1	20 A	**EF 5-39**	6	1
7	B-4 BATTERY CHARGER	20 A	1	--	500	0					--	1	20 A	Spare	8	
9	RECEPTACLES DROP	20 A	1	--			360	360			--	1	20 A	RECEPTACLES DROP	10	
11	RECEPTACLES DROP	20 A	1	--					360	360	--	1	20 A	RECEPTACLES DROP	12	
13	RECEPTACLES DROP	20 A	1	--	360	360					--	1	20 A	RECEPTACLES DROP	14	
15	RECEPTACLES DROP	20 A	1	--			360	360			--	1	20 A	RECEPTACLES DROP	16	
17	PR-27 FLUID MANAGEMENT	20 A	1	--					500	1375	--	2	20 A	PR-14 FILTER CRUSHER	18	
19	PR-25 PARTS WASHER	20 A	1	--	670	1375					--	--	--	--	20	
21	PR-27 FLUID MANAGEMENT	20 A	1	--			500	530			--	1	20 A	DRINKING FOUNTAIN DF 5-2	22	
23	PR-25 PARTS WASHER	20 A	1	--					670	180	--	1	20 A	ROOF RECEPTACLES	24	
25	RECEPTACLE B-4	20 A	1	--	180	1590					--	1	20 A	OVERHEAD SECT. DOOR	26	
27	PR-27 FLUID MANAGEMENT	20 A	1	--			500	1590			--	1	20 A	OVERHEAD SECT. DOOR	28	
29	RECEPTACLES	20 A	1	--					360	1590	--	1	20 A	OVERHEAD SECT. DOOR	30	
31	RECEPTACLES	20 A	1	--	360	1590					--	1	20 A	OVERHEAD SECT. DOOR	32	
33	WASTE OIL ALARM	20 A	1	--			0	1590			--	1	20 A	OVERHEAD SECT. DOOR	34	
35	Spare	20 A	1	--					0	1590	--	1	20 A	OVERHEAD SECT. DOOR	36	
37	Spare	20 A	1	--	0	1590					--	1	20 A	OVERHEAD SECT. DOOR	38	
39	Spare	20 A	1	--			0	0			--	1	20 A	Spare	40	
41	Spare	20 A	1	--					0	0	--	1	20 A	Spare	42	
				Total Load:	**8.63 kVA**		**6.20 kVA**		**7.62 kVA**							
				Total Amps:	**74 A**		**52 A**		**65 A**							

Load Classification	Connected Load	Demand Factor	Estimated Demand	Panel Totals	
Spare	22446 VA	100.00%	22446 VA		
				Total Conn. Load:	**22446 VA**
				Total Est. Demand:	**22446 VA**
				Total Conn.:	**62 A**
				Total Est. Demand:	**62 A**
				Existing Total Conn. Load:	**22670 VA**
				Existing Total Conn:	**63 A**

CB Legend (blank = circuit breaker):
G = GFCI S = Shunt Trip D = Switching Duty A = AFCI H = HID Rated C = HACR Rated † = Existing Circuit ‡ = Revised Circuit

Notes:

Stantec — Panel

Name: **5LG** | Location: REBUILD 106 | Supply From: 5LF | Serves:
Volts: 208Y/120V | Phases: 3 | Wires: 4
Mains Type: MLO | Mains Rating: 225 A | Max Rating: 225 A | Lugs: Single Lugs
Type: | AIC Rating: 10K | Mounting: Surface | Enclosure: Type 1

Notes:

CKT	Circuit Description	Trip	Poles	CB	A	A	B	B	C	C	CB	Poles	Trip	Circuit Description	CKT	Key Note
1	RECEPTACLES	20 A	1	--	180	670					--	1	20 A	RB-25 JIB CRANE	2	
3	RECEPTACLES	20 A	1	--			180	670			--	1	20 A	RB-25 JIB CRANE	4	
5	RECEPTACLES	20 A	1	--					180	670	--	1	20 A	RB-25 JIB CRANE	6	
7	RECEPTACLES	20 A	1	--	540	670					--	1	20 A	RB-25 JIB CRANE	8	
9	RECEPTACLES	20 A	1	--			540	1000			--	1	20 A	EL-2 BUFFER/GRINDER	10	
11	RECEPTACLES	20 A	1	--					360	180	--	1	20 A	EL-12 WORKBENCH	12	
13	RB-1 WORKBENCH	20 A	1	--	360	360					--	1	20 A	RECEPTACLES	14	
15	RB-1 WORKBENCH	20 A	1	--			180	360			--	1	20 A	RECEPTACLES	16	
17	RB-1 WORKBENCH	20 A	1	--					180	180	--	1	20 A	RECEPTACLES	18	
19	RB-1 WORKBENCH	20 A	1	--	180	180					--	1	20 A	EL-1 WORKBENCH W/VISE	20	
21	RB-1 WORKBENCH	20 A	1	--			180	**2143**			**--**	2	**30 A**	**HP 5-1**	22	1
23	REC. OFFICE	20 A	1	--					180	**2143**	**--**	**--**	**--**	**--**	24	
25	REC. OFFICE	20 A	1	--	180	510					--	1	20 A	UH 5-5	26	
27	RB-8 BUFFER/GRINDER	20 A	1	--			1000	510			--	1	20 A	UH 5-9	28	
29	RB-21 DRILL PRESS	20 A	1	--					1590	0	--	1	20 A	Spare	30	
31	RB-3 TRANSM. DRAIN TABLE	20 A	1	--	540	0					--	1	20 A	Spare	32	
33	RB-3 TRANSM. DRAIN TABLE	20 A	1	--			540	0			--	1	20 A	Spare	34	
35	RB-3 TRANSM. DRAIN TABLE	20 A	1	--					360	0	--	1	20 A	Spare	36	
37	RB-7 PARTS WASHER	20 A	1	--	180	0					--	1	20 A	Spare	38	
39	Spare	20 A	1	--			0	0			--	1	20 A	Spare	40	
41	Spare	20 A	1	--					0	0	--	1	20 A	Spare	42	
				Total Load:	**4.55 kVA**		**7.30 kVA**		**6.02 kVA**							
				Total Amps:	**38 A**		**63 A**		**52 A**							

Load Classification	Connected Load	Demand Factor	Estimated Demand	Panel Totals	
Spare	17876 VA	100.00%	17876 VA		
				Total Conn. Load:	**17876 VA**
				Total Est. Demand:	**17876 VA**
				Total Conn.:	**50 A**
				Total Est. Demand:	**50 A**
				Existing Total Conn. Load:	**16630 VA**
				Existing Total Conn:	**46 A**

CB Legend (blank = circuit breaker):
G = GFCI S = Shunt Trip D = Switching Duty A = AFCI H = HID Rated C = HACR Rated † = Existing Circuit ‡ = Revised Circuit

Notes:

Stantec — Panel

Name: **5LH** | Location: ELECTRICAL RM 137 | Supply From: 5HE | Serves:
Volts: 208Y/120V | Phases: 3 | Wires: 4
Mains Type: MCB | Mains Rating: 225 A | MCB Rating: 100 A | Lugs: Single Lugs
Type: | AIC Rating: 10K | Mounting: Surface | Enclosure: Type 1

Notes:

CKT	Circuit Description	Trip	Poles	CB	A	A	B	B	C	C	CB	Poles	Trip	Circuit Description	CKT	Key Note
1	RECEPTACLES	20 A	1	--	540	1040					--	2	20 A	AIR DRYER	2	
3	RECEPTACLES	20 A	1	--			540	1040			--	--	--	--	4	
5	RECEPTACLES	20 A	1	--					540	1040	--	2	20 A	AIR DRYER	6	
7	RECEPTACLES	20 A	1	--	360	1040					--	--	--	--	8	
9	RECEPTACLES	20 A	1	--			180	300			--	1	20 A	PANEL LCP5A	10	
11	RECEPTACLES	20 A	1	--					180	385	--	1	20 A	UH 5-1	12	
13	RECEPTACLES	20 A	1	--	720	1590					--	1	20 A	OVERHEAD SECT. DOOR	14	
15	RECEPTACLES	20 A	1	--			720	100			--	1	20 A	AUT. DRAIN VALVES	16	
17	RECEPTACLES	20 A	1	--					540	800	--	1	20 A	FIRE BELL	18	
19	F.A.C.P	20 A	1	--	0	800					--	1	20 A	F/A PNL	20	
21	Spare	20 A	1	--			0	800			--	1	20 A	MTC	22	
23	L.N.G. PANEL	20 A	1	--					0	670	--	1	20 A	EF 5-30 (1/4)	24	
25	L.N.G. U.P.S	20 A	1	--	0	**180**					**--**	1	20 A	**EF 5-32 (1/10)**	26	1
27	Space	--	1	--			--	0			--	1	20 A	Spare	28	
29	Space	--	1	--					--	0	--	1	20 A	Spare	30	
31	Space	--	1	--	--	--					--	1	--	Space	32	
33	Space	--	1	--			--	--			--	1	--	Space	34	
35	Space	--	1	--					--	--	--	1	--	Space	36	
37	Space	--	1	--	--	--					--	1	--	Space	38	
39	Space	--	1	--			--	--			--	1	--	Space	40	
41	Space	--	1	--					--	--	--	1	--	Space	42	
				Total Load:	**6.27 kVA**		**3.68 kVA**		**4.16 kVA**							
				Total Amps:	**53 A**		**31 A**		**35 A**							

Load Classification	Connected Load	Demand Factor	Estimated Demand	Panel Totals	
Spare	14105 VA	100.00%	14105 VA		
				Total Conn. Load:	**14105 VA**
				Total Est. Demand:	**14105 VA**
				Total Conn.:	**39 A**
				Total Est. Demand:	**39 A**
				Existing Total Conn. Load:	**14165 VA**
				Existing Total Conn:	**39 A**

CB Legend (blank = circuit breaker):
G = GFCI S = Shunt Trip D = Switching Duty A = AFCI H = HID Rated C = HACR Rated † = Existing Circuit ‡ = Revised Circuit

Notes:

Stantec — Panel

Name: **5LJ** | Location: BUILDING MAINTENANCE 150 | Supply From: 5HG | Serves:
Volts: 208Y/120V | Phases: 3 | Wires: 4
Mains Type: MCB | Mains Rating: 225 A | MCB Rating: 150 A | Lugs: Single Lugs
Type: | AIC Rating: 10K | Mounting: Surface | Enclosure: Type 1

Notes:

CKT	Circuit Description	Trip	Poles	CB	A	A	B	B	C	C	CB	Poles	Trip	Circuit Description	CKT	Key Note
1	BM-1 WORKBENCH W/VISE	20 A	1	--	180	180					--	1	20 A	M-1 WORKBENCH W/VISE	2	
3	BM-1 WORKBENCH W/VISE	20 A	1	--			180	180			--	1	20 A	M-1 WORKBENCH W/VISE	4	
5	BM-1 WORKBENCH W/VISE	20 A	1	--					180	1000	--	1	20 A	M-6 BUFFER/GRINDER	6	
7	BM-1 WORKBENCH W/VISE	20 A	1	--	180	1150					--	2	20 A	M-7 HORIZONTAL BAND SAW	8	
9	BM-2 DRILL PRESS	20 A	1	--			1600	1150			--	--	--	--	10	
11	BM-3 VERTICAL BAND SAW	20 A	1	--					180	1130	--	1	20 A	M-8 VERTICAL BAND SAW	12	
13	BM-6 DUST COLLECTOR	40 A	1	--	1840	180					--	1	20 A	PLASMA CUTTER M-13	14	
15	BM-5 BUFFER GRINDER	20 A	1	--			1000	1000			--	1	40 A	M-9 BELT DISC SANDER	16	
17	BM-6 BELT/DISC SANDER	40 A	1	--					4140	720	--	1	20 A	RECEPTACLES	18	
19	BM-18 COMP. MITRE SAW	40 A	1	--	1840	1080					--	1	20 A	RECEPTACLES	20	
21	BM-19 PIPE THREADING	20 A	1	--			1130	1080			--	1	20 A	RECEPTACLES	22	
23	REC. OFFICE #149	20 A	1	--					180	900	--	1	20 A	RECEPTACLES	24	
25	RECEPTACLES	20 A	1	--	360	1590					--	1	20 A	OVERHEAD SECT. DOOR	26	
27	RECEPTACLES	20 A	1	--			360	1590			--	1	20 A	OVERHEAD SECT. DOOR	28	
29	RECEPTACLES	20 A	1	--					360	510	--	1	20 A	UH 5-10	30	
31	RECEPTACLES	20 A	1	--	360	1840					--	1	40 A	M-25 FUME EXTRACTOR	32	
33	RECEPTACLES	20 A	1	--			360	**1737**			**--**	2	**25 A**	**AC 5-1**	34	1
35	RECEPTACLES	20 A	1	--					180	**1737**	**--**	**--**	**--**	**--**	36	
37	RECEPTACLES	20 A	1	--	540	900					--	3	20 A	M-5 DRILL PRESS	38	
39	RECEPTACLES	20 A	1	--			360	900			--	--	--	--	40	
41	RECEPTACLES	20 A	1	--					360	900	--	--	--	--	42	
				Total Load:	**12.22 kVA**		**12.63 kVA**		**12.48 kVA**							
				Total Amps:	**102 A**		**106 A**		**104 A**							

Load Classification	Connected Load	Demand Factor	Estimated Demand	Panel Totals	
Spare	37324 VA	100.00%	37324 VA		
				Total Conn. Load:	**37324 VA**
				Total Est. Demand:	**37324 VA**
				Total Conn.:	**104 A**
				Total Est. Demand:	**104 A**
				Existing Total Conn. Load:	**36970 VA**
				Existing Total Conn:	**103 A**

CB Legend (blank = circuit breaker):
G = GFCI S = Shunt Trip D = Switching Duty A = AFCI H = HID Rated C = HACR Rated † = Existing Circuit ‡ = Revised Circuit

Notes:

KEY NOTES:

1 EXISTING EQUIPMENT TO BE REPLACED.

5LD	5LG
5LH	5LG

REGISTERED PROFESSIONAL ENGINEER — PAUL K. ERICSON — No. 11219 — exp.06/30/2025 — ELECTRICAL — STATE OF CALIFORNIA

05-13-2024

Stantec
801 S. Figueroa Street, Suite 300
Los Angeles, CA 90017

Copyright Reserved
The Contractor shall verify and be responsible for all dimensions. DO NOT scale the drawing - any errors or omissions shall be reported to Stantec without delay.
The Copyrights to all designs and drawings are the property of Stantec. Reproduction or use for any purpose other than that authorized by Stantec is forbidden.

REVISION	DESCRIPTION	DATE
4	100% RESUBMITTAL	05/13/2024
3	100% CONSTRUCTION DRAWING SUBMITTAL	03/27/2024
2	90% UPDATED CONSTRUCTION SUBMITTAL	02/13/2024
1	90% CONSTRUCTION DRAWING SUBMITTAL	12/07/2023

REPLACEMENT OF MECHANICAL UNITS AT SANTA ANA BUS BASE

4301 W. MAC ARTHUR BLVD., SANTA ANA, CA

PANEL SCHEDULES

JOB #:
DESIGN BY: IZ
DRAWN BY: AD
CHECKED BY: PKE
DATE: 02/13/2024
SCALE: NTS
SHEET: **E-701P**

OCTA
ORANGE COUNTY TRANSPORTATION AUTHORITY
550 SOUTH MAIN STREET, ORANGE, CA

IFB 4-2550 EXHIBIT B

Stantec — Panel

Name: **5LK** | Volts: 208Y/120V | Mains Type: MCB | Type:
Location: STORAGE 155 | Phases: 3 | Mains Rating: 225 A | AIC Rating: 10K
Supply From: 5HH (VIA XFMR 5TG) | Wires: 4 | MCB Rating: 150 A | Mounting: Surface
Serves: | Lugs: Single Lugs | Enclosure: Type 1

Notes:

Key Note	CKT	Circuit Description	Trip	Poles	CB	A		B		C		CB	Poles	Trip	Circuit Description	CKT	Key Note
	1	CAMERAS 6, 7, 8 & 9	20 A	1	--	600	180					--	1	20 A	REC. MANAGER OFFICE	2	
1	3	**EF 5-40**	20 A	**1**	**--**			**420**	180			--	1	20 A	REC. OFFICE	4	
	5	RECEPTACLES	20 A	1	--					0	360	--	1	20 A	RECEPTACLES COUNTER	6	
	7	RECEPTACLES	20 A	1	--	540	1000					--	1	20 A	REFRIGERATOR	8	
	9	RECEPTACLES	20 A	1	--			540	1200			--	1	20 A	MICROWAVE	10	
	11	RECEPTACLES	20 A	1	--					540	1200	--	1	20 A	MICROWAVE	12	
	13	RECEPTACLES	20 A	1	--	720	1590					--	1	20 A	GARBAGE DISPOSAL	14	
	15	RECEPTACLES	20 A	1	--			720	1300			--	1	20 A	HOT WATER DISPENSER	16	
	17	RECEPTACLES	20 A	1	--					720	900	--	1	20 A	RECEPTACLES RESTROOMS	18	
	19	RECEPTACLES	20 A	1	--	720	540					--	1	20 A	RECEPTACLES	20	
	21	RECEPTACLES	20 A	1	--			720	360			--	1	20 A	RECEPTACLES	22	
	23	RECEPTACLES	20 A	1	--					720	360	--	1	20 A	RECEPTACLES	24	
	25	SHREDDER	25 A	3	--	1267	540					--	1	20 A	RECEPTACLES	26	
	27	--	--	--	--			1267	540			--	1	20 A	RECEPTACLES	28	
	29	--	--	--	--					1267	540	--	1	20 A	RECEPTACLES	30	
	31	MASTER DOOR CTRL PNL	20 A	1	--	500	1130					--	1	20 A	COILING DOOR	32	
	33	MASTER INTERCOM CTRL PNL	20 A	1	--			500	1130			--	1	20 A	COILING DOOR	34	
	35	Spare	20 A	1	--					0	1200	--	1	20 A	DOCK LEVELER	36	
	37	PANEL 5UC	30 A	2	--	720	1860					--	3	40 A	PANEL 5LS	38	
	39	--	--	--	--			1080	1530			--	--	--	--	40	
	41	Spare	20 A	1	--					0	1920	--	--	--	--	42	
					Total Load:	**11.91 kVA**		**11.49 kVA**		**9.73 kVA**							
					Total Amps:	**101 A**		**98 A**		**81 A**							

Load Classification	Connected Load	Demand Factor	Estimated Demand	Panel Totals	
Spare	33121 VA	100.00%	33121 VA		
				Total Conn. Load:	**33121 VA**
				Total Est. Demand:	**33121 VA**
				Total Conn.:	**92 A**
				Total Est. Demand:	**92 A**
				Existing Total Conn. Load:	**33651 VA**
				Existing Total Conn:	**93 A**

CB Legend (blank = circuit breaker):
G = GFCI S = Shunt Trip D = Switching Duty A = AFCI H = HID Rated C = HACR Rated † = Existing Circuit ‡ = Revised Circuit

Notes:

Stantec — Panel

Name: **5LM** | Volts: 208Y/120V | Mains Type: MCB | Type:
Location: COMPONENT EXCHANGE 148 | Phases: 3 | Mains Rating: 225 A | AIC Rating: 10K
Supply From: 5HK (VIA TFMR 5TJ) | Wires: 4 | MCB Rating: 150 A | Mounting: Surface
Serves: | Lugs: Single Lugs | Enclosure: Type 1

Notes:

Key Note	CKT	Circuit Description	Trip	Poles	CB	A		B		C		CB	Poles	Trip	Circuit Description	CKT
	1	SR-1 BUFFER GRINDER	20 A	1	--	1000	0					--	1	20 A	Spare	2
	3	SR-2 SMALL PARTS CLEANER	20 A	1	--			1130	670			--	1	20 A	SR-9 JIB CRANE	4
	5	SR-7 WORKBENCH W/VISE	20 A	1	--					180	180	--	1	20 A	CE-11 WORKBENCH W/VISE	6
	7	SR-7 WORKBENCH W/VISE	20 A	1	--	180	180					--	1	20 A	CE-11 WORKBENCH W/VISE	8
	9	SR-7 WORKBENCH W/VISE	20 A	1	--			180	180			--	1	20 A	CE-14 FLUID MANAGEMENT	10
	11	SR-8 PARTS WASHER	20 A	1	--					670	0	--	1	20 A	Spare	12
	13	RECEPTACLES	20 A	1	--	540	360					--	1	20 A	RECEPTACLES	14
	15	RECEPTACLES	20 A	1	--			540	360			--	1	20 A	RECEPTACLES	16
	17	RECEPTACLES	20 A	1	--					360	360	--	1	20 A	RECEPTACLES	18
	19	RECEPTACLES	20 A	1	--	540	360					--	1	20 A	RECEPTACLES	20
	21	RECEPTACLES	20 A	1	--			540	360			--	1	20 A	RECEPTACLES	22
	23	RECEPTACLES	20 A	1	--					360	180	--	1	20 A	RECEPTACLES	24
	25	REC. NETWORK RACK	20 A	1	--	360	1200					--	1	20 A	UP-5 SEWING MACHINE STA.	26
	27	REC. NETWORK RACK	20 A	1	--			360	540			--	1	20 A	RECEPTACLES	28
	29	REC. NETWORK RACK	20 A	1	--					360	360	--	1	20 A	RECEPTACLES	30
1	31	**RTU 5-4**	40 A	2	**--**	**2965**	1590					--	1	20 A	OVERHEAD SECT. DOOR	32
	33	--	**--**	**--**	**--**			**2965**	0			--	1	20 A	Spare	34
1	35	**RTU 5-5**	40 A	2	**--**					**2965**	670	--	1	20 A	COILING DOOR	36
	37	--	**--**	**--**	**--**	**2965**	1130					--	1	20 A	COILING DOOR	38
	39	EF 5-23 (1/4)	20 A	1	--			670	300			--	1	20 A	FA REMOTE PWR SUPPLY	40
	41	ROOF RECEPTACLES	20 A	1	--					720	510	--	1	20 A	Spare	42
					Total Load:	**13.37 kVA**		**8.80 kVA**		**7.88 kVA**						
					Total Amps:	**113 A**		**74 A**		**66 A**						

Load Classification	Connected Load	Demand Factor	Estimated Demand	Panel Totals	
Spare	30040 VA	100.00%	30040 VA		
				Total Conn. Load:	**30040 VA**
				Total Est. Demand:	**30040 VA**
				Total Conn.:	**83 A**
				Total Est. Demand:	**83 A**
				Existing Total Conn. Load:	**25680 VA**
				Existing Total Conn:	**71 A**

CB Legend (blank = circuit breaker):
G = GFCI S = Shunt Trip D = Switching Duty A = AFCI H = HID Rated C = HACR Rated † = Existing Circuit ‡ = Revised Circuit

Notes:

Stantec — Panel

Name: **5LN** | Volts: 208Y/120V | Mains Type: MCB | Type:
Location: CLEAN SHOP 141 | Phases: 3 | Mains Rating: 225 A | AIC Rating: 10K
Supply From: 5HL (VIA XFMR 5TK) | Wires: 4 | MCB Rating: 100 A | Mounting: Surface
Serves: | Lugs: Single Lugs | Enclosure: Type 1

Notes:

CKT	Circuit Description	Trip	Poles	CB	A		B		C		CB	Poles	Trip	Circuit Description	CKT	Key Note
1	RECEPTACLES	20 A	1	--	900	300					--	1	20 A	BR-1 BRAKE LATHE (CNC)	2	
3	RECEPTACLES	20 A	1	--			900	300			--	1	20 A	BR-2 BRAKE LATHE (STAR)	4	
5	RECEPTACLES	20 A	1	--					900	300	--	1	20 A	BR-2 BRAKE LATHE (STAR)	6	
7	BR-4 WORKBENCH	20 A	1	--	180	300					--	1	20 A	BR-2 BRAKE LATHE (STAR)	8	
9	BR-4 WORKBENCH	20 A	1	--			180	**420**			**--**	1	20 A	**EF 5-38 (1/4)**	10	1
11	BR-17 JIB CRANE	20 A	1	--					670	510	--	1	20 A	BR-9 DUST COLLECTOR	12	
13	BR-17 JIB CRANE	20 A	1	--	670	1130					--	1	20 A	BR-11 ADJ WORK TABLE	14	
15	BR-8	20 A	1	--			0	1130			--	1	20 A	BR-14 TOOL BIT GRINDER	16	
17	Spare	20 A	1	--					0	1840	--	1	40 A	BR-15 PALLET WRAPPER	18	
19	PC-12 JIB CRANE	20 A	3	--	1800	180					--	1	20 A	BR-16 ELECTRIC LIFT TRUCK	20	
21	--	--	--	--			0	300			--	1	20 A	BR-2 BRAKE LATHE (STAR)	22	
23	--	--	--	--					0	0	--	1	20 A	Spare	24	
25	Space	--	1	--	--	830					--	1	20 A	PC-2 ABRASIVE PARTS WASH	26	
27	Space	--	1	--			--	830			--	1	20 A	PC-2 ABRASIVE PARTS WASH	28	
29	Space	--	1	--					--	0	--	1	20 A	Spare	30	
31	Space	--	1	--	--	1130					--	1	20 A	COILING DOOR	32	
33	Space	--	1	--			--	510			--	1	20 A	UH 5-6	34	
35	Space	--	1	--					--	510	--	1	20 A	UH 5-7	36	
37	Space	--	1	--	--	--					--	1	--	Space	38	
39	Space	--	1	--			--	--			--	1	--	Space	40	
41	Space	--	1	--					--	--	--	1	--	Space	42	
				Total Load:	**7.42 kVA**		**4.57 kVA**		**4.73 kVA**							
				Total Amps:	**62 A**		**38 A**		**40 A**							

Load Classification	Connected Load	Demand Factor	Estimated Demand	Panel Totals	
Spare	16720 VA	100.00%	16720 VA		
				Total Conn. Load:	**16720 VA**
				Total Est. Demand:	**16720 VA**
				Total Conn.:	**46 A**
				Total Est. Demand:	**46 A**
				Existing Total Conn. Load:	**16970 VA**
				Existing Total Conn:	**47 A**

CB Legend (blank = circuit breaker):
G = GFCI S = Shunt Trip D = Switching Duty A = AFCI H = HID Rated C = HACR Rated † = Existing Circuit ‡ = Revised Circuit

Notes:

Stantec — Panel

Name: **5LP** | Volts: 208Y/120V | Mains Type: MLO | Type:
Location: ELECTRICAL RM 202 | Phases: 3 | Mains Rating: 225 A | AIC Rating: 10K
Supply From: DB5B | Wires: 4 | Max Rating: 225 A | Mounting: Surface
Serves: | Lugs: Single Lugs | Enclosure: Type 1

Notes:

CKT	Circuit Description	Trip	Poles	CB	A		B		C		CB	Poles	Trip	Circuit Description	CKT	Key Note
1	REC. REBUILD OFFICE	20 A	1	--	180	180					--	1	20 A	REC. MANAGER OFFICE	2	
3	REC. INTERNS OFFICE	20 A	1	--			360	180			--	1	20 A	REC. ASSIST. OFFICE	4	
5	PROJECTION SCREEN	20 A	1	--					510	1000	--	1	20 A	REFRIGERATOR	6	
7	RECEPTACLES	20 A	1	--	900	1200					--	1	20 A	MICROWAVE	8	
9	RECEPTACLES	20 A	1	--			540	180			--	1	20 A	RECEPTACLE COUNTER	10	
11	RECEPTACLES	20 A	1	--					540	1200	--	1	20 A	GARBAGE DISPOSAL	12	
13	RECEPTACLES	20 A	1	--	720	720					--	1	20 A	RECEPTACLES	14	
15	RECEPTACLES	20 A	1	--			900	720			--	1	20 A	RECEPTACLES	16	
17	RECEPTACLES	20 A	1	--					720	720	--	1	20 A	RECEPTACLES	18	
19	RECEPTACLES	20 A	1	--	720	360					--	1	20 A	RECEPTACLES	20	
21	RECEPTACLES	20 A	1	--			720	540			--	1	20 A	RECEPTACLES	22	
23	RECEPTACLES	20 A	1	--					540	360	--	1	20 A	RECEPTACLES	24	
25	ROOF RECPT.	20 A	1	--	0	900					--	1	20 A	RECEPTACLES RESTROOM	26	
27	Spare	20 A	1	--			0	500			--	1	20 A	DRINKING FOUNTAIN	28	
29	Spare	20 A	1	--					0	1300	--	1	20 A	COPIER	30	
31	PANEL 5LW	50 A	3	--	1080	**156**					**--**	1	20 A	**EF 5-11 (1/15)**	32	1
33	--	--	--	--			900	55			--	1	20 A	EF 5-12 (1/15)	34	
35	--	--	--	--					720	**420**	**--**	1	20 A	**EF 5-13 (1/4)**	36	1
37	PANEL 5U	40 A	2	--	2340	55					--	1	20 A	EF -14 (1/15)	38	
39	--	--	--	--			2160	55			--	1	20 A	EF 5-15 (1/15)	40	
41	HOT WATER DISPENSER	20 A	1	--					1300	20	--	1	20 A	BD-1 BY-PASS DAMPER	42	
				Total Load:	**9.51 kVA**		**7.81 kVA**		**9.35 kVA**							
				Total Amps:	**81 A**		**65 A**		**80 A**							

Load Classification	Connected Load	Demand Factor	Estimated Demand	Panel Totals	
Spare	26671 VA	100.00%	26671 VA		
				Total Conn. Load:	**26671 VA**
				Total Est. Demand:	**26671 VA**
				Total Conn.:	**74 A**
				Total Est. Demand:	**74 A**
				Existing Total Conn. Load:	**26775 VA**
				Existing Total Conn:	**74 A**

CB Legend (blank = circuit breaker):
G = GFCI S = Shunt Trip D = Switching Duty A = AFCI H = HID Rated C = HACR Rated † = Existing Circuit ‡ = Revised Circuit

Notes:

KEY NOTES:

1 EXISTING EQUIPMENT TO BE REPLACED.

5LK	5LM
5LN	5LP

REGISTERED PROFESSIONAL ENGINEER
PAUL K. ERICSON
No. 11219
exp.06/30/2025
ELECTRICAL
STATE OF CALIFORNIA

05-13-2024

Stantec
801 S. Figueroa Street, Suite 300
Los Angeles, CA 90017

Copyright Reserved
The Contractor shall verify and be responsible for all dimensions. DO NOT scale the drawing - any errors or omissions shall be reported to Stantec without delay.
The Copyrights to all designs and drawings are the property of Stantec. Reproduction or use for any purpose other than that authorized by Stantec is forbidden.

REVISION	DESCRIPTION	DATE
4	100% RESUBMITTAL	05/13/2024
3	100% CONSTRUCTION DRAWING SUBMITTAL	03/27/2024
2	90% UPDATED CONSTRUCTION SUBMITTAL	02/13/2024
1	90% CONSTRUCTION DRAWING SUBMITTAL	12/07/2023

REPLACEMENT OF MECHANICAL UNITS AT SANTA ANA BUS BASE
4301 W. MAC ARTHUR BLVD., SANTA ANA, CA

PANEL SCHEDULES

JOB #:
DESIGN BY: IZ
DRAWN BY: AD
CHECKED BY: PKE
DATE: 02/13/2024
SCALE: NTS
SHEET: **E-702P**

OCTA
ORANGE COUNTY
TRANSPORTATION AUTHORITY
550 SOUTH MAIN STREET, ORANGE, CA

Autodesk Docs://2014233703_Santa_Ana_Bus/elec_SantaAnaBus_2014233703.rvt

5/8/2024 9:59:50 AM

IFB 4-2550 EXHIBIT B

Panel 5LA

Stantec — Panel

Name: **5LA**	Volts: 208Y/120V	Mains Type: MLO	Type:
Location:	Phases: 3	Mains Rating: 150 A	AIC Rating: 10K
Supply From:	Wires: 4	Max Rating: 150 A	Mounting: Surface
Serves:		Lugs: Single Lugs	Enclosure: Type 1

Notes:

CKT	Circuit Description	Trip	Poles	CB	A		B		C		CB	Poles	Trip	Circuit Description	CKT	Key Note
1	RECEPTACLES	20 A	1	--	720	300					--	1	20 A	PANEL 'LPCSE'	2	
3	RECEPTACLES	20 A	1	--			720	300			--	1	20 A	CAMERAS 1&2	4	
5	PORTABLE LIGHT REC.	20 A	1	--					80	**768**	--	1	20 A	**EF 5-35**	6	1
7	WS 5-1	20 A	1	--	180	0					--	1	20 A	LIFT CONTROL	8	
9	Spare	20 A	1	--			0	0			--	1	20 A	Spare	10	
11	Spare	20 A	1	--					0	0	--	1	20 A	Spare	12	
13	Space	--	1	--	--	--					--	1	--	Space	14	
15	Space	--	1	--			--	--			--	1	--	Space	16	
17	Space	--	1	--					--	--	--	1	--	Space	18	
19	Space	--	1	--	--	--					--	1	--	Space	20	
21	Space	--	1	--			--	--			--	1	--	Space	22	
23	Space	--	1	--					--	--	--	1	--	Space	24	
25	Space	--	1	--	--	--					--	1	--	Space	26	
27	Space	--	1	--			--	--			--	1	--	Space	28	
29	Space	--	1	--					--	--	--	1	--	Space	30	
31	Space	--	1	--	--	--					--	1	--	Space	32	
33	Space	--	1	--			--	--			--	1	--	Space	34	
35	Space	--	1	--					--	--	--	1	--	Space	36	
37	Space	--	1	--	--	7135					--	3	100 A	PANEL 5LB	38	
39	Space	--	1	--			--	7510			--	--	--	--	40	
41	Space	--	1	--					--	5735	--	--	--	--	42	
				Total Load:	**8.34 kVA**		**8.53 kVA**		**6.58 kVA**							
				Total Amps:	**72 A**		**73 A**		**55 A**							

Load Classification	Connected Load	Demand Factor	Estimated Demand	Panel Totals	
Spare	23448 VA	100.00%	23448 VA		
				Total Conn. Load:	**23448 VA**
				Total Est. Demand:	**23448 VA**
				Total Conn.:	**65 A**
				Total Est. Demand:	**65 A**

CB Legend (blank = circuit breaker):
G = GFCI S = Shunt Trip D = Switching Duty A = AFCI H = HID Rated C = HACR Rated † = Existing Circuit ‡ = Revised Circuit

Notes:

Panel 5LQ

Stantec — Panel

Name: **5LQ**	Volts: 208Y/120V	Mains Type: MLO	Type:
Location: SMALL TOOL RM 130	Phases: 3	Mains Rating: 225 A	AIC Rating: 10K
Supply From: DB5B	Wires: 4	Max Rating: 225 A	Mounting: Surface
Serves:		Lugs: Single Lugs	Enclosure: Type 1

Notes:

Key Note	CKT	Circuit Description	Trip	Poles	CB	A		B		C		CB	Poles	Trip	Circuit Description	CKT
	1	RECEPTACLES	20 A	1	--	900	1000					--	1	20 A	REFRIGERATOR	2
	3	RECEPTACLES	20 A	1	--			900	1000			--	1	20 A	REFRIGERATOR	4
	5	RECEPTACLES	20 A	1	--					900	360	--	1	20 A	RECEPTACLES COUNTER	6
	7	RECEPTACLES	20 A	1	--	540	1590					--	1	20 A	GARBAGE DISPOSAL	8
	9	RECEPTACLES	20 A	1	--			540	1300			--	1	20 A	WATER HEATER	10
	11	RECEPTACLES	20 A	1	--					540	1200	--	1	20 A	MICROWAVE	12
	13	RECEPTACLES	20 A	1	--	720	1200					--	1	20 A	MICROWAVE	14
	15	RECEPTACLES	20 A	1	--			540	1200			--	1	20 A	MICROWAVE	16
	17	RECEPTACLES	20 A	1	--					720	1200	--	1	20 A	VENDING MACHINE	18
	19	RECEPTACLES	20 A	1	--	720	1200					--	1	20 A	VENDING MACHINE	20
	21	RECEPTACLES	20 A	1	--			720	1200			--	1	20 A	VENDING MACHINE	22
	23	RECEPTACLES	20 A	1	--					900	1200	--	1	20 A	VENDING MACHINE	24
	25	REC. WARRANTY OFF.	20 A	1	--	540	1200					--	1	20 A	VENDING MACHINE	26
	27	REC. PARTS (EAST)	20 A	1	--			360	500			--	1	20 A	DRINING FOUNTAIN	28
	29	REC. PARTS OFFICE	20 A	1	--					180	1590	--	1	20 A	RR-20 FREON RECOVERY	30
	31	REC. PARTS (SOUTH)	20 A	1	--	360	360					--	1	20 A	RECEPTACLES	32
	33	UH 5-2	20 A	1	--			385	540			--	1	20 A	RECEPTACLES	34
	35	UH 5-3	20 A	1	--					385	540	--	1	20 A	RECEPTACLES	36
1	37	**AC 5-2**	**25 A**	2	**--**	**1737**	440					--	3	50 A	PANEL 5V	38
	39	**--**	**--**	**--**	**--**			**1737**	1300			--	--	--	--	40
	41	ROOF RECEPTACLES	20 A	1	--					720	720	--	--	--	--	42
					Total Load:	**12.51 kVA**		**12.22 kVA**		**11.16 kVA**						
					Total Amps:	**106 A**		**103 A**		**93 A**						

Load Classification	Connected Load	Demand Factor	Estimated Demand	Panel Totals	
Spare	35884 VA	100.00%	35884 VA		
				Total Conn. Load:	**35884 VA**
				Total Est. Demand:	**35884 VA**
				Total Conn.:	**100 A**
				Total Est. Demand:	**100 A**
				Existing Total Conn. Load:	**33530 VA**
				Existing Total Conn:	**99 A**

CB Legend (blank = circuit breaker):
G = GFCI S = Shunt Trip D = Switching Duty A = AFCI H = HID Rated C = HACR Rated † = Existing Circuit ‡ = Revised Circuit

Notes:

Panel 5LS

Stantec — Panel

Name: **5LS**	Volts: 208Y/120V	Mains Type: MLO	Type:
Location: STORAGE 155	Phases: 3	Mains Rating: 100 A	AIC Rating: 10K
Supply From: 5LK	Wires: 4	Max Rating: 100 A	Mounting: Surface
Serves:		Lugs: Single Lugs	Enclosure: Type 1

Notes:

CKT	Circuit Description	Trip	Poles	CB	A		B		C		CB	Poles	Trip	Circuit Description	CKT	Key Note
1	COIN COUNTER	20 A	1	--	500	**180**					**--**	1	20 A	**EF 5-26 (1/10)**	2	1
3	COIN COUNTER	20 A	1	--			500	30			--	1	20 A	EF 5-27 (1/40)	4	
5	CURRENCY STRAPPER	20 A	1	--					500	**420**	**--**	1	20 A	**EF 5-41 (1/4)**	6	1
7	COMPUTER PRINTER	20 A	1	--	500	180					--	1	20 A	ROOF RECEPTACLE	8	
9	COIN COUNTER	20 A	1	--			500	--			--	1	--	Space	10	
11	COIN COUNTER	20 A	1	--					500	--	--	1	--	Space	12	
13	CURRENCY STRAPPER	20 A	1	--	500	--					--	1	--	Space	14	
15	COIN COUNTER	20 A	1	--			500	--			--	1	--	Space	16	
17	COIN COUNTER	20 A	1	--					500	--	--	1	--	Space	18	
19	Space	--	1	--	--	--					--	1	--	Space	20	
21	Space	--	1	--			--	--			--	1	--	Space	22	
23	Space	--	1	--					--	--	--	1	--	Space	24	
25	Space	--	1	--	--	--					--	1	--	Space	26	
27	Space	--	1	--			--	--			--	1	--	Space	28	
29	Space	--	1	--					--	--	--	1	--	Space	30	
31	Space	--	1	--	--	--					--	1	--	Space	32	
33	Space	--	1	--			--	--			--	1	--	Space	34	
35	Space	--	1	--					--	--	--	1	--	Space	36	
37	Space	--	1	--	--	--					--	1	--	Space	38	
39	Space	--	1	--			--	--			--	1	--	Space	40	
41	Space	--	1	--					--	--	--	1	--	Space	42	
				Total Load:	**1.86 kVA**		**1.53 kVA**		**1.92 kVA**							
				Total Amps:	**16 A**		**13 A**		**16 A**							

Load Classification	Connected Load	Demand Factor	Estimated Demand	Panel Totals	
Spare	5310 VA	100.00%	5310 VA		
				Total Conn. Load:	**5310 VA**
				Total Est. Demand:	**5310 VA**
				Total Conn.:	**15 A**
				Total Est. Demand:	**15 A**
				Existing Total Conn. Load:	**5430 VA**
				Existing Total Conn:	**15 A**

CB Legend (blank = circuit breaker):
G = GFCI S = Shunt Trip D = Switching Duty A = AFCI H = HID Rated C = HACR Rated † = Existing Circuit ‡ = Revised Circuit

Notes:

Panel 5LT

Stantec — Panel

Name: **5LT**	Volts: 240V/120V	Mains Type: MCB	Type:
Location: ELECTRICAL RM 202	Phases: 1	Mains Rating: 225 A	AIC Rating: 10K
Supply From: XFMR 5TM	Wires: 3	MCB Rating: 125 A	Mounting: Surface
Serves:		Lugs: Single Lugs	Enclosure: Type 1

Notes:

Key Note	CKT	Circuit Description	Trip	Poles	CB	A		B		C		CB	Poles	Trip	Circuit Description	CKT
	1	OVERHEAD SECT. DOOR	20 A	1	--	1590	1590					--	1	20 A	OVERHEAD SECT. DOOR	2
	3	OVERHEAD SECT. DOOR	20 A	1	--			1590	1590			--	1	20 A	OVERHEAD SECT. DOOR	4
	5	OVERHEAD SECT. DOOR	20 A	1	--	1590	1590					--	1	20 A	OVERHEAD SECT. DOOR	6
	7	OVERHEAD SECT. DOOR	20 A	1	--			1590	1590			--	1	20 A	OVERHEAD SECT. DOOR	8
	9	OVERHEAD SECT. DOOR	20 A	1	--	1590	1590					--	1	20 A	OVERHEAD SECT. DOOR	10
	11	OVERHEAD SECT. DOOR	20 A	1	--			1590	0			--	1	20 A	HVAC TIME CLOCK	12
1	13	**EF 5-42**	20 A	1	**--**	**696**	0					--	1	20 A	Spare	14
	15	Space	--	1	--			--	--			--	1	--	Space	16
	17	Space	--	1	--	--	--					--	1	--	Space	18
	19	Space	--	1	--			--	--			--	1	--	Space	20
					Total Load:	**10.24 kVA**		**7.95 kVA**		**0.00 kVA**						
					Total Amps:	**85 A**		**66 A**		**0 A**						

Load Classification	Connected Load	Demand Factor	Estimated Demand	Panel Totals	
Spare	18186 VA	100.00%	18186 VA		
				Total Conn. Load:	**18186 VA**
				Total Est. Demand:	**18186 VA**
				Total Conn.:	**76 A**
				Total Est. Demand:	**76 A**
				Existing Total Conn. Load:	**18320 VA**
				Existing Total Conn:	**76 A**

CB Legend (blank = circuit breaker):
G = GFCI S = Shunt Trip D = Switching Duty A = AFCI H = HID Rated C = HACR Rated † = Existing Circuit ‡ = Revised Circuit

Notes:

KEY NOTES:

1 EXISTING EQUIPMENT TO BE REPLACED.

5LA	5LQ
5LS	5LT

REGISTERED PROFESSIONAL ENGINEER
PAUL K. ERICSON
No. 11219
exp.06/30/2025
ELECTRICAL
STATE OF CALIFORNIA

05-13-2024

Stantec
801 S. Figueroa Street, Suite 300
Los Angeles, CA 90017

Copyright Reserved
The Contractor shall verify and be responsible for all dimensions. DO NOT scale the drawing - any errors or omissions shall be reported to Stantec without delay.
The Copyrights to all designs and drawings are the property of Stantec. Reproduction or use for any purpose other than that authorized by Stantec is forbidden.

REVISION	DESCRIPTION	DATE
4	100% RESUBMITTAL	05/13/2024
3	100% CONSTRUCTION DRAWING SUBMITTAL	03/27/2024
2	90% UPDATED CONSTRUCTION SUBMITTAL	02/13/2024
1	90% CONSTRUCTION DRAWING SUBMITTAL	12/07/2023

REPLACEMENT OF MECHANICAL UNITS AT SANTA ANA BUS BASE
4301 W. MAC ARTHUR BLVD., SANTA ANA, CA

PANEL SCHEDULES

JOB #:	
DESIGN BY:	IZ
DRAWN BY:	AD
CHECKED BY:	PKE
DATE:	02/13/2024
SCALE:	NTS
SHEET:	**E-703P**

OCTA
ORANGE COUNTY TRANSPORTATION AUTHORITY
550 SOUTH MAIN STREET, ORANGE, CA

Stantec — Panel

Name: **6LB** | Volts: 208Y/120V | Mains Type: MLO | Type:
Location: | Phases: 3 | Mains Rating: 225 A | AIC Rating: 10
Supply From: | Wires: 4 | Max Rating: 225 A | Mounting: Surface
Serves: | Lugs: Single Lugs | Enclosure: Type 1

Notes:

CKT	Circuit Description	Trip	Poles	CB	A		B		C		CB	Poles	Trip	Circuit Description	CKT
1	**EF 6-4 (1/15)**	20 A	1	--	**156**	**3318**					--	2	**50 A**	**RTU 6-1**	2
3	EF 6-5 (1/60)	20 A	1	--			20	**3318**			--	--	--	--	4
5	**EF 6-6 (1/10)**	20 A	1	--					**180**	**2143**	--	2	40 A	**HP 6-1**	6
7	BC-14 FLUID MANAGEMENT	20 A	1	--	500	**2143**					--	--	--	--	8
9	**EF 6-8 (1/10)**	20 A	1	--			**180**	180			--	1	20 A	FACP-6	10
11	WATER HEATER/CIRC. PUMP	20 A	1	--					600	180	--	1	20 A	CC6	12
13	DRINIIKING FOUNTAIN	20 A	1	--	500	100					--	1	20 A	FUEL DISPENSER/CONT.	14
15	REC. OFFICE	20 A	1	--			360	100			--	1	20 A	FUEL DISPENSER/CONT.	16
17	RECEPTACLES DATA RACK	20 A	1	--					360	100	--	1	20 A	FUEL DISPENSER/CONT.	18
19	RECEPTACLES DATA RACK	20 A	1	--	360	100					--	1	20 A	FUEL DISPENSER/CONT.	20
21	RECEPTACLES DROP	20 A	1	--			360	100			--	1	20 A	FUEL DISPENSER/CONT.	22
23	RECEPTACLES DROP	20 A	1	--					360	1590	--	1	20 A	F-2 GASOLINE DISPENSER	24
25	RECEPTACLES	20 A	1	--	540	533					--	3	20 A	SP-1	26
27	RECEPTACLES	20 A	1	--			360	533			--	--	--	--	28
29	RECEPTACLES ROOF RTU-61	20 A	1	--					360	533	--	--	--	--	30
31	RECEPTACLES RESTROOM	20 A	1	--	360	150					--	1	20 A	AUTO DRAIN VALVES	32
33	RECEPTACLES PUMP ROOM	20 A	1	--			540	800			--	1	30 A	POWER SUPPLY CAMERAS	34
35	RECEPTACLES TELEPHONE	20 A	1	--					360	800	--	1	20 A	POWER SUPPLY CAMERAS	36
37	DRINIIKING FOUNTAIN	20 A	1	--	500	**1389**					--	2	**25 A**	**AC 6-1**	38
39	LAV/UR CONTROLS	20 A	1	--			300	**1389**			--	--	--	--	40
41	PHOTOSENSOR CTRL CAB.	20 A	1	--					100	100	--	1	20 A	FSD RM 116 & 118	42
				Total Load:	**10.65 kVA**		**8.54 kVA**		**7.77 kVA**						
				Total Amps:	**90 A**		**72 A**		**65 A**						

Load Classification	Connected Load	Demand Factor	Estimated Demand	Panel Totals	
Spare	26955 VA	100.00%	26955 VA		
				Total Conn. Load:	**26955 VA**
				Total Est. Demand:	**26955 VA**
				Total Conn.:	**75 A**
				Total Est. Demand:	**75 A**
				Existing Total Conn. Load:	**21984 VA**
				Existing Total Conn:	**61 A**

CB Legend (blank = circuit breaker):
G = GFCI S = Shunt Trip D = Switching Duty A = AFCI H = HID Rated C = HACR Rated † = Existing Circuit ‡ = Revised Circuit

Notes:

Stantec — Panel

Name: **8LA** | Volts: 208Y/120V | Mains Type: MCB | Type:
Location: DETAILING/CLEANING 101 | Phases: 3 | Mains Rating: 225 A | AIC Rating: 10
Supply From: 8HA (VIA XFMR 8TA) | Wires: 4 | MCB Rating: 100 A | Mounting: Surface
Serves: | Lugs: Single Lugs | Enclosure: Type 1

Notes:

CKT	Circuit Description	Trip	Poles	CB	A		B		C		CB	Poles	Trip	Circuit Description	CKT
1	RECEPTACLES	20 A	1	--	720	900					--	3	20 A	CL-11 WASHER	2
3	RECEPTACLES	20 A	1	--			720	900			--	--	--	--	4
5	RECEPTACLES	20 A	1	--					720	900	--	--	--	--	6
7	RECEPTACLES	20 A	1	--	500	900					--	3	20 A	CL-12 DRYER	8
9	RECEPTACLES	20 A	1	--			500	900			--	--	--	--	10
11	RECEPTACLES	20 A	1	--					500	900	--	--	--	--	12
13	RECEPTACLES	20 A	1	--	500	360					--	1	20 A	RECEPTACLES DROP	14
15	CAMERAS 12 & 13	20 A	1	--			300	360			--	1	20 A	RECEPTACLES DROP	16
17	Spare	20 A	1	--					0	360	--	1	20 A	RECEPTACLES DROP	18
19	Spare	20 A	1	--	0	360					--	1	20 A	RECEPTACLES DROP	20
21	Spare	20 A	1	--			0	0			--	1	20 A	Spare	22
23	Spare	20 A	1	--					0	**348**	--	1	20 A	**EF 8-1**	24
25	Spare	20 A	1	--	0	1120					--	1	20 A	VACUUM REEL	26
27	Spare	20 A	1	--			0	1120			--	1	20 A	VACUUM REEL	28
29	Spare	20 A	1	--					0	1120	--	1	20 A	VACUUM REEL	30
31	Spare	20 A	1	--	0	1120					--	1	20 A	VACUUM REEL	32
33	Spare	20 A	1	--			0	300			--	1	20 A	Spare	34
35	Spare	20 A	1	--					0	50	--	1	20 A	WATER HEATER	36
37	Space	--	1	--	--	50					--	1	20 A	DRAIN VALVE	38
39	Space	--	1	--			--	--			--	1	--	Space	40
41	Space	--	1	--					--	--	--	1	--	Space	42
				Total Load:	**6.53 kVA**		**5.10 kVA**		**4.90 kVA**						
				Total Amps:	**55 A**		**43 A**		**41 A**						

Load Classification	Connected Load	Demand Factor	Estimated Demand	Panel Totals	
Spare	16528 VA	100.00%	16528 VA		
				Total Conn. Load:	**16528 VA**
				Total Est. Demand:	**16528 VA**
				Total Conn.:	**46 A**
				Total Est. Demand:	**46 A**
				Existing Total Conn. Load:	**16850 VA**
				Existing Total Conn:	**47 A**

CB Legend (blank = circuit breaker):
G = GFCI S = Shunt Trip D = Switching Duty A = AFCI H = HID Rated C = HACR Rated † = Existing Circuit ‡ = Revised Circuit

Notes:

KEY NOTES:

1 EXISTING EQUIPMENT TO BE REPLACED.

REGISTERED PROFESSIONAL ENGINEER
PAUL K. ERICSSON
No. 11219
exp.06/30/2025
ELECTRICAL
STATE OF CALIFORNIA

05-13-2024

6LB	7LA
8LA	---

Stantec
801 S. Figueroa Street, Suite 300
Los Angeles, CA 90017

Copyright Reserved
The contractor shall verify and be responsible for all dimensions. DO NOT scale the drawing - any errors or omissions shall be reported to Stantec without delay.
This drawing is the property of Stantec and shall not be reproduced or used for other purposes than that authorized by Stantec in writing.

REVISION	DESCRIPTION	DATE
4	100% RESUBMITTAL	05/13/2024
3	100% CONSTRUCTION DRAWING SUBMITTAL	03/27/2024
2	90% UPDATED CONSTRUCTION SUBMITTAL	02/13/2024
1	90% CONSTRUCTION DRAWING SUBMITTAL	12/07/2023

REPLACEMENT OF MECHANICAL UNITS AT SANTA ANA BUS BASE
4301 W. MAC ARTHUR BLVD., SANTA ANA, CA

PANEL SCHEDULES

JOB #:
DESIGN BY: IZ
DRAWN BY: AD
CHECKED BY: PKE
DATE: 02/13/2024
SCALE: NTS
SHEET: **E-704P**

OCTA
ORANGE COUNTY TRANSPORTATION AUTHORITY
550 SOUTH MAIN STREET, ORANGE, CA

Autodesk Docs://2014233703_Santa_Ana_Bus/elec_SantaAnaBus_2014233703.rvt
5/8/2024 9:59:52 AM

EQUIP TAG	DESCRIPTION	LOCATION	SERVICE	MOTOR POWER (OR) HP	ELECTRICAL DATA VOLTS	ø	HZ	FLA(A)	MCA(A)	MOCP(A)	DISCONNECT FRAME(A)	FUSE SIZE (A)	BY	STARTER TYPE	BY	EMERGENCY / NORMAL	CONDUIT REF #	CONDUIT	WIRE	PANEL	CIRCUIT	REMARK
ROOF TOP UNIT, 65 kAIC RATED																						
RTU 4-1	PACKAGED ROOFTOP UNIT	OPERATIONS BUILDING	OPER. BLDG	17.4 kW	480	3	60	-	41	50	60	50	DIV.26	N/A	N/A	NORMAL	19	1"	3#6 & 1#8G	DB4	4	POWER WIRING AND DISCONNECT BY EC
																						120V CIRCUIT FOR IONIZATION SYSTEM
RTU 4-2	PACKAGED ROOFTOP UNIT	OPERATIONS BUILDING	OPER. BLDG	7.1 kW	480	3	60	-	18	20	30	20	DIV.26	N/A	N/A	NORMAL	20	3/4"	3#12 & 1#12G	DB4	5	POWER WIRING AND DISCONNECT BY EC
																						120V CIRCUIT FOR IONIZATION SYSTEM
RTU 4-3	PACKAGED ROOFTOP UNIT	OPERTIONS BUILDING	OPER. BLDG	11.8 kW	480	3	60	-	29	40	60	40	DIV.26	N/A	N/A	NORMAL	21	3/4"	3#8 & 1#10G	DB4	6	POWER WIRING AND DISCONNECT BY EC
																						120V CIRCUIT FOR IONIZATION SYSTEM
RTU 4-4	PACKAGED ROOFTOP UNIT	OPERATIONS BUILDING	OPER. BLDG	10.5 kW	480	3	60	-	25	30	30	30	DIV.26	N/A	N/A	NORMAL	22	3/4"	3#10 & 1#10G	DB4	7	POWER WIRING AND DISCONNECT BY EC
																						120V CIRCUIT FOR IONIZATION SYSTEM
RTU 5-1	PACKAGED ROOFTOP UNIT	MAINTENANCE BUILDING	2ND FLR OFFICES	19.7 kW	480	3	60	-	49	60	60	50	DIV.26	N/A	N/A	NORMAL	106	1"	3#6 & 1#8G	5HP	1	POWER WIRING AND DISCONNECT BY EC
																						120V CIRCUIT FOR IONIZATION SYSTEM
RTU 5-2	PACKAGED ROOFTOP UNIT	MAINTENANCE BUILDING	BREAK ROOM	17.6 kW	480	3	60	-	41	50	60	50	DIV.26	N/A	N/A	NORMAL	107	1"	3#6 & 1#8G	5HP	2	POWER WIRING AND DISCONNECT BY EC
																						120V CIRCUIT FOR IONIZATION SYSTEM
RTU 5-3	PACKAGED ROOFTOP UNIT	MAINTENANCE BUILDING	REVENUE OFFICES	17.6 kW	480	3	60	-	41	50	60	50	DIV.26	N/A	N/A	NORMAL	108	1-1/4"	3#4 & 1#8G	5HP	3	POWER WIRING AND DISCONNECT BY EC
																						120V CIRCUIT FOR IONIZATION SYSTEM
RTU 5-4	PACKAGED AIR...	MAINTENANCE BUILDING	OFFICE	1.8 kW	208	1	60	-	20.6	30	30	30	DIV.26	N/A	N/A	NORMAL	-	3/4"	2#10 & 1#10G	5LM	31,33	POWER WIRING AND DISCONNECT BY EC
																						120V CIRCUIT FOR IONIZATION SYSTEM
RTU 5-5	PACKAGED AIR...	MAINTENANCE BUILDING	OFFICE	1.8 kW	208	1	60	-	20.6	30	30	30	DIV.26	N/A	N/A	NORMAL	-	3/4"	2#10 & 1#10G	5LM	35,37	POWER WIRING AND DISCONNECT BY EC
																						120V CIRCUIT FOR IONIZATION SYSTEM
RTU 6-1	PACKAGED AIR...	FUEL/BRAKE/TIRE REPAIR...	FUEL BLDG	4.1 kW	208	1	60	-	31.9	50	60	50	DIV.26	N/A	N/A	NORMAL	-	3/4"	2#10 & 1#10G	6LB	2,4	POWER WIRING AND DISCONNECT BY EC
																						120V CIRCUIT FOR IONIZATION SYSTEM
HEATING PUMP, 65 kAIC RATED																						
HP 5-1	HEAT PUMP	MAINTENANCE BUILDING	BLDG OFFICE		208	1	60	-	20.6	30	30	30	DIV.26	N/A	N/A	NORMAL	-	3/4"	2#10 & 1#10G	5LG	22.24	POWER WIRING AND DISCONNECT BY EC
																						120V CIRCUIT FOR IONIZATION SYSTEM
HP 6-1	HEAT PUMP	FUEL/BRAKE/TIRE REPAIR...	CONTROL		208	1	60	-	20.6	30	30	30	DIV.26	N/A	N/A	NORMAL	-	3/4"	2#10 & 1#10G	LB	6,8	POWER WIRING AND DISCONNECT BY EC
																						120V CIRCUIT FOR IONIZATION SYSTEM
AIR CONDITIONING UNIT, 65 kAIC RATED																						
AC 4-1	PACKAGED COOLING UNIT	OPERATIONS BUILDING	COMPUTER ROOM	3.4kW	208	1	60	-	16.7	25	30	25	DIV.26	N/A	N/A	NORMAL	-	3/4"	2#10 & 1#10G	4LC	30,32	POWER WIRING AND DISCONNECT BY EC
																						120V CIRCUIT FOR LIGHT AND RECEPTACLE
AC 4-2	PACKAGED COOLING UNIT	OPERATIONS BUILDING	TELECOM ROOM	3.4kW	208	1	60	-	16.7	25	30	25	DIV.26	N/A	N/A	NORMAL	-	3/4"	2#10 & 1#10G	4LC	34,36	POWER WIRING AND DISCONNECT BY EC
																						120V CIRCUIT FOR LIGHT AND RECEPTACLE
AC 5-1	PACKAGED COOLING UNIT	MAINTENANCE BUILDING	COMM ROOM	3.4kW	208	1	60	-	16.7	25	30	25	DIV.26	N/A	N/A	NORMAL	-	3/4"	2#10 & 1#10G	5LJ	34,36	POWER WIRING AND DISCONNECT BY EC
																						120V CIRCUIT FOR LIGHT AND RECEPTACLE
AC 5-2	PACKAGED COOLING UNIT	MAINTENANCE BUILDING	LAN ROOM	3.4kW	208	1	60	-	16.7	25	30	25	DIV.26	N/A	N/A	NORMAL	-	3/4"	2#10 & 1#10G	5LQ	37,39	POWER WIRING AND DISCONNECT BY EC
																						120V CIRCUIT FOR LIGHT AND RECEPTACLE
AC 6-1	PACKAGED COOLING UNIT	FUEL/BRAKE/TIRE REPAIR...	COMM	3.4kW	208	1	60	-	16.7	25	30	25	DIV.26	N/A	N/A	NORMAL	-	3/4"	2#10 & 1#10G	6LB	38,40	POWER WIRING AND DISCONNECT BY EC
																						120V CIRCUIT FOR LIGHT AND RECEPTACLE
MAKEUP AIR UNITS																						
MAU 5-1	MAKEUP AIR UNIT	MAINTENANCE BUILDING	OPER. BLDG	20	480	3	60	28.1	35	50	60	50	DIV.26	N/A	N/A	NORMAL	-	3/4"	3#10 & 1#10G	5HP	4	POWER WIRING AND DISCONNECT BY EC
MAU 5-2	MAKEUP AIR UNIT	MAINTENANCE BUILDING	OPER. BLDG	15	480	3	60	22.1	27.6	40	60	40	DIV.26	N/A	N/A	NORMAL	110	3/4"	3#10 & 1#10G	5HP	5	POWER WIRING AND DISCONNECT BY EC
MAU 5-3	MAKEUP AIR UNIT	MAINTENANCE BUILDING	OPER. BLDG	15	480	3	60	22.1	27.6	40	60	40	DIV.26	N/A	N/A	NORMAL	111	3/4"	3#10 & 1#10G	5HP	6	POWER WIRING AND DISCONNECT BY EC
MAU 5-4	MAKEUP AIR UNIT	MAINTENANCE BUILDING	OPER. BLDG	15	480	3	60	22.1	27.6	40	60	40	DIV.26	N/A	N/A	NORMAL	112	3/4"	3#10 & 1#10G	5HP	7	POWER WIRING AND DISCONNECT BY EC
MAU 5-5	MAKEUP AIR UNIT	MAINTENANCE BUILDING	2ND FLR OFFICES	15	480	3	60	22.1	27.6	40	60	40	DIV.26	N/A	N/A	NORMAL	113	3/4"	3#10 & 1#10G	5HP	8	POWER WIRING AND DISCONNECT BY EC
MAU 5-6	MAKEUP AIR UNIT	MAINTENANCE BUILDING	BREAK ROOM	15	480	3	60	22.1	27.6	40	60	40	DIV.26	N/A	N/A	NORMAL	114	1"	3#10 & 1#10G	5HP	9	POWER WIRING AND DISCONNECT BY EC
MAU 5-7	MAKEUP AIR UNIT	MAINTENANCE BUILDING	REVENUE OFFICES	7 1/2	480	3	60	12.1	15.1	20	30	20	DIV.26	N/A	N/A	NORMAL	115	3/4"	3#12 & 1#12G	5HP	10	POWER WIRING AND DISCONNECT BY EC
MAU 5-8	MAKEUP AIR UNIT	MAINTENANCE BUILDING	OFFICE	3	480	3	60	5.9	7.4	15	30	15	DIV.26	N/A	N/A	NORMAL	140	3/4"	3#12 & 1#12G	5HP	11	POWER WIRING AND DISCONNECT BY EC
MAU 5-9 (E)	MAKEUP AIR UNIT	MAINTENANCE BUILDING	PAINT BOOTH	-	480	3	60	-	-	-	-	-	DIV.26	N/A	N/A	NORMAL	-	-	-	5HJ	19	EXISTING TO REMAIN

REGISTERED PROFESSIONAL ENGINEER
PAUL K. ERIKSON
No. 11219
exp.06/30/2025
ELECTRICAL
STATE OF CALIFORNIA

05-13-2024

IFB 4-2550 EXHIBIT B

Stantec
801 S. Figueroa Street, Suite 300
Los Angeles, CA 90017

Copyright Reserved
The contractor shall verify and be responsible for all dimensions. DO NOT scale the drawing - any errors or omissions shall be reported to Stantec without delay.
This drawing is the property of Stantec and shall not be reproduced in whole or in part. Reproduction or use for any purpose other than that authorized by Stantec is prohibited.

REVISION	DESCRIPTION	DATE
4	100% RESUBMITTAL	05/13/2024
3	100% CONSTRUCTION DRAWING SUBMITTAL	03/27/2024
2	90% UPDATED CONSTRUCTION SUBMITTAL	02/13/2024
1	90% CONSTRUCTION DRAWING SUBMITTAL	12/07/2023

REPLACEMENT OF MECHANICAL UNITS AT SANTA ANA BUS BASE
4301 W. MAC ARTHUR BLVD., SANTA ANA, CA

CONDUIT SCHEDULES

JOB #:
DESIGN BY: IZ
DRAWN BY: AD
CHECKED BY: PKE
DATE: 02/13/2024
SCALE:
SHEET: **E-800P**

OCTA
ORANGE COUNTY TRANSPORTATION AUTHORITY
550 SOUTH MAIN STREET, ORANGE, CA

Autodesk Docs://2014233703_Santa_Ana_Bus/elec_SantaAnaBus_2014233703.rvt

5/8/2024 9:59:52 AM

EQUIP TAG	DESCRIPTION	LOCATION	SERVICE	MOTOR POWER (OR) HP	ELECTRICAL DATA VOLTS	ø	HZ	FLA(A)	MCA(A)	MOCP(A)	DISCONNECT FRAME(A)	FUSE SIZE (A)	BY	STARTER TYPE	BY	EMERGENCY / NORMAL	CONDUIT REF #	CONDUIT	WIRE	PANEL	CIRCUIT	REMARK
EF 4-1	EXHAUST FAN	OPERATIONS BUILDING	OPER BLDG REST RM	1/4	120	1	60	2.9	4	15	-	-	DIV.26	N/A	N/A	NORMAL	-	3/4"	2#10 & 1#10G	4LC	2	MOTOR RATED SWITCH
EF 4-2	EXHAUST FAN	OPERATIONS BUILDING	OPER BLD MEN'S RM	1/4	120	1	60	3.5	4	15	-	-	DIV.26	N/A	N/A	NORMAL	-	3/4"	2#10 & 1#10G	4LC	4	MOTOR RATED SWITCH
EF 4-3	EXHAUST FAN	OPERATIONS BUILDING	OPER BLD ELEC RM 103	1/4	120	1	60	3.5	4	15	-	-	DIV.26	N/A	N/A	NORMAL	-	3/4"	2#10 & 1#10G	4LC	6	MOTOR RATED SWITCH
EF 4-4	EXHAUST FAN	OPERATIONS BUILDING	OPER BLDG LOCKER	1/10	120	1	60	1.5	2	15	-	-	DIV.26	N/A	N/A	NORMAL	-	3/4"	2#10 & 1#10G	4LC	8	MOTOR RATED SWITCH
EF 5-1	EXHAUST FAN	MAINTENANCE BUILDING	RUNNING REPAIR RM 181	25	480	3	60	34	42.5	70	100	70	DIV.26	2	DIV.23	NORMAL	141	1-1/4"	6#8 & 1#10G	MCC5A	2	POWER WIRING AND DISCONNECT BY EC
EF 5-2	EXHAUST FAN	MAINTENANCE BUILDING	RM 181	15	480	3	60	21	26.2	45	60	45	DIV.26	2	DIV.23	NORMAL	142	1"	6#10 & 1#10G	MCC5A	3	POWER WIRING AND DISCONNECT BY EC
EF 5-3	EXHAUST FAN	MAINTENANCE BUILDING	RM 178	15	480	3	60	21	26.2	45	60	45	DIV.26	2	DIV.23	NORMAL	143	1"	6#10 & 1#10G	MCC5A	4	POWER WIRING AND DISCONNECT BY EC
EF 5-4	EXHAUST FAN	MAINTENANCE BUILDING	RM 178	15	480	3	60	21	26.2	45	60	45	DIV.26	2	DIV.23	NORMAL	144	1"	6#10 & 1#10G	MCC5A	5	POWER WIRING AND DISCONNECT BY EC
EF 5-5	EXHAUST FAN	MAINTENANCE BUILDING	RM 178	15	480	3	60	21	26.2	45	60	45	DIV.26	2	DIV.23	NORMAL	145	1"	6#10 & 1#10G	MCC5A	6	POWER WIRING AND DISCONNECT BY EC
EF 5-6	EXHAUST FAN	MAINTENANCE BUILDING	STEAM CLEANER	5	480	3	60	7.6	9.5	15	30	15	DIV.26	1	DIV.23	NORMAL	146	3/4"	6#12 & 1#12G	MCC5A	7	POWER WIRING AND DISCONNECT BY EC
EF 5-7	EXHAUST FAN	MAINTENANCE BUILDING	PARTS RM 135	2	480	3	60	3.4	4.25	15	30	15	DIV.26	1	DIV.23	NORMAL	126	3/4"	3#12 & 1#12G	MCC5	26	POWER WIRING AND DISCONNECT BY EC
EF 5-8	EXHAUST FAN	MAINTENANCE BUILDING	PARTS RM 135	2	480	3	60	3.4	4.25	15	30	15	DIV.26	1	DIV.23	NORMAL	127	3/4"	3#12 & 1#12G	MCC5	27	POWER WIRING AND DISCONNECT BY EC
EF 5-9	EXHAUST FAN	MAINTENANCE BUILDING	PARTS RM 135	2	480	3	60	3.4	4.25	15	30	15	DIV.26	1	DIV.23	NORMAL	128	3/4"	3#12 & 1#12G	MCC5	28	POWER WIRING AND DISCONNECT BY EC
EF 5-10	EXHAUST FAN	MAINTENANCE BUILDING	PARTS RM 135	2	480	3	60	3.4	4.25	15	30	15	DIV.26	1	DIV.23	NORMAL	129	3/4"	3#12 & 1#12G	MCC5	29	POWER WIRING AND DISCONNECT BY EC
EF 5-11	EXHAUST FAN	MAINTENANCE BUILDING	JAN RM 219	1/15	120	1	60	1.3	2.00	15	-	-	DIV.26	N/A	N/A	NORMAL	-	3/4"	2#12 & 1#12G	5LP	32	MOTOR RATED SWITCH
EF 5-12 (E)	EXHAUST FAN	MAINTENANCE BUILDING	MEN'S RM 214, WOMEN 213	(E)	120	1	60	-	-	-	-	-	DIV.26	N/A	N/A	NORMAL	-	3/4"	2#12 & 1#12G	5LP	34	EXISTING TO REMAIN
EF 5-13	EXHAUST FAN	MAINTENANCE BUILDING	MEN'S RM 109	1/4	120	1	60	3.5	4	15	-	-	DIV.26	N/A	N/A	NORMAL	-	3/4"	2#12 & 1#12G	5LP	36	MOTOR RATED SWITCH
EF 5-14 (E)	EXHAUST FAN	MAINTENANCE BUILDING	WOMEN/SH RM 115	(E)	120	1	60	-	-	-	-	-	DIV.26	N/A	N/A	NORMAL	-	3/4"	2#12 & 1#12G	5LP	38	EXISTING TO REMAIN
EF 5-15 (E)	EXHAUST FAN	MAINTENANCE BUILDING	JAN RM 114	(E)	120	1	60	-	-	-	-	-	DIV.26	N/A	N/A	NORMAL	-	-	-	5LP	40	EXISTING TO REMAIN
EF 5-16	EXHAUST FAN	MAINTENANCE BUILDING	REBUILT RM 106	2	480	3	60	3.4	4.25	15	30	15	DIV.26	N/A	N/A	NORMAL	130	3/4"	3#12 & 1#12G	MCC5	30	POWER WIRING AND DISCONNECT BY EC
EF 5-17	EXHAUST FAN	MAINTENANCE BUILDING	REBUILT RM 107	2	480	3	60	3.4	4.25	15	30	15	DIV.26	1	DIV.23	NORMAL	131	3/4"	3#12 & 1#12G	MCC5	31	POWER WIRING AND DISCONNECT BY EC
EF 5-18	EXHAUST FAN	MAINTENANCE BUILDING	REBUILT RM 108	2	480	3	60	3.4	4.25	15	30	15	DIV.26	1	DIV.23	NORMAL	132	3/4"	3#12 & 1#12G	MCC5	32	POWER WIRING AND DISCONNECT BY EC
EF 5-19	EXHAUST FAN	MAINTENANCE BUILDING	BREAK RM 121	1 1/2	480	3	60	3	3.75	15	30	15	DIV.26	1	DIV.23	NORMAL	133	3/4"	3#12 & 1#12G	MCC5	33	POWER WIRING AND DISCONNECT BY EC
EF 5-20	EXHAUST FAN	MAINTENANCE BUILDING	CLEAN SHOP 141	1	480	3	60	2.1	2.63	15	30	15	DIV.26	1	DIV.23	NORMAL	134	3/4"	3#12 & 1#12G	MCC5	34	POWER WIRING AND DISCONNECT BY EC
EF 5-21	EXHAUST FAN	MAINTENANCE BUILDING	MACHINE RM 144	1	480	3	60	2.1	2.63	15	30	15	DIV.26	1	DIV.23	NORMAL	135	3/4"	3#12 & 1#12G	MCC5	35	POWER WIRING AND DISCONNECT BY EC
EF 5-22	EXHAUST FAN	MAINTENANCE BUILDING	MACHINE RM 145	1	480	3	60	2.1	2.63	15	30	15	DIV.26	1	DIV.23	NORMAL	136	3/4"	3#12 & 1#12G	MCC5	36	POWER WIRING AND DISCONNECT BY EC
EF 5-23 (E)	EXHAUST FAN	MAINTENANCE BUILDING	COMP REP RM 143	(E)	480	3	60	-	-	-	-	-	DIV.26	-	-	NORMAL	-	-	-	5LM	39	EXISTING TO REMAIN
EF 5-24	EXHAUST FAN	MAINTENANCE BUILDING	BLDG MAIN. RM 150	3/4	480	3	60	1.6	2	15	30	15	DIV.26	1	DIV.23	NORMAL	137	3/4"	3#12 & 1#12G	MCC5	37	POWER WIRING AND DISCONNECT BY EC
EF 5-25	EXHAUST FAN	MAINTENANCE BUILDING	COMP EXCH RM 148	7 1/2	480	3	60	11	13.8	20	30	20	DIV.26	1	DIV.23	NORMAL	147	3/4"	6#12 & 1#12G	MCC5A	8	POWER WIRING AND DISCONNECT BY EC
EF 5-26	EXHAUST FAN	MAINTENANCE BUILDING	REV. TOIL. RM 160/161	1/10	120	1	60	1.5	2	15	-	-	DIV.26	N/A	N/A	NORMAL	-	3/4"	2#12 & 1#12G	5LS	2	MOTOR RATED SWITCH
EF 5-27 (E)	EXHAUST FAN	MAINTENANCE BUILDING	LOCKER RM 167	(E)	120	1	60	-	-	-	-	-	DIV.26	-	-	NORMAL	-	-	-	5LS	4	EXISTING TO REMAIN
EF 5-28	EXHAUST FAN	MAINTENANCE BUILDING	BODY SHOP RM 174	20	480	3	60	27	33.8	60	60	50	DIV.26	2	DIV.23	NORMAL	148	1"	6#10 & 1#10G	MCC5A	9	POWER WIRING AND DISCONNECT BY EC
EF 5-29	EXHAUST FAN	MAINTENANCE BUILDING	STORAGE RM 155	3/4	480	3	60	1.6	2	15	30	15	DIV.26	1	DIV.23	NORMAL	138	3/4"	3#12 & 1#12G	MCC5	38	POWER WIRING AND DISCONNECT BY EC
EF 5-30 (E)	EXHAUST FAN	MAINTENANCE BUILDING	TEL RM 136	(E)	120	1	60	-	-	-	-	-	DIV.26	-	-	NORMAL	-	-	-	5LH	24	EXISTING TO REMAIN
EF 5-31	EXHAUST FAN	MAINTENANCE BUILDING	ELEC RM 137	2	480	3	60	3.2	4	15	30	15	DIV.26	N/A	N/A	NORMAL	-	3/4"	3#12 & 1#12G	5HE	20	POWER WIRING AND DISCONNECT BY EC
EF 5-32	EXHAUST FAN	MAINTENANCE BUILDING	LUBE RM 138	1/10	120	1	60	1.5	2	15	-	-	DIV.26	N/A	N/A	NORMAL	-	3/4"	2#10 & 1#10G	5LH	24	MOTOR RATED SWITCH
EF 5-33	EXHAUST FAN	MAINTENANCE BUILDING	C.A. RM 139	3	480	3	60	4.8	6	15	30	15	DIV.26	N/A	N/A	NORMAL	-	3/4"	3#12 & 1#12G	5HE	20	POWER WIRING AND DISCONNECT BY EC
EF 5-34	EXHAUST FAN	MAINTENANCE BUILDING	ELEC RM 185	2	480	3	60	3.2	4	15	30	15	DIV.26	N/A	N/A	NORMAL	-	3/4"	3#12 & 1#12G	5HA	28	POWER WIRING AND DISCONNECT BY EC
EF 5-35	EXHAUST FAN	MAINTENANCE BUILDING	ELEC RM 184	1/2	120	1	60	6.4	8	15	-	-	DIV.26	N/A	N/A	NORMAL	128	3/4"	3#12 & 1#12G	5LA	6	MOTOR RATED SWITCH
EF 5-36 (E)	EXHAUST FAN	MAINTENANCE BUILDING	ELEC RM 220	(E)	480	3	60	-	-	-	-	-	DIV.26	-	-	NORMAL	-	-	-	MCC5	10	EXISTING TO REMAIN
EF 5-37	EXHAUST FAN	MAINTENANCE BUILDING	ENG. DYN. RM 103	7 1/2	480	3	60	11	13.8	20	30	20	DIV.26	1	DIV.23	NORMAL	-	3/4"	3#12 & 1#12G	MCC5A	11	POWER WIRING AND DISCONNECT BY EC
EF 5-38	EXHAUST FAN	MAINTENANCE BUILDING	TRAN DYN. RM 105	1/4	120	1	60	3.5	4	15	-	-	DIV.26	N/A	N/A	NORMAL	-	3/4"	2#12 & 1#12G	5LN	10	MOTOR RATED SWITCH
EF 5-39	EXHAUST FAN	MAINTENANCE BUILDING	EQUIP. STOR. RM 129	1/6	120	1	60	2.3	3	15	-	-	DIV.26	N/A	N/A	NORMAL	-	3/4"	2#12 & 1#12G	5LD	6	MOTOR RATED SWITCH
EF 5-40	EXHAUST FAN	MAINTENANCE BUILDING	LOADING ABY RM 170	1/4	120	1	60	3.5	4	15	-	-	DIV.26	N/A	N/A	NORMAL	-	3/4"	2#12 & 1#12G	5LK	3	MOTOR RATED SWITCH
EF 5-41	EXHAUST FAN	MAINTENANCE BUILDING	UPHOLSTERY SHOP RM...	1/4	120	1	60	3.5	4	15	-	-	DIV.26	N/A	N/A	NORMAL	-	3/4"	2#12 & 1#12G	5LS	6	MOTOR RATED SWITCH
EF 5-42	EXHAUST FAN	MAINTENANCE BUILDING	FUEL RM 102	1/4	120	1	60		7.25	15	-	-	DIV.26	N/A	N/A	NORMAL	-	3/4"	2#12 & 1#12G	5LT	13	MOTOR RATED SWITCH
EF 5-43 (E)	EXHAUST FAN	MAINTENANCE BUILDING	PAINT BOOTH	(E)	-	-	-	-	-	-	-	-	DIV.26	-	-	NORMAL	-	-	-	5HJ	19	EXISTING TO REMAIN
EF 6-1	EXHAUST FAN	FUEL/BRAKE/TIRE REPAIR...	BRAKE/BST RM 114/001	20	480	3	60	27	33.8	50	60	50	DIV.26	2	DIV.23	NORMAL	171	1"	6#10 & 1#10G	MCC6	2	POWER WIRING AND DISCONNECT BY EC
EF 6-2	EXHAUST FAN	FUEL/BRAKE/TIRE REPAIR...	FUEL AREA RM 115	15	480	3	60	21	26.2	40	60	40	DIV.26	2	DIV.23	NORMAL	172	1"	6#10 & 1#10G	MCC6	3	POWER WIRING AND DISCONNECT BY EC
EF 6-3	EXHAUST FAN	FUEL/BRAKE/TIRE REPAIR...	BODY/SHOP 118/116	10	480	3	60	14	17.5	30	30	30	DIV.26	1	DIV.23	NORMAL	173	3/4"	6#12 & 1#12G	MCC6	4	POWER WIRING AND DISCONNECT BY EC
EF 6-4	EXHAUST FAN	FUEL/BRAKE/TIRE REPAIR...	MEN'S RM	1/15	120	1	60	1.3	2	15	-	-	DIV.26	N/A	N/A	NORMAL	-	3/4"	2#12 & 1#12G	6LB	1	MOTOR RATED SWITCH
EF 6-5 (E)	EXHAUST FAN	FUEL/BRAKE/TIRE REPAIR...	WOMEN'S RM	(E)	120	1	60	-	-	-	-	-	DIV.26	-	-	NORMAL	-	-	-	6LB	3	EXISTING TO REMAIN
EF 6-6	EXHAUST FAN	FUEL/BRAKE/TIRE REPAIR...	LOCKER/LAUNDRY	1/10	120	1	60	1.5	2	15	-	-	DIV.26	N/A	N/A	NORMAL	-	3/4"	2#12 & 1#12G	6LB	5	MOTOR RATED SWITCH
EF 6-7	EXHAUST FAN	FUEL/BRAKE/TIRE REPAIR...	C.A. 111/TEL. 112	3	480	3	60	4.8	6	15	30	15	DIV.26	N/A	N/A	NORMAL	-	3/4"	3#12 & 1#12G	MCC5	9	POWER WIRING AND DISCONNECT BY EC
EF 6-8	EXHAUST FAN	FUEL/BRAKE/TIRE REPAIR BUILDING	FLUID TANK 110/GREESE TANK 109	1/10	120	1	60	1.5	2	15	-	-	DIV.26	N/A	N/A	NORMAL	-	3/4"	2#12 & 1#12G	6LB	9	MOTOR RATED SWITCH
EF 6-9	EXHAUST FAN	FUEL/BRAKE/TIRE REPAIR...	FUEL RM 115	1/2	120	1	60	6.4	8	15	-	-	DIV.26	N/A	N/A	NORMAL	-	3/4"	2#12 & 1#12G	6LB	42	MOTOR RATED SWITCH
EF 7-1	EXHAUST FAN	BUS WASH/BRAKE DYNO BUILDING	BUS WASH	2	480	3	60	3.4	4.25	15	30	15	DIV.26	N/A	N/A	NORMAL	174	3/4"	3#12 & 1#12G	MCC6	5	POWER WIRING AND DISCONNECT BY EC
EF 7-2	EXHAUST FAN	BUS WASH/BRAKE DYNO BUILDING	BUS WASH	2	480	3	60	3.4	4.25	15	30	15	DIV.26	N/A	N/A	NORMAL	174	3/4"	3#12 & 1#12G	MCC6	5	POWER WIRING AND DISCONNECT BY EC
EF 8-1	EXHAUST FAN	DETAIL/CLEANING BUILDING	DETAILING/CLEANIN EQUIP. RM	1/4	120	1	60	2.9	4	15	-	-	DIV.26	N/A	N/A	NORMAL	-	3/4"	2#12 & 1#12G	8LA	24	MOTOR RATED SWITCH

IFB 4-2550 EXHIBIT B

Stantec

801 S. Figueroa Street, Suite 300
Los Angeles, CA 90017

Copyright Reserved
The contractor shall verify and be responsible for all dimensions. DO NOT scale the drawing - any errors or omissions shall be reported to Stantec without delay.
The copyrights to all designs and drawings are the property of Stantec. Reproduction or use for any purpose other than that authorized by Stantec is prohibited.

REVISION	DESCRIPTION	DATE
4	100% RESUBMITTAL	05/13/2024
3	100% CONSTRUCTION DRAWING SUBMITTAL	03/27/2024
2	90% UPDATED CONSTRUCTION SUBMITTAL	02/13/2024
1	90% CONSTRUCTION DRAWING SUBMITTAL	12/07/2023

REGISTERED PROFESSIONAL ENGINEER
PAUL K. ERICSSON
No. 11219
exp.06/30/2025
ELECTRICAL
STATE OF CALIFORNIA

05-13-2024

REPLACEMENT OF MECHANICAL UNITS AT SANTA ANA BUS BASE
4301 W. MAC ARTHUR BLVD., SANTA ANA, CA

CONDUIT SCHEDULES

JOB #:
DESIGN BY: IZ
DRAWN BY: ERL
CHECKED BY: PKE
DATE: 02/13/2024
SCALE:
SHEET: **E-801P**

OCTA
ORANGE COUNTY TRANSPORTATION AUTHORITY
550 SOUTH MAIN STREET, ORANGE, CA

Autodesk Docs://2014233703_Santa_Ana_Bus/elec_SantaAnaBus_2014233703.rvt
5/8/2024 9:59:53 AM

EQUIP TAG	DESCRIPTION	LOCATION	SERVICE	MOTOR POWER (OR) HP	ELECTRICAL DATA						DISCONNECT			STARTER		EMERGENCY / NORMAL	CONDUIT REF #	CONDUIT	WIRE	PANEL	CIRCUIT	REMARK
					VOLTS	ø	HZ	FLA(A)	MCA(A)	MOCP(A)	FRAME(A)	FUSE SIZE (A)	BY	TYPE	BY							
SF 4-1	SUPPLY FAN	OPERATIONS BUILDING	ELEC RM 103	1/4	120	1	60	5.8	7.25	20	-	-	DIV.26	1	DIV.23	NORMAL	-	3/4"	2#12 & 1#12G	4LC	38	MOTOR RATED SWITCH
SF 5-1	SUPPLY FAN	MAINTENANCE BUILDING	PARTS RM 135	3	480	3	60	4.8	6	15	30	15	DIV.26	1	DIV.23	NORMAL	116	3/4"	3#12 & 1#12G	MCC5	16	POWER WIRING AND DISCONNECT BY EC
SF 5-2	SUPPLY FAN	MAINTENANCE BUILDING	PARTS RM 135	3	480	3	60	4.8	6	15	30	15	DIV.26	1	DIV.23	NORMAL	117	3/4"	3#12 & 1#12G	MCC5	17	POWER WIRING AND DISCONNECT BY EC
SF 5-3	SUPPLY FAN	MAINTENANCE BUILDING	PARTS RM 135	3	480	3	60	4.8	6	15	30	15	DIV.26	1	DIV.23	NORMAL	118	3/4"	3#12 & 1#12G	MCC5	18	POWER WIRING AND DISCONNECT BY EC
SF 5-4	SUPPLY FAN	MAINTENANCE BUILDING	REBUILT RM 106	5	480	3	60	7.6	9.5	15	30	15	DIV.26	1	DIV.23	NORMAL	119	3/4"	3#12 & 1#12G	MCC5	19	POWER WIRING AND DISCONNECT BY EC
SF 5-5	SUPPLY FAN	MAINTENANCE BUILDING	BRAKE RM 121	1.5	480	3	60	3	3.75	15	30	15	DIV.26	1	DIV.23	NORMAL	120	3/4"	3#12 & 1#12G	MCC5	20	POWER WIRING AND DISCONNECT BY EC
SF 5-6	SUPPLY FAN	MAINTENANCE BUILDING	CLEAN SHOP RM 141	1	480	3	60	2.1	2.63	15	30	15	DIV.26	1	DIV.23	NORMAL	121	3/4"	3#12 & 1#12G	MCC5	21	POWER WIRING AND DISCONNECT BY EC
SF 5-7 (E)	SUPPLY FAN	MAINTENANCE BUILDING	MECH SHOP RM 144	(E)	480	3	60	-	-	-	-	-	DIV.26	-	-	NORMAL	122	3/4"	3#12 & 1#12G	MCC5	22	EXISTING TO REMAIN
SF 5-8	SUPPLY FAN	MAINTENANCE BUILDING	COMP. SHOP.RM143	3/4	480	3	60	1.6	2	15	30	15	DIV.26	1	DIV.23	NORMAL	123	3/4"	3#12 & 1#12G	MCC5	23	POWER WIRING AND DISCONNECT BY EC
SF 5-9	SUPPLY FAN	MAINTENANCE BUILDING	BLD MAINT.RM 150	2	480	3	60	3.4	4.25	15	30	15	DIV.26	1	DIV.23	NORMAL	124	3/4"	3#12 & 1#12G	MCC5	24	POWER WIRING AND DISCONNECT BY EC
SF 5-10	SUPPLY FAN	MAINTENANCE BUILDING	STORAGE RM 155	1	480	3	60	2.1	2.63	15	30	15	DIV.26	1	DIV.23	NORMAL	125	3/4"	3#12 & 1#12G	MCC5	25	POWER WIRING AND DISCONNECT BY EC
SF 5-11 (E)	SUPPLY FAN	MAINTENANCE BUILDING	ELEC RM 137	(E)	480	3	60	-	-	-	-	-	DIV.26	-	-	NORMAL	-	-	-	5HE	20	EXISTING TO REMAIN
SF 5-12	SUPPLY FAN	MAINTENANCE BUILDING	ELEC RM 185	1/2	480	3	60	1.1	1.38	15	30	15	DIV.26	1	DIV.23	NORMAL	-	3/4"	3#12 & 1#12G	5HA	28	POWER WIRING AND DISCONNECT BY EC
SF 5-13	SUPPLY FAN	MAINTENANCE BUILDING	ELEC RM 184	1/2	480	3	60	1.1	1.38	15	30	15	DIV.26	1	DIV.23	NORMAL	-	3/4"	3#12 & 1#12G	5HA	28	POWER WIRING AND DISCONNECT BY EC
SF 5-14	SUPPLY FAN	MAINTENANCE BUILDING	ELEC RM 220	1 1/2	480	3	60	3	3.75	15	30	15	DIV.26	1	DIV.23	NORMAL	-	3/4"	3#12 & 1#12G	MCC5	11	POWER WIRING AND DISCONNECT BY EC
SF 5-15	SUPPLY FAN	MAINTENANCE BUILDING	TRAIN DYN. RM105	1/2	480	3	60	1.1	1.38	15	30	15	DIV.26	1	DIV.23	NORMAL	-	3/4"	3#12 & 1#12G	MCC5	8	POWER WIRING AND DISCONNECT BY EC
SF 5-16	SUPPLY FAN	MAINTENANCE BUILDING	LOADING ABY RM 170	1/2	480	3	60	1.1	1.38	15	30	15	DIV.26	1	DIV.23	NORMAL	-	3/4"	3#12 & 1#12G	MCC5	7	POWER WIRING AND DISCONNECT BY EC
SF 6-1	SUPPLY FAN	FUEL/BRAKE/TIRE REPAIR...	TIRE BAY RM 116	5	480	3	60	7.6	9.5	15	30	15	DIV.26	1	DIV.23	NORMAL	170	3/4"	3#12 & 1#12G	MCC6	6	POWER WIRING AND DISCONNECT BY EC
SF 6-2	SUPPLY FAN	FUEL/BRAKE/TIRE REPAIR...	BASEMENT 001	5	480	3	60	3.4	4.25	15	30	15	DIV.26	1	DIV.23	NORMAL	169	3/4"	3#12 & 1#12G	MCC6	7	POWER WIRING AND DISCONNECT BY EC

REGISTERED PROFESSIONAL ENGINEER
PAUL K. ERICSON
No. 11219
exp.06/30/2025
ELECTRICAL
STATE OF CALIFORNIA

05-13-2024

IFB 4-2550 EXHIBIT B

Stantec
801 S. Figueroa Street, Suite 300
Los Angeles, CA 90017

Copyright Reserved
The contractor shall verify and be responsible for all dimensions. DO NOT scale the drawing - any errors or omissions shall be reported to Stantec without delay.
This drawing is the property of Stantec and shall not be reproduced in whole or in part. Reproduction or use for any purpose other than that authorized by Stantec is prohibited.

REVISION	DESCRIPTION	DATE
4	100% RESUBMITTAL	05/13/2024
3	100% CONSTRUCTION DRAWING SUBMITTAL	03/27/2024
2	90% UPDATED CONSTRUCTION SUBMITTAL	02/13/2024
1	90% CONSTRUCTION DRAWING SUBMITTAL	12/07/2023

REPLACEMENT OF MECHANICAL UNITS AT SANTA ANA BUS BASE
4301 W. MAC ARTHUR BLVD., SANTA ANA, CA

CONDUIT SCHEDULES

JOB #:
DESIGN BY: IZ
DRAWN BY: AD
CHECKED BY: PKE
DATE: 02/13/2024
SCALE:
SHEET: **E-802P**

OCTA
ORANGE COUNTY TRANSPORTATION AUTHORITY
550 SOUTH MAIN STREET, ORANGE, CA

Autodesk Docs://2014233703_Santa_Ana_Bus/elec_SantaAnaBus_2014233703.rvt
5/8/2024 9:59:53 AM

IFB 4-2550 EXHIBIT B

ORANGE COUNTY TRANSPORTATION AUTHORITY
REPLACEMENT OF MECHANICAL UNITS AT SANTA ANA BUS BASE - MAINTENANCE BUILDING

4301 W MacArthur Blvd, Santa Ana, CA 92704
CONTRACT NO. C-4-2550

SHEET INDEX

GENERAL
G-000M COVERSHEET
G-100 MOVERALL SITE PLAN

MECHANICAL DEMO
MD-210M MAINTENANCE BUILDING MECHANICAL DEMO ROOF PLAN

ELECTRICAL DEMO
ED-220M MAINTENANCE BUILDING ELECTRICAL OVERALL DEMO ROOF PLAN
ED-221M MAINTENANCE BUILDING SECTION ONE ELECTRICAL DEMO ROOF PLAN
ED-222M MAINTENANCE BUILDING SECTION TWO ELECTRICAL DEMO ROOF PLAN
ED-223M MAINTENANCE BUILDING SECTION THREE ELECTRICAL DEMO ROOF PLAN

STRUCTURAL
S-100M GENERAL NOTES
S-200M OVERALL PLAN
S-301M MAINTENANCE BUILDING STRUCTURAL ROOF PLAN
S-600M ANCHORAGE SCHEDULES

ARCHITECTURAL
A-100M ARCHITECTURAL SITE PLAN
A-500M DETAILS

MECHANICAL
M-001M MECHANICAL GENERAL NOTES, SYMBOLS AND ANNOTATIONS
M-002M PROJECT NOTES AND SHEET INDEX
M-003M FAN SCHEDULE
M-004M ROOFTOP AND MAKE UP AIR SCHEDULES
M-005M HEAT PUMP AND AIR CONDITIONER SCHEDULES
M-006M MECHANICAL DETAILS
M-007M MECHANICAL DETAILS
M-008M MECHANICAL CONTROLS
M-009M MECHANICAL CONTROLS
M-210M MAINTENANCE BUILDING OVERALL MECHANICAL ROOF PLAN
M-211M MAINTENANCE BUILDING SECTION ONE MECHANICAL ROOF PLAN
M-212M MAINTENANCE BUILDING SECTION TWO MECHANICAL ROOF PLAN
M-213M MAINTENANCE BUILDING SECTION THREE MECHANICAL ROOF PLAN
M-300M TITLE 24 CODE COMPLIANCE
M-301M TITLE 24 CODE COMPLIANCE

ELECTRICAL
E-001M SYMBOLS, NOTES AND ANNOTATIONS
E-002M SCHEMATIC SYMBOLS AND ELECTRICAL DRAWING INDEX
E-220M MAINTENANCE BUILDING OVERALL ELECTRICAL ROOF PLAN
E-221M MAINTENANCE BUILDING SECTION ONE ELECTRICAL ROOF PLAN
E-222M MAINTENANCE BUILDING SECTION TWO ELECTRICAL ROOF PLAN
E-223M MAINTENANCE BUILDING SECTION THREE ELECTRICAL ROOF PLAN
E-500M ELECTRICAL DETAILS
E-600M ELECTRICAL SINGLE LINE DIAGRAM
E-601M ELECTRICAL SINGLE LINE DIAGRAM
E-700M PANEL SCHEDULES
E-701M PANEL SCHEDULES
E-702M PANEL SCHEDULES
E-703M PANEL SCHEDULES
E-704M PANEL SCHEDULES
E-800M CONDUIT SCHEDULES
E-801M CONDUIT SCHEDULES
E-802M CONDUIT SCHEDULES

GENERAL INFORMATION

APPLICABLE CODES:
2022 CALIFORNIA MECHANICAL CODE
2022 CALIFORNIA PLUMBING CODE
2022 NATIONAL ELECTRICAL CODE
2022 TITLE 24 REQUIREMENTS
CALGREEN STANDARDS

ABBREVIATIONS

(E)	EXISTING
AB	ANCHOR BOLT
AC	AIR CONDITIONING
ACT	ACOUSTICAL TILE
ADJ	ADJACENT/ADJUSTABLE
AFF	ABOVE FINISH FLOOR
AFG	ABOVE FINISH GRADE
AHU	AIR HANDLING UNIT
ALT	ALTERNATE NO.
ALUM	ALUMINUM
ANOD	ANODIZED
ANSI	AMERICAN NATIONAL STANDARDS INSTITUTE
APPD	APPROVED
APPROX	APPROXIMATELY
ARCH	ARCHITECT
AVG	AVERAGE
BD	BOARD
BLDG	BUILDING
BLKG	BLOCKING
BM	BEAM/BENCH MARK
BOS	BOTTOM OF STEEL
BOT	BOTTOM
BUR	BUILT UP ROOFING
CEM	CEMENT
CF	CUBIC FOOT / FEET
CF/CI	CONTRACTOR FURNISHED/CONTRACTOR INSTALLED
CF/OI	CONTRACTOR FURNISHED/OWNER INSTALLED
CIP	CAST IN PLACE
CJ	CONTROL JOINT / CONTRACTION JOINT
CL	CENTERLINE
CLG	CEILING
CLR	CLEAR
CMU	CONCRETE MASONRY UNIT
CO	CLEAN OUT
COL	COLUMN
CONC	CONCRETE
COND	CONDITION
CONST	CONSTRUCTION
CONT	CONTINUE / CONTINUATION / CONTINUOUS
COORD	COORDINATE
CPT	CARPET
CT	CERAMIC TILE
CTR	CENTER
CU FT	CUBIC FOOT / CUBIC FEET
CU YD	CUBIC YARDS
CW	COLD WATER
D	DEPTH / DEEP
DBL	DOUBLE
DEG	DEGREE
DEL	DELETE
DEMO	DEMOLITION
DIA	DIAMETER
DIAG	DIAGONAL
DIM	DIMENSION
DISP	DISPENSER
DN	DOWN
DR	DOOR / DRAIN
DTL	DETAIL
DWG	DRAWING
E	EAST
EA	EACH
EF	EXHAUST FAN
EJ	EXPANSION JOINT
EL	REFERENCE ELEVATION / EASEMENT LINE
ELEC	ELECTRIC / ELECTRICAL
ELEV	ELEVATOR / ELEVATION
EMER	EMERGENCY
ENGR	ENGINEER / ENGINEERING
EOS	EDGE OF SLAB
EPDM	ETHYLENE PROPYLENE DIENE MONOMOR
EQ	EQUAL
EQUIP	EQUIPMENT
EST	ESTIMATE
ETC	ET CETERA
EW	EACH WAY
EXP	EXPOSED / EXPAND / EXPANSION
FA	FIRE ALARM / FACE AREA / FRESH AREA
FACP	FIRE ALARM CONTROL PANEL
FD	FLOOR DRAIN
FDTN	FOUNDATION
FE	FIRE EXTINGUISHER
FEC	FIRE EXTINGUISHER CABINET
FH	FIRE HYDRANT / FIRE HOSE
FHC	FIRE HOSE CABINET
FIN	FINISH
FIXT	FIXTURE
FL	FLOW LINE / FLOOR LINE
FLR	FLOOR / FLOORING
FR	FRAME / FIRE RATED / FIRE RETARTANT
FT	FOOT / FEET / FIRE TREATED / FULLY TEMPERED

ABBREVIATIONS

FTG	FOOTING
FURN	FURNISH / FURNITURE
GA	GAGE
GAL	GALLONS
GALV	GALVANIZED
GC	GENERAL CONTRACTOR
GEN	GENERAL / GENERATOR
GL	GLASS / GROUND LEVEL
GLZ	GLAZING
GND	GROUND
GYP BD	GYPSUM BOARD
HC	HANDICAPPED ACCESSIBLE / HOLLOW CORE
HD	HEAD / HEAVY DUTY
HDW	HARDWARE
HM	HOLLOW METAL
HORIZ	HORIZONTAL
HT	HEIGHT
HVAC	HEATING VENTILATION AND AIR CONDITIONING
HW	HOT WATER
ID	INSIDE DIAMETER / INTERIOR DESIGN
IF	INSIDE FACE / INTAKE FAN
IN	INCHES
INCL	INCLUDING
INSTL	INSTALL
INSUL	INSULATE / INSULATION
INT	INTERIOR / INTERNAL
INV	INVERT
INV EL	INVERT ELEVATION
J BOX	JUNCTION BOX
JT	JOINT
LAM	LAMINATE
LAV	LAVATORY
LBS	POUNDS
LF	LINEAR FEET
LH	LEFT HAND
LTG	LIGHTING
MAINT	MAINTENANCE
MATL	MATERIAL
MAX	MAXIMUM
MECH	MECHANICAL
MED	MEDIUM
MEMB	MEMBRANE
MFG	MANUFACTURING
MFR	MANUFACTURER
MIN	MINIMUM
MISC	MISCELLANEOUS
MTL	METAL
N	NORTH
N/A	NOT APPLICABLE
NEG	NEGATIVE
NIC	NOT IN CONTRACT
NO	NUMBER
NOM	NOMINAL
NTS	NOT TO SCALE
OC	ON CENTER
OD	OUTSIDE DIAMETER / OUTSIDE DIMENSION
OF/CI	OWNER FURNISHED/CONTRACTOR INSTALLED
OF/OI	OWNER FURNISHED/OWNER INSTALLED
OH	OPPOSITE HAND / OVERHEAD / OVERHANG
OPP	OPPOSITE
ORIG	ORIGINAL
PAT	PATTERN
PCC	PRECAST CONCRETE
PERF	PERFORATED
PERM	PERMANENT
PL	PLATE / PROPERTY LINE
PLAM	PLASTIC LAMINATE
PLAS	PLASTER / PLASTIC
PLBG	PLUMBING
PLYWD	PLYWOOD
PNL	PANEL
PREFAB	PREFABRICATED
PREFIN	PREFINISHED
PRELIM	PRELIMINARY
PREP	PREPARATION
PROJ	PROJECT
PT	PAINT / PRESSURE TREATED
PVC	POLYVINYL CHLORIDE
QTY	QUANTITY
R	RADIUS / RISER
RA	RETURN AIR
RCP	REFLECTED CEILING PLAN
RD	ROOF DRAIN
REBAR	REINFORCED STEEL BAR
REF	REFERENCE / REFRIGERATOR
REINF	REINFORCED / REINFORCEMENT
REQD	REQUIRED
REV	REVISION
RH	RIGHT HAND
RM	ROOM

ABBREVIATIONS

RO	ROUGH OPENING
ROW	RIGHT OF WAY
RTU	ROOF TOP UNIT
S	SOUTH
SALV	SALVAGE
SAN	SANITARY
SCHED	SCHEDULE / SCHEDULED
SEC	SECOND
SECT	SECTION
SF	SQUARE FOOT / SQUARE FEET / SUPPLY FAN
SGL	SINGLE
SIM	SIMILAR
SM	SHEET METAL / SMALL / SURFACE MOUNTED
SPEC	SPECIFICATION(S)
SPLY	SUPPLY
SQ	SQUARE
SST	STAINLESS STEEL
STC	SOUND TRANSMISSION CLASS
STD	STANDARD
STL	STEEL
STL JST	STEEL JOIST
STOR	STORAGE
STRUCT	STRUCTURAL
SURF	SURFACE
SUSP	SUSPENDED
SYMM	SYMMETRICAL
T	TREAD
T&B	TOP AND BOTTOM
TBD	TO BE DETERMINED
TEL	TELEPHONE
TEMP	TEMPERATURE / TEMPORARY
THK	THICK / THICKNESS
THRES	THRESHOLD
THRU	THROUGH
TO	TOP OF ____
TOC	TOP OF CONCRETE / TOP OF CURB
TOJ	TOP OF JOIST
TOM	TOP OF MASONRY
TOP	TOP OF PARAPET / TOP OF PAVEMENT
TOS	TOP OF STEEL / TOP OF SLAB
TOW	TOP OF WALL
TS	TUBE STEEL
TYP	TYPICAL
UBC	UNIFORM BUILDING CODE
UC	UNDERCUT
UL	UNDERWRITER'S LABORATORIES
UNFIN	UNFINISHED
UNO	UNLESS NOTED OTHERWISE
UTIL	UTILITY
VAR	VARIES
VCT	VINYL COMPOSITION TILE
VERT	VERTICAL
VIF	VERIFY IN FIELD
W	WEST / WIDTH / WIDE
W/	WITH
W/O	WITHOUT
WC	WATER CLOSET / WALL COVERING
WD	WOOD / WOOD DOOR
WF	WIDE FLANGE
WT	WEIGHT
YD	YARD / YARDS

PROJECT LOCATION

VICINITY MAP

GENERAL NOTES

1 DO NOT SCALE DRAWINGS.
2 ITEMS INDICATED ON THESE DRAWINGS ARE NEW, UNLESS NOTED OTHERWISE.
3 CONTRACTOR TO PROVIDE ROOFTOP SUPPORT SYSTEMS PER SPECIFICATIONS FOR ALL PIPING, CONDUITS, AND ALL OTHER ITEMS NOT OTHERWISE DIRECTLY OR INDIRECTLY ATTACHED TO THE BUILDINGS, PROVIDE SYSTEMS AS REQUIRED TO ACCOMMODATE EXISTING PIPING, CONDUITS, ETC. AND ANY NEW PIPING, CONDUITS, ETC.
4 CONTRACTOR TO PROTECT IN PLACE ALL PORTIONS OF THE BUILDINGS NOT IN SCOPE OR NOT INTENDED TO BE DEMOLISHED OR OTHERWISE PATCHED AND REPAIRED.
5 THE FOLLOWING GENERAL NOTES APPLY TO THE ENTIRE SET OF DRAWINGS AND ARE NOT SPECIFIC TO ANY ONE DISCIPLINE
6 IT IS THE CONTRACTORS RESPONSIBILITY TO REVIEW AND COORDINATE THE WORK OF ALL SUB-CONTRACTORS, TRADES AND SUPPLIERS WITH REQUIREMENTS OF THE CONTRACT BEFORE COMMENCING CONSTRUCTION, AND ASSURE THAT ALL PARTIES ARE AWARE OF ALL REQUIREMENTS, REGARDLESS OF WHERE THE REQUIREMENTS OCCUR IN THE CONTRACT DOCUMENTS, WHICH MIGHT AFFECT THE WORK OF THAT PARTY.
7 THE WORK DESCRIBED BY THE DRAWINGS OF ANY ONE DISCIPLINE MAY BE AFFECTED BY THE WORK DESCRIBED ON DRAWINGS OF ANOTHER DISCIPLINE AND MAY REQUIRE CROSS REFERENCE. PARTIAL SETS OF DRAWINGS ARE INCOMPLETE AND SHOULD NOT BE DISTRIBUTED OR UTILIZED BY THE CONTRACTOR.
8 THE DRAWINGS AND SPECIFICATIONS ESTABLISH MINIMUM REQUIREMENTS FOR THE DESIGN AND CONSTRUCTION OF THE PROJECT.
9 ARCHITECT IS NOT RESPONSIBLE FOR ACCURACY OF EXISTING CONDITIONS SHOWN IN THESE DOCUMENTS. GC SHALL CONTACT ARCHITECT IMMEDIATELY IF ANY DISCREPANCIES OCCUR IN THE FIELD.
10 THE DRAWINGS IN THIS SET ARE DIAGRAMMATIC AND ILLUSTRATE THE INTENT OF THE DESIGN.
11 THE CONTRACTOR SHALL IDENTIFY AND NOTIFY IN WRITING TO THE ARCHITECT CONFLICTS BETWEEN THE WORK OF DIFFERENT PARTIES, AND DISCREPANCIES BETWEEN THE DOCUMENTS AND THE ACTUAL CONDITIONS AT THE EARLIEST POSSIBLE DATE SO AS TO ALLOW REASONABLE AND ADEQUATE TIME FOR THE CONFLICT TO BE RESOLVED WITHOUT DELAYING THE WORK. ALL DEVIATIONS FROM THAT WHICH IS REQUIRED BY THE CONTRACT DOCUMENTS MUST BE APPROVED IN ADVANCE BY THE ARCHITECT AND OWNER PRIOR TO PROCEEDING.
12 THE GENERAL NOTES, SYMBOLS AND DEFINITIONS APPLICABLE TO EACH DISCIPLINE CAN BE FOUND AT THE FRONT OF EACH DISCIPLINE'S SET OF DRAWINGS AND IS LISTED AS PART OF THE OVERALL PROJECT INDEX OF DRAWINGS.
13 THE CONTRACTOR IS RESPONSIBLE TO COMPLY WITH ALL APPLICABLE LAWS, CODES, REGULATIONS AND ORDINANCES OF THE PLACE (CITY, COUNTY, DISTRICT, AND STATE) WHERE THE PROJECT IS LOCATED.
14 THE CONTRACTOR SHALL OBTAIN ALL REQUIRED PERMITS (IF REQUIRED) AND SIMILAR RELEASES REQUIRED FOR THE CONSTRUCTION AND OCCUPANCY OF THE PROJECT. THE CONTRACTOR SHALL FURNISH COPIES OF ALL SUCH ITEMS TO THE OWNER AND ARCHITECT WITHIN 10 DAYS OF RECEIPT OF SUCH ITEMS. IF PERMITS ARE ISSUED SUBJECT TO CERTAIN CONDITIONS OR REVISIONS TO THE WORK OR IF PERMITS ARE DELAYED FOR ANY REASON, THE CONTRACTOR SHALL IMMEDIATELY NOTIFY THE OWNER AND ARCHITECT.
15 THE CONTRACTOR SHALL BE SOLELY RESPONSIBLE FOR MEANS, METHODS AND SEQUENCES OF CONSTRUCTION.
16 THE CONTRACTOR SHALL PROMPTLY REMOVE AND PROPERLY DISPOSE OF ALL CONSTRUCTION AND DEMOLITION DEBRIS. THE CONTRACTOR SHALL OBTAIN APPROVAL OF OWNER FOR DETAILS RELATED TO ALL SITE ACCESS AND REMOVAL PLANS
17 CONTRACTOR NOT TO STORE NEW OR REMOVED MECHANICAL UNITS ON BUILDING ROOFTOPS
18 THE CONTRACTOR SHALL BECOME FAMILIAR WITH AND COMPLY WITH OWNER'S PROCEDURES FOR MAINTAINING A SECURE SITE AND BUILDING AS NOTED IN THE OCTA DIVISION 1 SPECIFICATIONS.
19 EACH INSTALLER SHALL EXAMINE THE SUBSTRATE CONDITION AND/OR SITE CONDITIONS WHICH AFFECT THE QUALITY OF EACH PRODUCT TO BE INSTALLED. IF ANY CONDITIONS EXIST WHICH WILL HAVE A DETRIMENTAL EFFECT ON THE QUALITY OF THE INSTALLATION, THE INSTALLER SHALL IMMEDIATELY ADVISE THE CONTRACTOR. INSTALLATION SHALL NOT PROCEED UNTIL THE UNSATISFACTORY CONDITIONS ARE CORRECTED. INSTALLATION OF PRODUCTS SHALL SIGNIFY ACCEPTANCE BY THE INSTALLER OF THE SUBSTRATE CONDITIONS.
20 THE CONTRACTOR SHALL MAINTAIN A CURRENT/UPDATED RECORD OF DRAWINGS ON SITE AT ALL TIMES.
21 CONTRACTOR SHALL PROVIDE TEMPORARY HVAC UNITS WHILE THE PERMANENT MECHANICAL SYSTEMS ARE BEING REPLACED.
22 GC NOT TO PLACE CRANE OVER UNDERGROUND STORAGE TANKS.
23 CONTRACTOR TO COORDINATE WITH OCTA FACILITIES MAINTENANCE, SUBMITTING A LAYDOWN PLAN WITH CRANE LOCATIONS PER THE HSE SPECIFICATION DOCUMENTS. CONTRACTOR TO SUBMIT A CRANE PLAN FOR OCTA HSE DEPARTMENT TO REVIEW AND CERTIFY.
24 PATCH AND REPAIR EXISTING BUILT UP ROOFING SYSTEM AS NEEDED PER MFR REQUIREMENTS WITH A MINIMUM OVERLAP OF 48". SEE ALSO SPEC 07 52 16.
25 CONSTRUCTION SEQUENCE: THE WORK SHALL BE PERFORMED IN TWO PHASES, THE DEMOLITION PHASE, AND THE NEW CONSTRUCTION PHASE. ALL CRANE WORK FOR THE DEMOLITION PHASE INCLUDING REMOVAL OF EXISTING HVAC UNITS SHALL BE COMPLETED ON A NORMAL WORKDAY BETWEEN 7:00AM AND 4:00PM. ALL CRANE WORK FOR THE NEW CONSTRUCTION PHASE INCUDING SETTING THE NEW HVAC SHALL BE COMPLETED ON A SUBSEQUENT NORMAL WORK DAY BETWEEN 7:00AM AND 4:00PM.
26 ALL REMOVED DEMOLISHED EQUIPMENT SHALL BE LEGALLY DISPOSED OFF THE SITE THE SAME DAY OF REMOVAL AT CONTRACTOR'S EXPENSE.
27 CONTRACTOR TO PROVIDE TEMPORARY HVAC UNITS FOR BUILDINGS WHILE THE PERMENANT HVAC FOR THAT BUILDING IS BEING WORKED ON

GRAPHIC SYMBOLS LEGEND

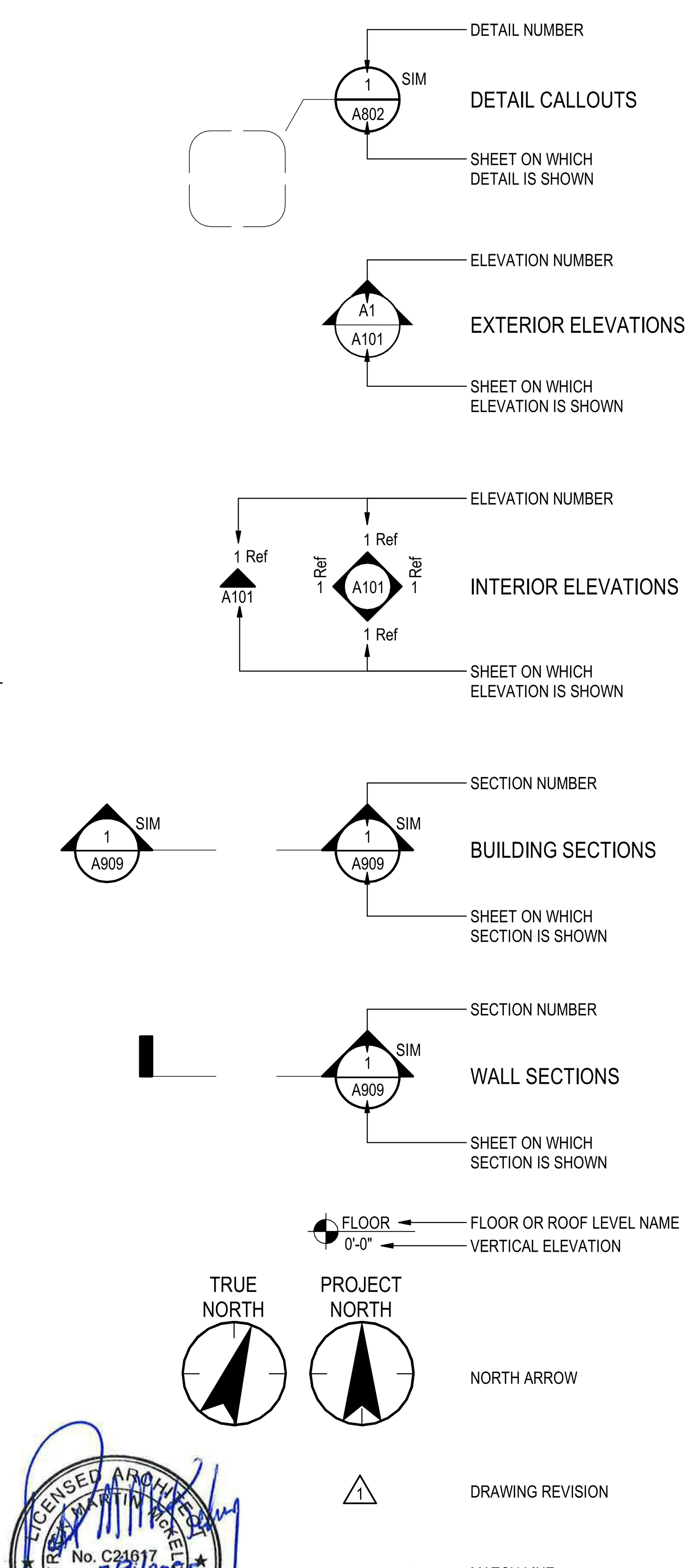

LICENSED ARCHITECT PATRICK MARTIN ... No. C21617 REN. 5/31/2025 STATE OF CALIFORNIA

Stantec
801 S. Figueroa Street, Suite 300
Los Angeles, CA 90017

Copyright Reserved
The Contractor shall verify and be responsible for all dimensions. DO NOT scale the drawing - any errors or omissions shall be reported to Stantec without delay.
The Copyrights to all designs and drawings are the property of Stantec. Reproduction or use for any purpose other than that authorized by Stantec is forbidden.

REVISION	DESCRIPTION	DATE
5	100% RESUBMITTAL 2	08/19/2024
	100% RESUBMITTAL	5/13/2024
3	100% CONSTRUCTION DRAWING SUBMITTAL	03/18/2024
2	90% UPDATED CONSTRUCTION SUBMITTAL	02/13/2024
1	90% CONSTRUCTION DRAWING SUBMITTAL	12/07/2023

REPLACEMENT OF MECHANICAL UNITS AT SANTA ANA BUS BASE
4301 W MacArthur Blvd, Santa Ana, CA 92704

COVERSHEET

JOB #:	
DESIGN BY:	Designer
DRAWN BY:	Author
CHECKED BY:	Checker
DATE:	
SCALE:	12" = 1'-0"
SHEET:	G-000M

OCTA
ORANGE COUNTY TRANSPORTATION AUTHORITY
550 SOUTH MAIN STREET, ORANGE, CA

Autodesk Docs://2014233703_Santa_Ana_Bus/arch_2014233703-Revit22.rvt

5/9/2024 10:14:27 AM

IFB 4-2550 EXHIBIT B

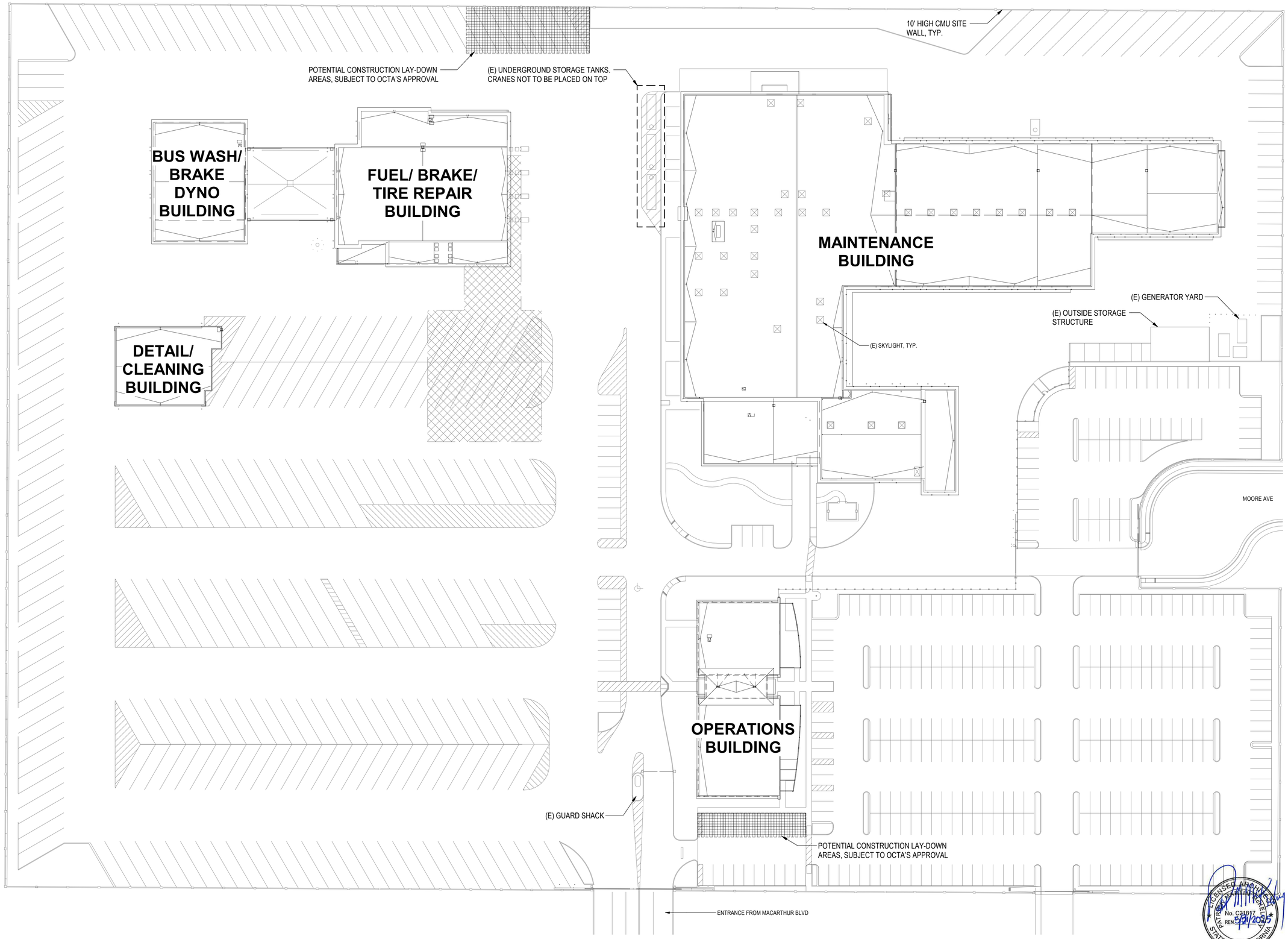

Stantec

801 S. Figueroa Street, Suite 300
Los Angeles, CA 90017

Copyright Reserved
The Contractor shall verify and be responsible for all dimensions. DO NOT scale the drawing. Any errors or omissions shall be reported to Stantec without delay.
The Copyright in all designs and drawings are the property of Stantec. Reproduction or use for any purpose other than that authorized by Stantec is forbidden.

REVISION	DESCRIPTION	DATE
	100% RESUBMITTAL	5/13/2024
3	100% CONSTRUCTION DRAWING SUBMITTAL	03/18/2024
2	90% UPDATED CONSTRUCTION SUBMITTAL	02/13/2024
1	90% CONSTRUCTION DRAWING SUBMITTAL	12/07/2023

REPLACEMENT OF MECHANICAL UNITS AT SANTA ANA BUS BASE
4301 W MacArthur Blvd, Santa Ana, CA 92704

OVERALL SITE PLAN

JOB #:	
DESIGN BY:	Designer
DRAWN BY:	Author
CHECKED BY:	Checker
DATE:	
SCALE:	1" = 40'-0"
SHEET:	G-100M

OCTA
ORANGE COUNTY TRANSPORTATION AUTHORITY
550 SOUTH MAIN STREET, ORANGE, CA

LICENSED ARCHITECT
PATRICK MARTIN PACKELL
No. C21617
REN. 5/31/2025
STATE OF CALIFORNIA

Autodesk Docs://2014233703_Santa_Ana_Bus/arch_2014233703-Revit22.rvt

5/9/2024 10:14:27 AM

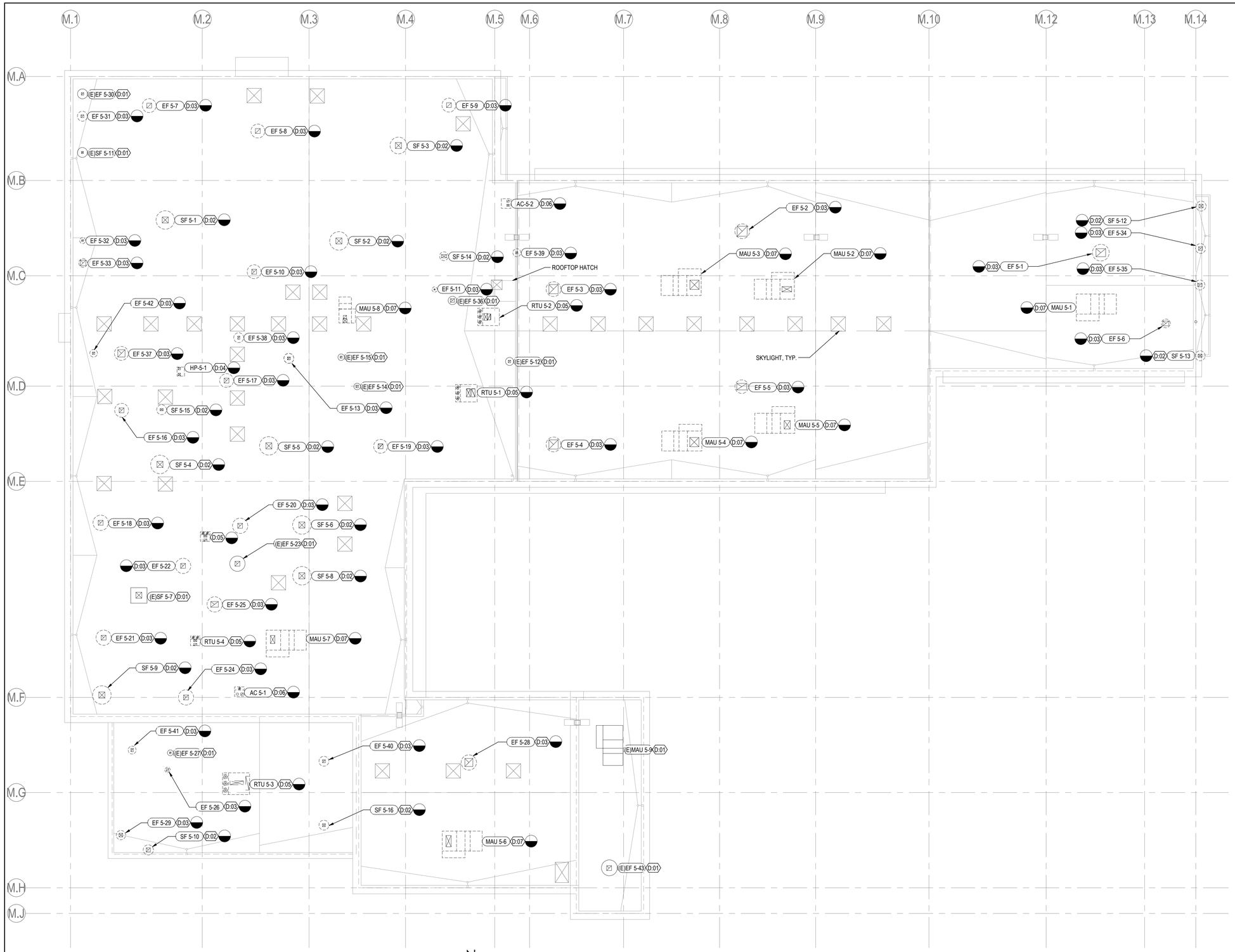

1
MD-210

MAINTENANCE BUILDING MECHANICAL DEMO ROOF PLAN

1" = 20'-0"

N

GENERAL NOTES

1. FOR ALL THE EXISTING EQUIPMENT NOTED TO BE RETAINED AND REUSED:
   BEFORE DEMOLITION COMMENCES ON SITE, THE CONTRACTOR SHALL SURVEY AND ESTABLISH CONDITION AND CAPACITIES. ANY DAMAGE OR DEFICIENCY TO EXISTING EQUIPMENT DISCOVERED BY THE CONTRACTOR SHALL BE RECORDED AT THIS STAGE BY THE CONTRACTOR AND A FULL WRITTEN REPORT SUBMITTED TO THE OWNERS REPRESENTATIVE FOR REVIEW. THE REPORT WILL INCLUDE PHOTOGRAPHIC EVIDENCE OF DAMAGE.
2. ALL POWER SUPPLIES TO EXISTING EQUIPMENT TO BE REMOVED SHALL BE ISOLATED AND MADE SAFE PER NEC PRIOR TO DEMOLITION STARTS.
3. THE PIPEWORK AND ASSOCIATED EQUIPMENT TO BE DEMOLISHED SHALL BE REMOVED FROM SITE.
4. ALL EQUIPMENT TO BE REUSED SHALL BE CAREFULLY REMOVED PRIOR TO DEMOLITON, AND STORED IN A PROTECTED AREA ON SITE READY FOR LATER RE-INSTALLATION. EQUIPMENT TO REMAIN IN PLACE SHALL BE WELL PROTECTED FROM DAMAGE OR DUST.,
5. NO EQUIPMENT SHALL BE STORED ON THE ROOF.
6. ANY DAMAGE TO EXISTING EQUIPMENT DURING DEMOLITION SHALL BE THE RESPONSIBILITY OF THE CONTRACTOR.
7. ALL PIPEWORK/VALVES IS TO BE REINSULATED TO COMPLY WITH THE SPECIFICATION REQUIREMENTS.
8. CONTRACTOR SHALL REMOVE CONSTRUCTION DEBRIS AND VACUUM CLEAN ALL RETAINED EQUIPMENT (INTERNAL AND EXTERNAL)- PRIOR TO TEST AND BALANCE.

DEMO WORK DEFINITION

EXISTING (E)

REMOVE EXISTING (D)

KEYNOTE

Keynote Legend

Key Value	Keynote Text
D:01	EXISTING MECHANICAL EQUIPMENT TO REMAIN.
D:02	EXISTING SUPPLY FAN TO BE DEMOLISHED.
D:03	EXISTING EXHAUST FAN TO BE DEMOLISHED.
D:04	EXISTING HEAT PUMP TO BE DEMOLISHED.
D:05	EXISTING ROOFTOP UNIT TO BE DEMOLISHED.
D:06	EXISTING AIR CONDITIONING UNIT TO BE DEMOLISHED.
D:07	EXISTING MAKEUP AIR UNIT TO BE DEMOLISHED.

Stantec
801 S. Figueroa Street, Suite 300
Los Angeles, CA 90017

Copyright Reserved
This Contract drawing shall not be used nor be responsible for all dimensions. DO NOT scale the drawing - in the case of omission shall be reported to Stantec without delay.
This drawing is the property of Stantec and shall not be reproduced in whole or in part. Reproduction or use for any purpose other than that authorized by Stantec is forbidden.

REVISION	DESCRIPTION	DATE
	100% RESUBMITTAL	5/13/2024
	100% CONSTRUCTION DRAWING SUBMITTAL	3/27/2024
	90% UPDATED CONSTRUCTION SUBMITTAL	2/13/2024
	90% CONSTRUCTION DRAWING SUBMITTAL	12/07/2023

REPLACEMENT OF MECHANICAL UNITS AT SANTA ANA BUS BASE

4301 W. MAC ARTHUR BLVD., SANTA ANA, CA

MAINTENANCE BUILDING MECHANICAL DEMO ROOF PLAN

JOB #:	
DESIGN BY:	SG
DRAWN BY:	RW
CHECKED BY:	GY
DATE:	
SCALE:	As indicated
SHEET:	MD-210M

LICENSED PROFESSIONAL ENGINEER
SIYAR GALSTIAN
M 39730
EXP. 12/31/25
MECHANICAL
STATE OF CALIFORNIA

OCTA
ORANGE COUNTY TRANSPORTATION AUTHORITY
550 SOUTH MAIN STREET, ORANGE, CA

Autodesk Docs://2014233703_Santa_Ana_Bus/mech_SantaAnaBus_2014233703.rvt
5/8/2024 11:15:09 AM

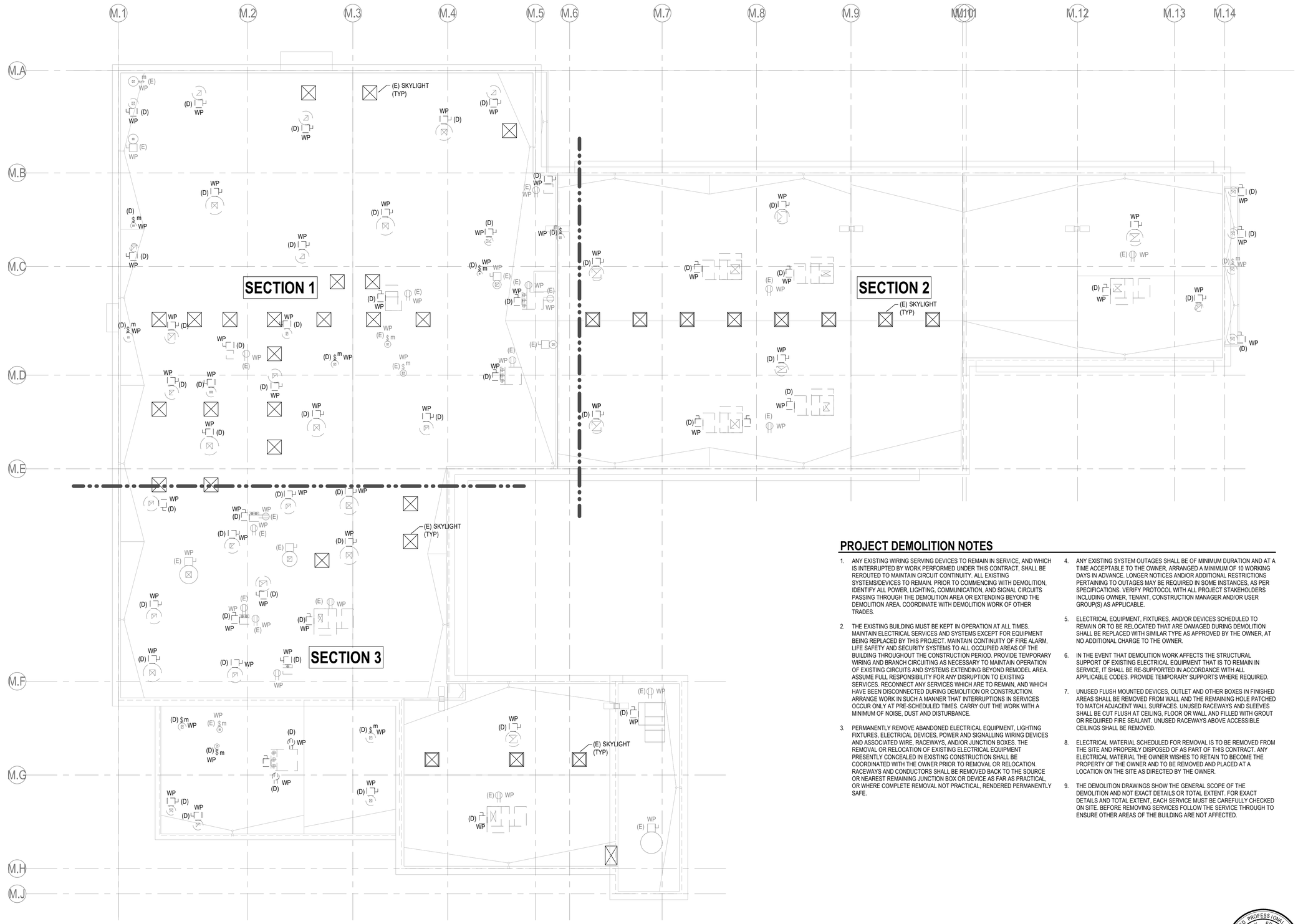

PROJECT DEMOLITION NOTES

1. ANY EXISTING WIRING SERVING DEVICES TO REMAIN IN SERVICE, AND WHICH IS INTERRUPTED BY WORK PERFORMED UNDER THIS CONTRACT, SHALL BE REROUTED TO MAINTAIN CIRCUIT CONTINUITY. ALL EXISTING SYSTEMS/DEVICES TO REMAIN. PRIOR TO COMMENCING WITH DEMOLITION, IDENTIFY ALL POWER, LIGHTING, COMMUNICATION, AND SIGNAL CIRCUITS PASSING THROUGH THE DEMOLITION AREA OR EXTENDING BEYOND THE DEMOLITION AREA. COORDINATE WITH DEMOLITION WORK OF OTHER TRADES.

2. THE EXISTING BUILDING MUST BE KEPT IN OPERATION AT ALL TIMES. MAINTAIN ELECTRICAL SERVICES AND SYSTEMS EXCEPT FOR EQUIPMENT BEING REPLACED BY THIS PROJECT. MAINTAIN CONTINUITY OF FIRE ALARM, LIFE SAFETY AND SECURITY SYSTEMS TO ALL OCCUPIED AREAS OF THE BUILDING THROUGHOUT THE CONSTRUCTION PERIOD. PROVIDE TEMPORARY WIRING AND BRANCH CIRCUITING AS NECESSARY TO MAINTAIN OPERATION OF EXISTING CIRCUITS AND SYSTEMS EXTENDING BEYOND REMODEL AREA. ASSUME FULL RESPONSIBILITY FOR ANY DISRUPTION TO EXISTING SERVICES. RECONNECT ANY SERVICES WHICH ARE TO REMAIN, AND WHICH HAVE BEEN DISCONNECTED DURING DEMOLITION OR CONSTRUCTION. ARRANGE WORK IN SUCH A MANNER THAT INTERRUPTIONS IN SERVICES OCCUR ONLY AT PRE-SCHEDULED TIMES. CARRY OUT THE WORK WITH A MINIMUM OF NOISE, DUST AND DISTURBANCE.

3. PERMANENTLY REMOVE ABANDONED ELECTRICAL EQUIPMENT, LIGHTING FIXTURES, ELECTRICAL DEVICES, POWER AND SIGNALLING WIRING DEVICES AND ASSOCIATED WIRE, RACEWAYS, AND/OR JUNCTION BOXES. THE REMOVAL OR RELOCATION OF EXISTING ELECTRICAL EQUIPMENT PRESENTLY CONCEALED IN EXISTING CONSTRUCTION SHALL BE COORDINATED WITH THE OWNER PRIOR TO REMOVAL OR RELOCATION. RACEWAYS AND CONDUCTORS SHALL BE REMOVED BACK TO THE SOURCE OR NEAREST REMAINING JUNCTION BOX OR DEVICE AS FAR AS PRACTICAL, OR WHERE COMPLETE REMOVAL NOT PRACTICAL, RENDERED PERMANENTLY SAFE.

4. ANY EXISTING SYSTEM OUTAGES SHALL BE OF MINIMUM DURATION AND AT A TIME ACCEPTABLE TO THE OWNER, ARRANGED A MINIMUM OF 10 WORKING DAYS IN ADVANCE. LONGER NOTICES AND/OR ADDITIONAL RESTRICTIONS PERTAINING TO OUTAGES MAY BE REQUIRED IN SOME INSTANCES, AS PER SPECIFICATIONS. VERIFY PROTOCOL WITH ALL PROJECT STAKEHOLDERS INCLUDING OWNER, TENANT, CONSTRUCTION MANAGER AND/OR USER GROUP(S) AS APPLICABLE.

5. ELECTRICAL EQUIPMENT, FIXTURES, AND/OR DEVICES SCHEDULED TO REMAIN OR TO BE RELOCATED THAT ARE DAMAGED DURING DEMOLITION SHALL BE REPLACED WITH SIMILAR TYPE AS APPROVED BY THE OWNER, AT NO ADDITIONAL CHARGE TO THE OWNER.

6. IN THE EVENT THAT DEMOLITION WORK AFFECTS THE STRUCTURAL SUPPORT OF EXISTING ELECTRICAL EQUIPMENT THAT IS TO REMAIN IN SERVICE, IT SHALL BE RE-SUPPORTED IN ACCORDANCE WITH ALL APPLICABLE CODES. PROVIDE TEMPORARY SUPPORTS WHERE REQUIRED.

7. UNUSED FLUSH MOUNTED DEVICES, OUTLET AND OTHER BOXES IN FINISHED AREAS SHALL BE REMOVED FROM WALL AND THE REMAINING HOLE PATCHED TO MATCH ADJACENT WALL SURFACES. UNUSED RACEWAYS AND SLEEVES SHALL BE CUT FLUSH AT CEILING, FLOOR OR WALL AND FILLED WITH GROUT OR REQUIRED FIRE SEALANT. UNUSED RACEWAYS ABOVE ACCESSIBLE CEILINGS SHALL BE REMOVED.

8. ELECTRICAL MATERIAL SCHEDULED FOR REMOVAL IS TO BE REMOVED FROM THE SITE AND PROPERLY DISPOSED OF AS PART OF THIS CONTRACT. ANY ELECTRICAL MATERIAL THE OWNER WISHES TO RETAIN TO BECOME THE PROPERTY OF THE OWNER AND TO BE REMOVED AND PLACED AT A LOCATION ON THE SITE AS DIRECTED BY THE OWNER.

9. THE DEMOLITION DRAWINGS SHOW THE GENERAL SCOPE OF THE DEMOLITION AND NOT EXACT DETAILS OR TOTAL EXTENT. FOR EXACT DETAILS AND TOTAL EXTENT, EACH SERVICE MUST BE CAREFULLY CHECKED ON SITE. BEFORE REMOVING SERVICES FOLLOW THE SERVICE THROUGH TO ENSURE OTHER AREAS OF THE BUILDING ARE NOT AFFECTED.

1 / ED-220 **MAINTENANCE BUILDING ELECTRICAL OVERALL DEMO ROOF PLAN**

1" = 20'-0"

N

REGISTERED PROFESSIONAL ENGINEER
PAUL A. ERICSON
No. 11219
exp.06/30/2025
ELECTRICAL
STATE OF CALIFORNIA

05-13-2024

IFB 4-2550 EXHIBIT B

Stantec
801 S. Figueroa Street, Suite 300
Los Angeles, CA 90017

Copyright Reserved
The contractor shall verify and be responsible for all dimensions. DO NOT scale the drawing - any errors or omissions shall be reported to Stantec without delay.
This drawing is the property of Stantec and shall not be reproduced in whole or in part. Reproduction or use for any purpose other than that authorized by Stantec is forbidden.

REVISION	DESCRIPTION	DATE
3	100% RESUBMITTAL	05/13/2024
2	100% CONSTRUCTION DRAWING SUBMITTAL	03/27/2024
1	90% UPDATED CONSTRUCTION SUBMITTAL	02/13/2024

REPLACEMENT OF MECHANICAL UNITS AT SANTA ANA BUS BASE
4301 W. MAC ARTHUR BLVD., SANTA ANA, CA

MAINTENANCE BUILDING ELECTRICAL OVERALL DEMO ROOF PLAN

JOB #:	
DESIGN BY:	IZ
DRAWN BY:	ERL
CHECKED BY:	PKE
DATE:	02/13/2024
SCALE:	As indicated
SHEET:	ED-220M

OCTA
ORANGE COUNTY TRANSPORTATION AUTHORITY
550 SOUTH MAIN STREET, ORANGE, CA

Autodesk Docs://2014233703_Santa_Ana_Bus/elec_SantaAnaBus_2014233703.rvt

5/8/2024 9:59:54 AM

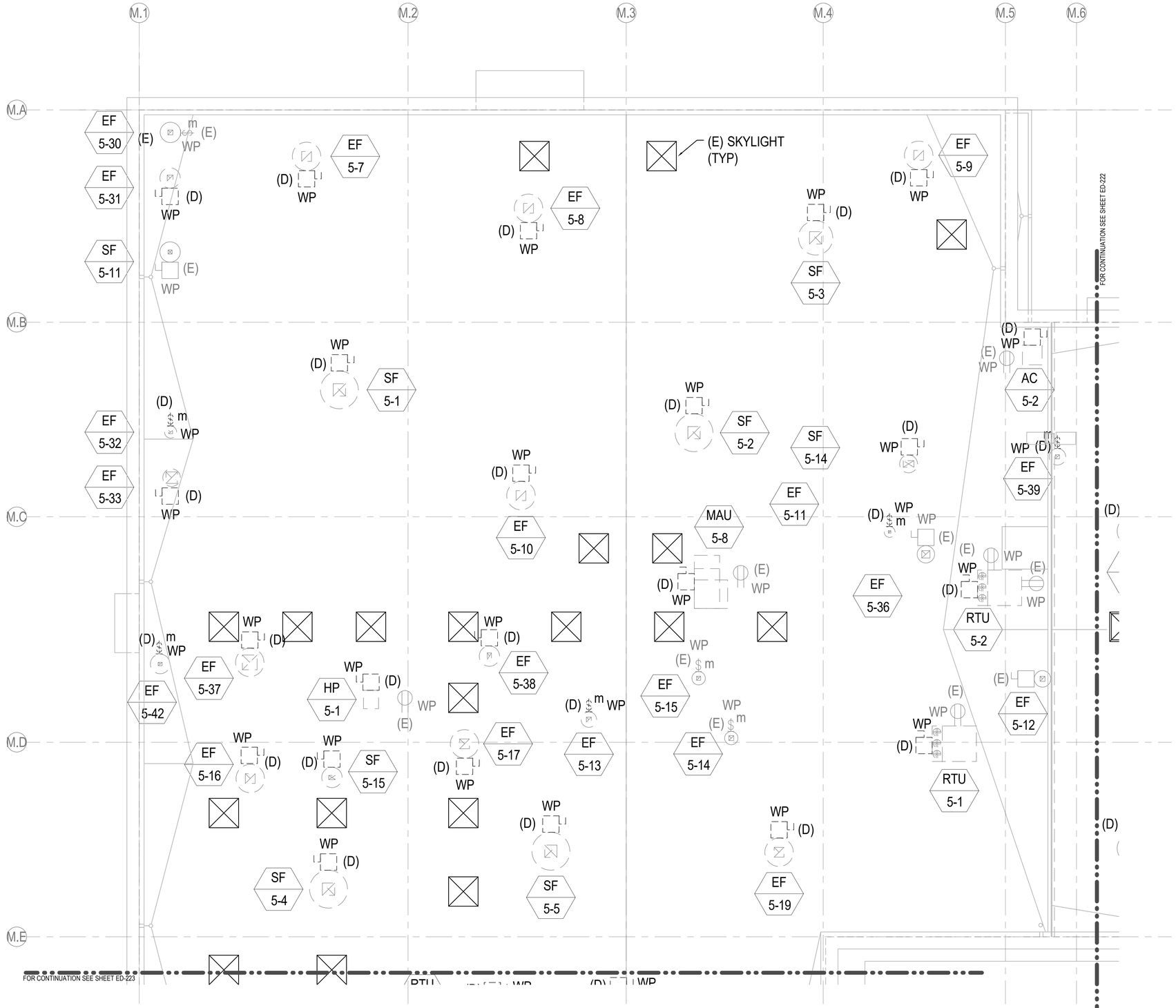

1 ED-221 **MAINTENANCE BUILDING SECTION ONE ELECTRICAL DEMO ROOF PLAN**

3/32" = 1'-0"

N

GENERAL NOTES

1. DISCONNECT EXISTING, TO BE REPLACED, MECHANICAL UNITS POWER CONNECTION FROM EXISTING ELECTRICAL PANELS, MOTOR CONTROL CENTERS, DISTRIBUTION PANELS. REMOVE EXISTING DISCONNECT SWITCHES AND EXISTING WIRES USED FOR POWER CONNECTION TO THE EXISTING MECHANICAL UNITS, SALVAGE AND RETURN TO OWNER. PROVIDE NEW DISCONNECTS FOR THE NEW MECHANICAL UNIT POWER CONNECTION. REFER TO E-200 SERIES SHEETS FOR ADDITIONAL INFORMATION.

(E) - EXISTING TO REMAIN, PROTECT IN PLACE.
(D) - EXISTING TO BE DEMOLISHED.
$M - TOGGLE SWITCH, MOTOR RATED.
□F - NON-FUSED SAFETY SWITCH
WP - WEATHER PROOF

PROJECT DEMOLITION NOTES

1. ANY EXISTING WIRING SERVING DEVICES TO REMAIN IN SERVICE, AND WHICH IS INTERRUPTED BY WORK PERFORMED UNDER THIS CONTRACT, SHALL BE REROUTED TO MAINTAIN CIRCUIT CONTINUITY. ALL EXISTING SYSTEMS/DEVICES TO REMAIN. PRIOR TO COMMENCING WITH DEMOLITION, IDENTIFY ALL POWER, LIGHTING, COMMUNICATION, AND SIGNAL CIRCUITS PASSING THROUGH THE DEMOLITION AREA OR EXTENDING BEYOND THE DEMOLITION AREA. COORDINATE WITH DEMOLITION WORK OF OTHER TRADES.

2. THE EXISTING BUILDING MUST BE KEPT IN OPERATION AT ALL TIMES. MAINTAIN ELECTRICAL SERVICES AND SYSTEMS EXCEPT FOR EQUIPMENT BEING REPLACED BY THIS PROJECT. MAINTAIN CONTINUITY OF FIRE ALARM, LIFE SAFETY AND SECURITY SYSTEMS TO ALL OCCUPIED AREAS OF THE BUILDING THROUGHOUT THE CONSTRUCTION PERIOD. PROVIDE TEMPORARY WIRING AND BRANCH CIRCUITING AS NECESSARY TO MAINTAIN OPERATION OF EXISTING CIRCUITS AND SYSTEMS EXTENDING BEYOND REMODEL AREA. ASSUME FULL RESPONSIBILITY FOR ANY DISRUPTION TO EXISTING SERVICES. RECONNECT ANY SERVICES WHICH ARE TO REMAIN, AND WHICH HAVE BEEN DISCONNECTED DURING DEMOLITION OR CONSTRUCTION. ARRANGE WORK IN SUCH A MANNER THAT INTERRUPTIONS IN SERVICES OCCUR ONLY AT PRE-SCHEDULED TIMES. CARRY OUT THE WORK WITH A MINIMUM OF NOISE, DUST AND DISTURBANCE.

3. PERMANENTLY REMOVE ABANDONED ELECTRICAL EQUIPMENT, LIGHTING FIXTURES, ELECTRICAL DEVICES, POWER AND SIGNALLING WIRING DEVICES AND ASSOCIATED WIRE, RACEWAYS, AND/OR JUNCTION BOXES. THE REMOVAL OR RELOCATION OF EXISTING ELECTRICAL EQUIPMENT PRESENTLY CONCEALED IN EXISTING CONSTRUCTION SHALL BE COORDINATED WITH THE OWNER PRIOR TO REMOVAL OR RELOCATION. RACEWAYS AND CONDUCTORS SHALL BE REMOVED BACK TO THE SOURCE OR NEAREST REMAINING JUNCTION BOX OR DEVICE AS FAR AS PRACTICAL, OR WHERE COMPLETE REMOVAL NOT PRACTICAL, RENDERED PERMANENTLY SAFE.

4. ANY EXISTING SYSTEM OUTAGES SHALL BE OF MINIMUM DURATION AND AT A TIME ACCEPTABLE TO THE OWNER, ARRANGED A MINIMUM OF 10 WORKING DAYS IN ADVANCE. LONGER NOTICES AND/OR ADDITIONAL RESTRICTIONS PERTAINING TO OUTAGES MAY BE REQUIRED IN SOME INSTANCES, AS PER SPECIFICATIONS. VERIFY PROTOCOL WITH ALL PROJECT STAKEHOLDERS INCLUDING OWNER, TENANT, CONSTRUCTION MANAGER AND/OR USER GROUP(S) AS APPLICABLE.

5. ELECTRICAL EQUIPMENT, FIXTURES, AND/OR DEVICES SCHEDULED TO REMAIN OR TO BE RELOCATED THAT ARE DAMAGED DURING DEMOLITION SHALL BE REPLACED WITH SIMILAR TYPE AS APPROVED BY THE OWNER, AT NO ADDITIONAL CHARGE TO THE OWNER.

6. IN THE EVENT THAT DEMOLITION WORK AFFECTS THE STRUCTURAL SUPPORT OF EXISTING ELECTRICAL EQUIPMENT THAT IS TO REMAIN IN SERVICE, IT SHALL BE RE-SUPPORTED IN ACCORDANCE WITH ALL APPLICABLE CODES. PROVIDE TEMPORARY SUPPORTS WHERE REQUIRED.

7. UNUSED FLUSH MOUNTED DEVICES, OUTLET AND OTHER BOXES IN FINISHED AREAS SHALL BE REMOVED FROM WALL AND THE REMAINING HOLE PATCHED TO MATCH ADJACENT WALL SURFACES. UNUSED RACEWAYS AND SLEEVES SHALL BE CUT FLUSH AT CEILING, FLOOR OR WALL AND FILLED WITH GROUT OR REQUIRED FIRE SEALANT. UNUSED RACEWAYS ABOVE ACCESSIBLE CEILINGS SHALL BE REMOVED.

8. ELECTRICAL MATERIAL SCHEDULED FOR REMOVAL IS TO BE REMOVED FROM THE SITE AND PROPERLY DISPOSED OF AS PART OF THIS CONTRACT. ANY ELECTRICAL MATERIAL THE OWNER WISHES TO RETAIN TO BECOME THE PROPERTY OF THE OWNER AND TO BE REMOVED AND PLACED AT A LOCATION ON THE SITE AS DIRECTED BY THE OWNER.

9. THE DEMOLITION DRAWINGS SHOW THE GENERAL SCOPE OF THE DEMOLITION AND NOT EXACT DETAILS OR TOTAL EXTENT. FOR EXACT DETAILS AND TOTAL EXTENT, EACH SERVICE MUST BE CAREFULLY CHECKED ON SITE. BEFORE REMOVING SERVICES FOLLOW THE SERVICE THROUGH TO ENSURE OTHER AREAS OF THE BUILDING ARE NOT AFFECTED.

REGISTERED PROFESSIONAL ENGINEER PAUL K. ERICSON No. 11219 exp. 06/30/2025 ELECTRICAL STATE OF CALIFORNIA

05-13-2024

Stantec
801 S. Figueroa Street, Suite 300
Los Angeles, CA 90017

Copyright Reserved
The contractor shall verify and be responsible for all dimensions. DO NOT scale the drawing - any errors or omissions shall be reported to Stantec without delay.
This drawing is the property of Stantec and shall not be reproduced or transmitted. Reproduction or use for any purpose other than that authorized by Stantec is forbidden.

REVISION	DESCRIPTION	DATE
3	100% RESUBMITTAL	05/13/2024
2	100% CONSTRUCTION DRAWING SUBMITTAL	03/27/2024
1	90% UPDATED CONSTRUCTION SUBMITTAL	02/13/2024

REPLACEMENT OF MECHANICAL UNITS AT SANTA ANA BUS BASE
4301 W. MAC ARTHUR BLVD., SANTA ANA, CA

MAINTENANCE BUILDING SECTION ONE ELECTRICAL DEMO ROOF PLAN

JOB #:	
DESIGN BY:	IZ
DRAWN BY:	ERL
CHECKED BY:	PKE
DATE:	02/13/2024
SCALE:	As indicated
SHEET:	ED-221M

OCTA
ORANGE COUNTY TRANSPORTATION AUTHORITY
550 SOUTH MAIN STREET, ORANGE, CA

Autodesk Docs://2014233703_Santa_Ana_Bus/elec_SantaAnaBus_2014233703.rvt
5/8/2024 9:59:55 AM

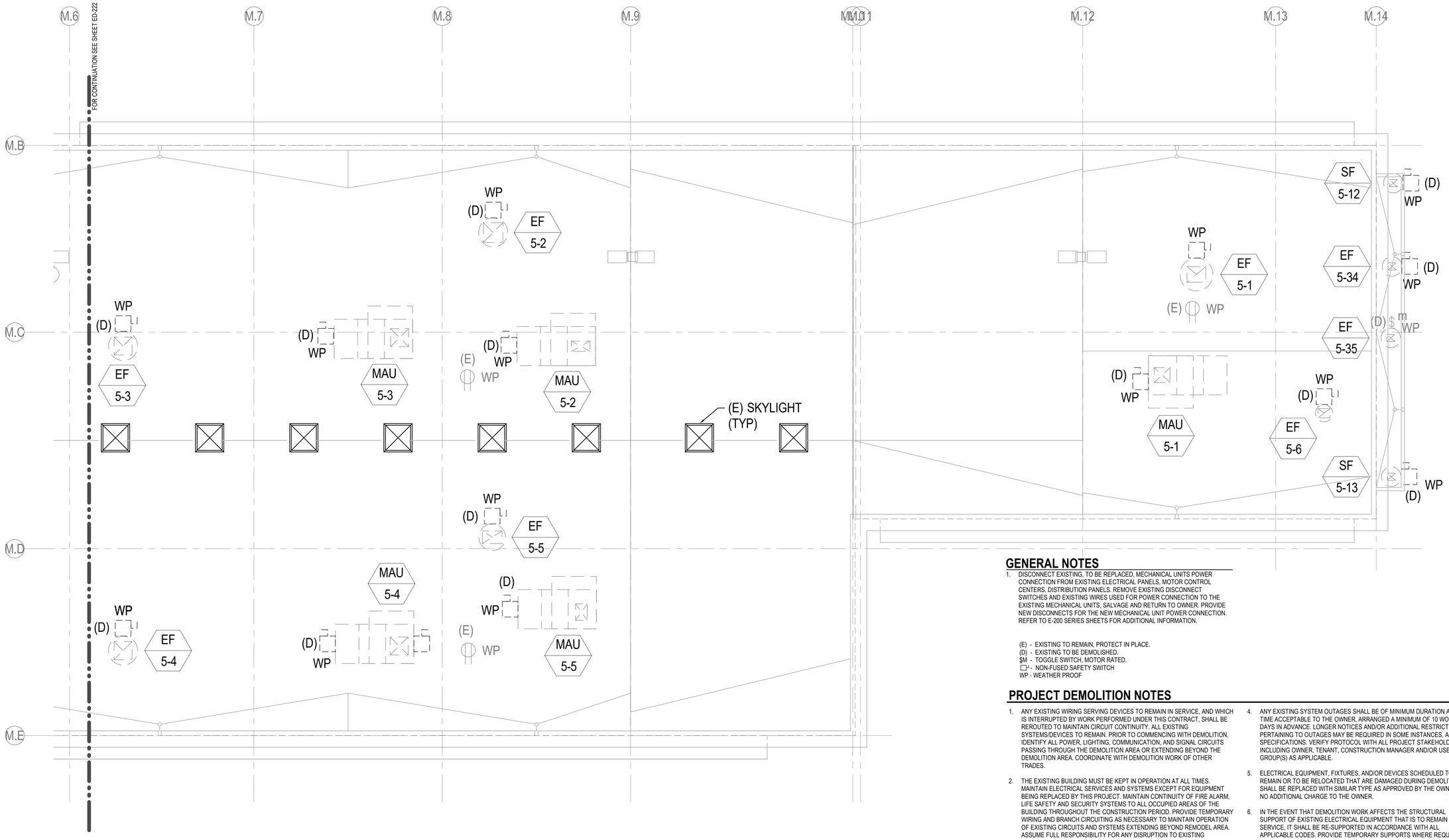

GENERAL NOTES

1. DISCONNECT EXISTING, TO BE REPLACED, MECHANICAL UNITS POWER CONNECTION FROM EXISTING ELECTRICAL PANELS, MOTOR CONTROL CENTERS, DISTRIBUTION PANELS. REMOVE EXISTING DISCONNECT SWITCHES AND EXISTING WIRES USED FOR POWER CONNECTION TO THE EXISTING MECHANICAL UNITS, SALVAGE AND RETURN TO OWNER. PROVIDE NEW DISCONNECTS FOR THE NEW MECHANICAL UNIT POWER CONNECTION. REFER TO E-200 SERIES SHEETS FOR ADDITIONAL INFORMATION.

(E) - EXISTING TO REMAIN, PROTECT IN PLACE.
(D) - EXISTING TO BE DEMOLISHED.
$M - TOGGLE SWITCH, MOTOR RATED.
□F - NON-FUSED SAFETY SWITCH
WP - WEATHER PROOF

PROJECT DEMOLITION NOTES

1. ANY EXISTING WIRING SERVING DEVICES TO REMAIN IN SERVICE, AND WHICH IS INTERRUPTED BY WORK PERFORMED UNDER THIS CONTRACT, SHALL BE REROUTED TO MAINTAIN CIRCUIT CONTINUITY. ALL EXISTING SYSTEMS/DEVICES TO REMAIN. PRIOR TO COMMENCING WITH DEMOLITION, IDENTIFY ALL POWER, LIGHTING, COMMUNICATION, AND SIGNAL CIRCUITS PASSING THROUGH THE DEMOLITION AREA OR EXTENDING BEYOND THE DEMOLITION AREA. COORDINATE WITH DEMOLITION WORK OF OTHER TRADES.

2. THE EXISTING BUILDING MUST BE KEPT IN OPERATION AT ALL TIMES. MAINTAIN ELECTRICAL SERVICES AND SYSTEMS EXCEPT FOR EQUIPMENT BEING REPLACED BY THIS PROJECT. MAINTAIN CONTINUITY OF FIRE ALARM, LIFE SAFETY AND SECURITY SYSTEMS TO ALL OCCUPIED AREAS OF THE BUILDING THROUGHOUT THE CONSTRUCTION PERIOD. PROVIDE TEMPORARY WIRING AND BRANCH CIRCUITING AS NECESSARY TO MAINTAIN OPERATION OF EXISTING CIRCUITS AND SYSTEMS EXTENDING BEYOND REMODEL AREA. ASSUME FULL RESPONSIBILITY FOR ANY DISRUPTION TO EXISTING SERVICES. RECONNECT ANY SERVICES WHICH ARE TO REMAIN, AND WHICH HAVE BEEN DISCONNECTED DURING DEMOLITION OR CONSTRUCTION. ARRANGE WORK IN SUCH A MANNER THAT INTERRUPTIONS IN SERVICES OCCUR ONLY AT PRE-SCHEDULED TIMES. CARRY OUT THE WORK WITH A MINIMUM OF NOISE, DUST AND DISTURBANCE.

3. PERMANENTLY REMOVE ABANDONED ELECTRICAL EQUIPMENT, LIGHTING FIXTURES, ELECTRICAL DEVICES, POWER AND SIGNALLING WIRING DEVICES AND ASSOCIATED WIRE, RACEWAYS, AND/OR JUNCTION BOXES. THE REMOVAL OR RELOCATION OF EXISTING ELECTRICAL EQUIPMENT PRESENTLY CONCEALED IN EXISTING CONSTRUCTION SHALL BE COORDINATED WITH THE OWNER PRIOR TO REMOVAL OR RELOCATION. RACEWAYS AND CONDUCTORS SHALL BE REMOVED BACK TO THE SOURCE OR NEAREST REMAINING JUNCTION BOX OR DEVICE AS FAR AS PRACTICAL, OR WHERE COMPLETE REMOVAL NOT PRACTICAL, RENDERED PERMANENTLY SAFE.

4. ANY EXISTING SYSTEM OUTAGES SHALL BE OF MINIMUM DURATION AND AT A TIME ACCEPTABLE TO THE OWNER, ARRANGED A MINIMUM OF 10 WORKING DAYS IN ADVANCE. LONGER NOTICES AND/OR ADDITIONAL RESTRICTIONS PERTAINING TO OUTAGES MAY BE REQUIRED IN SOME INSTANCES, AS PER SPECIFICATIONS. VERIFY PROTOCOL WITH ALL PROJECT STAKEHOLDERS INCLUDING OWNER, TENANT, CONSTRUCTION MANAGER AND/OR USER GROUP(S) AS APPLICABLE.

5. ELECTRICAL EQUIPMENT, FIXTURES, AND/OR DEVICES SCHEDULED TO REMAIN OR TO BE RELOCATED THAT ARE DAMAGED DURING DEMOLITION SHALL BE REPLACED WITH SIMILAR TYPE AS APPROVED BY THE OWNER, AT NO ADDITIONAL CHARGE TO THE OWNER.

6. IN THE EVENT THAT DEMOLITION WORK AFFECTS THE STRUCTURAL SUPPORT OF EXISTING ELECTRICAL EQUIPMENT THAT IS TO REMAIN IN SERVICE, IT SHALL BE RE-SUPPORTED IN ACCORDANCE WITH ALL APPLICABLE CODES. PROVIDE TEMPORARY SUPPORTS WHERE REQUIRED.

7. UNUSED FLUSH MOUNTED DEVICES, OUTLET AND OTHER BOXES IN FINISHED AREAS SHALL BE REMOVED FROM WALL AND THE REMAINING HOLE PATCHED TO MATCH ADJACENT WALL SURFACES. UNUSED RACEWAYS AND SLEEVES SHALL BE CUT FLUSH AT CEILING, FLOOR OR WALL AND FILLED WITH GROUT OR REQUIRED FIRE SEALANT. UNUSED RACEWAYS ABOVE ACCESSIBLE CEILINGS SHALL BE REMOVED.

8. ELECTRICAL MATERIAL SCHEDULED FOR REMOVAL IS TO BE REMOVED FROM THE SITE AND PROPERLY DISPOSED OF AS PART OF THIS CONTRACT. ANY ELECTRICAL MATERIAL THE OWNER WISHES TO RETAIN TO BECOME THE PROPERTY OF THE OWNER AND TO BE REMOVED AND PLACED AT A LOCATION ON THE SITE AS DIRECTED BY THE OWNER.

9. THE DEMOLITION DRAWINGS SHOW THE GENERAL SCOPE OF THE DEMOLITION AND NOT EXACT DETAILS OR TOTAL EXTENT. FOR EXACT DETAILS AND TOTAL EXTENT, EACH SERVICE MUST BE CAREFULLY CHECKED ON SITE. BEFORE REMOVING SERVICES FOLLOW THE SERVICE THROUGH TO ENSURE OTHER AREAS OF THE BUILDING ARE NOT AFFECTED.

REGISTERED PROFESSIONAL ENGINEER
PAUL K. ERICSON
No. 11219
exp.06/30/2025
ELECTRICAL
STATE OF CALIFORNIA

05-13-2024

1 ED-222 **MAINTENANCE BUILDING SECTION TWO ELECTRICAL DEMO ROOF PLAN**
3/32" = 1'-0"

N

Stantec
801 S. Figueroa Street, Suite 300
Los Angeles, CA 90017

Copyright Reserved
The contractor shall verify and be responsible for all dimensions. DO NOT scale the drawing - any errors or omissions shall be reported to Stantec without delay.
This drawing is the property of Stantec and shall not be reproduced in whole or in part. Reproduction or use for any purpose other than that authorized by Stantec is forbidden.

REVISION	DESCRIPTION	DATE
3	100% RESUBMITTAL	05/13/2024
2	100% CONSTRUCTION DRAWING SUBMITTAL	03/27/2024
1	90% UPDATED CONSTRUCTION SUBMITTAL	02/13/2024

REPLACEMENT OF MECHANICAL UNITS AT SANTA ANA BUS BASE
4301 W. MAC ARTHUR BLVD., SANTA ANA, CA

MAINTENANCE BUILDING SECTION TWO ELECTRICAL DEMO ROOF PLAN

JOB #:	
DESIGN BY:	IZ
DRAWN BY:	ERL
CHECKED BY:	PKE
DATE:	02/13/2024
SCALE:	As indicated
SHEET:	ED-222M

OCTA
ORANGE COUNTY TRANSPORTATION AUTHORITY
550 SOUTH MAIN STREET, ORANGE, CA

Autodesk Docs://2014233703_Santa_Ana_Bus/elec_SantaAnaBus_2014233703.rvt
5/8/2024 9:59:55 AM

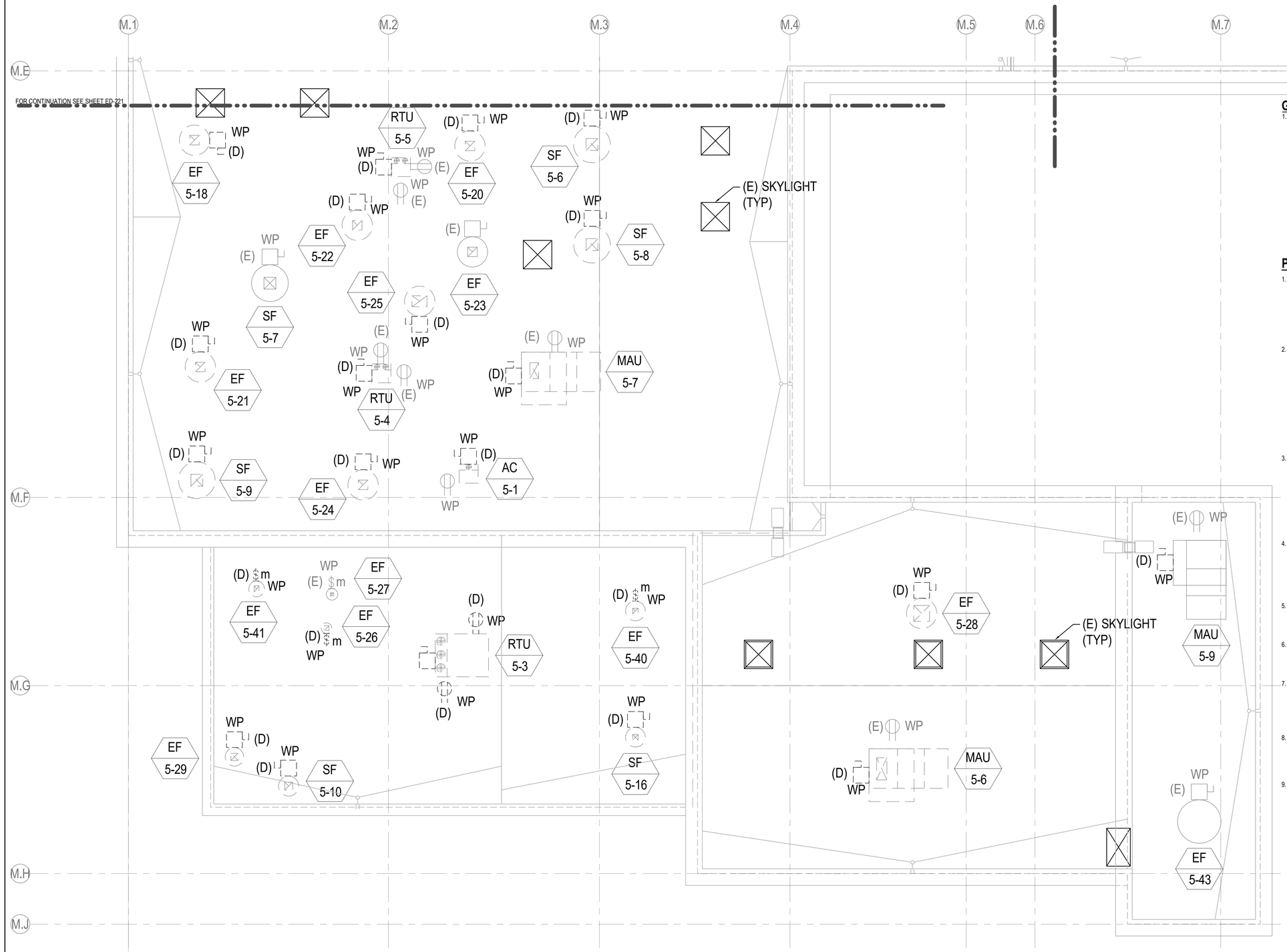

GENERAL NOTES

1. DISCONNECT EXISTING, TO BE REPLACED, MECHANICAL UNITS POWER CONNECTION FROM EXISTING ELECTRICAL PANELS, MOTOR CONTROL CENTERS, DISTRIBUTION PANELS. REMOVE EXISTING DISCONNECT SWITCHES AND EXISTING WIRES USED FOR POWER CONNECTION TO THE EXISTING MECHANICAL UNITS, SALVAGE AND RETURN TO OWNER. PROVIDE NEW DISCONNECTS FOR THE NEW MECHANICAL UNIT POWER CONNECTION. REFER TO E-200 SERIES SHEETS FOR ADDITIONAL INFORMATION.

(E) - EXISTING TO REMAIN, PROTECT IN PLACE.
(D) - EXISTING TO BE DEMOLISHED.
$M - TOGGLE SWITCH, MOTOR RATED.
□- NON-FUSED SAFETY SWITCH
WP - WEATHER PROOF

PROJECT DEMOLITION NOTES

1. ANY EXISTING WIRING SERVING DEVICES TO REMAIN IN SERVICE, AND WHICH IS INTERRUPTED BY WORK PERFORMED UNDER THIS CONTRACT, SHALL BE REROUTED TO MAINTAIN CIRCUIT CONTINUITY. ALL EXISTING SYSTEMS/DEVICES TO REMAIN. PRIOR TO COMMENCING WITH DEMOLITION, IDENTIFY ALL POWER, LIGHTING, COMMUNICATION, AND SIGNAL CIRCUITS PASSING THROUGH THE DEMOLITION AREA OR EXTENDING BEYOND THE DEMOLITION AREA. COORDINATE WITH DEMOLITION WORK OF OTHER TRADES.

2. THE EXISTING BUILDING MUST BE KEPT IN OPERATION AT ALL TIMES. MAINTAIN ELECTRICAL SERVICES AND SYSTEMS EXCEPT FOR EQUIPMENT BEING REPLACED BY THIS PROJECT. MAINTAIN CONTINUITY OF FIRE ALARM, LIFE SAFETY AND SECURITY SYSTEMS TO ALL OCCUPIED AREAS OF THE BUILDING THROUGHOUT THE CONSTRUCTION PERIOD. PROVIDE TEMPORARY WIRING AND BRANCH CIRCUITING AS NECESSARY TO MAINTAIN OPERATION OF EXISTING CIRCUITS AND SYSTEMS EXTENDING BEYOND REMODEL AREA. ASSUME FULL RESPONSIBILITY FOR ANY DISRUPTION TO EXISTING SERVICES. RECONNECT ANY SERVICES WHICH ARE TO REMAIN, AND WHICH HAVE BEEN DISCONNECTED DURING DEMOLITION OR CONSTRUCTION. ARRANGE WORK IN SUCH A MANNER THAT INTERRUPTIONS IN SERVICES OCCUR ONLY AT PRE-SCHEDULED TIMES. CARRY OUT THE WORK WITH A MINIMUM OF NOISE, DUST AND DISTURBANCE.

3. PERMANENTLY REMOVE ABANDONED ELECTRICAL EQUIPMENT, LIGHTING FIXTURES, ELECTRICAL DEVICES, POWER AND SIGNALLING WIRING DEVICES AND ASSOCIATED WIRE, RACEWAYS, AND/OR JUNCTION BOXES. THE REMOVAL OR RELOCATION OF EXISTING ELECTRICAL EQUIPMENT PRESENTLY CONCEALED IN EXISTING CONSTRUCTION SHALL BE COORDINATED WITH THE OWNER PRIOR TO REMOVAL OR RELOCATION. RACEWAYS AND CONDUCTORS SHALL BE REMOVED BACK TO THE SOURCE OR NEAREST REMAINING JUNCTION BOX OR DEVICE AS FAR AS PRACTICAL, OR WHERE COMPLETE REMOVAL NOT PRACTICAL, RENDERED PERMANENTLY SAFE.

4. ANY EXISTING SYSTEM OUTAGES SHALL BE OF MINIMUM DURATION AND AT A TIME ACCEPTABLE TO THE OWNER, ARRANGED A MINIMUM OF 10 WORKING DAYS IN ADVANCE. LONGER NOTICES AND/OR ADDITIONAL RESTRICTIONS PERTAINING TO OUTAGES MAY BE REQUIRED IN SOME INSTANCES, AS PER SPECIFICATIONS. VERIFY PROTOCOL WITH ALL PROJECT STAKEHOLDERS INCLUDING OWNER, TENANT, CONSTRUCTION MANAGER AND/OR USER GROUP(S) AS APPLICABLE.

5. ELECTRICAL EQUIPMENT, FIXTURES, AND/OR DEVICES SCHEDULED TO REMAIN OR TO BE RELOCATED THAT ARE DAMAGED DURING DEMOLITION SHALL BE REPLACED WITH SIMILAR TYPE AS APPROVED BY THE OWNER, AT NO ADDITIONAL CHARGE TO THE OWNER.

6. IN THE EVENT THAT DEMOLITION WORK AFFECTS THE STRUCTURAL SUPPORT OF EXISTING ELECTRICAL EQUIPMENT THAT IS TO REMAIN IN SERVICE, IT SHALL BE RE-SUPPORTED IN ACCORDANCE WITH ALL APPLICABLE CODES. PROVIDE TEMPORARY SUPPORTS WHERE REQUIRED.

7. UNUSED FLUSH MOUNTED DEVICES, OUTLET AND OTHER BOXES IN FINISHED AREAS SHALL BE REMOVED FROM WALL AND THE REMAINING HOLE PATCHED TO MATCH ADJACENT WALL SURFACES. UNUSED RACEWAYS AND SLEEVES SHALL BE CUT FLUSH AT CEILING, FLOOR OR WALL AND FILLED WITH GROUT OR REQUIRED FIRE SEALANT. UNUSED RACEWAYS ABOVE ACCESSIBLE CEILINGS SHALL BE REMOVED.

8. ELECTRICAL MATERIAL SCHEDULED FOR REMOVAL IS TO BE REMOVED FROM THE SITE AND PROPERLY DISPOSED OF AS PART OF THIS CONTRACT. ANY ELECTRICAL MATERIAL THE OWNER WISHES TO RETAIN TO BECOME THE PROPERTY OF THE OWNER AND TO BE REMOVED AND PLACED AT A LOCATION ON THE SITE AS DIRECTED BY THE OWNER.

9. THE DEMOLITION DRAWINGS SHOW THE GENERAL SCOPE OF THE DEMOLITION AND NOT EXACT DETAILS OR TOTAL EXTENT. FOR EXACT DETAILS AND TOTAL EXTENT, EACH SERVICE MUST BE CAREFULLY CHECKED ON SITE. BEFORE REMOVING SERVICES FOLLOW THE SERVICE THROUGH TO ENSURE OTHER AREAS OF THE BUILDING ARE NOT AFFECTED.

1 ED-223 **MAINTENANCE BUILDING SECTION THREE ELECTRICAL DEMO ROOF PLAN**
3/32" = 1'-0"

N

REGISTERED PROFESSIONAL ENGINEER PAUL K. ERICSON No. 11219 exp.06/30/2025 ELECTRICAL STATE OF CALIFORNIA
05-13-2024

Stantec
801 S. Figueroa Street, Suite 300
Los Angeles, CA 90017

Copyright Reserved
The contractor shall verify and be responsible for all dimensions. DO NOT scale the drawing; any errors or omissions shall be reported to Stantec without delay.
This drawing is the property of Stantec and must be returned on request. Reproduction or use for any purpose other than that authorized by Stantec is forbidden.

REVISION	DESCRIPTION	DATE
3	100% RESUBMITTAL	05/13/2024
2	100% CONSTRUCTION DRAWING SUBMITTAL	03/27/2024
1	90% UPDATED CONSTRUCTION SUBMITTAL	02/13/2024

REPLACEMENT OF MECHANICAL UNITS AT SANTA ANA BUS BASE
4301 W. MAC ARTHUR BLVD., SANTA ANA, CA

MAINTENANCE BUILDING SECTION THREE ELECTRICAL DEMO ROOF PLAN

JOB #:	
DESIGN BY:	IZ
DRAWN BY:	ERL
CHECKED BY:	PKE
DATE:	02/13/2024
SCALE:	As indicated
SHEET:	ED-223M

OCTA
ORANGE COUNTY TRANSPORTATION AUTHORITY
550 SOUTH MAIN STREET, ORANGE, CA

Autodesk Docs://2014233703_Santa_Ana_Bus/elec_SantaAnaBus_2014233703.rvt
5/8/2024 9:59:55 AM

SPECIAL INSPECTION AND TEST REQUIREMENTS				
TYPE		FREQUENCY	REQUIRED INSPECTIONS AND/OR TESTS	REFERENCES CODES/STANDARDS
NONSTRUCTURAL COMPONENTS				
1. PLUMBING, MECHANICAL, AND ELECTRICAL COMPONENTS	☑	PERIODIC	INSTALLATION OF MECHANICAL AND ELECTRICAL EQUIPMENT, INCLUDING DUCTWORK, PIPING SYSTEMS AND THEIR STRUCTURAL SUPPORTS, WHERE AUTOMATIC FIRE SPRINKLER SYSTEMS ARE INSTALLED TO VERIFY ONE OF THE FOLLOWING REQUIREMENTS (SDC C,D,E,F): • MINIMUM CLEARANCES HAVE BEEN PROVIDED AS REQUIRED BY ASCE-7 SECTION 13.2.3 • A NOMINAL CLEARANCE OF NOT LESS THAN 3 INCHES HAS BEEN PROVIDED BETWEEN FIRE PROTECTION SPRIKLER SYSTEM DROPS AND SPRIGS AND: STRUCTURAL MEMBERS NOT USED COLLECTIVELY OR INDEPENDENTLY TO SUPPORT THE SPRINKERS; EQUIPMENT ATTACHED TO THE BUILDING STRUCTURE; AND OTHER SYSTEMS' PIPING	CBC 1705.12.6
	☑	PERIODIC	DESIGNATED SEISMIC SYSTEMS - EXAMINE DESIGNATED SEISMIC SYSTEMS REQUIRING SEISMIC QUALIFICATION IN ACCORDANCE WITH ASCE 7 SECTION 13.2.2 AND VERIFY THAT THE LABEL, ANCHORAGE AND MOUNTING CONFORM TO THE CERTIFICATE OF COMPLIANCE (SDC C,D,E,F): • ACTIVE MECHANICAL AND ELECTRICAL EQUIPMENT THAT MUST REMAIN OPERABLE FOLLOWING THE DESIGN EARTHQUAKE GROUND MOTION • COMPONENTS WITH HAZARDOUS SUBSTANCES AND ASSIGNED A COMPONENT IMPORTANCE FACTOR, I_p OF 1.5.	CBC 1705.12.4

STATEMENT OF SPECIAL INSPECTIONS

INSPECTION AND TESTING REQUIREMENTS ON THIS SHEET ARE IN ACCORDANCE WITH SECTION 1705 OF THE CALIFORNIA BUILDING CODE (CBC) AND HAVE BEEN IDENTIFIED AS A STATEMENT OF SPECIAL INSPECTIONS AS REQUIRED BY CBC SECTION 1704.3. THE OWNER OF THE OWNER'S AUTHORIZED AGENT, OTHER THAN THE CONTRACTOR, SHALL EMPLOY ONE OR MORE APPROVED AGENCIES TO PROVIDE THE SPECIAL INSPECTIONS AND TESTS DURING CONSTRUCTION AS REQUIRED BY CBC SECTION 1705 AND IDENTIFY THE APPROVED AGENCIES TO THE BUILDING OFFICIAL. THESE SPECIAL INSPECTIONS AND TESTS ARE IN ADDITION TO THE INSPECTIONS BY THE BUILDING OFFICIAL THAT ARE IDENTIFIED IN CBC SECTION 110. SPECIAL INSPECTORS SHALL BE QUALIFIED IN ACCORDANCE WITH CBC SECTION 1704.2.1, AND ALL OTHER APPLICABLE SECTIONS AND STANDARDS.

DEFINITIONS

SPECIAL INSPECTION	INSPECTION OF CONSTRUCTION REQUIRING THE EXPERTISE OF AN APPROVED SPECIAL INSPECTOR IN ORDER TO ENSURE COMPLIANCE WITH THE BUILDING CODE AND THE APPROVED CONSTRUCTION DOCUMENTS.
SPECIAL INSPECTOR	A QUALIFIED PERSON EMPLOYED OR RETAINED BY AN APPROVED AGENCY AND APPROVED BY THE BUILDING OFFICIAL AS HAVING THE COMPETENCE NECESSARY TO INSPECT A PARTICULAR TYPE OF CONSTRUCTION REQUIRING SPECIAL INSPECTION.
PERIODIC	SPECIAL INSPECTION BY THE SPECIAL INSPECTOR WHO IS INTERMITTENTLY PRESENT WHERE THE WORK HAS BEEN OR IS BEING PERFORMED AND AT THE COMPLETION OF WORK.
CONTINUOUS	SPECIAL INSPECTION BY THE SPECIAL INSPECTOR WHO IS PRESENT CONTINUOUSLY WHEN AND WHERE THE WORK TO BE INSPECTED IS BEING PERFORMED
☑	INDICATES SPECIAL INSPECTION OF ITEM MAY BE REQUIRED FOR THE WORK DEFINED IN THE CONSTRUCTION DOCUMENTS FOR THIS PROJECT.

GENERAL NOTES

I. GENERAL NOTES:

1. ALL STRUCTURAL WORK SHALL CONFORM TO THE DRAWINGS, THE PROJECT SPECIFICATIONS, ALL DRAWING NOTES, AND THE 2022 CALIFORNIA BUILDING CODE (CBC).
2. ALL APPLICABLE REFERENCE STANDARDS, AS MODIFIED BY THE BUILDING CODE, INCLUDE:
   A. ASCE/SEI 7-16: MINIMUM DESIGN LOADS FOR BUILDINGS AND OTHER STRUCTURES
   B. AWS D1.1: STRUCTURAL WELDING CODE - STEEL
3. THE SCOPE OF WORK IS NOT SOLELY DEFINED BY THESE DOCUMENTS.
4. TYPICAL DETAILS APPLY THROUGHOUT THE PROJECT, EVEN IF NOT SPECIFICALLY REFERENCED IN PLANS OR DETAILS. DETAILS OF CONSTRUCTION NOT FULLY SHOWN OR NOTED ON THE DRAWINGS NOR CALLED OUT IN THE SPECIFICATIONS SHALL BE OF THE SAME SIZE AND CHARACTER AS FOR SIMILAR CONDITIONS WHICH ARE SHOWN AND NOTED.
5. ALL FORCES INDICATED IN THE STRUCTURAL DRAWINGS ARE SERVICE LOADS AS DEFINED BY ASCE-7, UNLESS NOTED OTHERWISE.
6. DO NOT USE SCALED DIMENSIONS; USE ONLY WRITTEN DIMENSIONS. WHERE NO DIMENSION IS PROVIDED, CONSULT THE ARCHITECT FOR CLARIFICATIONS BEFORE PROCEEDING WITH WORK.
7. THE CONTRACTOR SHALL BE SOLELY RESPONSIBLE FOR THE CONDITIONS OF THE JOB SITE INCLUDING SAFETY OF PERSONS AND PROPERTY AND THE MEANS AND METHODS OF CONSTRUCTION.
8. ALL STRUCTURAL WORK SHALL BE COORDINATED WITH ARCHITECTURAL, MECHANICAL, ELECTRICAL, PLUMBING, ETC. REQUIREMENTS. REFER TO ARCHITECTURAL DRAWINGS FOR DIMENSIONS NOT SHOWN ON PLAN. DISCREPANCIES AND/OR INTERFERENCES SHALL BE REPORTED TO THE ARCHITECT IMMEDIATELY.
9. OPENINGS SHALL NOT BE MADE IN ANY STRUCTURAL MEMBER UNLESS SPECIFICALLY SHOWN ON THE STRUCTURAL DRAWINGS OR APPROVED BY THE STRUCTURAL ENGINEER.
10. DEFICIENT WORK AND WORK NOT IN CONFORMANCE WITH THE CONTRACT DOCUMENTS AS IDENTIFIED BY THE ARCHITECT OR INSPECTOR SHALL BE REPAIRED AT THE CONTRACTOR'S EXPENSE. CONTRACTOR SHALL COMPENSATE OWNER FOR SERVICES ARISING FROM DEFICIENT WORK.
11. CONSTRUCTION MATERIALS SHALL BE SPREAD OUT WHEN PLACED ON FRAMED FLOORS OR ROOFS. THE CONSTRUCTION MATERIAL LOAD SHALL NOT EXCEED THE DESIGN LIVE LOAD PER SQUARE FOOT. CONTRACTOR SHALL BE RESPONSIBLE FOR SHORING WHERE STRUCTURE IS NOT COMPLETE OR HAS NOT ATTAINED DESIGN STRENGTH.

II. DESIGN LOADS:

1. WIND LOAD:

A. ULTIMATE DESIGN BASIC WIND SPEED Vult	95 MPH
B. WIND EXPSOURE CATEGORY:	C
C. INTERNAL PRESSURE COEFFICIENT (GCPi):	+/- 0.18
D. GUST EFFECT FACTOR (G):	0.85

2. SEISMIC LOAD:

A. SITE CLASS:	D (DEFAULT)
B. RISK CATEGORY:	II
C. SEISMIC IMPORTANCE FACTOR (I_p):	1.00
D. MAPPED SPECTRAL RESPONSE:	
a. SHORT PERIOD S_S:	1.32g
b. 1-SECOND PERIOD S_1:	0.48 g
E. DESIGN SPECTRAL RESPONSE (5% DAMPED):	
a. SHORT PERIOD S_{DS}:	1.06 g
F. SEISMIC DESIGN CATEGORY:	D

III. EXISTING STRUCTURE & EXISTING CONDITIONS

1. CONTRACTOR IS TO NOTIFY ENGINEER OF QUESTIONABLE EXISTING STRUCTURAL COMPONENTS (MASONRY WALLS, STEEL BEAMS & LINTEL, EXPOSED FOUNDATIONS, ETC.) AND FRAMING CONNECTIONS WHEN ENCOUNTERED.
2. CONTRACTOR TO VERIFY EXACT LOCATION OF ALL EXISTING STRUCTURAL COMPONENTS THAT WILL BE CONNECTED TO NEW FRAMING PRIOR TO STEEL FABRICATION. IT IS THE CONTRACTOR'S RESPONSIBILITY TO VERIFY ALL EXISTING DIMENSIONS AND COORDINATE THESE DIMENSIONS WITH THE STEEL FABRICATOR PRIOR TO STEEL FABRICATION TO ENSURE ARCHITECTURAL AND STRUCTURAL DESIGN CONCEPT. CONTRACTOR SHALL NOTIFY ARCHITECT AND/OR ENGINEER OF DISCREPANCIES.

IV. MECHANICAL/ELECTRICAL/PLUMBING SYSTEM SUPPORTS

1. THE CONTRACTOR SHALL DESIGN AND SUPPLY ALL ADDITIONAL MISCELLANEOUS METALS AND SYSTEM SUPPORT COMPONENTS THAT ARE NECESSARY TO SUPPORT ALL MECHANICAL, ELECTRICAL (TELECOM, AUDIO VISUAL, ETC.) AND PLUMBING/FIRE PROTECTION SYSTEMS. SUCH METALS AND SUPPORT COMPONENTS AND THEIR CONNECTIONS SHALL BE PROVIDED AS NECESSARY TO DIRECTLY AND CONCENTRICALLY IMPOSE LOADS ON THE PRIMARY STRUCTURE. STEEL ROOF DECK SHALL NOT DIRECTLY SUPPORT THESE SYSTEMS. THE CONNECTIONS TO THE PRIMARY STRUCTURE ARE SUBJECT TO THE REQUIREMENTS OF THE MISCELLANEOUS METALS SECTION ABOVE.

V. QUALITY ASSURANCE AND SPECIAL INSPECTIONS

1. OWNER WILL ENGAGE AN INDEPENDENT TESTING AGENCY TO PERFORM THE TESTS AND INSPECTIONS SHOWN ON THE 'STRUCTURAL TESTING AND INSPECTIONS' SHEET. IT IS THE CONTRACTOR'S RESPONSIBILITY TO PROVIDE ADEQUATE PRIOR NOTICE TO ALLOW FOR COMPLETION OF THESE REQUIREMENTS.

VI. STRUCTURAL LUMBER

1. ALL STRUCTURAL SAWN LUMBER SHALL BE DOUGLAS FIR LARCH AS GRADED BY THE WWPA OR WCLIB WITH THE FOLLOWING MINIMUM GRADES, UNLESS NOTED OTHERWISE:
   A. 4X AND LARGER BEAMS OR JOISTS, CONCEALED: NO. 1
   B. 4X AND LARGER BEAMS OR JOISTS, EXPOSED: SELECT STRUCTURAL
2. ALL STRUCTURAL COMPOSITE LUMBER (SCL) OR ENGINEERED LUMBER SHALL BE AS FOLLOWS:
   A. I-JOISTS: TJI JOISTS MANUFACTURED BY WEYERHAUSER (ESR-1153)
   B. LSL: TIMBERSTRAND LSL MANUFACTURED BY WEYERHAUSER (ESR-1387)
   C. LVL: MICROLLAM LVL (2.0E) MANUFACTURED BY WEYERHAUSER (ESR-1387)
   D. PSL: PARALLAM PSL (2.0E) MANUFACTURED BY WEYERHAUSER (ESR-1387)
   E. SUBSTITUTION OF PRODUCTS LISTED ABOVE SHALL BE SUBMITTED TO ENGINEER FOR REVIEW AND APPROVAL.
3. ALL STRUCTURAL TIMBER FRAMING SHALL HAVE A MAXIMUM MOISTURE CONTENT OF 19% AT THE TIME OF ENCLOSURE, REGARDLESS OF THE MOISTURE CONTENT AT THE TIME OF MANUFACTURE. TIMBER FLOOR FRAMING, INCLUDING JOISTS AND BEAMS, WITH MORE THAN 2 FRAMED LEVELS ABOVE THEM SHALL BE DESIGNATED AS 'S-DRY' OR 'MC15' AND HAVE A MAXIMUM MOISTURE CONTENT OF 15% AT THE TIME OF ENCLOSURE.
4. ALL LUMBER LOCATED IN DIRECT CONTACT WITH CONCRETE OR MASONRY INCLUDING BUT NOT LIMITED TO SILL PLATES, NAILERS, AND LEDGERS SHALL BE PRESSURE TREATED DOUGLAS FIR.
5. ALL HARDWARE SHALL BE SIMPSON STRONG-TIE CO INSTALLED PER MANUFACTURERS RECOMMENDATIONS. SUBSTITUTION OF EQUIVALENT HARDWARE FROM AN ALTERNATE MANUFACTURER SHALL BE SUBMITTED TO THE ENGINEER FOR REVIEW AND APPROVAL.
6. MINIMUM FASTENING AND NAILING OF TIMBER COMPONENTS SHALL BE IN ACCORDANCE WITH CBC TABLE 2304.10.1.
7. FASTENERS SHALL BE PROVIDED NEW AND WITHOUT EXCESSIVE RUST. ALL FASTENERS EXPOSED TO WEATHER SHALL BE GALVANIZED.
8. ALL METAL FASTENERS IN CONTACT WITH PRESERVATIVE-TREATED LUMBER SHALL BE STAINLESS STEEL OR OTHERWISE CERTIFIED BY THE MANUFACTURER TO RESIST CORROSION CAUSED BY THE SPECIFIC TREATMENT APPLIED TO THE WOOD.
9. DO NOT CUT, BORE, COUNTERSINK OR NOTCH WOOD MEMBERS EXCEPT WHERE EXPLICITY SHOWN IN THE DETAILS.
10. BOLTS AND LAG SCREWS:
   A. BOLTS AND LAG SCREWS SHALL CONFORM TO ASTM A307 AND MEET THE DIMENSIONAL STANDARDS OF ANSI/ASME B18.2.1.
   B. HOLES FOR BOLTS SHALL BE A MINIMUM 1/32" TO A MAXIMUM OF 1/16" LARGER THAN THE BOLT DIAMETER.
   C. BOLTS SHALL BE ACCURATELY ALIGNED IN MAIN MEMBERS AND SIDE PLATES. BOLTS SHALL NOT BE FORCIBLY DRIVEN INTO PLACE.
   D. BORED LEAD HOLES FOR LAG SCREWS SHALL BE 40-70% OF THE SHANK DIAMETER AT THE THREADED PORTION OF THE SCREW, AND THE SAME DIAMETER AS THE SHANK AT THE SHANK.
   E. LAG SCREWS SHALL BE TURNED, NOT DRIVEN INTO PLACE.
   F. ALL BOLTS, NUTS, AND LAG SCREWS SHALL BE PROVIDED WITH FLAT OR MALLEABLE WASHERS WHERE BEARING AGAINST DIRECTLY AGAINST WOOD.
   G. ALL BOLTS AND LAG SCREWS SHALL BE TIGHTENED UPON INSTALLATION AND RE-TIGHTENED BEFORE CLOSING IN OR AT COMPLETION OF JOB.

VII. STRUCTURAL STEEL:

1. STRUCTURAL STEEL SHALL BE DETAILED, FABRICATED AND ERECTED IN ACCORDANCE WITH AISC 360.
2. UNLESS OTHERWISE NOTED, ALL STRUCTURAL STEEL SHALL CONFORM TO THE FOLLOWING:
   A. ANGLES AND CHANNELS: ASTM A36 (FY = 36 KSI)
   B. PLATES, BARS: ASTM A36 (FY = 36 KSI)
3. FIELD CUTTING OR DRILLING STRUCTURAL STEEL IS STRICTLY PROHIBITED WITHOUT PRIOR REVIEW AND APPROVAL BY SEOR. ALL HOLES AND CUTS SHALL BE PERFORMED IN THE SHOP AS IDENTIFIED ON STRUCTURAL DRAWINGS OR SHOP DRAWINGS.
4. WELDED CONNECTIONS:
   A. ALL WELDS SHALL CONFORM TO AWS D1.1. WELDING ELECTRODES SHALL BE CLASS E70XX.
   B. MINIMUM FILLET WELD SIZE SHALL BE 1/4 " UNLESS NOTED OTHERWISE.
   C. WELDING SHALL BE PERFORMED BY QUALIFIED WELDERS, REFER TO SPECIFICATIONS.
   D. WHERE FIELD WELDING IS SPECIFICALLY NOTED, THE DESIGNATION IS GIVEN AS A SUGGESTED CONSTRUCTION PROCEDURE ONLY. THE CONTRACTOR SHALL DETERMINE SUITABILITY OF SHOP OR FIELD WELDING FOR ALL CONDITIONS. ALL BOLTED CONNECTIONS MUST BE IN ADDITION TO THESE REQUIREMENTS.
   E. WELD LENGTHS SPECIFIED ON PLANS ARE THE NET EFFECTIVE LENGTH. WELD SIZE SHALL BE AISC MINIMUM UON AS LARGER WELD.
   F. ALL CJP WELDS SHALL BE MADE WITH FILLER METAL WITH A MINIMUM CVN TOUGHNESS OF 20 FT-LBS AT -20 DEGREES F. NDT AND INSPECTIONS PER THE 'STRUCTURAL TESTING AND INSPECTIONS' SHEET.
   G. CONTRACTOR TO PROVIDE WELDING PROCEDURE SPECIFICATION FOR REVIEW AND APPROVAL BY SEOR.
5. STEEL FINISHES SHALL BE AS FOLLOWS, UNLESS NOTED OTHERWISE IN ARCHITECTURAL SPECIFICATIONS:
   A. INTERIOR TO RECEIVE ENCASEMENT OR SPRAY-ON FIREPROOFING: NONE
   B. INTERIOR TO RECEIVE FINISH PAINT: REFER TO SPECIFICATIONS
   C. EXTERIOR: HOT-DIPPED GALVANIZED COATING CONFORMING TO ASTM A123 OR HIGH-PERFORMANCE COATING AT CONDITIONS AS IDENTIFIED IN SPECIFICATIONS.
6. SCREWS SHALL BE SELF-TAPPING AND COMPLY WITH ASTM C1513.

ABBREVIATIONS

#	POUND
&	AND
(N)	NEW
@	AT
AB	ANCHOR BOLT
ACS	ALL COMMON SIDES
ADDL	ADDITIONAL
AESS	ARCHITECTURALLY EXPOSED STRUCTURAL STEEL
ALT	ALTERNATE
ARCH, ARCH'L	ARCHITECT, ARCHITECTURAL
BL	BRICKLEDGE
BLDG	BUILDING
BLKG	BLOCKING
BM	BEAM
BN	BOUNDARY NAILING
BO	BOTTOM OF
BOB	BOTTOM OF BEAM
BOD	BOTTOM OF DECK
BOS	BOTTOM OF STEEL
BOT, BOTT	BOTTOM
BP	BASE PLATE
BRBF	BUCKLING RESTRAINED BRACED FRAME
BRG	BEARING
BTWN	BETWEEN
C	CHANNEL
CB	CONCRETE BEAM
CC	CARRIED COLUMN
CEN	CENTER
CFMF	COLD-FORMED METAL FRAMING
CIP	CAST IN PLACE
CJ	CONTROL JOINT
CJP	COMPLETE JOINT PENETRATION
CL	CENTERLINE
CLR	CLEAR
CMU	CONCRETE MASONRY UNIT
COL	COLUMN
CONC	CONCRETE
CONN	CONNECT, CONNECTION
CONT	CONTINUOUS
CTR	CENTERED
CWI	CERTIFIED WELDING INSPECTOR
D, DIA	DIAMETER
DBA	DEFORMED BAR ANCHOR
DBL	DOUBLE
DEF	DEFORMED, DEFINITION
DEFL	DEFLECTION
DET, DTL	DETAIL
DIAG	DIAGONAL
DN	DOWN
DWG	DRAWING
EA	EACH
EF	EACH FACE
EJ	EXPANSION JOINT
EL	ELEVATION
ELEV	ELEVATOR
EN	EDGE NAILING
EOR	ENGINEER OF RECORD
EOS	EDGE OF SLAB
EQ	EQUAL
EQ SPA	EQUAL SPACE
ES	EACH SIDE
EW	EACH WAY
EXIST, (E)	EXISTING
EXT	EXTERIOR
FD	FLOOR DRAIN
FDN, FNDN	FOUNDATION
FF EL	FINISH FLOOR ELEVATION
FN	FIELD NAILING
FOA	FACE OF ANGLE
FOC	FACE OF CONCRETE
FOM	FACE OF MASONRY
FT	FEET
FTG	FOOTING
Fy	YIELD STRESS
GA	GAGE, GAUGE
GALV	GALVANIZED
GB	GRADE BEAM
GLB	GLUED-LAMINATED BEAM
GT	GIRDER TRUSS
H, HORIZ	HORIZONTAL
HC	HOLLOW CORE
HI	HIGH
HK	HOOK
HSS	HOLLOW STRUCTURAL STEEL
IN	INCHES
INFO	INFORMATION
INT	INTERIOR
JST	JOIST
JT	JOINT
K	KIPS
KB	KNEE BRACE
L	ANGLE
LB	POUND
LF	LINEAR FOOT
LG	LENGTH
LLBB	LONG LEG BACK TO BACK
LLH	LONG LEG HORIZONTAL
LLV	LONG LEG VERTICAL
LO	LOW
LT WT	LIGHTWEIGHT
LVL	LEVEL
LWC	LIGHT WEIGHT CONCRETE
MAX	MAXIMUM
MC	MOMENT CONNECTION
MCJ	MASONRY CONTROL JOINT
MECH	MECHANICAL
MEP	MECHANICAL, ELECTRICAL & PLUMBING
MEZZ	MEZZANINE
MFR, MANUF	MANUFACTURER
MID	MIDDLE
MIL	MILLIMETER
MIN	MINIMUM
MISC	MISCELLANEOUS
MO	MASONRY OPENING
MTL	METAL
N	NORTH
NA	NOT APPLICABLE
NDT	NON-DESTRUCTIVE TESTING
NIC	NOT IN CONTRACT
NTS	NOT TO SCALE
OC	ON CENTER
OH	OPPOSITE HAND
OPNG	OPENING
OPP	OPPOSITE
OWJ	OPEN WEB JOIST
PAF	POWER ACTUATED FASTENERS
PERP	PERPENDICULAR
PJP	PARTIAL JOINT PENETRATION
PL	PLATE
PLF	POUNDS PER LINEAR FOOT
PLYWD	PLYWOOD
PSF	POUNDS PER SQUARE FOOT
PSI	POUNDS PER SQUARE INCH
R	RADIUS
REF	REFER, REFERENCE
REINF	REINFORCED, REINFORCEMENT
REM	REMAINDER
REQ'D	REQUIRED
REQ'MTS, REQMTS	REQUIREMENTS
REV	REVISION
SAD	SEE ARCHITECTURAL DRAWINGS
SC	SLIP CRITICAL
SCHED	SCHEDULE
SECT	SECTION
SF	SQUARE FEET
SHT	SHEET
SHTG	SHEATHING
SIM	SIMILAR
SMD	SEE MECHANICAL DRAWINGS
SMS	SHEET METAL SCREW
SOG	SLAB ON GRADE
SPA	SPACES, SPACING
SQ	SQUARE
SSH	SHORT SLOTTED HOLE
STD	STANDARD
STL	STEEL
STRUCT	STRUCTURE, STRUCTURAL
SUPP	SUPPORT
T&B	TOP AND BOTTOM
TEMP	TEMPORARY
THK	THICK
TO	TOP OF
TOC	TOP OF CONCRETE
TOF	TOP OF FOUNDATION
TOM	TOP OF MASONRY
TOS	TOP OF STEEL
TOSC	TOP OF STRUCTURAL CONCRETE
TOSL	TOP OF SLAB
TOT	TOTAL
TOW	TOP OF WALL
TYP	TYPICAL
UON	UNLESS OTHERWISE NOTED
V, VERT	VERTICAL
VIF	VERIFY IN FIELD
W	WIDE FLANGE
W/	WITH
W/O	WITHOUT
WB	WIND BRACE
WBBP	WIND BRACE BASEPLATE
WHSS	WELDED HEADED STEEL STUD
WP	WORKING POINT, WORK POINT
WRT	WITH RESPECT TO
WT	WEIGHT
WWF	WELDED-WIRE FABRIC
YD	YARD

REGISTERED PROFESSIONAL ENGINEER ALAN W. DYCK 5470 EXP. 09-30-24 STRUCTURAL STATE OF CALIFORNIA

03-22-24

Stantec
801 S. Figueroa Street, Suite 300
Los Angeles, CA 90017

Copyright Reserved
The Contractor shall verify and be responsible for all dimensions. DO NOT scale the drawing - any errors or omissions shall be reported to Stantec without delay.
The Copyrights to all designs and drawings are the property of Stantec. Reproduction or use for any purpose other than that authorized by Stantec is forbidden.

REVISION	DESCRIPTION	DATE
5/13/2024	100% RESUBMITTAL	
03/27/2024	100% CONSTRUCTION DRAWING SUBMITTAL	
02/13/2024	UPDATED 90% CONSTRUCTION DRAWING SUBMITTAL	
12/07/2023	90% CONSTRUCTION DRAWING SUBMITTAL	

REPLACEMENT OF MECHANICAL UNITS AT SANTA ANA BUS BASE
4301 W. MAC ARTHUR BLVD., SANTA ANA, CA

GENERAL NOTES

JOB #:	
DESIGN BY:	IS
DRAWN BY:	DK
CHECKED BY:	MP
DATE:	12/07/2023
SCALE:	3/4" = 1'-0"
SHEET:	S-100M

OCTA
ORANGE COUNTY TRANSPORTATION AUTHORITY
550 SOUTH MAIN STREET, ORANGE, CA

IFB 4-2550 EXHIBIT B

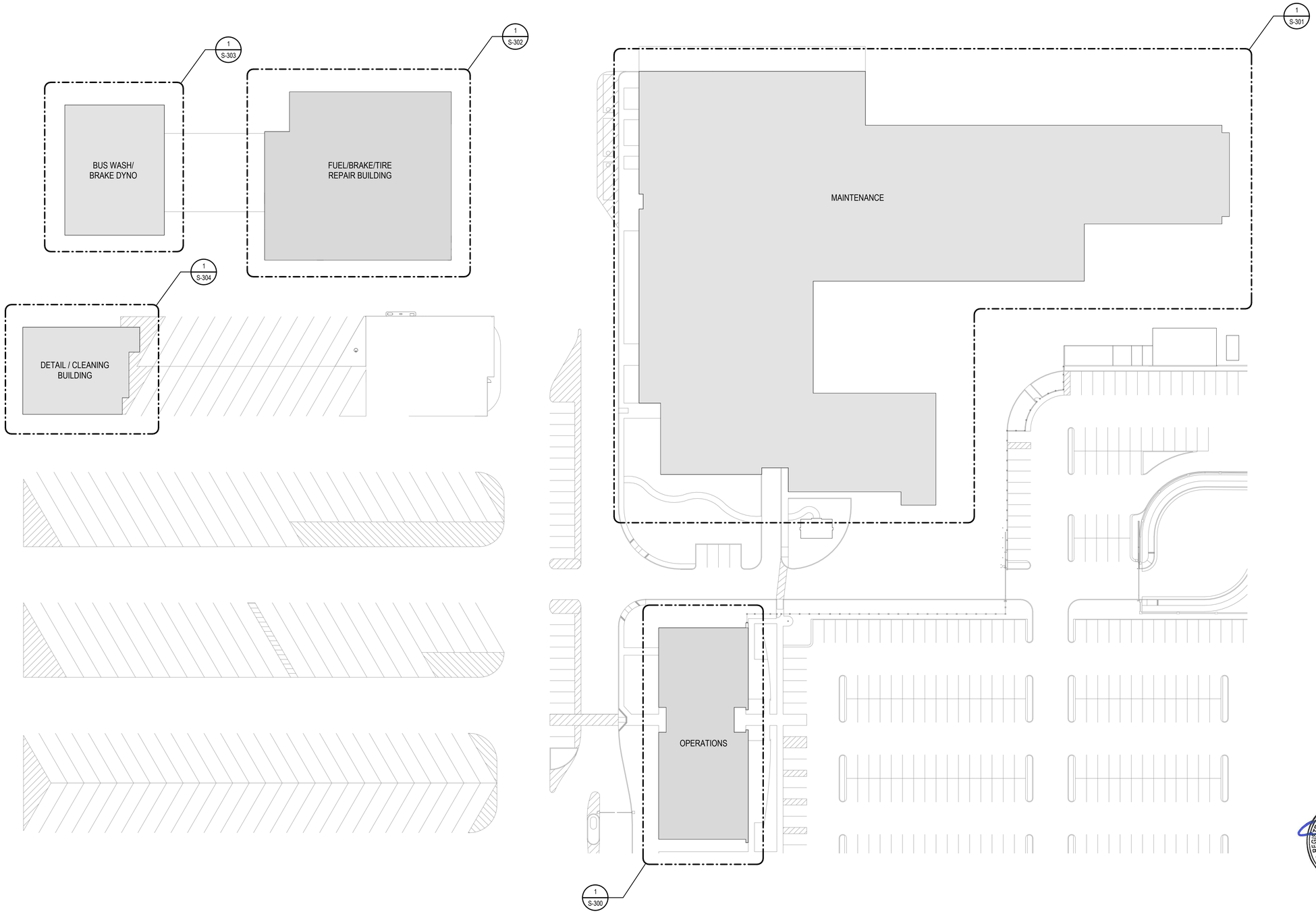

1 S-200 **OVERALL PLAN**
1" = 40'-0"

N

Stantec
801 S. Figueroa Street, Suite 300
Los Angeles, CA 90017

Copyright Reserved
The Contractor shall verify and be responsible for all dimensions. DO NOT scale the drawing - any errors or omissions shall be reported to Stantec without delay.
The copyright in all designs and drawings are the property of Stantec. Reproduction or use for any purpose other than that authorized by Stantec is forbidden.

REVISION	DESCRIPTION	DATE
5/13/2024	100% RESUBMITTAL	
03/27/2024	100% CONSTRUCTION DRAWING SUBMITTAL	
02/13/2024	UPDATED 90% CONSTRUCTION DRAWING SUBMITTAL	
12/07/2023	90% CONSTRUCTION DRAWING SUBMITTAL	

REPLACEMENT OF MECHANICAL UNITS AT SANTA ANA BUS BASE
4301 W. MAC ARTHUR BLVD., SANTA ANA, CA

OVERALL PLAN

JOB #:	
DESIGN BY:	IS
DRAWN BY:	DK
CHECKED BY:	MP
DATE:	12/07/2023
SCALE:	1" = 40'-0"
SHEET:	S-200M

REGISTERED PROFESSIONAL ENGINEER
ALAN W. DYCK
5470
EXP. 09-30-24
STRUCTURAL
STATE OF CALIFORNIA
03-22-24

OCTA
ORANGE COUNTY
TRANSPORTATION AUTHORITY
550 SOUTH MAIN STREET, ORANGE, CA

Autodesk Docs://2014233703_Santa_Ana_Bus/stn_struc_2014233703_Santa_Ana_Bus_OCTA_CTO-3_Mech_Units.rvt

3/22/2024 10:38:09 AM

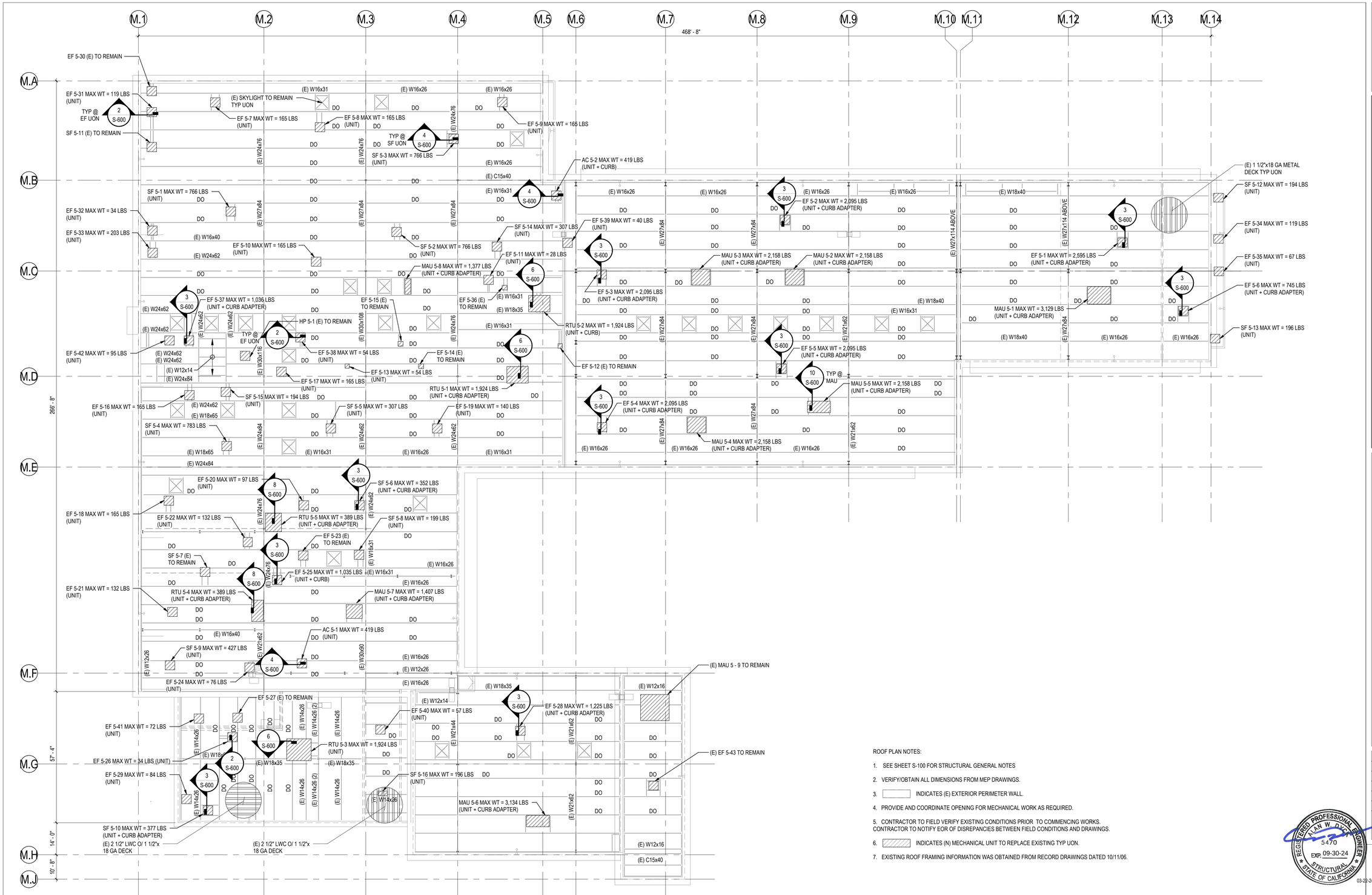

1 S-301 **MAINTENANCE BUILDING STRUCTURAL ROOF PLAN**

1" = 20'-0"

ROOF PLAN NOTES:

1. SEE SHEET S-100 FOR STRUCTURAL GENERAL NOTES
2. VERIFY/OBTAIN ALL DIMENSIONS FROM MEP DRAWINGS.
3. INDICATES (E) EXTERIOR PERIMETER WALL.
4. PROVIDE AND COORDINATE OPENING FOR MECHANICAL WORK AS REQUIRED.
5. CONTRACTOR TO FIELD VERIFY EXISTING CONDITIONS PRIOR TO COMMENCING WORKS. CONTRACTOR TO NOTIFY EOR OF DISREPANCIES BETWEEN FIELD CONDITIONS AND DRAWINGS.
6. INDICATES (N) MECHANICAL UNIT TO REPLACE EXISTING TYP UON.
7. EXISTING ROOF FRAMING INFORMATION WAS OBTAINED FROM RECORD DRAWINGS DATED 10/11/06.

REGISTERED PROFESSIONAL ENGINEER ALAN W. DAVIS 5470 EXP. 09-30-24 STRUCTURAL STATE OF CALIFORNIA

03-22-24

N

Stantec
801 S. Figueroa Street, Suite 300
Los Angeles, CA 90017

Copyright Reserved
The Contractor shall verify and be responsible for all dimensions. DO NOT scale the drawing - any errors or omissions shall be reported to Stantec without delay.
This drawing is the property of Stantec and must not be reproduced or used for any purpose other than that authorized by Stantec in a Subdivision.

DATE	DESCRIPTION	REVISION
5/13/2024	100% RESUBMITTAL	
03/27/2024	100% CONSTRUCTION DRAWING SUBMITTAL	
02/13/2024	UPDATED 90% CONSTRUCTION DRAWING SUBMITTAL	
12/07/2023	90% CONSTRUCTION DRAWING SUBMITTAL	

REPLACEMENT OF MECHANICAL UNITS AT SANTA ANA BUS BASE
4301 W. MAC ARTHUR BLVD., SANTA ANA, CA

MAINTENANCE BUILDING STRUCTURAL ROOF PLAN

JOB #:	
DESIGN BY:	IS
DRAWN BY:	DK
CHECKED BY:	MP
DATE:	12/07/2023
SCALE:	1" = 20'-0"
SHEET:	S-301M

OCTA
ORANGE COUNTY TRANSPORTATION AUTHORITY
550 SOUTH MAIN STREET, ORANGE, CA

Autodesk Docs://2014233703_Santa_Ana_Bus/stn_struc_2014233703_Santa_Ana_Bus_OCTA_CTO-3_Mech_Units.rvt
3/22/2024 10:38:16 AM

MODEL #'S	WT (LBS)	B (IN)	D (IN)	H (IN)	CG (IN)
SF 4-1	175	26	26	27.25	49
SF 5-1, 5-2, 5-3	766	52	52	39.25	56
SF 5-4	783	52	52	39.25	56
SF 5-5	307	34	34	27.25	49
SF 5-8	199	26	26	27.25	49
SF 5-9,6-2	427	40	40	31.25	52
SF 5-12	194	26	26	27.25	49
SF 5-13,5-16	196	26	26	27.25	49
SF 5-14	307	34	34	27.25	49
SF 5-15	194	26	26	27.25	49
SF 6-1	783	52	52	39.25	56
AC 4-2	419	52	45	46	60
AC 5-1, 5-2	419	52	45	46	73

NOTES:
1. MAX WEIGHT DOES NOT INCLUDE (E) CURB.
2. RE-USE EXISTING CURB SMD.

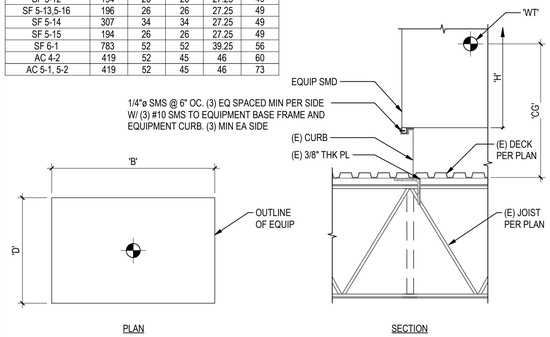

4 S-600 MECH UNIT ANCHORAGE GROUP C

NTS

MODEL #'S	WT (LBS)	B (IN)	D (IN)	H (IN)	CG (IN)
EF 5-1	2595	66	66	136.79	122
EF 5-2 & 5-5	2095	60	60	125.19	108
EF 5-3 & 5-4	2095	60	60	125.19	108
EF 5-6	745	40	40	83.45	94
EF 5-25	1035	48	48	103.79	105
EF 5-28	1225	66	66	134.79	121
EF 5-37	1036	48	48	103.79	105
EF 6-1	2113	60	60	127.19	117
EF 6-2	1805	56	56	120.45	114
EF 6-3	1065	48	48	101.79	104
SF 5-6	352	34	34	27.25	71
SF 5-10	377	34	34	27.25	71

NOTES:
1. MAX WEIGHT DOES NOT INCLUDE (E) CURB.
2. RE-USE EXISTING CURB SMD.

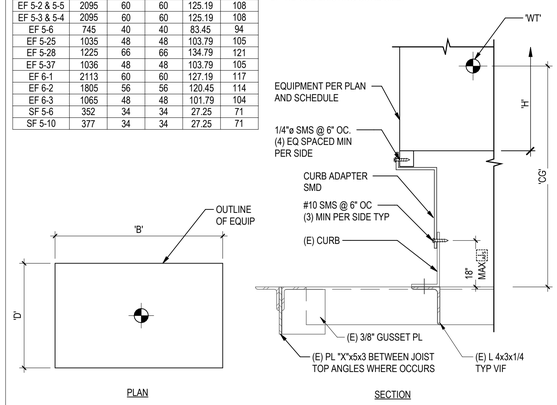

3 S-600 MECH UNIT ANCHORAGE GROUP B

NTS

MODEL #'S	WT (LBS)	B (IN)	D (IN)	H (IN)	CG (IN)
EF 4-1	45	19	19	28.25	46
EF 4-2	54	19	19	28.25	46
EF 4-3	54	19	19	28.25	46
EF 4-4, 5-26	34	19	19	13.38	38
EF 5-7, 5-8, 5-9, 5-10	165	34	34	33.88	49
EF 5-11	28	17	17	13.5	38
EF 5-13	54	19	19	28.25	46
EF 5-16, 5-17, 5-18	165	34	34	33.88	49
EF 5-19	140	30	30	28.63	46
EF 5-20	97	22	22	29.75	47
EF 5-21, 5-22	132	30	30	28.63	46
EF 5-24	76	22	22	29.75	47
EF 5-29	84	22	22	29.75	47
EF 5-31	119	22	22	29.75	47
EF 5-32	34	19	19	13.38	38
EF 5-33	203	34	34	33.88	49
EF 5-34	119	22	22	29.75	47
EF 5-35	67	19	19	28.25	46
EF 5-38	54	19	19	28.25	46
EF 5-39	40	19	19	15.25	39
EF 5-40	57	19	19	28.25	46
EF 5-41	72	22	22	29.75	47
EF 6-4	28	17	17	13.5	38
EF 6-6	37	19	19	13.38	38
EF 6-7	203	34	34	33.88	49
EF 6-8	34	19	19	13.38	38
EF 6-9	73	22	22	29.75	47
EF 7-1	773	40	40	36	50
EF 7-2	141	30	30	28.63	46
EF 8-1	45	19	19	28.25	46
EF 5-42	95	22.91	30.88	26	47

NOTES:
1. MAX WEIGHT DOES NOT INCLUDE (E) CURB.
2. RE-USE EXISTING CURB SMD.

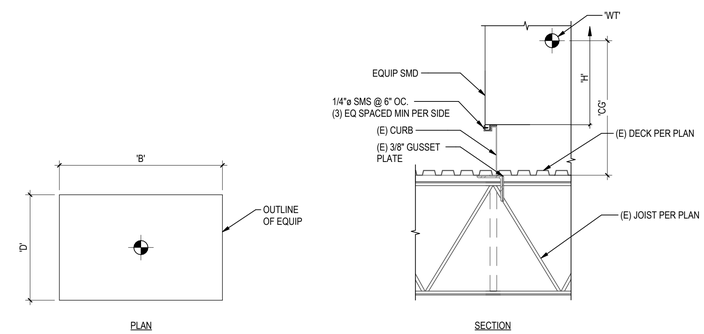

2 S-600 MECH UNIT ANCHORAGE GROUP A

NTS

MODEL #'S	WT (LBS)	B (IN)	D (IN)	H (IN)	CG (IN)
AC 4-1	419	52	45	46	73
RTU 5-4	389	48.8	41.3	35.4	80.3
RTU 6-1	474	58.6	44.3	39.4	94
HP 6-1	389	52	45	46	73
AC 6-1	419	52	45	46	73
RTU 5-5	389	52	45	46	73

NOTES:
1. MAX WEIGHT INCLUDES EQUIPMENT WT & CURB ADAPTER ONLY.
2. RE-USE EXISTING CURB SMD.

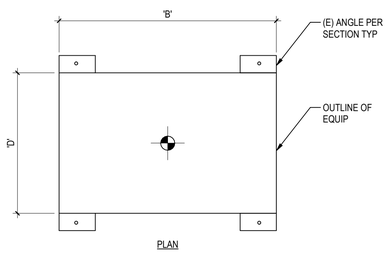

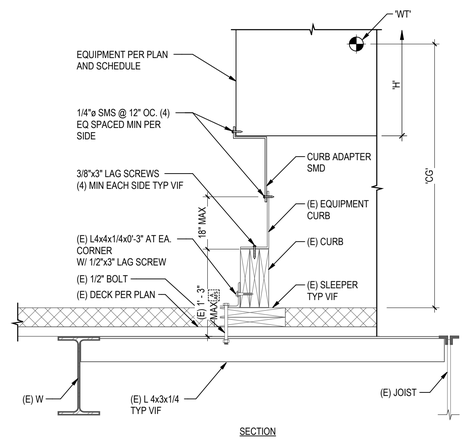

8 S-600 MECH UNIT ANCHORAGE GROUP F

NTS

MODEL #'S	WT (LBS)	B (IN)	D (IN)	H (IN)	CG (IN)
RTU 4-1	2106	52	45	46	119
RTU 4-2	968	88.08	53.28	50.88	87
RTU 4-3	1020	88.08	53.28	50.88	87
RTU 4-4	1020	88.08	53.28	50.88	87
RTU 5-1, 5-2	1924	123	87	59.04	94
RTU 5-3	1924	123	87	59.04	94

NOTES:
1. MAX WEIGHT INCLUDES EQUIPMENT WT & CURB ADAPTER ONLY.
2. RE-USE EXISTING CURB SMD.

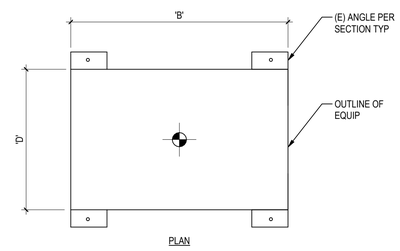

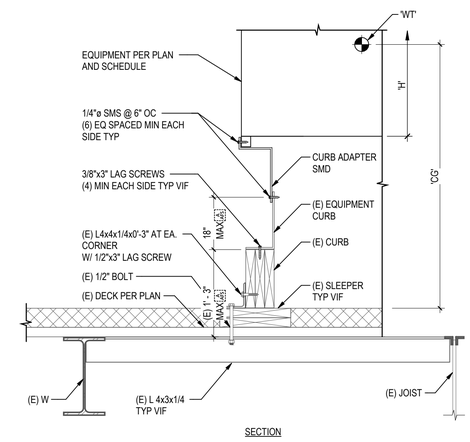

6 S-600 MECH UNIT ANCHORAGE GROUP E

NTS

MODEL #'S	WT (LBS)	B (IN)	D (IN)	H (IN)	CG (IN)
MAU 5-1	3129	186	91	60	85.5
MAU 5-2,5-5	2158	165.5	78	51	68.5
MAU 5-3,5-4	2158	165.5	78	51	68.5
MAU 5-6	3134	186	91	60	86.5
MAU 5-7	1407	140	52	39	68.5
MAU 5-8	1377	140	52	39	68.5

NOTES:
1. MAX WEIGHT INCLUDES EQUIPMENT WT & CURB ADAPTER ONLY.
2. RE-USE EXISTING CURB SMD.

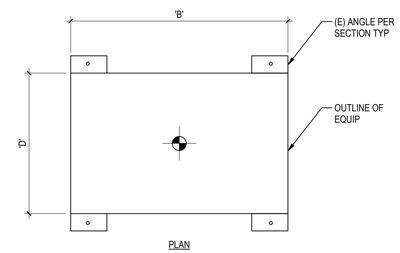

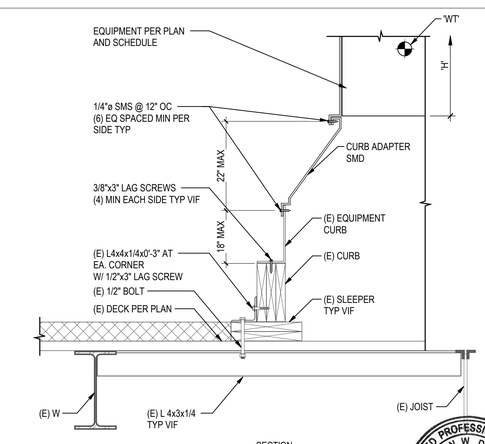

10 S-600 MECH UNIT ANCHORAGE GROUP D

NTS

REGISTERED PROFESSIONAL ENGINEER ALAN W. DYER 5470 EXP. 09-30-24 STRUCTURAL STATE OF CALIFORNIA
03-22-24

IFB 4-2550 EXHIBIT B

Stantec
801 S. Figueroa Street, Suite 300
Los Angeles, CA 90017

Copyright Reserved
The Contractor shall verify and be responsible for all dimensions. DO NOT scale the drawing - any errors or omissions shall be reported to Stantec without delay.
This drawing is the property of Stantec and must not be reproduced or used for any purpose other than that authorized by Stantec in writing before hand. Reproduction or use for any purpose other than that authorized by Stantec is forbidden.

REVISION	DESCRIPTION	DATE
5/13/2024	100% RESUBMITTAL	
03/27/2024	100% CONSTRUCTION DRAWING SUBMITTAL	
02/13/2024	UPDATED 90% CONSTRUCTION DRAWING SUBMITTAL	
12/07/2023	90% CONSTRUCTION DRAWING SUBMITTAL	

REPLACEMENT OF MECHANICAL UNITS AT SANTA ANA BUS BASE

4301 W. MAC ARTHUR BLVD., SANTA ANA, CA

ANCHORAGE SCHEDULES

JOB #:	
DESIGN BY:	IS
DRAWN BY:	DK
CHECKED BY:	MP
DATE:	12/07/2023
SCALE:	As indicated
SHEET:	S-600M

OCTA

ORANGE COUNTY TRANSPORTATION AUTHORITY
550 SOUTH MAIN STREET, ORANGE, CA

Autodesk Docs://2014233703_Santa_Ana_Bus/stn_struc_2014233703_Santa_Ana_Bus_OCTA_CTO-3_Mech_Units.rvt

3/22/2024 10:38:18 AM

IFB 4-2550 EXHIBIT B

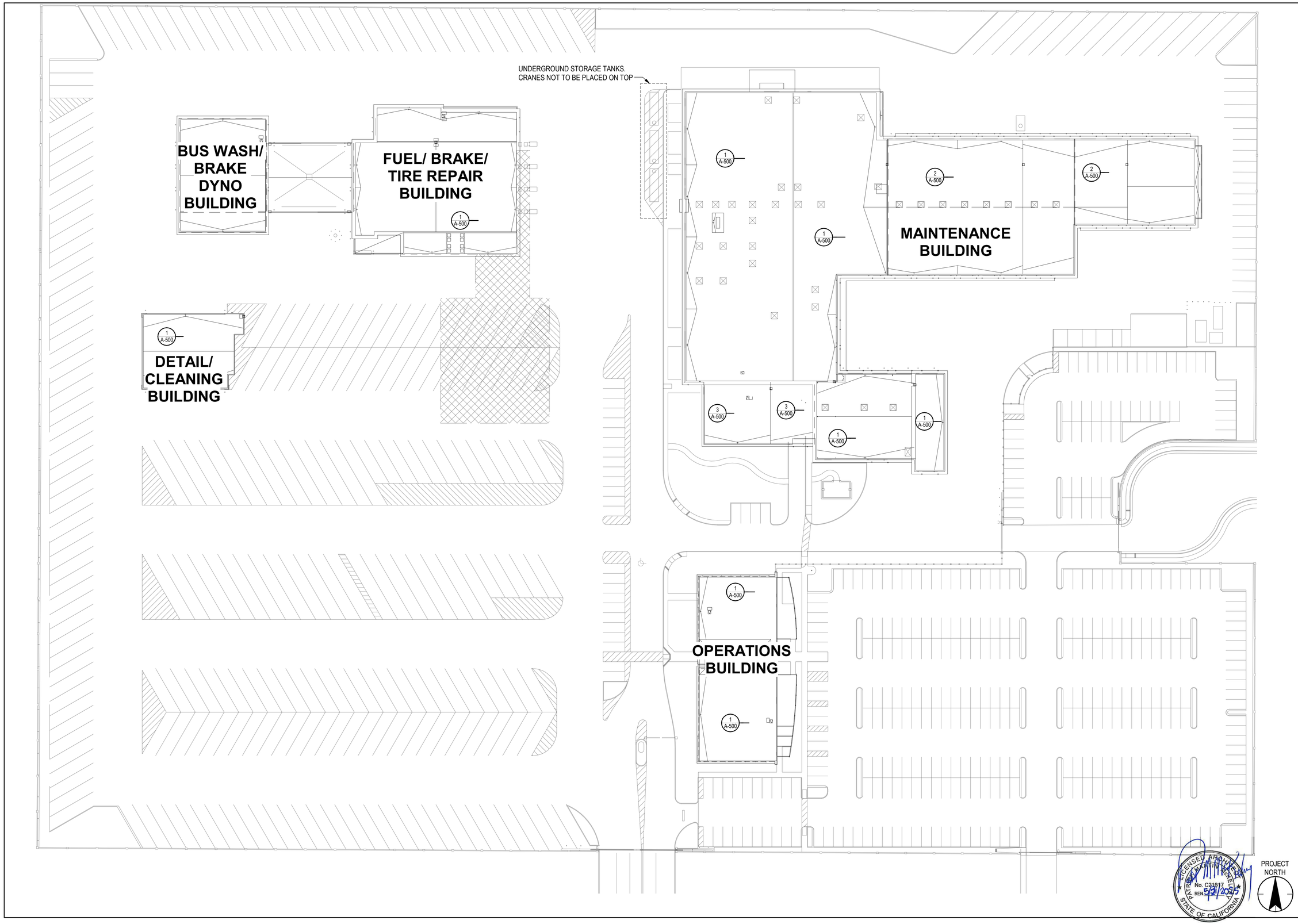

Stantec

801 S. Figueroa Street, Suite 300
Los Angeles, CA 90017

Copyright Reserved
The Contractor shall verify and be responsible for all dimensions. DO NOT scale the drawing - any errors or omissions shall be reported to Stantec without delay.
The Copyright in the design and drawing is the property of Stantec. Reproduction or use for any purpose other than that authorized by Stantec is forbidden.

REVISION	DESCRIPTION	DATE
	100% RESUBMITTAL	5/13/2024
3	100% CONSTRUCTION DRAWING SUBMITTAL	03/18/2024
2	90% UPDATED CONSTRUCTION SUBMITTAL	02/13/2024
1	90% CONSTRUCTION DRAWING SUBMITTAL	12/07/2023

REPLACEMENT OF MECHANICAL UNITS AT SANTA ANA BUS BASE

4301 W MacArthur Blvd, Santa Ana, CA 92704

ARCHITECTURAL SITE PLAN

JOB #:	
DESIGN BY:	Designer
DRAWN BY:	Author
CHECKED BY:	Checker
DATE:	
SCALE:	1" = 40'-0"
SHEET:	A-100M

LICENSED ARCHITECT
PATRICK MARTIN HACKELEY
No. C21617
REN. 5/31/2025
STATE OF CALIFORNIA

OCTA

ORANGE COUNTY TRANSPORTATION AUTHORITY
550 SOUTH MAIN STREET, ORANGE, CA

Autodesk Docs://2014233703_Santa_Ana_Bus/arch_2014233703-Revit22.rvt

5/9/2024 10:14:26 AM

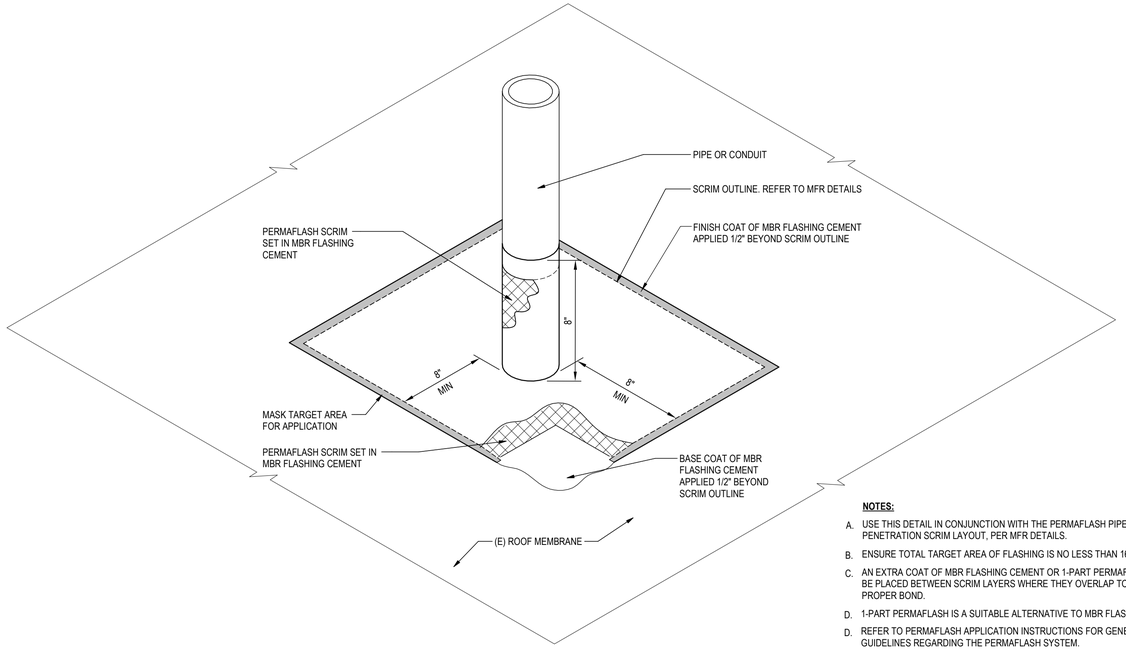

NOTES:

A. USE THIS DETAIL IN CONJUNCTION WITH THE PERMAFLASH PIPE PENETRATION SCRIM LAYOUT, PER MFR DETAILS.

B. ENSURE TOTAL TARGET AREA OF FLASHING IS NO LESS THAN 16" x 16".

C. AN EXTRA COAT OF MBR FLASHING CEMENT OR 1-PART PERMAFLASH MUST BE PLACED BETWEEN SCRIM LAYERS WHERE THEY OVERLAP TO ENSURE A PROPER BOND.

D. 1-PART PERMAFLASH IS A SUITABLE ALTERNATIVE TO MBR FLASHING CEMENT.

D. REFER TO PERMAFLASH APPLICATION INSTRUCTIONS FOR GENERAL GUIDELINES REGARDING THE PERMAFLASH SYSTEM.

E. AFTER THE PERMAFLASH HAS CURED OR GRANULES BROADCAST INTO THE WET CEMENT AN ADDITIONAL SURFACING OF JM COATING TO BE APPLIED.

5 / A-500 PIPE/ CONDUIT PENETRATION @ ROOF TYPE 1 & 3

1 1/2" = 1'-0"

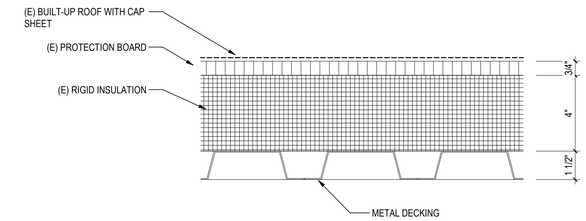

1 / A-500 ROOF TYPE 1

3" = 1'-0"

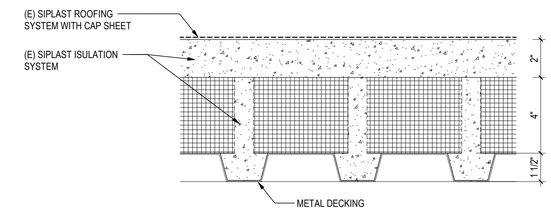

2 / A-500 ROOF TYPE 2

3" = 1'-0"

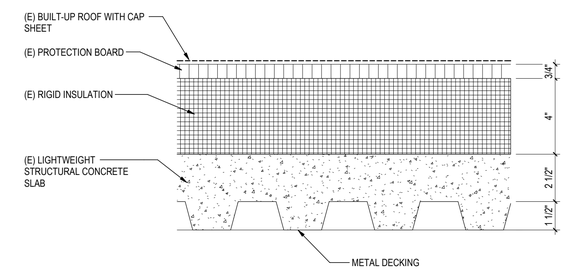

3 / A-500 ROOF TYPE 3

3" = 1'-0"

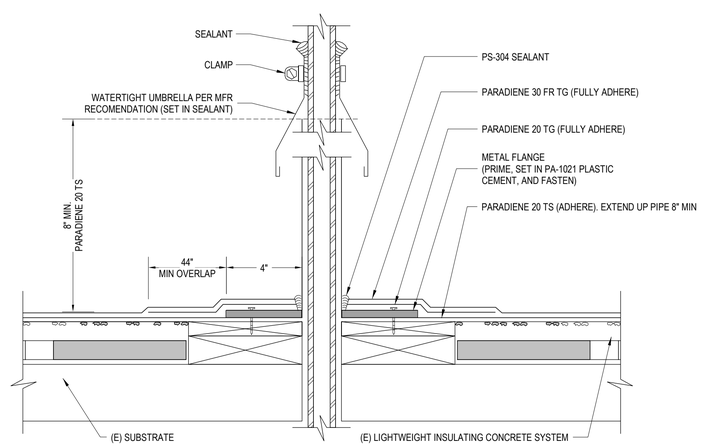

6 / A-500 PIPE/ CONDUIT PENETRATION @ ROOF TYPE 2

3" = 1'-0"

Stantec
801 S. Figueroa Street, Suite 300
Los Angeles, CA 90017

Copyright Reserved
The contractor shall verify and be responsible for all dimensions. DO NOT scale the drawing - any errors or omissions shall be reported to Stantec without delay.
This drawing is the property and copyright of Stantec and must not be copied, reproduced, transmitted, stored in a retrieval system or used in any manner or for any purpose other than that authorized by Stantec is prohibited.

REVISION	DESCRIPTION	DATE
1	90% CONSTRUCTION DRAWING SUBMITTAL	12/07/2023
2	90% UPDATED CONSTRUCTION SUBMITTAL	02/13/2024
3	100% CONSTRUCTION DRAWING SUBMITTAL	03/18/2024
	100% RESUBMITTAL	5/13/2024

REPLACEMENT OF MECHANICAL UNITS AT SANTA ANA BUS BASE
4301 W MacArthur Blvd, Santa Ana, CA 92704

DETAILS

JOB #:	
DESIGN BY:	Designer
DRAWN BY:	Author
CHECKED BY:	Checker
DATE:	
SCALE:	As indicated
SHEET:	A-500M

LICENSED ARCHITECT
No. C31617
REN. 5/31/2024
STATE OF CALIFORNIA

OCTA
ORANGE COUNTY TRANSPORTATION AUTHORITY
550 SOUTH MAIN STREET, ORANGE, CA

Autodesk Docs://2014233703_Santa_Ana_Bus/arch_2014233703-Revit22.rvt

IFB 4-2550 EXHIBIT B

(HVAC)

***NOTE:** ALL DUCT SIZES ARE INTERIOR, FREE DIMENSIONS ALWAYS WIDTH (HORIZONTAL DIM.) x HEIGHT (VERTICAL DIM.)

- AIR FLOW ARROW
- 18"x12" — 18"x12" — RECTANGULAR DUCT AND SIZE*
- 18"ø — 18"ø — ROUND DUCT AND SIZE*
- 18"x12"ø — 18"x12"ø — FLAT OVAL DUCT AND SIZE*
- 18"x12" — EXTERIOR DUCT TREATMENT*
- 18"x12" — 18"x12" — RECTANGULAR DUCT WITH ACOUSTIC LINING*
- 30"x12" — DUCT SECTION, SUPPLY AIR. APPLIES TO RECT., ROUND AND OVAL
- DUCT SECTION, OUTSIDE AIR. APPLIES TO RECT., ROUND AND OVAL
- DUCT SECTION, RETURN AIR. APPLIES TO RECT., ROUND AND OVAL
- DUCT SECTION, EXHAUST AIR. APPLIES TO RECT., ROUND AND OVAL
- FLEXIBLE DUCT
- ELBOW TURN, SUPPLY DOWN. APPLIES TO RECT., ROUND AND OVAL
- DUCT SECTION, OUTSIDE AIR. APPLIES TO RECT., ROUND AND OVAL
- DUCT SECTION, OUTSIDE AIR. APPLIES TO RECT., ROUND AND OVAL
- DUCT SECTION, OUTSIDE AIR. APPLIES TO RECT., ROUND AND OVAL
- UP — CHANGE IN DUCT ELEVATION RISING IN DIRECTION INDICATED
- DN — CHANGE IN DUCT ELEVATION DROPPING IN DIRECTION INDICATED
- END CAP
- ELBOW, RECTANGULAR, SMOOTH RADIUS WITH SPLITTER VANES (0.25 R/W DEFAULT)
- ELBOW, RECTANGULAR, SMOOTH RADIUS WITHOUT VANES (1.5 R/W DEFAULT)
- ELBOW, ROUND, SMOOTH RADIUS (1.5 R/W DEFAULT)
- MITERED ELBOW, RECTANGULAR, WITHOUT VANES
- MITERED ELBOW, RECTANGULAR, WITH TURNING VANES
- RECTANGULAR TO ROUND TRANSITION
- DUCT ACCESS DOOR (TOP, SIDE, BOTTOM)
- FLEXIBLE CONNECTION
- BDD — BACKDRAFT DAMPER
- COD — CABLE OPERATED DAMPER
- MANUAL DAMPER
- M — MOTORIZED DAMPER
- CAR — PRESSURE INDEPENDENT REGULATOR
- FIRE DAMPER
- SMOKE DAMPER
- SMOKE AND FIRE DAMPER
- DUCT SILENCER/TRANSFER ELBOW
- T — CONTROL DEVICE (REFER TO CONTROLS LEGEND)
- AIR FLOW MEASURING STATION (REFER TO CONTROLS LEGEND)
- QUANTITY / TYPE / SIZE (IN.) / VOLUME (CFM) — AIR OUTLET OR INLET TAG)REFER TO SCHEDULE)
- RECTANGULAR DIFFUSER, SUPPLY. OPTIONAL ARROWS SHOW THE FLOW DIRECTION.
- RECTANGULAR REGISTER OR GRILLE, RETURN
- RECTANGULAR REGISTER OR GRILLE, EXHAUST
- ROUND DIFFUSER, SUPPLY
- LINEAR DIFFUSER
- SIDEWALL REGISTER OR GRILLE, SUPPLY
- SIDEWALL GRILLE, RETURN OR EXHAUST
- UC — UNDERCUT DOOR
- DOOR GRILLE OR LOUVER
- TRANSFER GRILLE OR LOUVER
- COIL (REFER TO CONTROLS LEGEND)
- QUANTITY / TYPE / LENGTH (FT.) / CAPACITY (MBH) — RADIATION HEATING TAG (REFER TO SCHEDULE)

NOTE: NOT ALL SYMBOLS, SYSTEMS, AND ABBREVIATIONS MAY BE USED ON THIS PROJECT

(HVAC)

- EXHAUST FAN
- SUPPLY FAN
- EXHAUST FAN
- ROOFTOP UNIT
- MAKEUP AIR UNIT
- PACKAGED AIR CONDITIONER
- PACKAGED HEAT PUMP

WORK DEFINITION

- NEW WORK (N)
- EXISTING (E)
- REMOVE EXISTING (D)
- ### — KEY NOTE
- ### — EQUIPMENT IDENTIFICATION
- CONNECTION TO EXISTING
- DISCONNECT (CUT AND CAP)
- POINT OF DEMOLITION

ABBREVIATIONS

A/C	AIR CONDITIONING UNIT
AAV	AUTOMATIC AIR VENT
ADA	AMERICANS WITH DISABILITIES ACT
ADJ	ADJUSTABLE
AFC	ABOVE FINISHED CEILING
AFF	ABOVE FINISHED FLOOR
AFG	ABOVE FINISHED GRADE
AFR	ABOVE FINISH ROOF
AHJ	AUTHORITY HAVING JURISDICTION
AP	ACCESS PANEL
APD	AIR PRESSURE DROP
AVG	AVERGAGE
BAS	BUILDING AUTOMATION SYSTEM
BDD	BACKDRAFT DAMPER
BHP	BRAKE HORSEPOWER
BMS	BUILDING MANAGEMENT SYSTEM
BOD	BOTTOM OF DUCT
BOP	BOTTOM OF PIPE
BTU	BRITISH THERMAL UNIT
BTUH	BRITISH THERMAL UNIT PER HOUR
C/W	COMPLETE WITH
CAV	CONSTANT AIR VOLUME
CBV	CIRCUIT BALANCING VALVE
CFM	CUBIC FEET PER MINUTE
DB	DRY BULB TEMEPRATURE
dB	DECIBEL(S)
dBA	A-WEIGHTED DECIBLES
DDC	DIRECT DIGITAL CONTROL
DEG	DEGREE
DIA./Ø	DIAMETER
DIFF	DIFFERENTIAL
DIV	DIVISION
DN	DOWN
DWG	DRAWING
EA	EXHAUST AIR
EA (D)	EXHAUST AIR, DISHWASH
EA (G)	EXHAUST AIR, GENERAL
EA (K)	EXHAUST AIR, KITCHEN
EA (LAB)	EXHAUST AIR, LABORATORY
EA (LD)	EXHAUST AIR, LAUNDRY/DRYER
EA (W)	EXHAUST AIR, WASHROOM
EAT	ENTERING AIR TEMPERATURE
EAV	EXHAUST AIR VALVE
ECM	ELECTRONICALLY COMMUNICATED MOTOR
ED	EXISTING TO BE DEMOLISHED (DEMOLITION PLANS)
EER	ENERGY EFFICIENCY RATIO
EG	ETHELYENE GLYCOL
EMCS	ENERGY MANAGMENT CONTROL SYSTEM
ER	EXISTING RELOCATED (NEW CONSTRUCTION PLANS)
ERL	EXISTING TO BE RELOCATED (DEMOLITION PLANS)
ESP	EXTERNAL STATIC PRESSURE
EWT	ENTERING WATER TEMPERATURE
EXIST / E	EXISTING (DEMOLITION PLANS)
FC	FAIL CLOSED
FLA	FULL LOAD AMPERAGE
FO	FAIL OPEN
FP	FIRE PROTECTION
FPM	FEET PER MINUTE
FPS	FEET PER SECOND
FT	FOOT/FEET
GA	GAUGE
GAL	GALLON (US)
GC	GENERAL CONTRACTOR
GEO	GEODETIC
GPM	GALLONS PER MINUTE
HEPA	HIGH EFFICIENCY PARTICULATE AIR (FILTER)
HP	HORSEPOWER
HR	HOUR
HVAC	HEATING / VENTILATING / AIR CONDITIONING
HZ	HERTZ
IE	INVERT ELEVATION
IEER	INTEGRATED ENERGY EFFECIENCY RATIO
IN	INCHES
IN WG	INCHES WATER GAUGE
IPLV	INTEGRATED PART LOAD VALUE
kW	KILOWATT
kWh	KILOWATT HOUR
LAT	LEAVING AIR TEMPERATURE
LBS	POUNDS
LF	LINEAR FEET
LWT	LEAVING WATER TEMPERATURE
M	METER
MAX	MAXIMUM
MBH	THOUSAND OF BTUH
MCA	MINIMUM CIRCUIT AMPS
MERV	MINIMUM EFFECIENCY REPORTING VALUES
MFR	MANUFACTURER
MIN	MINIMUM
MOP	MAXIMUM OVERCURRENT PROTECTION
MWT	MEAN WATER TEMPERATURE
N/A	NOT APPLICABLE
NC	NOISE CRITERIA
NC	NORMALLY CLOSED
NIC	NOT IN CONTRACT
NO	NORMALLY OPEN
NPS	NOMINAL PIPE SIZE
NTS	NOT TO SCALE
OA	OUTSIDE AIR
OFCI	OWNER FURNISHED, CONTRACTOR INSTALLED
OFE	OWNER FURNISHED EQUIPMENT
OFOI	OWNER FURNISHED / OWNER INSTALLED
PG	PROPYLENE GLYCOL
POE	POINT OF ENTRANCE
POS	POINT OF SERVICE
PPM	PARTS PER MILLION
PSI	POUNDS PER SQUARE INCH
PSIA	POUNDS PER SQUARE INCH, ABSOLUTE
PSIG	POUNDS PER SQUARE INCH, GAGE
PTS	PNEUMATIC TUBE STATION

ABBREVIATIONS

PVC	POLYVINYL CHLORIDE
RA	RETURN AIR
RELA	RELIEF AIR
REQD	REQUIRED
RH	RELATIVE HUMIDITY
RPM	REVOLUTIONS PER MINUTE
SA	SUPPLY AIR
SEER	SEASONAL ENERGY EFFICIENCY RATION
SP	STATIC PRESSURE
SP	STAIR PRESSURIZATION AIR (*)
SRV	SAFETY RELIEF VALVE
TA	TRANSFER AIR
TEMP	TEMPERATURE
TSP	TOTAL STATIC PRESSURE
TSTAT	THERMOSTAT
TYP	TYPICAL
UC	UNDER CUT (DOOR)
UG	UNDERGROUND
UP	UP
VAV	VARIABLE AIR VOLUME
VFD	VARIABLE FREQUENCY DRIVE
VIF	VERIFY IN FIELD
VTR	VENT-THRU-ROOF
W/	WITH
W/O	WITHOUT
WB	WET BULB TEMPERATURE
WG	WATER GAUGE
ZN-#	ZONE
°C	CELSIUS
°F	FAHRENHEIT

EQUIPMENT IDENTIFICATION

AB-#	AIR BLENDER
AC-#	AIR COMPRESSOR
ACU-#	AIR CONDITIONING UNIT
ADS-#	AIR AND DIRT SEPARATOR
AF-#	AIR FILTER
AHU-#	AIR HANDLING UNIT
AS-#	AIR SEPARATOR
ATU-#	AIR TERMINAL UNIT
B-#	BOILER
BCU-#	BLOWER COIL UNIT
BT-#	BATH TUB
CB-#	CHILLED BEAM
CC-#	COOLING COIL
CH-#	CHILLER
CONV-#	CONVECTOR
CRU-#	CONDENSATE RETURN UNIT
CT-#	COOLING TOWER
CU-#	CONDENSING UNIT
CUH-#	CABINET UNIT HEATER
CV-#	CONTROL VALVE
DAC-#	DOOR AIR CURTAIN
DC-#	DUST COLLECTOR
DCT-#	DECONTAMINATION TANK
DCVA-#	DOUBLE CHECK VALVE ASSEMBLY
DF-#	DRINKING FOUNTAIN
DG-#	DOOR GRILLE
DS-#	DUCT SILENCER
DU-#	DEHUMIDIFICATION UNIT
DWH-#	DOMESTIC WATER HEATER
E-#	EXHAUST GRILLE / REGISTER / DIFFUSER
EL-#	EXPANSION LOOP
ERC-#	ENERGY RECOVERY COIL
ERU-#	ENERGY RECOVERY UNIT
ES-#	EMERGENCY SHOWER
ETU-#	EXHAUST TERMINAL UNIT
EWC-#	ELECTRIC WATER COOLER
EWS-#	EYE WASH STATION
F(C)-#	FAN CEILING
F(E)-#	FAN EXHAUST
F(LE)-#	FAN LABORATORY EXHAUST
F(R)-#	FAN RETURN
F(S)-#	FAN SUPPLY
F(T)-#	FAN TRANSFER
F-#	FAN
FCU-#	FAN COIL UNIT
FD-#	FLOOR DRAIN
FFU-#	FAN FILTER UNIT
FPP-#	FIRE PROTECTION PUMP
FPTU-#	FAN POWERED TERMINAL UNIT
FTR-#	FINNED TUBE RADIATOR
FUR-#	FURNACE
GFS-#	GLYCOL FEED SYSTEM
GSG-#	GAS-FIRED STEAM GENERATOR(*)
H(C)-#	HOOD (CANOPY)
H(HC)-#	HOOD (HEAT AND CONDENSATE)
H(I)-#	HOOD (INTAKE)
H(K)-#	HOOD (KITCHEN)
H(R)-#	HOOD (RELIEF)
H(RH)-#	HOOD (RANGE)
H-#	HUMIDIFIER
HC-#	HEATING COIL
HP-#	HEAT PUMP
HRU-#	HEAT RECOVERY UNIT
HT-#	HYDROPNEUMATIC TANK
HX-#	HEAT EXCHANGER
LATU-#	LAB AIR TERMINAL UNIT
LAV-#	LAVATORY
MAC-#	MEDICAL AIR COMPRESSOR
MAU-#	MAKEUP AIR UNIT
MD-#	MOTORIZED DAMPER
MSK-#	MOP SINK
MV-#	MIXING VALVE
MVP-#	MEDICAL VACUUM PUMP
P-#	PUMP
PDU-#	POOL DEHUMIDIFICATION UNIT
PRV-#	PRESSURE REDUCING VALVE
PTAC-#	PACKAGED TERMINAL AIR CONDITIONER
R-#	RETURN AIR GRILLE / REGISTER / DIFFUSER
RD-#	ROOF DRAIN
RH-#	RANGE HOOD
RP-#	RADIANT PANEL
RPBP-#	REDUCED PRESSURE BACKFLOW PREVENTER
RTU-#	ROOFTOP UNIT
S-#	SUPPLY GRILLE / REGISTER / DIFFUSER
SH-#	SHOWER
SK-#	SINK
SPC-#	SOLAR PANEL COLLECTOR
SSF-#	SIDE STREAM FILTER
T(B)-#	TANK (BUFFER TANK)
T(E)-#	TANK (EXPANSION TANK)
T(H)-#	TANK (HYDRO PNEUMATIC TANK)
T(S)-#	TANK (STORAGE TANK)
T-#	TRANSFER AIR GRILLE
UH-#	UNIT HEATER
UR-#	URINAL
USG-#	UNFIRED STEAM GENERATOR
UV-#	UNIT VENTILATOR
VA-#	VALVE
VFD-#	VARIABLE FREQUENCY DRIVE
WC-#	WATER CLOSET
WS-#	WATER SOFTENER
L-#	LOUVER

LICENSED PROFESSIONAL ENGINEER SEVAK GALSTYAN M 39730 EXP. 12/31/25 MECHANICAL STATE OF CALIFORNIA

Stantec
801 S. Figueroa Street, Suite 300
Los Angeles, CA 90017

Copyright Reserved
The Contractor shall verify and be responsible for all dimensions. DO NOT scale the drawing - any errors or omissions shall be reported to Stantec without delay.
The Copyrights to all designs and drawings are the property of Stantec. Reproduction or use for any purpose other than that authorized by Stantec is forbidden.

REVISION	DESCRIPTION	DATE
	100% RESUBMITTAL	5/13/2024
	100% CONSTRUCTION DRAWING SUBMITTAL	3/27/2024
	90% UPDATED CONSTRUCTION SUBMITTAL	2/13/2024
	90% CONSTRUCTION DRAWING SUBMITTAL	12/07/2023

REPLACEMENT OF MECHANICAL UNITS AT SANTA ANA BUS BASE
4301 W. MAC ARTHUR BLVD., SANTA ANA, CA

MECHANICAL GENERAL NOTES, SYMBOLS AND ANNOTATIONS

JOB #:	
DESIGN BY:	SG
DRAWN BY:	RW
CHECKED BY:	GY
DATE:	
SCALE:	12" = 1'-0"
SHEET:	M-001M

OCTA
ORANGE COUNTY TRANSPORTATION AUTHORITY
550 SOUTH MAIN STREET, ORANGE, CA

DEMO NOTES

1. NOT ALL EXISTING CONDITIONS HAVE BEEN SHOWN. CONTRACTOR TO FIELD VERIFY ALL EXISTING CONDITIONS PRIOR TO DEMO.
2. CONTRACTOR SHALL PROTECT ALL WORK AND EXISTING CONDITIONS ASSOCIATED WITH THIS CONTRACT FROM DAMAGE, COVER ENDS OF PIPING AND DUCTWORK NOT ACTIVELY BEING WORKED ON. IT IS THE CONTRACTOR RESPONSIBILITY TO REPAIR OR REPLACE ANY DAMAGED ITEMS THAT OCCURS DURING THIS CONSTRUCTION PROJECT AT NO COST TO THE OWNER.
3. REPLACE ALL REQUIRED EQUIPMENT, PIPING, HANGERS, CONTROLS AND ALL ASSOCIATED EXISTING SYSTEMS AS REQUIRED. TO REPLACE EACH SYSTEM, CONTRACTOR SHALL COORDINATE DEMOLITION WITH EXISTING SYSTEMS AND COMPONENTS TO REMAIN PRIOR TO WORK COMMENCING. EXISTING DUCTWORK IS TO REMAIN.
4. IT IS THE CONTRACTORS RESPONSIBILITY TO CLEAN UP ALL DEBRIS FROM SITE AT THE END OF EACH WORK DAY AND DISPOSE OFF EITHER IN LAY DOWN RECYCLE BINS PROVIDED BY THE CONTRACTOR OR OFFSITE ALL TOGETHER.
5. ALL DEMOLISHED EQUIPMENT SHALL BE TURNED OVER TO THE OWNER UNLESS DIRECTED OTHERWISE. IF OWNER IS NOT TO KEEP DEMOLISHED EQUIPMENT, DISPOSE AS REQUIRED.
6. THE CONTRACTOR SHALL VISIT THE SITE AND BE THOROUGHLY FAMILIARIZED WITH THE EXISTING CONDITIONS PRIOR TO BIDDING. INFORMATION GIVEN ON THESE DRAWINGS ABOUT THE EXISTING INSTALLATION HAS BEEN OBTAINED FROM THE EISTING AS-BUILT DRAWINGS BUT CANNOT BE GUARANTEED ACCURATE IN ALL RESPECTS. VERIFY ALL SUCH INFORMATION BEFORE PROCEEDING WITH ANY NEW WORK THAT MAY BE AFFECTED. INCLUDE AS PART OF THE CONTRACT AL WORK REQUIRED TO PRODUCE THE INDICATED RESULT.
7. UPON SUBMITTING A BID THE CONTRACTOR SHALL BE HELD TO HAVE MADE SUCH EXAMINATIONS OF THE SITE AND NO ALLOWANCE FOR EXTRAS WILL BE ALLOWED FOR ANY ERROR OR OVERSIGHT RESULTING FROM THE CONTRACTORS UNFAMILIARITY WITH THE SITE OR EXISTING CONDITIONS.
8. CONTRACTOR SHALL NOT SCALE DRAWINGS. DIMENSIONS MISSING FROM PLANS OR NEEDED FOR EXECUTION OF WORK SHALL BE CLARIFIED OR PROVIDED BY THE FACILITY REPRESENTATIVE BEFORE WORK IS INSTALLED.
9. INTERRUPTION OF EXISTING SERVICES: THE CONTRACTOR'S ATTENTION IS CALLED TO THE PRESENCE OF EXISTING, CONDUIT, PIPING, ETC. THE CONTRACTOR WILL BE HELD RESPONSIBLE FOR THE PROPER AND APPROVED REPAIR OF ANY AND ALL DAMAGE CAUSED BY HIM OR HIS WORK TO EXISTING BUILDING. ANY INTERRUPTIONS REQUIRED SHALL BE SCHEDULED TO MINIMIZE INCONVENIENCE TO THE FACILITY, AND AT TIMES AS APPROVED IN ADVANCE BY THE FACILITY REPRESENTATIVE. NEW WORK AND ISNTALLATIONS SHALL BOT IMPAIR THE PROPER FUNCTIONING OF THE EXISTING FACILITY. THE COMPLETED PROJECT SHALL BE A PROPERLY FUNCTIONING ENTITY THROUGHOUT. FURNISH ALL LABOR AND MATERIALS REQUIRED TO RELOCATE, REMOVE, REINSTALL, RECONNECT REPLACE, ETC. ANY EXISTING PIPING TO ACCOMMODATE THE WORK. CONTRACTOR SHOULD CONSIDER IN HIS BID ANY EXTRA WORK REQUIRED TO MINIMIZE SHUTDOWN TIME.
10. BEFORE DEMOLITION COMMENCES ON SITE, ALL EXISTING EQUIPMENT TO BE RETAINED AND REUSED WILL BE SURVEYED AND VALIDATED BY THE CONTRACTOR TO ESTABLISH CONDITION AND CAPACITIES. ANY EXISTING DAMAGE TO EQUIPMENT IS TO BE RECORDED AT THIS STAGE BY THE CONTRACTOR AND A FULL WRITTEN REPORT SUBMITED TO THE FACILITY REPRESENTATIVE FOR REVIEW. THE REPORT WILL INCLUDE PHOTOGRAPHIC EVIDENCE OF DAMAGE.
11. CONTRACTOR TO CROSS REFERENCE DEMOLITION AND NEW CONSTRUCTION DRAWINGS TO ENSURE CONSISTENCY IN DESIGN INTENT BEFORE PROCEEDING WITH ANY DEMOLITION WORK. ANY PIPE, VALVE, EQUIPMENT THAT IS MISTAKENLY DEMOLISHED SHALL BE RESTORED AT CONTRACTORS COST.
12. ALL POWER SUPPLIES TO EXISTING EQUIPMENT TO BE REMOVED SHALL BE ISOLATED AND MADE SAFE PER NEX PRIOR TO DEMOLITION STARTS. THIS PROCESS SHALL BE COORDINATED WITH FACILITY REPRESENTATIVES.
13. CONTRACTOR TO DO PRE-DEMOLITION SURVEY AND RED TAG UTILITIES FOR DEMOLITION. COORDIANTE WITH FACILITY REPRESENTATIVE ALL PROPOSED UTILITY SHUT DOWN AND ISOLATION PRIOR TO DEMOLITION.

APPLICABLE CODES AND DESIGN CONDITIONS

1. AMERICANS WITH DISABILITIES ACT (ADA).
2. NFPA 90A; STANDARD FOR THE INSTALLATION OF AIR-CONDITIONING AND VENTILATING SYSTEMS.
3. NFPA 90B: STANDARD FOR THE INSTALLATION OF WARM AIR HEATING AND AIR-CONDITIONING SYSTEMS.
4. NFPA 101: LIFE SAFETY CODE
5. ASHRAE 55 THERMAL ENVIRONMENTAL CONDITIONS FOR HUMAN OCCUPANCY.
6. ASHRAE 62.1 VENTILATION FOR ACCEPTABLE INDOOR AIR QUALITY.
8. 2022 CALIFORNIA MECHANICAL CODE
9. 2022 CALIFORNIA PLUMBING CODE
10. 2022 NATIONAL ELECTRICAL CODE
11. 2022 TITLE 24 REQUIREMENTS
12. CALGREEN STANDARDS

OUTDOOR DESIGN CONDITIONS:

LOCATION:
SUMMER: 98DB, 70WB
WINTER: 35DB
ELEVATION: 115 FEET

GENERAL NOTES

1. THE MECHANICAL PLANS ARE DIAGRAMMATIC IN NATURE AND ARE BASED ON ONE MANUFACTURER'S EQUIPMENT. THEY ARE NOT INTENDED TO SHOW EVERY ITEM IN ITS EXACT LOCATION. THE EXACT DIMENSIONS, OR ALL OF THE DETAILS FOR THE EQUIPMENT. THE MECHANICAL CONTRACTOR SHALL VERIFY THE ACTUAL DIMENSIONS OF THE EQUIPMENT AND ENSURE THAT IT WILL FIT IN THE AVAILABLE SPACE.
2. MECHANICAL CONTRACTOR RESPONSIBLE FOR INSTALLATION OF COMPLETED AND OPERATIONAL SYSTEMS WITH DUE RESPECT TO ALL APPLICABLE CODES AND AUTHORITIES HAVING JURISDICTION.
3. IT IS THE CONTRACTOR RESPONSIBILITY TO FIELD VERIFY ALL CONNECTION POINTS PRIOR TO INSTALL. NOT ALL CONNECTION SIZES ARE SHOWN, BUT THOSE THAT ARE APPROXIMATE AND TAKEN FROM EXISTING AS-BUILTS AND FIELD OBSERVATIONS.
4. COORDINATE PIPE ROUTING WITH DUCTWORK, SPRINKLER PIPING AND ELECTRICAL POWER/LIGHTING CIRCUITING AND STRUCTURAL MEMBERS PRIOR TO INSTALLATION.
5. CONTRACTORS TO VERIFY ALL GRADES, DIMENSIONS AND EXISTING CONDITIONS AT THE SITE BEFORE PROCEEDING WITH WORK. NOTIFY PRIME CONSULTANT OF ANY DISCREPANCIES BETWEEN DRAWINGS AND ACTUAL CONDITIONS BEFORE INSTALLATION.
6. ALL MECHANICAL EQUIPMENT CONTROLS SHALL MATCH TO WHAT IS EXISTING AT THE OCTA SANTA ANA BUS FACILITY.
7. COORDINATE INSTALLATION OF PIPING AND DUCTWORK WITH ELECTRICAL CONTRACTOR AND OTHER TRADES.
8. IF THERE IS A CONFLICT BETWEEN THE CONSTRUCTION DOCUMENTS AND SPECIFICATIONS, THE MOST STRINGENT WILL APPLY.
9. ALL EQUIPMENT SHALL BE INSTALLED IN STRICT ACCORDANCE WITH THE EQUIPMENT MANUFACTURERS. CONTRACTOR TO PROVIDE ALL FITTINGS, TRANSITIONS, DAMPERS, VALVES, AND OTHER DEVICES REQUIRED FOR A COMPLETE WORKABLE INSTALLATION.
10. PENETRATIONS OF DUCTS, PIPES, CONDUITS,ETC IN WALLS REQUIRING PROTECTED OPENINGS SHALL BE FIRE STOPPED, FIRE STOP MATERIAL, SHALL BE A UL/ULC-LISTED ASSEMBLY APPROPRIATE FOR FIRE OR SMOKE PENETRATIONS AS APPLICABLE AND AS APPROVED BY THE FIRE MARSHAL.
11. THE MECHANICAL CONTRACTOR SHALL PROVIDE AND INSTALL FIRE, SMOKE, OR COMBINATION SMOKE/FIRE DAMPERS AND ACCESS PANELS COMMENSURATE WITH THE RATING OF THE WALL IN ALL DUCTWORK THAT PENETRATES FIRE WALLS, FIRE BARRIERS, FIRE PARTITIONS, SMOKE BARRIERS AND SMOKE PARTITION IN ALL DUCTWORK THAT PENETRATES A HORIZONTAL OR VERTICAL FIRE PARTITION, OR AS OTHERWISE SHOWN ON THE DRAWINGS.
12. ALL BRANCH DUCTS SHALL HAVE VOLUME DAMPERS.
13. WHERE FLOW EXCEEDS 150 CFM, THE CONTRACTOR SHALL USE SMOOTH RADIUS ELBOWS OR TURNING VANES.
14. ALL DUCT JOINTS SHALL BE SEALED IN ACCORDANCE WITH SMACNA STANDARDS.
15. ALL DUCT DIMENSIONS ARE NET INSIDE VALUES. DIMENSIONS MAY BE CHANGED PROVIDED THAT THE NET FREE AREA IS MAINTAINED.
16. ALL CONCEALED DUCTWORK SHALL BE INSULATED WITH 1" FIBERGLASS INSULATING BLANKET WITH ALUMINUM FOIL FACING.
17. ALL DUCTWORK SHALL BE CONSTRUCTED, ERECTED AND TESTED IN ACCORDANCE WITH THE LOCAL REGULATIONS AND PROCEDURES DETAILED IN THE APPLICABLE STANDARDS ADOPTED BY THE SHEET METAL AND AIR CONDITIONING CONTRACTORS NATIONAL ASSOCIATION. (SMACNA).
18. ALL PIPE SHALL BE SUPPORTED FROM THE BUILDING STRUCTURE IN A NEAT AND WORKMANLIKE MANNER. THE USE OF WIRE OR METAL STRAPS TO SUPPORT PIPES WILL NOT BE PERMITTED. REFER TO SPECIFICATIONS FOR MINUMUM SPACING OF PIPE SUPPORTS.
19. THE HVAC SYSTEMS SHALL BE TESTED AND BALANCED BY AN INDEPENDENT AGENCY, UNDER THE SUPERVISION OF A LICENSED PROFESSIONAL ENGINEER. A SEALED TYPE WRITTEN REPORT SHALL BE SUBMITTED TO THE ARCHITECT/ENGINEER.
20. ALL EQUIPMENT, DUCTS PIPING, AND OTHER DEVICES AND MATERIALS INSTALLED OUTSIDE OF THE BUILDING OR OTHERWISE EXPOSED TO THE WEATHER SHALL BE COMPLETELY WEATHERPROOFED.
21. MECHANICAL EQUIPMENT, DUCTS AND PIPING ARE TO BE COORDINATED WITH STRUCTURAL JOISTS AND CROSS BRACING.
22. ALL EXPOSED PIPING IN OCCUPIED SPACES SUBJECT TO ARCHITECTURAL APPROVAL PRIOR TO INSTALLATION.

LICENSED PROFESSIONAL ENGINEER
SIYAR GALSTYAN
M-39730
EXP. 12/31/25
MECHANICAL
STATE OF CALIFORNIA

Stantec
801 S. Figueroa Street, Suite 300
Los Angeles, CA 90017

Copyright Reserved
This Contract or shall not be responsible for all dimensions. DO NOT SCALE THE DRAWING - in the event or omission shall be reported to Stantec without delay.
This drawing is the property of Stantec and shall not be reproduced in whole or in part. Reproduction or use for any purpose other than that authorized by Stantec is forbidden.

REVISION	DESCRIPTION	DATE
	100% RESUBMITTAL	5/13/2024
	100% CONSTRUCTION DRAWING SUBMITTAL	3/27/2024
	90% UPDATED CONSTRUCTION SUBMITTAL	2/13/2024
	90% CONSTRUCTION DRAWING SUBMITTAL	12/07/2023

REPLACEMENT OF MECHANICAL UNITS AT SANTA ANA BUS BASE
4301 W. MAC ARTHUR BLVD., SANTA ANA, CA

PROJECT NOTES AND SHEET INDEX

JOB #:	
DESIGN BY:	SG
DRAWN BY:	RW
CHECKED BY:	GY
DATE:	
SCALE:	12" = 1'-0"
SHEET:	M-002M

OCTA
ORANGE COUNTY TRANSPORTATION AUTHORITY
550 SOUTH MAIN STREET, ORANGE, CA

Autodesk Docs://2014233703_Santa_Ana_Bus/mech_SantaAnaBus_2014233703.rvt
5/8/2024 11:15:01 AM

IFB 4-2550 EXHIBIT B

FAN SCHEDULE

UNIT IDENTIFICATION									FAN WHEEL			FAN MOTOR				ELECTRICAL										
MARK	NUMBER	BUILDING	UNIT/AREA SERVED	APPLICATION	MAX AIRFLOW (CFM)	MIN AIRFLOW (CFM)	ESP (IN-WG)	DRIVE TYPE	TYPE	ARRANGEMENT	SPEED (RPM)	BHP	HP	SPEED (RPM)	DRIVE TYPE	V / PH	FLA	MCA	MOP	OPERATING WEIGHT (LBS.)	CURB ADAPTER REQUIRED	EXISTING CURB SIZE	NEW CURB SIZE	MANUFACTURER	MODEL NUMBER	NOTES
EF	4-1	OREPATIONS	OPER BLDG REST RM	EXHAUST	540	-	0.5	ECM	CENTRIFUGAL	UPBLAST	1,300	0.10	1/4	1,725	DIRECT	115 / 1	2.9	4.00	15	45	N	-	-	GREENHECK	CUE-099-VG	1-6, 9
EF	4-2	OPERATIONS	OPER BLDG MEN'S RM	EXHAUST	1,100	-	0.5	ECM	CENTRIFUGAL	UPBLAST	1,690	0.27	1/4	1,725	DIRECT	115 / 1	3.5	4.00	15	54	N	-	-	GREENHECK	CUE-100-VG	1-6, 9
EF	4-3	OPERATIONS	OPER BLDG ELEC RM 103	EXHAUST	700	-	0.5	ECM	CENTRIFUGAL	UPBLAST	1,330	0.13	1/4	1,725	DIRECT	115 / 1	3.5	4.00	15	54	N	-	-	GREENHECK	CUE-100-VG	1-6, 9
EF	4-4	OPERATIONS	OPER BLDG LOCKER	EXHAUST	320	-	0.5	ECM	CENTRIFUGAL	UPBLAST	1,525	0.08	1/10	1,725	DIRECT	115 / 1	1.5	2.00	15	34	N	-	-	GREENHECK	CUE-090-VG	1-6, 9
SF	4-1	OPERATIONS	ELEC RM 103	SUPPLY	700	-	0.37	ECM	CENTRIFUGAL	ROOF SUPPLY	681	0.10	1/4	1,725	BELT	115 / 1	5.8	7.25	15	175	N	-	-	GREENHECK	RSF-90-4	1-6, 8
EF	5-1	MAINTENANCE	RUNNING REPAIR RM 181	EXHAUST	40,000	20,000	1.0	VFD	CENTRIFUGAL	UPBLAST	951	hh	25	1,725	BELT	460 / 3	34.0	42.50	70	2,350	Y	72 x 72	66 x 66	GREENHECK	QEI-40	1-6, 7
EF	5-2	MAINTENANCE	RM 181	EXHAUST	30,000	15,000	1.0	VFD	CENTRIFUGAL	UPBLAST	969	14.11	15	1,725	BELT	460 / 3	21.0	26.20	45	1,880	Y	64 x 64	60 x 60	GREENHECK	QEI-36	1-6, 7
EF	5-3	MAINTENANCE	RM 178	EXHAUST	28,000	14,000	1.0	VFD	CENTRIFUGAL	UPBLAST	916	12.10	15	1,725	BELT	460 / 3	21.0	26.20	45	1,880	Y	64 x 64	60 x 60	GREENHECK	QEI-36	1-6, 7
EF	5-4	MAINTENANCE	RM 178	EXHAUST	28,000	14,000	1.0	VFD	CENTRIFUGAL	UPBLAST	916	12.10	15	1,725	BELT	460 / 3	21.0	26.20	45	1,880	Y	64 x 64	60 x 60	GREENHECK	QEI-36	1-6, 7
EF	5-5	MAINTENANCE	RM 178	EXHAUST	30,000	15,000	1.0	VFD	CENTRIFUGAL	UPBLAST	969	14.11	15	1,725	BELT	460 / 3	21.0	26.20	45	1,880	Y	64 x 64	60 x 60	GREENHECK	QEI-36	1-6, 7
EF	5-6	MAINTENANCE	STEAM CLEANER	EXHAUST	10,000	5,000	1.0	VFD	CENTRIFUGAL	UPBLAST	1,433	4.16	5	1,725	BELT	460 / 3	7.6	9.50	15	617	Y	40 x 40	38.5 x 38.5	GREENHECK	QEI-22	1-6, 7
EF	5-7	MAINTENANCE	PARTS RM 135	EXHAUST	5,950	-	0.5	VFD	CENTRIFUGAL	UPBLAST	888	1.75	2	1,725	BELT	460 / 3	3.4	4.25	15	165	N	-	-	GREENHECK	CUBE-220-20	1-6, 9
EF	5-8	MAINTENANCE	PARTS RM 135	EXHAUST	5,950	-	0.5	VFD	CENTRIFUGAL	UPBLAST	888	1.75	2	1,725	BELT	460 / 3	3.4	4.25	15	165	N	-	-	GREENHECK	CUBE-220-20	1-6, 9
EF	5-9	MAINTENANCE	PARTS RM 135	EXHAUST	5,950	-	0.5	VFD	CENTRIFUGAL	UPBLAST	888	1.75	2	1,725	BELT	460 / 3	3.4	4.25	15	165	N	-	-	GREENHECK	CUBE-220-20	1-6, 9
EF	5-10	MAINTENANCE	PARTS RM 135	EXHAUST	5,950	-	0.5	VFD	CENTRIFUGAL	UPBLAST	888	1.75	2	1,725	BELT	460 / 3	3.4	4.25	15	165	N	-	-	GREENHECK	CUBE-220-20	1-6, 9
EF	5-11	MAINTENANCE	JAN RM 219	EXHAUST	80	-	0.3	ECM	CENTRIFUGAL	UPBLAST	1,453	0.02	1/15	1,725	DIRECT	115 / 1	1.3	2.00	15	28	N	-	-	GREENHECK	CUE-060-VG	1-6, 9
(E) EF	*5-12*	MAINTENANCE	*MEN'S RM 214, WOMEN 213*	*EXHAUST*	*500*	-	*EXISTING TO REMAIN*														*N*	-	-	*DAYTON*	*5DVP0*	10
EF	5-13	MAINTENANCE	MEN'S RM 109	EXHAUST	750	-	0.6	ECM	CENTRIFUGAL	UPBLAST	1,435	0.16	1/4	1,725	DIRECT	115 / 1	3.5	4.00	15	54	N	-	-	GREENHECK	CUE-100-VG	1-6, 9
(E) EF	*5-14*	MAINTENANCE	*WOMEN/SH RM 115*	*EXHAUST*	*660*	-	*EXISTING TO REMAIN*														*N*	-	-	*DAYTON*	*20FT11*	10
(E) EF	*5-15*	MAINTENANCE	*JAN RM 114*	*EXHAUST*	*315*	-	*EXISTING TO REMAIN*														*N*	-	-	*DAYTON*	*5DVP0*	10
EF	5-16	MAINTENANCE	REBUILT RM 106	EXHAUST	6,200	3,100	0.5	VFD	CENTRIFUGAL	UPBLAST	838	1.60	2	1,725	BELT	460 / 3	3.4	4.25	15	165	N	-	-	GREENHECK	CUBE-240-20	1-6, 9
EF	5-17	MAINTENANCE	REBUILT RM 107	EXHAUST	6,200	3,100	0.5	VFD	CENTRIFUGAL	UPBLAST	838	1.60	2	1,725	BELT	460 / 3	3.4	4.25	15	165	N	-	-	GREENHECK	CUBE-240-20	1-6, 9
EF	5-18	MAINTENANCE	REBUILT RM 108	EXHAUST	6,200	3,100	0.5	VFD	CENTRIFUGAL	UPBLAST	838	1.60	2	1,725	BELT	460 / 3	3.4	4.25	15	165	N	-	-	GREENHECK	CUBE-240-20	1-6, 9
EF	5-19	MAINTENANCE	BREAK RM 121	EXHAUST	3,500	-	0.5	VFD	CENTRIFUGAL	UPBLAST	968	1.11	1 1/2	1,725	BELT	460 / 3	3.0	3.75	15	140	N	-	-	GREENHECK	CUBE-200-15	1-6, 9
EF	5-20	MAINTENANCE	CLEAN SHOP 141	EXHAUST	2,600	-	0.5	VFD	CENTRIFUGAL	UPBLAST	1,635	0.87	1	1,725	BELT	460 / 3	2.1	2.63	15	97	N	-	-	GREENHECK	CUBE-140-10	1-6, 9
EF	5-21	MAINTENANCE	MACHINE RM 144	EXHAUST	3,100	-	0.5	VFD	CENTRIFUGAL	UPBLAST	1,053	0.78	1	1,725	BELT	460 / 3	2.1	2.63	15	132	N	-	-	GREENHECK	CUBE-180-10	1-6, 9
EF	5-22	MAINTENANCE	MACHINE RM 145	EXHAUST	3,100	-	0.5	VFD	CENTRIFUGAL	UPBLAST	1,053	0.78	1	1,725	BELT	460 / 3	2.1	2.63	15	132	N	-	-	GREENHECK	CUBE-180-10	1-6, 9
(E) EF	*5-23*	MAINTENANCE	*COMP REP RM 143*	*EXHAUST*	*1,200*	-	*EXISTING TO REMAIN*														*N*	-	-	*DAYTON*	-	10
EF	5-24	MAINTENANCE	BLDG MAINT. RM 150	EXHAUST	2,330	-	0.5	ECM	CENTRIFUGAL	UPBLAST	1,501	0.64	3/4	1,725	DIRECT	115 / 1	8.8	11.00	15	76	N	-	-	GREENHECK	CUE-140-VG	1-6, 9
EF	5-25	MAINTENANCE	COMP EXCH. RM 148	EXHAUST	16,000	8,000	1.0	VFD	CENTRIFUGAL	UPBLAST	1,255	7.06	7 1/2	1,725	BELT	460 / 3	11.0	13.80	20	885	Y	46 x 46	46.5 x 46.5	GREENHECK	QEI-27	1-6, 7
EF	5-26	MAINTENANCE	REV. TOIL. RM 160/161	EXHAUST	300	-	0.5	ECM	CENTRIFUGAL	UPBLAST	1,621	0.10	1/10	1,725	DIRECT	115 / 3	1.5	2.00	15	34	N	-	-	GREENHECK	CUE-090-VG	1-6, 9
(E) EF	*5-27*	MAINTENANCE	*LOCKER RM 167*	*EXHAUST*	*140*	-	*EXISTING TO REMAIN*														*N*	-	-	*DAYTON*	*5DVN6*	10
EF	5-28	MAINTENANCE	BODY SHOP RM 174	EXHAUST	36,960	18,480	1.0	VFD	CENTRIFUGAL	UPBLAST	1,013	17.45	20	1,725	BELT	460 / 3	27.0	33.80	60	1,013	Y	64 x 64	64.5 x 64.5	GREENHECK	QEI-40	1-6, 7
EF	5-29	MAINTENANCE	STORAGE RM 155	EXHAUST	2,500	-	0.5	ECM	CENTRIFUGAL	UPBLAST	1,115	0.54	3/4	1,200	DIRECT	115 / 1	8.8	11.00	15	84	N	-	-	GREENHECK	CUE-160-VG	1-6
(E) EF	*5-30*	MAINTENANCE	*TEL RM 136*	*EXHAUST*	*285*	-	*EXISTING TO REMAIN*														*N*	-	-	*DAYTON*	*5DVP6*	10
EF	5-31	MAINTENANCE	ELEC RM 137	EXHAUST	3,000	-	0.65	ECM	CENTRIFUGAL	UPBLAST	1,406	1.07	2	1,725	DIRECT	460 / 3	3.2	4.00	15	119	N	-	-	GREENHECK	CUE-160-VG	1-6, 9
EF	5-32	MAINTENANCE	LUBE RM 138	EXHAUST	410	-	0.5	ECM	CENTRIFUGAL	UPBLAST	1,621	0.10	1/10	1,725	DIRECT	115 / 3	1.5	2.00	15	34	N	-	-	GREENHECK	CUE-090-VG	1-6, 9
EF	5-33	MAINTENANCE	C.A. RM 139	EXHAUST	6,500	-	1.0	VFD	CENTRIFUGAL	UPBLAST	1,185	2.78	3	1,725	BELT	460 / 3	4.8	6.00	15	203	N	-	-	GREENHECK	CUBE-240HP-30	1-6
EF	5-34	MAINTENANCE	ELEC RM 185	EXHAUST	2,850	-	0.5	ECM	CENTRIFUGAL	UPBLAST	1,312	0.87	2	1,725	DIRECT	460 / 3	3.2	4.00	15	119	N	-	-	GREENHECK	CUE-160-VG	1-6, 9
EF	5-35	MAINTENANCE	ELEC RM 184	EXHAUST	1,300	-	0.63	ECM	CENTRIFUGAL	UPBLAST	1,425	0.33	1/2	1,450	DIRECT	115 / 1	6.4	8.00	15	37	N	-	-	GREENHECK	CUE-130-VG	1-6, 9
(E) EF	*5-36*	MAINTENANCE	*ELEC RM 220*	*EXHAUST*	-	-	*EXISTING TO REMAIN*														*N*	-	-	*DAYTON*	*4HZ45G*	10
EF	5-37	MAINTENANCE	ENG. DYN. RM 103	EXHAUST	15,000	7,500	1.0	VFD	CENTRIFUGAL	UPBLAST	1,191	6.15	7 1/2	1,725	BELT	460 / 3	11.0	13.80	20	886	Y	46 x 46	46.5 x 46.5	GREENHECK	QEI-27	1-6, 9
EF	5-38	MAINTENANCE	TRAN DYN. RM 105	EXHAUST	850	-	0.5	ECM	CENTRIFUGAL	UPBLAST	1,448	0.17	1/4	1,725	DIRECT	115 / 1	3.5	4.00	15	54	N	-	-	GREENHECK	CUE-100-VG	1-6, 9
EF	5-39	MAINTENANCE	EQUIP. STOR. RM 129	EXHAUST	375	-	0.5	ECM	CENTRIFUGAL	UPBLAST	1,525	0.10	1/6	1,725	DIRECT	115 / 1	2.3	3.00	15	40	N	-	-	GREENHECK	CUE-095-VG	1-6, 9
EF	5-40	MAINTENANCE	LOADING ABY RM 170	EXHAUST	1,100	-	0.5	ECM	CENTRIFUGAL	UPBLAST	1,328	0.22	1/4	1,400	DIRECT	115 / 1	3.5	4.00	15	57	N	-	-	GREENHECK	CUE-120-VG	1-6, 9
EF	5-41	MAINTENANCE	UPHOLSTRY SHOP RM 151	EXHAUST	990	-	0.5	ECM	CENTRIFUGAL	UPBLAST	984	0.17	1/4	1,000	DIRECT	115 / 1	3.5	4.00	15	72	N	-	-	GREENHECK	CUE-140-VG	1-6, 9
EF	5-42	MAINTENANCE	FUEL RM 102	EXHAUST	650	-	1.0	ECM	CENTRIFUGAL	UPBLAST	1,633	0.18	1/4	1,770	DIRECT	115 / 1		7.25	15	95	N	-	-	GREENHECK	USF-8-VG	1-6, 9
(E) EF	*5-43*	MAINTENANCE	*PAINT BOOTH*	*EXHAUST*	-	-	*EXISTING TO REMAIN*														N	-	-	*NEW YORK BLOWER*	*PLR-33*	10
SF	5-1	MAINTENANCE	PARTS RM 135	SUPPLY	7,330	-	1.0	VFD	CENTRIFUGAL	ROOF SUPPLY	564	2.52	3	1,725	BELT	460 / 3	4.8	6.00	15	766	N	-	-	GREENHECK	RSF-200-30	1-6, 8
SF	5-2	MAINTENANCE	PARTS RM 135	SUPPLY	7,330	-	1.0	VFD	CENTRIFUGAL	ROOF SUPPLY	564	2.52	3	1,725	BELT	460 / 3	4.8	6.00	15	766	N	-	-	GREENHECK	RSF-200-30	1-6, 8
SF	5-3	MAINTENANCE	PARTS RM 135	SUPPLY	7,330	-	1.0	VFD	CENTRIFUGAL	ROOF SUPPLY	564	2.52	3	1,725	BELT	460 / 3	4.8	6.00	15	766	N	-	-	GREENHECK	RSF-200-30	1-6, 8
SF	5-4	MAINTENANCE	REBUILT RM 106	SUPPLY	9,200	-	1.0	VFD	CENTRIFUGAL	ROOF SUPPLY	605	3.87	5	1,725	BELT	460 / 3	7.6	9.50	15	783	N	-	-	GREENHECK	RSF-200-50	1-6, 8
SF	5-5	MAINTENANCE	BRAKE RM 121	SUPPLY	3,200	-	1.0	VFD	CENTRIFUGAL	ROOF SUPPLY	979	1.42	1.5	1,752	BELT	460 / 3	3.0	3.75	15	307	N	-	-	GREENHECK	RSF-120-15	1-6, 8
SF	5-6	MAINTENANCE	CLEAN SHOP RM 141	SUPPLY	2,400	-	1.0	VFD	CENTRIFUGAL	ROOF SUPPLY	896	0.86	1	1,725	BELT	460 / 3	2.1	2.63	15	302	Y	30 x 30	34 x 34	GREENHECK	RSF-120-10	1-6, 8
(E) SF	*5-7*	MAINTENANCE	*MECH SHOP RM 144*	*EXHAUST*	*3,000*	-	*EXISTING TO REMAIN*														*N*	-	-	*DAYTON*	*5AU56*	10
SF	5-8	MAINTENANCE	COMP. SHOP. RM 143	SUPPLY	1,300	-	1.0	VFD	CENTRIFUGAL	ROOF SUPPLY	1,274	0.57	3/4	1,725	BELT	460 / 3	1.6	2.00	15	199	N	-	-	GREENHECK	RSF-90-7	1-6, 8
SF	5-9	MAINTENANCE	BLDG MAINT. RM 150	SUPPLY	4,000	-	1.0	VFD	CENTRIFUGAL	ROOF SUPPLY	855	1.93	2	1,725	BELT	460 / 3	3.4	4.25	15	427	N	-	-	GREENHECK	RSF-150-20	1-6, 8
SF	5-10	MAINTENANCE	STORAGE RM 155	SUPPLY	2,500	-	1.0	VFD	CENTRIFUGAL	ROOF SUPPLY	905	0.92	1	1,725	BELT	460 / 3	2.1	2.63	15	302	Y	30 x 30	34 x 34	GREENHECK	RSF-120-10	1-6, 8
(E) SF	*5-11*	MAINTENANCE	*ELEC RM 137*	*EXHAUST*	*3,000*	-	*EXISTING TO REMAIN*														*N*	-	-	*DAYTON*	*SAU56*	10
SF	5-12	MAINTENANCE	ELEC RM 185	SUPPLY	850	-	0.5	VFD	CENTRIFUGAL	ROOF SUPPLY	844	0.18	1/2	1,725	BELT	460 / 3	1.1	1.38	15	194	N	-	-	GREENHECK	RSF-90-5	1-6, 8
SF	5-13	MAINTENANCE	ELEC RM 184	SUPPLY	1,200	-	0.8	VFD	CENTRIFUGAL	ROOF SUPPLY	1,147	0.43	1/2	1,725	BELT	460 / 3	1.1	1.38	15	196	N	-	-	GREENHECK	RSF-90-5	1-6, 8
SF	5-14	MAINTENANCE	ELEC RM 220	SUPPLY	3,100	-	1.0	VFD	CENTRIFUGAL	ROOF SUPPLY	968	1.34	1 1/2	1,725	BELT	460 / 3	3.0	3.75	15	307	N	-	-	GREENHECK	RSF-120-5	1-6, 8
SF	5-15	MAINTENANCE	TRAN DYN. RM 105	SUPPLY	820	-	0.4	VFD	CENTRIFUGAL	ROOF SUPPLY	764	0.15	1/2	1,725	BELT	460 / 3	1.1	1.38	15	194	N	-	-	GREENHECK	RSF-90-5	1-6, 8
SF	5-16	MAINTENANCE	LOADING ABY RM 170	SUPPLY	1,200	-	0.8	VFD	CENTRIFUGAL	ROOF SUPPLY	1,147	0.43	1/2	1,725	BELT	460 / 3	1.1	1.38	15	196	N	-	-	GREENHECK	RSF-90-5	1-6, 9
EF	6-1	FUEL/BRAKE	BRAKE/BST RM 114/001	EXHAUST	31,000	-	1.0	VFD	CENTRIFUGAL	UPBLAST	996	15.20	20	1,725	BELT	460 / 3	27.0	33.80	60	1,900	Y	64 x 64	60 x 60	GREENHECK	QEI-36	1-6, 7
EF	6-2	FUEL/BRAKE	FUEL AREA RM 115	EXHAUST	26,000	-	1.0	VFD	CENTRIFUGAL	UPBLAST	1,130	13.44	15	1,725	BELT	460 / 3	21.0	26.20	45	1,610	Y	58 x 58	54.5 x 54.5	GREENHECK	QEI-33	1-6, 7
EF	6-3	FUEL/BRAKE	BODY/SHOP 118/116	EXHAUST	18,000	-	1.0	VFD	CENTRIFUGAL	UPBLAST	1,384	9.21	10	1,725	BELT	460 / 3	14.0	17.50	30	912	Y	46 x 46	46.5 x 46.5	GREENHECK	QEI-27	1-6, 7
EF	6-4	FUEL/BRAKE	MEN'S RM	EXHAUST	120	-	0.25	ECM	CENTRIFUGAL	UPBLAST	1,691	0.03	1/15	1,725	DIRECT	115 / 1	1.3	2.00	15	28	N	-	-	GREENHECK	CUE-060-VG	1-6, 9
(E) EF	*6-5*	FUEL/BRAKE	*WOMEN'S RM*	*EXHAUST*	*100*	-	*EXISTING TO REMAIN*														*N*	-	-	*DAYTON*	*5DVN8*	10
EF	6-6	FUEL/BRAKE	LOCKER/LAUNDRY	EXHAUST	230	-	0.5	ECM	CENTRIFUGAL	UPBLAST	1,638	0.06	1/10	1,725	DIRECT	115 / 1	1.5	2.00	15	37	N	-	-	GREENHECK	CUE-080-VG	1-6, 9
EF	6-7	FUEL/BRAKE	C.A. 111/TEL. 112	EXHAUST	7,000	-	0.5	VFD	CENTRIFUGAL	UPBLAST	1,180	2.55	3	1,725	BELT	460 / 3	4.8	6.00	15	203	N	-	-	GREENHECK	CUBE-240HP-30	1-6, 9
EF	6-8	FUEL/BRAKE	FLUID TANK 110/GREESE TANK 109	EXHAUST	440	-	0.25	ECM	CENTRIFUGAL	UPBLAST	1,388	0.06	1/10	1,725	DIRECT	115 / 1	1.5	2.00	15	34	N	-	-	GREENHECK	CUE-90-VG	1-6, 9
EF	6-9	FUEL/BRAKE	FUEL RM 115	EXHAUST	1,500	-	0.75	ECM	CENTRIFUGAL	UPBLAST	1,268	0.38	1/2	1,300	DIRECT	115 / 1	6.4	8.00	15	73	N	-	-	GREENHECK	CUE-140-VG	1-6, 9
SF	6-1	FUEL/BRAKE	TIRE BAY RM 116	SUPPLY	9,000	-	1.0	VFD	CENTRIFUGAL	ROOF SUPPLY	BELT	3.69	5	1,725	BELT	460 / 3	7.6	9.50	15	783	N	-	-	GREENHECK	RSF-200-50	1-6, 8
SF	6-2	FUEL/BRAKE	BASEMENT 001	SUPPLY	4,000	-	1.0	VFD	CENTRIFUGAL	ROOF SUPPLY	855	1.93	2	1,725	BELT	460 / 3	3.4	4.25	15	427	N	-	-	GREENHECK	RSF-150-20	1-6, 8
EF	7-1	BUS WASH	BUS WASH	EXHAUST	8,000	-	0.5	VFD	CENTRIFUGAL	UPBLAST	601	1.59	2	1,725	BELT	460 / 3	3.4	4.25	15	206	N	-	-	GREENHECK	CUBE-300-20	1-6, 7
EF	7-2	BUS WASH	BUS WASH	EXHAUST	4,000	-	0.5	VFD	CENTRIFUGAL	UPBLAST	1,321	1.52	2	1,725	BELT	460 / 3	3.4	4.25	15	141	N	-	-	GREENHECK	CUBE-180-20	1-6, 9
EF	8-1	DETAILING	DETAILING/CLEANIN EQUIP. RM	EXHAUST	750	-	0.5	ECM	CENTRIFUGAL	UPBLAST	1,502	0.16	1/4	1,725	DIRECT	115 / 1	2.9	4.00	15	45	N	-	-	GREENHECK	CUE-099-VG	1-6, 9

NOTES:
1. CONTRACTOR TO VERIFY EXISTING ROOF CURB SIZE AND PROVIDE CURB ADAPTER AS NECESSARY FOR NEW FAN.
2. CONTRACTOR TO VERIFY THAT EXISTING ELECTRICAL SERVICE IS ADEQUATE FOR NEW FAN.
3. PROVIDE WITH DISCONNECT, BY DIV 26.
4. PROVIDE WITH BACKDRAFT DAMPER. LISTED MAX ETERNAL STATIC PRESSURE [EXCLUDES/INCLUDES] DAMPER. - FOR EXHAUST FANS ONLY.
5. PROVIDE WITH NEMA PREMIUM EFFICIENCY MOTORS.
6. PROVIDE WITH WEATHERPROOF CONSTRUCTION.
7. EQUIPMENT FURNISHED WITH BACK DRAFT DAMPER, DUCT ADAPTERS, TWO SPEED, 2-WINDING FAN MOTOR. INTERLOCK WITH FUTURE LNG SYSTEM.
8. PROVIDE WITH DUCT ADAPTER, BACKDRAFT DAMPER, DISCONNECT SWITCH, SMOKE DETECTOR, S'TAT AND FILTERS.
9. EQUIPMENT BACKDRAFT DAMPER AND DISCONNECT SWITCH.
10. EXISTING EQUIPMENT TO REMAIN.

Autodesk Docs://2014233703_Santa_Ana_Bus/mech_SantaAnaBus_2014233703.rvt

5/8/2024 11:15:02 AM

Stantec
801 S. Figueroa Street, Suite 300
Los Angeles, CA 90017

Copyright Reserved
The Contractor shall verify and be responsible for all dimensions. DO NOT scale the drawing - any errors or omissions shall be reported to Stantec without delay.
The Copyrights to all designs and drawings are the property of Stantec. Reproduction or use for any purpose other than that authorized by Stantec is forbidden.

REVISION	DESCRIPTION	DATE
	100% RESUBMITTAL	5/13/2024
	100% CONSTRUCTION DRAWING SUBMITTAL	3/27/2024
	90% UPDATED CONSTRUCTION SUBMITTAL	2/13/2024
	90% CONSTRUCTION DRAWING SUBMITTAL	12/07/2023

REPLACEMENT OF MECHANICAL UNITS AT SANTA ANA BUS BASE
4301 W. MAC ARTHUR BLVD., SANTA ANA, CA

FAN SCHEDULE

JOB #:
DESIGN BY: SG
DRAWN BY: RW
CHECKED BY: GY
DATE:
SCALE:
SHEET: **M-003M**

OCTA
ORANGE COUNTY
TRANSPORTATION AUTHORITY
550 SOUTH MAIN STREET, ORANGE, CA

PACKAGED ROOFTOP UNIT SCHEDULE

UNIT IDENTIFICATION					FAN DATA				COIL DATA												EFFICIENCY			ELECTRICAL				UNIT DIMENSIONS							
					INDOOR			OUTDOOR			DX COOLING COIL							HEATING COIL																
MARK	NUMBER	TYPE	BUILDING	AREA SERVED	FAN DRIVE TYPE	DESIGN AIRFLOW (CFM)	DESIGN ESP (INWC)	FAN DRIVE TYPE	AMBIENT DRY BULB	MINIMUM OUTSIDE AIR (CFM)	REFRIG.	TOTAL COOLING CAPACITY (BTU/H)	SENS. COOLING CAPACITY...	ENTERING DB (F)	ENTERING WB (F)	LEAVING DB (F)	LEAVING WB (F)	OUTPUT HEATING CAPACITY	ENTERIN G DB (F)	LEAVING DB (F)	HSPF	EER	SEER	V / PH	SYSTE M POWER (kW)	MCA	MOP	OPERATING WEIGHT (LBS)	HEIGHT (FT)	WIDTH (FT)	LENGTH (FT)	CURB ADAPTER MODEL	MANUFACTURER	MODEL	NOTES
RTU	4-1	PACKAGED RTU	OPERATIONS	NORTH	VARIABLE DIRECT	4,830	1	DIRECT	95	740	R-410A	178,000	125500	80	67	55	54	202	70	108	-	11	14.6	460 / 3	17.4	41.0	50	1,925	5	7.5	10.5	CA-TRN-593-TRN-592-...	TRANE	YSJ1804S0L	ALL
RTU	4-2	PACKAGED RTU	OPERATIONS	CENTRAL NORTH	VARIABLE DIRECT	2,350	1	DIRECT	95	100	R-410A	74,000	55,000	80	67	56	56	65	70	95	-	11	14.6	460 / 3	7.1	18.0	20	968	4.2	4.4	7.3	-	TRANE	YSJ072A4S0L	ALL
RTU	4-3	PACKAGED RTU	OPERATIONS	CENTRAL SOUTH	VARIABLE DIRECT	4,100	1	DIRECT	95	885	R-410A	118,000	91,000	80	67	58	57	121	70	97	-	11	14.6	460 / 3	11.8	29.0	40	1,020	4.2	4.4	7.3	-	TRANE	YSJ120A4S0L	ALL
RTU	4-4	PACKAGED RTU	OPERATIONS	SOUTH	VARIABLE DIRECT	4,000	1	DIRECT	95	940	R-410A	119,000	92,000	80	67	58	57	121	70	97	-	11	14.6	460 / 3	10.5	25.0	30	995	4.2	4.4	7.3	-	TRANE	YSJ102A4S0L	ALL
RTU	5-1	PACKAGED RTU	MAINTENANCE	2ND FLR OFFICES	VARIABLE DIRECT	5,910	1	DIRECT	95	830	R-410A	182,080	149,000	75	61	50	49	202	70	101	-	10.8	14.0	460 / 3	19.7	49.0	60	1,954	5	7.5	10.5	-	TRANE	YSJ210A4S0L	ALL
RTU	5-2	PACKAGED RTU	MAINTENANCE	BREAK ROOM	VARIABLE DIRECT	5,040	1	DIRECT	95	1,115	R-410A	179,000	128,000	80	67	56	55	202	70	104	-	10.8	14.0	460 / 3	17.6	41.0	50	1,924	5	7.5	10.5	-	TRANE	YSJ1804S0L	ALL
RTU	5-3	PACKAGED RTU	MAINTENANCE	REVENUE OFFICES	VARIABLE DIRECT	5,400	1	DIRECT	95	1,250	R-410A	180,000	132,000	80	67	56	55	202	70	104	-	10.8	14.0	460 / 3	17.6	41.0	50	1,924	5	7.5	10.5	-	TRANE	YSJ1804S0L	ALL
RTU	5-4	PACKAGED AC	MAINTENANCE	OFFICE	VARIABLE DIRECT	770	1	DIRECT	95	30	R-410A	23,800	6,600	80	67	55	53	23,200	70	95	7	11	13.4	208 / 1	1.8	20.6	30	328	3.3	3.75	4.9	CA-TRN-1213-TRN-59...	TRANE	4WCC4048E1000A	ALL
RTU	5-5	PACKAGED AC	MAINTENANCE	OFFICE	VARIABLE DIRECT	770	1	DIRECT	95	50	R-410A	23,800	9,300	80	67	55	53	23,200	70	95	7	11	13.4	208 / 1	1.8	20.6	30	328	3.3	3.75	4.9	CA-TRN-1213-TRN-59...	TRANE	4WCC4048E1000A	ALL
RTU	6-1	PACKAGED AC	FUEL/BRAKE	OFFICE	VARIABLE DIRECT	1,570	0.5	DIRECT	95	135	R-410A	47,000	42,000	80	67	55	53	45,000	70	95	7	11	13.4	208 / 1	4.1	31.9	50	425	4.1	4	5.1	CA-TRN-1235-TRN-5750	TRANE	4WCC4048E1000A	ALL

NOTES:
1. CONTRACTOR TO VERIFY EXISTING ROOF CURB SIZE AND PROVIDE CURB ADAPTER MODEL PER SCHEDULE FOR NEW EQUIPMENT.
2. PROVIDE WITH INTERMITTENT IGNITION DEVICE (IID)
3. FILTERS ARE TO BE PROVIDED WITH PRE-FILTER. MAXIMUM PRESSURE DROP SHALL BE BASED ON TOTAL PRESSURE DROP ACROSS THE FILTER BANK WITH DIRTY FILTERS.
4. PROVIDE WITH 100% MODULATING DRY-BULB TYPE AIR ECONOMIZER.
5. DISCONNECT PROVIDED BY DIVISION 26 CONTRACTOR.
6. PROVIDE SCCR RATINGS GREATER THAN FAULT AMPS SHOWN ON ELECTRICAL DRAWINGS.
7. PROVIDE SUPPLY AND POWERED EXHAUST FANS WITH VFD- BY RTU MANUFACTURER.
8. UNIT SHALL COMPLY WITH ECONOMIZER FAULT DETECTION AND DIAGNOSTICS (FDD) REQUIREMENTS PER CALIFORNIA TITLE 24, PART 6.
9. PROVIDE WITH DUCT SMOKE DETECTOR FOR AUTOMATIC UNIT SHUT OFF. FURNISHED AND WIRED BY DIV 26 CONTRACTOR. ISNTALLED BY DIV 23 CONTRACTOR.
10. LISTED UNIT OPERATING WEIGHT EXCLUDES CURB.
11. UNIT TO BE BACNET COMPATIBLE AND SHALL BE TIED TO THE EXISTING ENERGY MANAGEMENT CONTROL SYSTEM (EMCS).
12. PROVIDE VIBRATION ISOLATION AND SEISMIC RESTRAINT.
13. PROVIDE INVERTER-READY NEMA PREMIUM EFFICIENCY MOTOR WITH SHAFT GROUNDING SYSTEM.
14. PROVIDE A PROGRAMMABLE THERMOSTAT WITH TEMPERATURE SETPOINTS FOR AT LEAST FOUR SCHEDULING PERIODS WITHIN 24 HOURS.
15. PROVIDE CONDENSER COIL GAURD.
16. PROVIDE WITH 115V FIELD POWERED SERVICE OUTLET.
17. PROVIDE WITH MERV-13 FILTER.

MAKEUP AIR UNIT SCHEDULE

UNIT IDENTIFICATION					SUPPLY FAN					HEATING			ELECTRICAL				PHYSICAL CHARACTERISTICS							
MARK	NUMBER	TYPE	BUILDING	AREA SERVED	SUPPLY AIR VOLUME (CFM)	TOTAL STATIC PRESSURE (IN. W.C.)	MOTOR TYPE	MOTOR POWER (HP)	MOTOR SPEED (RPM)	MAX INPUT (BTU/H)	FUEL TYPE	SUPPLY GAS PRESSURE (INWC)	UNIT VOLT / PH	FLA	CONTROL V / PH	CONTROL TRANSFORMER (VA)	UNIT OPERATING WEIGHT (LBS)	HEIGHT (IN)	WIDTH (IN)	LENGTH (IN)	CURB ADAPTER MODEL	MANUFACTURER	MODEL	NOTES
MAU	5-1	MAKEUP AIR UNIT	MAINTENANCE	RUNNING REPAIR, RM 181	20,000	3	BELT	20	1,800	838,000	NATURAL GAS	10 - 14	460 / 3	28.1	115 / 1	500	2,699	63	91	186	VIBREX SRC-125	TRANE	DFOA-125-HLB	1-10
MAU	5-2	MAKEUP AIR UNIT	MAINTENANCE	RUNNING REPAIR, RM 179	15,000	3	BELT	15	1,800	668,000	NATURAL GAS	10 - 14	460 / 3	22.1	115 / 1	500	1,958	51	78	166	VIBREX SRC-122	TRANE	DFOA-122-HRB	1-10
MAU	5-3	MAKEUP AIR UNIT	MAINTENANCE	RUNNING REPAIR, RM 179	14,000	3	BELT	15	1,800	623,000	NATURAL GAS	10 - 14	460 / 3	22.1	115 / 1	500	1,958	51	78	166	VIBREX SRC-122	TRANE	DFOA-122-HRB	1-10
MAU	5-4	MAKEUP AIR UNIT	MAINTENANCE	RUNNING REPAIR, RM 179	14,000	3	BELT	15	1,800	623,000	NATURAL GAS	10 - 14	460 / 3	22.1	115 / 1	500	1,958	51	78	166	VIBREX SRC-122	TRANE	DFOA-122-HRB	1-10
MAU	5-5	MAKEUP AIR UNIT	MAINTENANCE	RUNNING REPAIR, RM 179	15,000	3	BELT	15	1,800	668,000	NATURAL GAS	10 - 14	460 / 3	22.1	115 / 1	500	1,958	51	78	166	VIBREX SRC-122	TRANE	DFOA-125-HRB	1-10
MAU	5-6	MAKEUP AIR UNIT	MAINTENANCE	BODY SHOP, RM 174	17,700	3	BELT	15	1,800	788,000	NATURAL GAS	10 - 14	460 / 3	22.1	115 / 1	500	2,699	63	91	186	VIBREX SRC-125	TRANE	DFOA-125-HRB	1-10
MAU	5-7	MAKEUP AIR UNIT	MAINTENANCE	COMP. EXH., RM 148	6,000	3	BELT	7 1/2	1,800	223,000	NATURAL GAS	10 - 14	460 / 3	12.1	115 / 1	500	1,187	39	52	140	VIBREX SRC-115	TRANE	DFOA-115-HRB	1-10
MAU	5-8	MAKEUP AIR UNIT	MAINTENANCE	CORR., RM 101	2,400	3	BELT	3	1,800	175,000	NATURAL GAS	10 - 14	460 / 3	5.9	115 / 1	500	1,187	39	52	140	VIBREX SRC-109	TRANE	DFOA-109-HRB	1-10
(E) MAU	*5-9*	*MAKEUP AIR UNIT*	*MAINTENANCE*	*PAINT BOOTH*	*37,800*	*2*	-	-	-	-	-	-	-	-	-	-	-	-	-	-	-	-	-	*11*

NOTES:
1. PROVIDE WITH INLET HOOD
2. PROVIDE WITH SHUTOFF DAMPERS
3. PROVIDE WITH VIBRATION ISOLATORS
4. PROVIDE WITH PAINTED CABINET / ACCESSORIES
5. PROVIDE WITH DISCONNECT SWITCH BY DIVISION 26.
6. PROVIDE WITH REMOTE CONTROL STATION
7. PROVIDE WITH MRT TOUCH REMOTE CONTROL STATION.
8. PROVIDE WITH G-90 GALVANIZED STEEL FILTER.
9. CONTRACTOR TO VERIFY EXISTING ROOF CURB SIZE AND PROVIDE CURB ADAPTER MODEL PER SCHEDULE FOR NEW EQUIPMENT.
10. PROVIDE WITH EMERGENCY POWER OFF SWITCH.
11. EXISTING EQUIPMENT TO REMAIN.

LICENSED PROFESSIONAL ENGINEER SEVAK GALSTYAN M-39730 EXP. 12/31/25 MECHANICAL STATE OF CALIFORNIA

IFB 4-2550 EXHIBIT B

Stantec
801 S. Figueroa Street, Suite 300
Los Angeles, CA 90017

Copyright Reserved
The Contractor shall verify and be responsible for all dimensions. DO NOT scale the drawing - use dimensions as indicated or as required by Engineer without delay.
This drawing is the property of the Consultant and may not be reproduced or used for other purposes. Reproduction or use for any purpose other than that authorized by Stantec is forbidden.

REVISION	DESCRIPTION	DATE
	100% RESUBMITTAL	5/13/2024
	100% CONSTRUCTION DRAWING SUBMITTAL	3/27/2024
	90% UPDATED CONSTRUCTION SUBMITTAL	2/13/2024
	90% CONSTRUCTION DRAWING SUBMITTAL	12/07/2023

REPLACEMENT OF MECHANICAL UNITS AT SANTA ANA BUS BASE
4301 W. MAC ARTHUR BLVD., SANTA ANA, CA

ROOFTOP AND MAKEUP AIR UNITS SCHEDULES

JOB #:	
DESIGN BY:	SG
DRAWN BY:	RW
CHECKED BY:	GY
DATE:	
SCALE:	
SHEET:	M-004M

OCTA
ORANGE COUNTY TRANSPORTATION AUTHORITY
550 SOUTH MAIN STREET, ORANGE, CA

Autodesk Docs://2014233703_Santa_Ana_Bus/mech_SantaAnaBus_2014233703.rvt
5/8/2024 11:15:03 AM

PACKAGED HEAT PUMP SCHEDULE

UNIT IDENTIFICATION					FAN DATA			COIL DATA												EFFICIENCY		ELECTRICAL				UNIT DIMENSIONS							
											COOLING MODE						HEATING MODE																
MARK	NUMBER	TYPE	BUILDING	AREA SERVED	FAN DRIVE TYPE	DESIGN AIRFLOW (CFM)	DESIGN ESP (INWC)	AMBIENT DRY BULB (F)	MIN. OUTSIDE AIR (CFM)	REFRIG.	TOTAL COOLING CAPACITY (MBH)	POWER INPUT (kW)	ENTERING DB (F)	ENTERING WB (F)	LEAVING DB (F)	LEAVING WB (F)	OUTPUT HEATING CAPACITY	POWER INPUT (kW)	ENTERING DB (F)	LEAVING DB (F)	EER (BTU/WATT-HR)	SEER (BTU/WATT-HR)	V / PH	MCA	MOP	FILTER RATING	OPERATING WEIGHT (LBS)	HEIGHT (FT)	WIDTH (FT)	LENGTH (FT)	CURB ADAPTER MODEL	MANUFACTURER	MODEL	NOTES
HP	5-1	HEAT PUMP	MAINTENANCE	CONTROL	4-SPEED DIRECT	770	0.5	95	30	R-410A	23,800	2.09	76	62	55	54	23,200	1.95	70	95	11	13.4	208 / 1	20.6	30	MERV 13	328	46	45	52	-	TRANE	4WCC4024E1000A	ALL
HP	6-1	HEAT PUMP	FUEL/BRAKE	BLDG. OFFICE	4-SPEED DIRECT	770	0.5	95	30	R-410A	23,800	2.09	74	61	55	54	23,200	1.95	70	95	11	13.4	208 / 1	20.6	30	MERV 13	328	46	45	52	CA-TRN-1213-TRN-590-9	TRANE	4WCC4024E1000A	ALL

NOTES:
1. CONTRACTOR TO VERIFY EXISTING ROOF CURB SIZE AND PROVIDE CURB ADAPTER AS NECESSARY FOR NEW EQUIPMENT.
2. PROVIDE WITH INTERMITTENT IGNITION DEVICE (IID)
3. FILTERS ARE TO BE PROVIDED WITH PRE-FILTER. MAXIMUM PRESSURE DROP SHALL BE BASED ON TOTAL PRESSURE DROP ACROSS THE FILTER BANK WITH DIRTY FILTERS.
4. PROVIDE WITH 100% MODULATING DRY-BULB TYPE AIR ECONOMIZER.
5. DISCONNECT PROVIDED BY DICISION 26 CONTRACTOR.
6. PROVIDE SCCR RATINGS GREATER THAN FAULT AMPS SHOWN ON ELECTRICAL DRAWINGS.
7. PROVIDE SUPPLY AND POWERED EXHAUST FANS WITH VFD- BY RTU MANUFACTURER.
8. UNIT SHALL COMPLY WITH ECONOMIZER FAULT DETECTION AND DIAGNOSTICS (FDD) REQUIREMENTS PER CALIFORNIA TITLE 24, PART 6.
9. PROVIDE WITH DUCT SMOKE DETECTOR FOR AUTOMATIC UNIT SHUT OFF. FURNISHED AND WIRED BY DIV 26 CONTRACTOR. ISNTALLED BY DIV 23 CONTRACTOR.
10. LISTED UNIT OPERATING WEIGHT EXCLUDES CURB.
11. UNIT TO BE BACNET COMPATIBLE AND SHALL BE TIED TO THE EXISTING ENERGY MANAGEMENT CONTROL SYSTEM (EMCS).
12. PROVIDE VIBRATION ISOLATION AND SEISMIC RESTRAINT.
13. PROVIDE INVERTER-READY NEMA PREMIUM EFFICIENCY MOTOR WITH SHAFT GROUNDING SYSTEM.
14. PROVIDE A PROGRAMMABLE THERMOSTAT WITH TEMPERATURE SETPOINTS FOR AT LEAST FOUR SCHEDULING PERIODS WITHIN 24 HOURS.
15. PROVIDE CONDENSER COIL GAURD.
16. PROVIDE WITH 115V FIELD POWERED SERVICE OUTLET.

PACKAGED AIR CONDITIONER SCHEDULE

UNIT IDENTIFICATION					FAN DATA		COIL DATA			EFFICIENCY		ELECTRICAL				FILTER	UNIT DIMENSIONS							
MARK	NUMBER	TYPE	BUILDING	AREA SERVED	FAN DRIVE TYPE	DESIGN AIRFLOW (CFM)	AMBIENT DRY BULB (F)	REFRIGERANT	TOTAL COOLING CAPACITY (MBH)	EER	SEER	V / PH	SYSTEM POWER (kW)	MCA	MOP	FILTER RATING	OPERATING WEIGHT (LBS)	HEIGHT (IN)	WIDTH (IN)	LENGTH (IN)	CURB ADAPTER MODEL	MANUFACTURER	MODEL	NOTES
AC	4-1	PACKAGED COOLING UNIT	OPERATIONS	COMPUTER ROOM	4-SPEED DIRECT	785	95	R-410A	23,200	11	13.4	208 / 1	3.4	16.7	25	MERV 13	358	36	49	42	CA-TRN-1213-TRN-590-9	TRANE	4TCC4042E1000A	ALL
AC	4-2	PACKAGED COOLING UNIT	OPERATIONS	TELECOM ROOM	4-SPEED DIRECT	785	95	R-410A	23,200	11	13.4	208 / 1	3.4	16.7	25	MERV 13	358	36	49	42	-	TRANE	4TCC4042E1000A	ALL
AC	5-1	PACKAGED COOLING UNIT	MAINTENANCE	COMM ROOM	4-SPEED DIRECT	785	95	R-410A	23,200	11	13.4	208 / 1	3.4	16.7	25	MERV 13	358	36	49	42	-	TRANE	4TCC4042E1000A	ALL
AC	5-2	PACKAGED COOLING UNIT	MAINTENANCE	LAN ROOM	4-SPEED DIRECT	785	95	R-410A	23,200	11	13.4	208 / 1	3.4	16.7	25	MERV 13	358	36	49	42	-	TRANE	4TCC4042E1000A	ALL
AC	6-1	PACKAGED COOLING UNIT	FUEL/BRAKE	COMM	4-SPEED DIRECT	785	95	R-410A	23,200	11	13.4	208 / 1	3.4	16.7	25	MERV 13	358	36	49	42	CA-TRN-1213-TRN-590-9	TRANE	4TCC4042E1000A	ALL

NOTES:
1. CONTRACTOR TO VERIFY EXISTING ROOF CURB SIZE AND PROVIDE CURB ADAPTER AS NECESSARY FOR NEW EQUIPMENT.
2. PROVIDE WITH INTERMITTENT IGNITION DEVICE (IID)
3. FILTERS ARE TO BE PROVIDED WITH PRE-FILTER. MAXIMUM PRESSURE DROP SHALL BE BASED ON TOTAL PRESSURE DROP ACROSS THE FILTER BANK WITH DIRTY FILTERS.
4. PROVIDE WITH 100% MODULATING DRY-BULB TYPE AIR ECONOMIZER.
5. DISCONNECT PROVIDED BY DICISION 26 CONTRACTOR.
6. PROVIDE SCCR RATINGS GREATER THAN FAULT AMPS SHOWN ON ELECTRICAL DRAWINGS.
7. PROVIDE SUPPLY AND POWERED EXHAUST FANS WITH VFD- BY RTU MANUFACTURER.
8. UNIT SHALL COMPLY WITH ECONOMIZER FAULT DETECTION AND DIAGNOSTICS (FDD) REQUIREMENTS PER CALIFORNIA TITLE 24, PART 6.
9. PROVIDE WITH DUCT SMOKE DETECTOR FOR AUTOMATIC UNIT SHUT OFF. FURNISHED AND WIRED BY DIV 26 CONTRACTOR. ISNTALLED BY DIV 23 CONTRACTOR.
10. LISTED UNIT OPERATING WEIGHT EXCLUDES CURB.
11. UNIT TO BE BACNET COMPATIBLE AND SHALL BE TIED TO THE EXISTING ENERGY MANAGEMENT CONTROL SYSTEM (EMCS).
12. PROVIDE VIBRATION ISOLATION AND SEISMIC RESTRAINT.
13. PROVIDE INVERTER-READY NEMA PREMIUM EFFICIENCY MOTOR WITH SHAFT GROUNDING SYSTEM.
14. PROVIDE A PROGRAMMABLE THERMOSTAT WITH TEMPERATURE SETPOINTS FOR AT LEAST FOUR SCHEDULING PERIODS WITHIN 24 HOURS.
15. PROVIDE CONDENSER COIL GAURD.
16. PROVIDE WITH 115V FIELD POWERED SERVICE OUTLET.

LICENSED PROFESSIONAL ENGINEER
SEVAK GALSTIAN
M-39730
EXP. 12/31/25
MECHANICAL
STATE OF CALIFORNIA

Stantec
801 S. Figueroa Street, Suite 300
Los Angeles, CA 90017

Copyright Reserved
The Contractor shall verify and be responsible for all dimensions. DO NOT scale the drawing - use dimensions or omissions shall be reported to Stantec without delay.
This drawing is the property of Stantec and shall not be reproduced in whole or in part without permission. Reproduction or use for any purpose other than that authorized by Stantec is forbidden.

REVISION	DESCRIPTION	DATE
	100% RESUBMITTAL	5/13/2024
	100% CONSTRUCTION DRAWING SUBMITTAL	3/27/2024
	90% UPDATED CONSTRUCTION SUBMITTAL	2/13/2024

REPLACEMENT OF MECHANICAL UNITS AT SANTA ANA BUS BASE
4301 W. MAC ARTHUR BLVD., SANTA ANA, CA

HEATPUMP AND AIR CONDITIONER SCHEDULES

JOB #:
DESIGN BY: Designer
DRAWN BY: Author
CHECKED BY: Checker
DATE:
SCALE:
SHEET: M-005M

OCTA
ORANGE COUNTY TRANSPORTATION AUTHORITY
550 SOUTH MAIN STREET, ORANGE, CA

Autodesk Docs://2014233703_Santa_Ana_Bus/mech_SantaAnaBus_2014233703.rvt
5/8/2024 11:15:03 AM

IFB 4-2550 EXHIBIT B

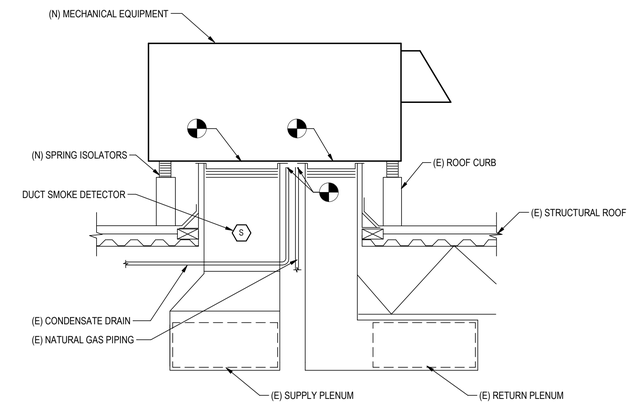

NOTES:

1. CONTRACTOR SHALL PERFORM WORK IN A MANNER SO THAT NO WARRANTIES ARE VOIDED.
2. REFER TO THE CONTRACT DOCUMENTS FOR DUCT MATERIAL AND INSULATION REQUIREMENTS.
3. THE CURB INSULATION SHALL BE EQUAL TO THE ROOF INSULATION RATING
4. COORDINATE THE LOCATION AND SIZE OF THE EQUIPMENT RAIL BASED ON THE EQUIPMENT.
5. CONTRACTOR TO REUSE EXISTING ROOF CURBS AND/OR PROVIDE NEW ROOF CURB ADAPTERS AS SPECIFIED ON THE SCHEDULES.
6. THE TOP OF THE CURB IS TO BE MOUNTED A MINIMUM OF 18 INCHES / 46 CM ABOVE THE TOP OF THE ROOF UNLESS NOTED OTHERWISE.
7. PROVIDE A HINGED FAN BASE FOR ACCESS TO THE MOTORIZED DAMPER
8. CONTRACTOR TO VERIFY EXISTING ROOF CURB IS ADEQUATE FOR NEW EQUIPMENT AND PROVIDE WITH CURB ADAPTER AS REQUIRED.

2 M-006 ROOFTOP EQUIPMENT RECONNECTION DETAIL

12" = 1'-0"

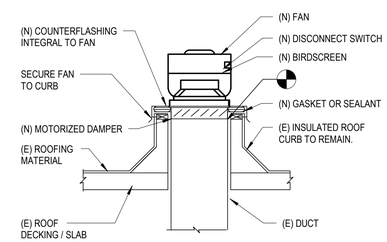

NOTES:

1. COORDINATE SCOPE OF WORK WITH ROOFING CONTRACTOR / OWNER TO NOT VOID ANY WARRANTIES.
2. CONTRACTOR IS TO REUSE EXISTING DUCT.
3. COORDINATE THE LOCATION AND SIZE OF THE EQUIPMENT RAIL BASED ON THE EQUIPMENT.
4. CONTRACTOR IS TO REUSE EXISTING INSULATED ROOF CURB AND/OR PROVIDE NEW ROOF CURB ADAPTERS AS SPECIFIED ON THE SCHEDULES.
5. THE TOP OF THE CURB IS TO BE MOUNTED A MINIMUM OF 18 INCHES / 46 CM ABOVE THE TOP OF THE ROOF UNLESS NOTED OTHERWISE.
6. PROVIDE A HINGED FAN BASE FOR ACCESS TO THE MOTORIZED DAMPER.
7. CONTRACTOR TO VERIFY EXISTING ROOF CURB IS ADEQUATE FOR NEW EQUIPMENT AND PROVIDE WITH CURB ADAPTER AS REQUIRED.

1 M-006 ROOF MOUNTED FAN RECONNECTION DETAIL

12" = 1'-0"

LICENSED PROFESSIONAL ENGINEER SEVAN GALSTYAN M-39730 EXP. 02/31/25 MECHANICAL STATE OF CALIFORNIA

Stantec

801 S. Figueroa Street, Suite 300
Los Angeles, CA 90017

Copyright Reserved
The Contractor shall verify and be responsible for all dimensions. DO NOT scale the drawing, any errors or omissions shall be reported to Stantec without delay.
This drawing is the property of Stantec and shall not be reproduced in whole or in part without written permission. Reproduction or use for any purpose other than that authorized by Stantec is forbidden.

REVISION	DESCRIPTION	DATE
	100% RESUBMITTAL	5/13/2024
	100% CONSTRUCTION DRAWING SUBMITTAL	3/27/2024
	90% UPDATED CONSTRUCTION SUBMITTAL	2/13/2024
	90% CONSTRUCTION DRAWING SUBMITTAL	12/07/2023

REPLACEMENT OF MECHANICAL UNITS AT SANTA ANA BUS BASE
4301 W. MAC ARTHUR BLVD., SANTA ANA, CA

MECHANICAL DETAILS

JOB #:	
DESIGN BY:	SG
DRAWN BY:	RW
CHECKED BY:	GY
DATE:	
SCALE:	12" = 1'-0"
SHEET:	M-006M

OCTA

ORANGE COUNTY TRANSPORTATION AUTHORITY
550 SOUTH MAIN STREET, ORANGE, CA

Autodesk Docs://2014233703_Santa_Ana_Bus/mech_SantaAnaBus_2014233703.rvt

5/8/2024 11:15:03 AM

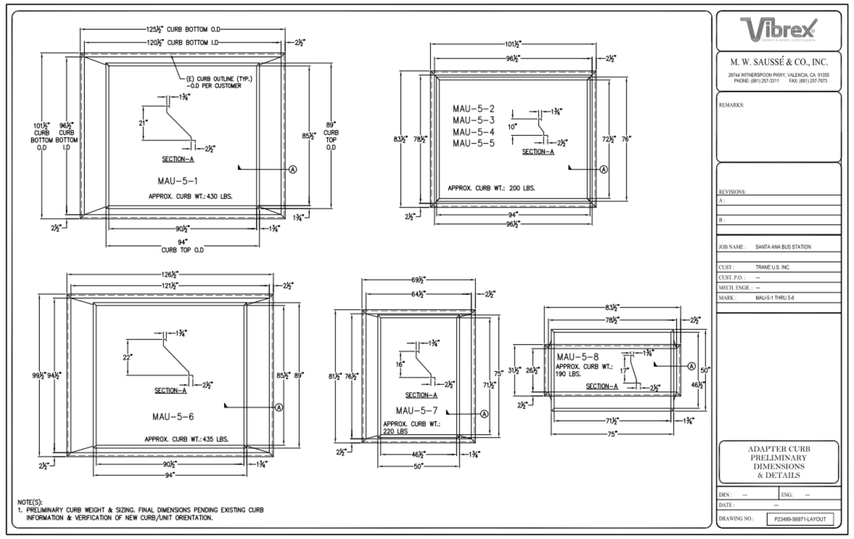

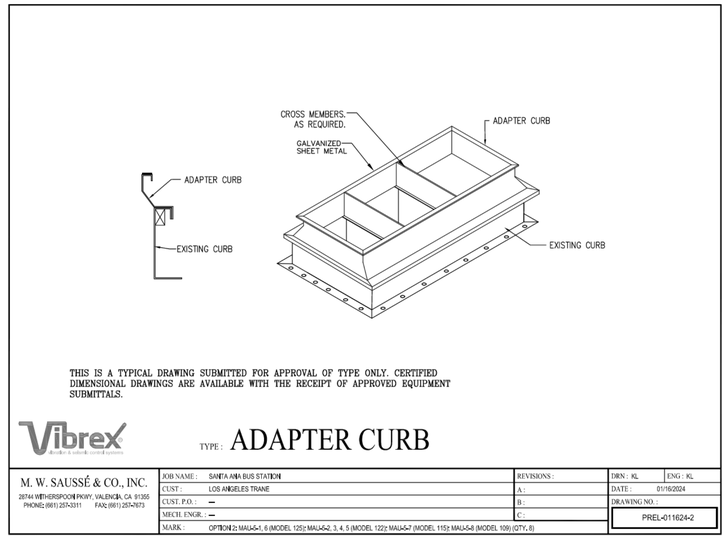

2 M-007 MAU ROOF CURB ADAPTER DETAIL

12" = 1'-0"

1 M-007 RTU ROOF CURB ADAPTER DETAIL

12" = 1'-0"

MicroMetl | DATE: 02/2020 | WEIGHT (LBS): 182 | DESCRIPTION: CURB ADAPTER | PART NUMBER: CA-TRN-593-TRN-592-11

SUBMITTED TO: | COMPANY: | JOB NAME: | APPROVED BY: | DATE:

EXISTING UNIT: | NEW UNIT:

CURB ADAPTER INFORMATION:

1. BEFORE ORDERING CURB ADAPTER, CONTRACTOR MUST CONFIRM THE DIMENSIONS OF THE EXISTING CURB ON THIS DRAWING

2. BEFORE NEW HVAC UNIT IS SET IN PLACE, INSPECT STRUCTURAL STABILITY OF EXISTING CURB AND BUILDING'S ROOF LOAD CAPABILITY. REINFORCE IF REQUIRED.

3. ALL CURB ADAPTERS WILL INCREASE THE SYSTEM'S EXTERNAL STATIC PRESSURE AND MUST BE INCLUDED WHEN CALCULATING UNIT REQUIREMENTS

APPROXIMATE STATIC PRESSURE LOSS AT CFM RANGE				
	CFM	5,000	6,700	8,400	10,000
STATIC LOSS		0.021	0.037	0.059	0.084
NOTE:	STATIC PRESSURE LOSS DATA IS BASED ON SIMULATED ANALYSIS WHICH INCLUDES BOTH SUPPLY AND RETURN				

FEATURES:
- FULLY WELDED HEAVY GAUGE CONSTRUCTION
- TRANSITIONS INCLUDED
- FULL INTERNAL INSULATION
- GASKET PACKAGE INCLUDED

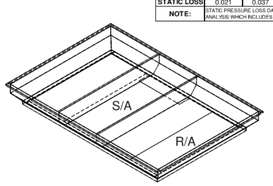

EXISTING CURB TOP VIEW

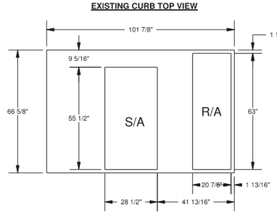

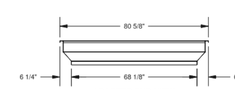

ADAPTER END VIEW

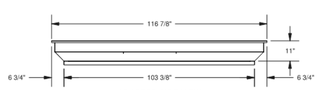

ADAPTER SIDE VIEW

NOTES:

THIS DOCUMENT IS THE PROPERTY OF MICROMETL CORPORATION AND IS DELIVERED UPON THE EXPRESS CONDITION THAT THE CONTENTS WILL NOT BE DISCLOSED OR USED WITHOUT MICROMETL'S WRITTEN CONSENT.
MANUFACTURER RESERVES THE RIGHT TO DISCONTINUE, OR CHANGE AT ANYTIME, SPECIFICATIONS & DESIGNS WITHOUT ANY NOTICE AND WITHOUT INCURRING OBLIGATIONS. COPYRIGHT MICROMETL CORPORATION 2017. ALL RIGHTS RESERVED

MICROMETL CORP * 3035 N. SHADELAND AVE., STE 300 * INDIANAPOLIS, IN 46226 * 1-800-662-4822 *** MICROMETL * 905 SOUTHERN WAY * SPARKS, NV * 1-800-884-4662 *** MICROMETL * 201 KODAK BLVD * LONGVIEW, TX 75602 * 1-903-248-4800

MicroMetl | DATE: 02/2020 | WEIGHT (LBS): 61 | DESCRIPTION: CURB ADAPTER | PART NUMBER: CA-TRN-I213-TRN-590-9

SUBMITTED TO: | COMPANY: | JOB NAME: | APPROVED BY: | DATE:

EXISTING UNIT: | NEW UNIT:

CURB ADAPTER INFORMATION:

1. BEFORE ORDERING CURB ADAPTER, CONTRACTOR MUST CONFIRM THE DIMENSIONS OF THE EXISTING CURB ON THIS DRAWING

2. BEFORE NEW HVAC UNIT IS SET IN PLACE, INSPECT STRUCTURAL STABILITY OF EXISTING CURB AND BUILDING'S ROOF LOAD CAPABILITY. REINFORCE IF REQUIRED.

3. ALL CURB ADAPTERS WILL INCREASE THE SYSTEM'S EXTERNAL STATIC PRESSURE AND MUST BE INCLUDED WHEN CALCULATING UNIT REQUIREMENTS

APPROXIMATE STATIC PRESSURE LOSS AT CFM RANGE				
	CFM	400	800	1,200
STATIC LOSS		0.006	0.031	0.073
NOTE:	STATIC PRESSURE LOSS DATA IS BASED ON SIMULATED ANALYSIS WHICH INCLUDES BOTH SUPPLY AND RETURN			

FEATURES:
- FULLY WELDED HEAVY GAUGE CONSTRUCTION
- TRANSITIONS INCLUDED
- FULL INTERNAL INSULATION
- GASKET PACKAGE INCLUDED

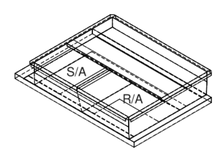

EXISTING CURB TOP VIEW

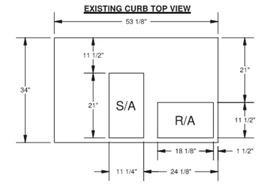

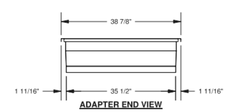

ADAPTER END VIEW

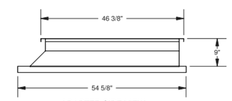

ADAPTER SIDE VIEW

NOTES:

THIS DOCUMENT IS THE PROPERTY OF MICROMETL CORPORATION AND IS DELIVERED UPON THE EXPRESS CONDITION THAT THE CONTENTS WILL NOT BE DISCLOSED OR USED WITHOUT MICROMETL'S WRITTEN CONSENT.
MANUFACTURER RESERVES THE RIGHT TO DISCONTINUE, OR CHANGE AT ANYTIME, SPECIFICATIONS & DESIGNS WITHOUT ANY NOTICE AND WITHOUT INCURRING OBLIGATIONS. COPYRIGHT MICROMETL CORPORATION 2017. ALL RIGHTS RESERVED

MICROMETL CORP * 3035 N. SHADELAND AVE., STE 300 * INDIANAPOLIS, IN 46226 * 1-800-662-4822 *** MICROMETL * 905 SOUTHERN WAY * SPARKS, NV * 1-800-884-4662 *** MICROMETL * 201 KODAK BLVD * LONGVIEW, TX 75602 * 1-903-248-4800

SUBMITTAL MicroMetl | WEIGHT: 103 lbs | DATE: 5/10 | Part Number: CA-TRN-I235-TRN-5750

SUBMITTED TO: _____ JOB NAME: _____
COMPANY: _____ EQUIPMENT: _____
DRAWN BY: _____ NOTES: _____

NEW TRANE UNITS (TRN-I235)

2WCC,WCX,YCX,4TCC,TCX 3042A-3060A; 2/4YCC 3042-3060A; 4DCY,TCY 4048A-4060A; 4DCZ 6048A-6060A; 4WCZ,YCZ 6048A-6060A; 4WCC,WCX,WCY,YCX 3048A-3060A; 4YCY 4042A-4060A

EXISTING UNIT (TRN-5750)

TRANE: DCY 048F,060F; TCC 048F/F-H/G,60F/G; TCP,YCP 048G,060G; TCX,TCY,WCC,WCP,WCX,WCY 048F/G,060F/G; WCZ 060F; YCC 048F-H,060F; YCX,YCY 048F-H/G,060F-M/G; YCZ 050F,060F

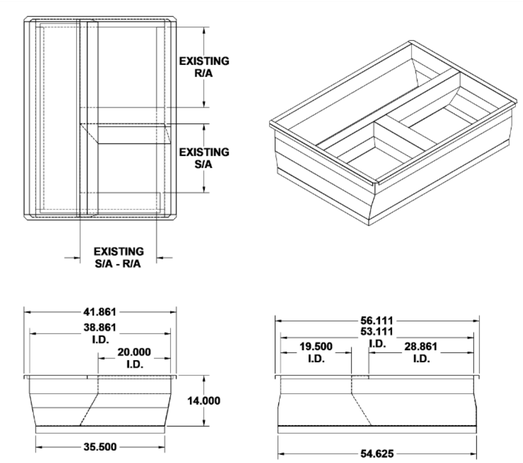

Features:
- Fully assembled curb adaptor.
- Includes internal duct transitions.
- Internally insulated with 1" - 1.5" lb insulation. Gasketing package provided.
- Adaptor pans and supports provided / field installed

Curb Adaptor Information
- To verify that the curb adaptor shown on this page is the correct adaptor for you job be sure the existing curb is the same size as the dimensions provided. (The bottom dimensions of curb adaptor are larger than existing curb outside dimension.)
- Before new HVAC unit is set in place, inspect structural stability of existing curb and building's roof load capability. Reinforce if required.
- All curb adaptors will increase the systems external static pressure and must be included when calculating unit requirements.
- Curb adaptors are designed to attach to an existing curb with side x side duct connections. The curb adaptor is not designed for use with concentric duct configuration.
- No calculations are available for this product. For a calculated product, please contact factory for part number, pricing, and lead time.
- Please contact factory for more detailed dimensional information if required. Designs are based on standard factory dimensions, and may differ in the field.

THIS DOCUMENT IS THE PROPERTY OF MICROMETL CORPORATION AND IS DELIVERED UPON THE EXPRESS CONDITION THAT THE CONTENTS WILL NOT BE DISCLOSED OR USED WITHOUT MICROMETL'S WRITTEN CONSENT. FORM NO. 6997-1P

MICROMETL CORP. - 3035 NORTH SHADELAND AVENUE, SUITE 300 - INDIANAPOLIS, IN 46226 - 1-800-662-4822 — MICROMETL SPARKS - 905 SOUTHERN WAY - SPARKS, N

LICENSED PROFESSIONAL ENGINEER — SEVAK GALSTYAN — M-39730 — EXP. 12/31/25 — MECHANICAL — STATE OF CALIFORNIA

Stantec
801 S. Figueroa Street, Suite 300
Los Angeles, CA 90017

Copyright Reserved
The Contractor shall verify and be responsible for all dimensions. DO NOT scale the drawing - use dimensions or details as indicated. Report errors to Stantec without delay.
This drawing is the property of Stantec and shall not be reproduced in whole or in part without permission. Reproduction or use for any purpose other than that authorized by Stantec is forbidden.

REVISION	DESCRIPTION	DATE
	100% RESUBMITTAL	5/13/2024
	100% CONSTRUCTION DRAWING SUBMITTAL	3/27/2024
	90% UPDATED CONSTRUCTION SUBMITTAL	2/13/2024

REPLACEMENT OF MECHANICAL UNITS AT SANTA ANA BUS BASE

4301 W. MAC ARTHUR BLVD., SANTA ANA, CA

MECHANICAL DETAILS

JOB #:
DESIGN BY: SG
DRAWN BY: RW
CHECKED BY: GY
DATE:
SCALE: 12" = 1'-0"
SHEET: M-007M

OCTA
ORANGE COUNTY TRANSPORTATION AUTHORITY
550 SOUTH MAIN STREET, ORANGE, CA

Autodesk Docs://2014233703_Santa_Ana_Bus/mech_SantaAnaBus_2014233703.rvt
5/8/2024 11:15:03 AM

Stantec

801 S. Figueroa Street, Suite 300
Los Angeles, CA 90017

Copyright Reserved
The Contractor shall verify and be responsible for all dimensions. DO NOT scale the drawing - any errors or omissions shall be reported to Stantec without delay.
This drawing is the property of Stantec and shall not be reproduced in whole or in part without permission. Reproduction or use for any purpose other than that authorized by Stantec is forbidden.

REVISION	DESCRIPTION	DATE
	100% RESUBMITTAL	5/13/2024
	100% CONSTRUCTION DRAWING SUBMITTAL	3/27/2024
	90% UPDATED CONSTRUCTION SUBMITTAL	2/13/2024
	90% CONSTRUCTION DRAWING SUBMITTAL	12/07/2023

REPLACEMENT OF MECHANICAL UNITS AT SANTA ANA BUS BASE

4301 W. MAC ARTHUR BLVD., SANTA ANA, CA

MECHANICAL CONTROLS

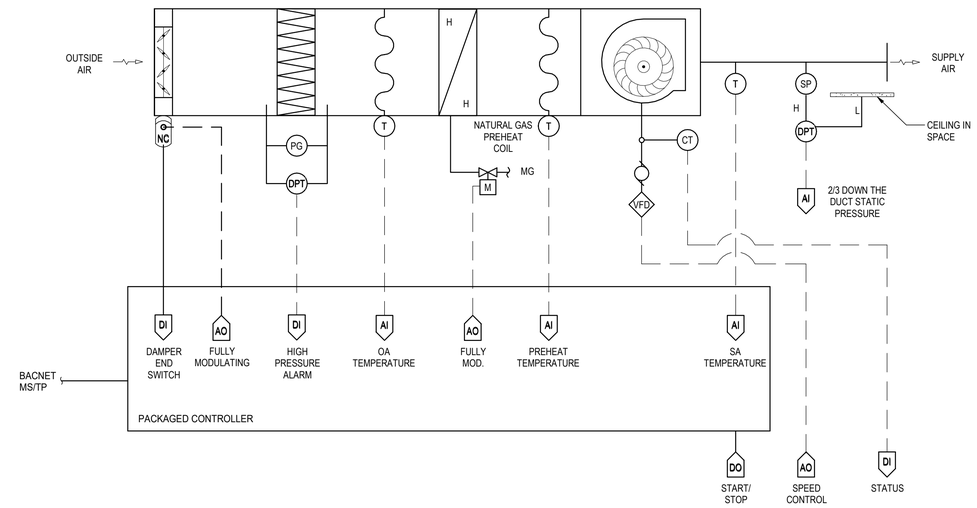

TYPICAL MAKEUP AIR UNIT

MAKEUP AIR HANDLER SEQUENCE OF OPERATION

GENERAL
1. ALL HAND-OFF-AUTO (HOA) SWITCHES NORMALLY REMAIN IN THE AUTO POSITION AND THE HAND AND OFF POSITIONS ARE USED FOR MAINTENANCE SITUATIONS. ALL SETPOINTS, DEADBANDS, AND TIME DELAY INTERVALS DESCRIBED IN SEQUENCE SHALL BE ADJUSTABLE BY SYSTEM OPERATORS. APPROPRIATE DEADBANDS AND TIME DELAYS SHALL BE USED TO PREVENT SHORT CYCLING SITUATIONS.
2. PROVIDE AND INSTALL ALL NECESSARY COMPONENTS AND ACCESSORIES FOR A COMPLETE AND OPERATIONAL SYSTEM INCLUDING, BUT NOT LIMITED TO SENSORS, RELAYS, COMMUNICATION WIRING AND CONDUIT, AND ALL NECESSARY ELECTRICAL DEVICES, WIRING, AND CONDUIT.
3. ALL MAKEUP AIR UNITS (MAU) SHALL INTERLOCK WITH EXHAUST FANS. REFER TO FLOOR PLANS FOR FURTHER DETAILS.

SCHEDULING
THE MAU SHALL HAVE SCHEDULING FUNCTIONALITY THROUGH THE DDC SYSTEM.

START UP MODE
1. UPON STARTUP OF EXHAUST FANS, DDC SHALL ISSUE COMMAND TO MAH FOR STARTUP.
2. THE OUTSIDE AIR DAMPER SHALL OPEN TO MINIMUM POSITION. THE DAMPER END-SWITCH SHALL VERIFY THAT THE DAMPER IS NOT CLOSED PRIOR TO ENERGIZING THE SUPPLY FAN.
3. THE SUPPLY FAN SHALL BE ENERGIZED.

SUPPLY FAN CONTROL
1. THE SUPPLY FAN IS ENERGIZED AND RUNS CONTINUOUSLY.
2. DDC MONITORS THE SUPPLY FAN THROUGH ITS CURRENT SENSOR. UPON A FAILURE, AN ALARM IS ISSUED.

SAFETY CONTROL
1. IF SMOKE IS DETECTED IN THE AIRSTREAM BY A DUCT SMOKE DETECTOR OR THE FIRE ALARM ZONE MODULE INDICATES A ZONE ALARM, THE SYSTEM SHALL BE DEACTIVATED

FILTER MONITORING
1. DDC SHALL MONITOR THE AIR FILTER PRESSURE DROP AND ISSUE A DIRTY FILTER ALARM UPON HIGH DIFFERENTIAL PRESSURE.

VENTILATION
1. DDC SHALL MODULATE SUPPLY FAN TO MAINTAIN A SPACE PRESSURE SET POINT.

GENERAL EXHAUST EMCS POINTS LIST

TAG	NAME/FUNCTION	AI	AO	DI	DO	REMARKS
1	EXHAUST FAN ENABLE/DISABLE				√	
2	EXHAUST FAN ALARM			√		

GENERAL EXHAUST ALARMS

DESIGNATION	POINT	PROTOCOL
EXHAUST FAN FAILURE	2	ALARM AT OPERATOR'S SYSTEM TERMINAL.

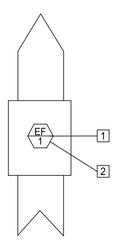

SEQUENCE OF OPERATION
APPLIES TO ALL EXHAUST FANS

OCCUPIED MODE:
EQUIPMENT SHALL OPERATE CONTINUOUSLY IN OCCUPIED (ENABLED) MODE. EF-X SHALL BE NORMALLY OFF.

1 M-008 **EXHAUST CONTROL DIAGRAM**
NOT TO SCALE

2 M-008 **CONTROL DIAGRAM - MAKEUP AIR UNIT**
NOT TO SCALE

LICENSED PROFESSIONAL ENGINEER
SELVAK GALSTIAN
M-39730
EXP. 12/31/25
MECHANICAL
STATE OF CALIFORNIA

JOB #:	
DESIGN BY:	SG
DRAWN BY:	RW
CHECKED BY:	GY
DATE:	
SCALE:	NOT TO SCALE
SHEET:	M-008M

OCTA

ORANGE COUNTY
TRANSPORTATION AUTHORITY
550 SOUTH MAIN STREET, ORANGE, CA

Autodesk Docs://2014233703_Santa_Ana_Bus/mech_SantaAnaBus_2014233703.rvt

Stantec

801 S. Figueroa Street, Suite 300
Los Angeles, CA 90017

Copyright Reserved
The Contractor shall verify and be responsible for all dimensions. DO NOT scale the drawing - any errors or omissions shall be reported to Stantec without delay.
This drawing is the property of Stantec and shall not be reproduced in whole or in part without permission. Reproduction or use for any purpose other than that authorized by Stantec is forbidden.

REVISION	DESCRIPTION	DATE
	100% RESUBMITTAL	5/13/2024
	100% CONSTRUCTION DRAWING SUBMITTAL	3/27/2024
	90% UPDATED CONSTRUCTION SUBMITTAL	2/13/2024
	90% CONSTRUCTION DRAWING SUBMITTAL	12/07/2023

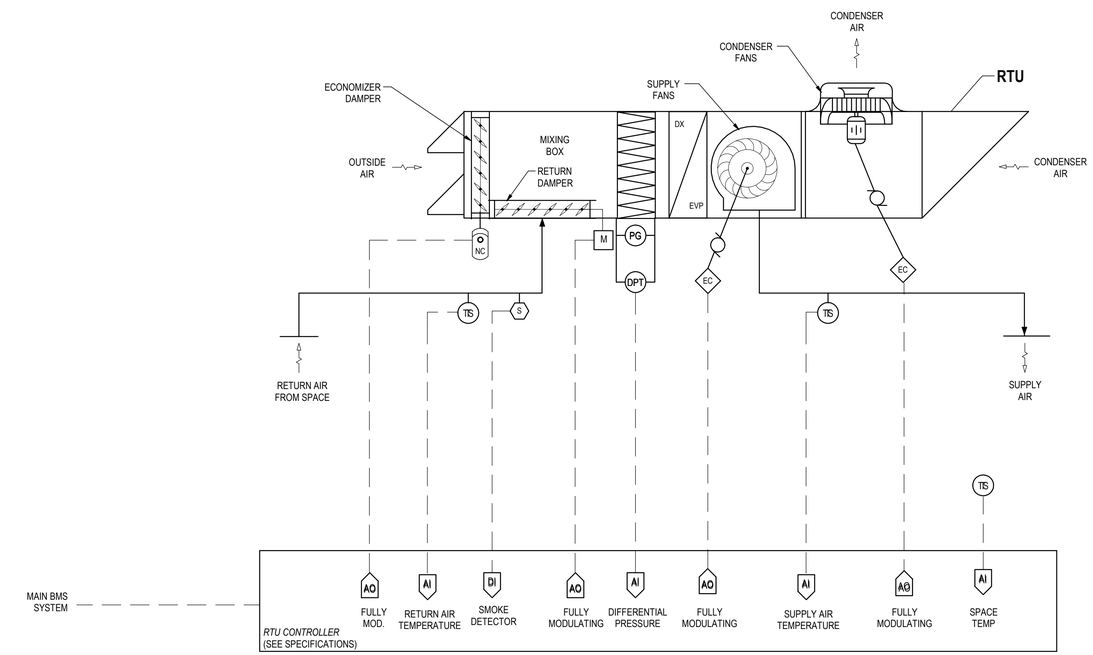

TYPICAL ROOFTOP UNIT

SEQUENCE OF OPERATION

GENERAL

1. ALL HAND-OFF-AUTO (HOA) SWITCHES NORMALLY REMAIN IN THE AUTO POSITION AND THE HAND AND OFF POSITIONS ARE USED FOR MAINTENANCE SITUATIONS. ALL SETPOINTS, DEADBANDS, AND TIME DELAY INTERVALS DESCRIBED IN SEQUENCE SHALL BE ADJUSTABLE BY SYSTEM OPERATORS. APPROPRIATE DEADBANDS AND TIME DELAYS SHALL BE USED TO PREVENT SHORT CYCLING SITUATIONS.
2. PROVIDE AND INSTALL ALL NECESSARY COMPONENTS AND ACCESSORIES FOR A COMPLETE AND OPERATIONAL SYSTEM INCLUDING, BUT NOT LIMITED TO SENSORS, RELAYS, COMMUNICATION WIRING AND CONDUIT, AND ALL NECESSARY ELECTRICAL DEVICES, WIRING, AND CONDUIT.

START-UP

1. THE ROOFTOP UNIT SHALL BE ACTIVATED BY THE MECHANICAL CONTROLLER AND SHALL RUN CONTINUOUSLY.
2. THE UNIT SHALL MONITOR AND LOG ALL SENSOR INPUTS.

SUPPLY FAN CONTROL

1. THE SUPPLY FAN IS ENERGIZED AND RUNS CONTINUOUSLY.
2. CONTROLLER SHALL MODULATE THE SUPPLY FAN SPEED BETWEEN MANUFACTURER'S ESTABLISHED RANGE TO MAINTAIN SPACE TEMPERATURE SETPOINT.
3. DDC MONITORS THE SUPPLY FAN THROUGH ITS CURRENT SENSOR. UPON A FAILURE, AN ALARM IS ISSUED.

ROOFTOP UNIT OPERATION

1. CONTROLLER SHALL PROVIDE ALL CONTROL OF SUPPLY FANS, CONDENSER FANS, MODULATING DAMPERS, COOLING COIL, REHEAT COIL, COMPRESSOR, AND ASSOCIATED COMPONENTS OF THE RTU UNIT.
2. ROOFTOP UNIT SHALL PROVIDE CONTINUOUS COOLING TO THE OFFICE SPACE BASED ON A 15-MIN AVERAGE RETURN AIR TEMPERATURE.
3. ROOFTOP UNIT SHALL PROVIDE ADJUSTABLE DISCHARGE AIR TEMPERATURE.

FILTER MONITORING

1. THE UNIT CONTROLLER SHALL MONITOR THE AIR FILTER DIFFERENTIAL PRESSURE DROP AND ISSUE A DIRTY FILTER ALARM UPON HIGH DIFFERENTIAL PRESSURE.

SAFETY CONTROL

1. IF SMOKE IS DETECTED IN THE AIRSTREAM BY A DUCT SMOKE DETECTOR OF THE FIRE ALARM ZONE MODULE INDICATES A ZONE ALARM, THE UNIT SHUTS DOWN. REFER TO SHUTDOWN MODE. IF A CONTROLLING SENSOR IS DETERMINED TO HAVE FAILED THAT WOULD DAMAGE THE EQUIPMENT OR CAUSE INAPPROPRIATE CONDITIONS IN THE SPACE, THE UNIT SHUTS DOWN. REFER TO SHUTDOWN MODE

SHUTDOWN MODE CONTROL

1. UPON A SHUTDOWN COMMAND FROM THE UNIT CONTROLLER OR A SAFETY CONTROL DEVICE COMMAND, THE UNIT COMMENCES SHUTDOWN.
2. THE SUPPLY FAN AND CONDENSER FAN ARE COMMANDED OFF.
3. THE RETURN AIR DAMPER IS MODULATES TO FULLY OPEN AND THE OUTSIDE AIR DAMPER MODULATES TO FULLY CLOSED.

SET POINTS

1. COOLING DISCHARGE AIR TEMPERATURE SETPOINT	55 F	(ADJ)
2. ROOM DIFFERENTIAL PRESSURE	+0.025 INWC	(ADJ)
3. ROOM DIFFERENTIAL PRESSURE TIME DELAY	1 MIN	(ADJ)

1 / M-009

CONTROL DIAGRAM - ROOF-MOUNTED PACKAGE UNIT WITH EXTERNAL POWERED ECONOMIZER

NOT TO SCALE

LICENSED PROFESSIONAL ENGINEER
SEVAK GALSTYAN
M-39730
EXP. 12/31/25
MECHANICAL
STATE OF CALIFORNIA

REPLACEMENT OF MECHANICAL UNITS AT SANTA ANA BUS BASE

4301 W. MAC ARTHUR BLVD., SANTA ANA, CA

MECHANICAL CONTROLS

JOB #:	
DESIGN BY:	SG
DRAWN BY:	RW
CHECKED BY:	GY
DATE:	
SCALE:	NOT TO SCALE
SHEET:	M-009M

OCTA

ORANGE COUNTY
TRANSPORTATION AUTHORITY
550 SOUTH MAIN STREET, ORANGE, CA

Autodesk Docs://2014233703_Santa_Ana_Bus/mech_SantaAnaBus_2014233703.rvt

5/8/2024 11:15:04 AM

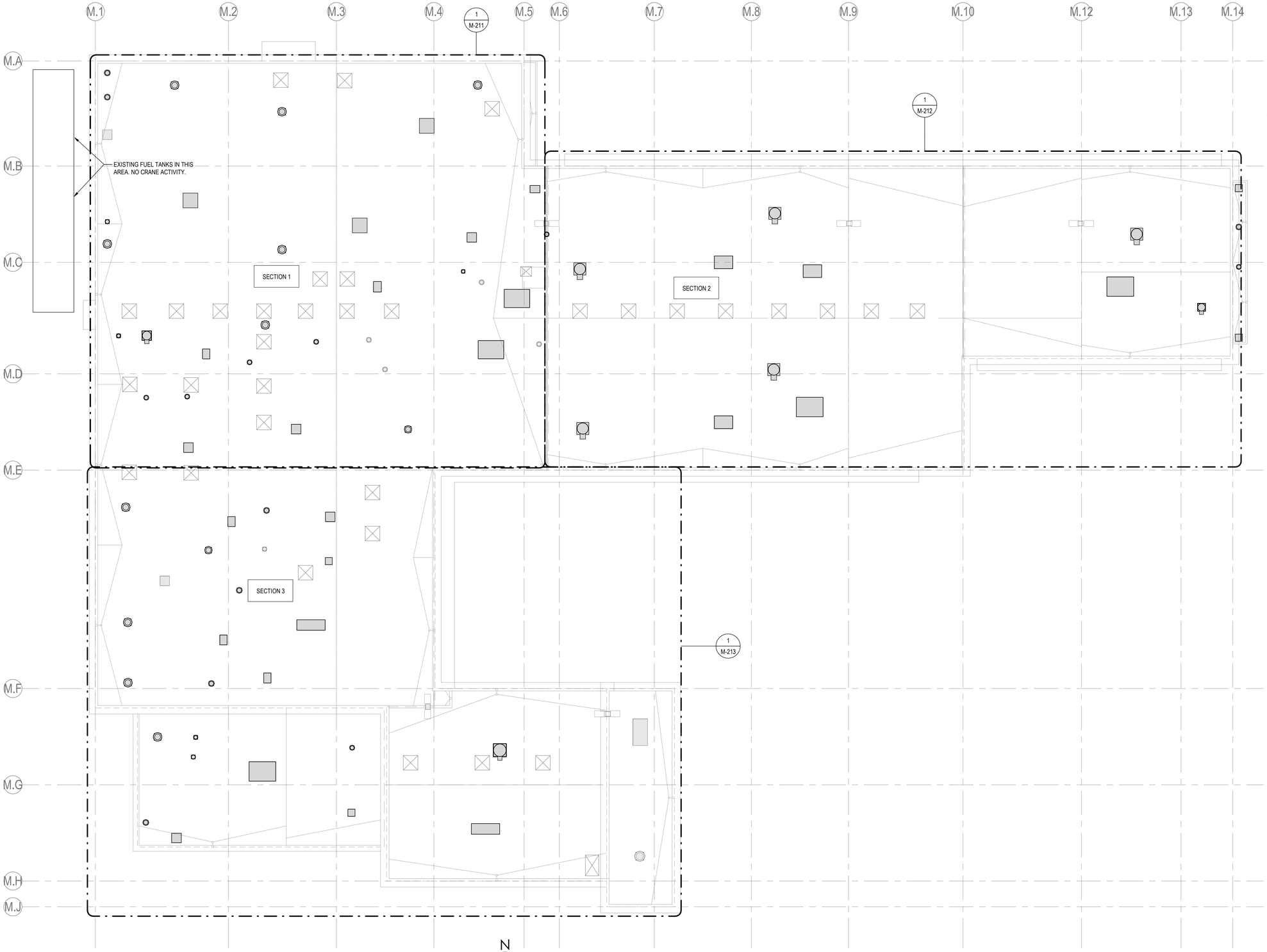

GENERAL NOTES

1. COORDINATE LOCATIONS OF ALL EQUIPMENT AND ROUTING OF ALL DUCTWORK AND PIPING WITH OTHER TRADES PRIOR TO ANY ROUGH-IN. PROVIDE OFFSETS AND TRANSITIONS WHERE REQUIRED TO ACCOMODATE BUILDING CONDITIONS AND PRESERVE HEADROOM.
2. INSTALL AND ROUTE CONDENSATE PIPING FOR ROOFTOP HVAC EQUIPMENT AND ROUTE AT LEAST 12 FEET AWAY FROM UNIT IN DIRECTION OF ROOF SLOPE AND ROOF DRAINS, MIN 1% PIPE SLOPE.
3. INSTALL EQUIPMENT LEVEL ON ROOF.
4. MAINTAIN MINIMUM OF 10'-0" OF HORIZONTAL DISTANCE BETWEEN BUILDING OUTDOOR AIR INTAKE AND BUILDING EXHAUST AIR AND PLUMBING VENTS.
5. EXISTING ROOF CURB AND DUCT TO BE REUSED. CONTRACTOR TO PROVIDE CURB ADAPTER FOR NEW EQUIPMENT PER SCHEDULE.

1 M-210 **MAINTENANCE BUILDING OVERALL MECHANICAL ROOF PLAN**

1" = 20'-0"

N

LICENSED PROFESSIONAL ENGINEER SIYAR GALSTYAN M-39730 EXP. 12/31/25 MECHANICAL STATE OF CALIFORNIA

Stantec
801 S. Figueroa Street, Suite 300
Los Angeles, CA 90017

Copyright Reserved
The Contractor shall verify and be responsible for all dimensions. DO NOT scale the drawing - use dimensions or written/verbal specifications to 3 decimal places. Report any errors, omissions or conflicts to the Consultant. Reproduction or use for any purpose other than that authorized by Stantec is forbidden.

REVISION	DESCRIPTION	DATE
	100% RESUBMITTAL	5/13/2024
	100% CONSTRUCTION DRAWING SUBMITTAL	3/27/2024
	90% UPDATED CONSTRUCTION SUBMITTAL	2/13/2024
	90% CONSTRUCTION DRAWING SUBMITTAL	12/07/2023

REPLACEMENT OF MECHANICAL UNITS AT SANTA ANA BUS BASE
4301 W. MAC ARTHUR BLVD., SANTA ANA, CA

MAINTENANCE BUILDING OVERALL MECHANICAL ROOF PLAN

JOB #:	
DESIGN BY:	SG
DRAWN BY:	RW
CHECKED BY:	GY
DATE:	
SCALE:	As indicated
SHEET:	M-210M

OCTA
ORANGE COUNTY TRANSPORTATION AUTHORITY
550 SOUTH MAIN STREET, ORANGE, CA

Autodesk Docs://2014233703_Santa_Ana_Bus/mech_SantaAnaBus_2014233703.rvt

5/8/2024 11:15:05 AM

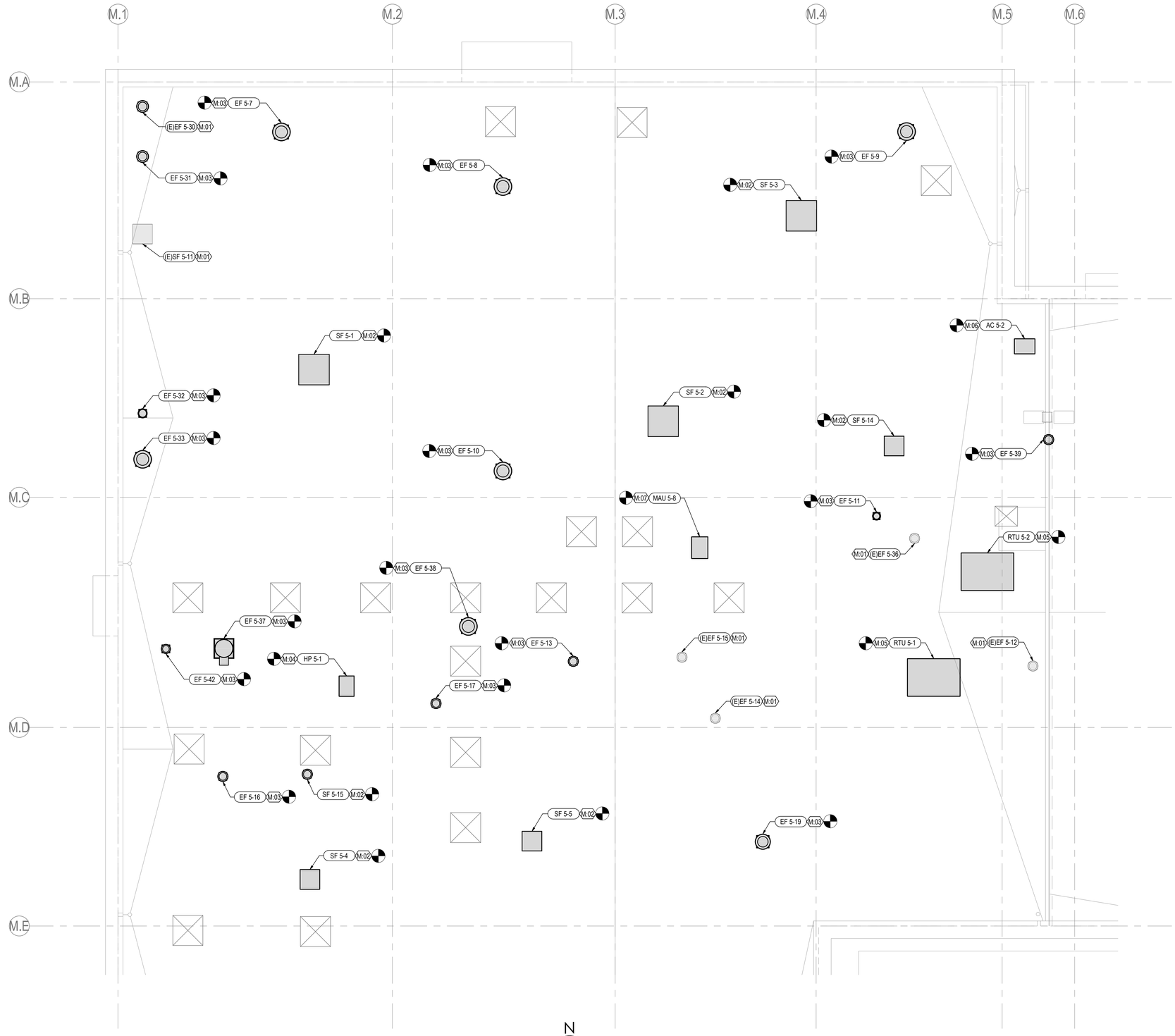

1 M-211 **MAINTENANCE BUILDING SECTION ONE MECHANICAL ROOF PLAN**

3/32" = 1'-0"

N

GENERAL NOTES

1. COORDINATE LOCATIONS OF ALL EQUIPMENT AND ROUTING OF ALL DUCTWORK AND PIPING WITH OTHER TRADES PRIOR TO ANY ROUGH-IN. PROVIDE OFFSETS AND TRANSITIONS WHERE REQUIRED TO ACCOMODATE BUILDING CONDITIONS AND PRESERVE HEADROOM.
2. INSTALL AND ROUTE CONDENSATE PIPING FOR ROOFTOP HVAC EQUIPMENT AND ROUTE AT LEAST 12 FEET AWAY FROM UNIT IN DIRECTION OF ROOF SLOPE AND ROOF DRAINS, MIN 1% PIPE SLOPE.
3. INSTALL EQUIPMENT LEVEL ON ROOF.
4. MAINTAIN MINIMUM OF 10'-0" OF HORIZONTAL DISTANCE BETWEEN BUILDING OUTDOOR AIR INTAKE AND BUILDING EXHAUST AIR AND PLUMBING VENTS.
5. EXISTING ROOF CURB AND DUCT TO BE REUSED. CONTRACTOR TO PROVIDE CURB ADAPTER FOR NEW EQUIPMENT PER SCHEDULE.

Keynote Legend

Key Value	Keynote Text
M:01	EXISTING MECHANICAL EQUIPMENT.
M:02	INSTALL NEW SUPPLY FAN AND RECONNECT TO EXISTING DUCTWORK BELOW
M:03	INSTALL NEW EXHAUST FAN AND RECONNECT TO EXISTING DUCTWORK BELOW
M:04	INSTALL NEW HEAT PUMP AND RECONNECT TO EXISTING DUCTWORK BELOW
M:05	INSTALL NEW ROOFTOP UNIT AND RECONNECT TO EXISTING DUCTWORK BELOW
M:06	INSTALL NEW AIR CONDITIONING UNT AND RECONNECT TO EXISTING DUCTWORK BELOW
M:07	INSTALL NEW MAKEUP AIR UNT AND RECONNECT TO EXISTING DUCTWORK BELOW

Stantec
801 S. Figueroa Street, Suite 300
Los Angeles, CA 90017

Copyright Reserved
The Contractor shall verify and be responsible for all dimensions. DO NOT scale the drawing - use dimensions or written information as indicated or required to fit plan/site without delay.
This drawing is the property of the Consultant and must be returned on request. Reproduction or use for any purpose other than that authorized by Stantec is forbidden.

REVISION	DESCRIPTION	DATE
	100% RESUBMITTAL	5/13/2024
	100% CONSTRUCTION DRAWING SUBMITTAL	3/27/2024
	90% UPDATED CONSTRUCTION SUBMITTAL	2/13/2024
	90% CONSTRUCTION DRAWING SUBMITTAL	12/07/2023

REPLACEMENT OF MECHANICAL UNITS AT SANTA ANA BUS BASE
4301 W. MAC ARTHUR BLVD., SANTA ANA, CA

MAINTENANCE BUILDING SECTION ONE MECHANICAL ROOF PLAN

JOB #:	
DESIGN BY:	SG
DRAWN BY:	RW
CHECKED BY:	GY
DATE:	
SCALE:	As indicated
SHEET:	M-211M

LICENSED PROFESSIONAL ENGINEER
SIYAK GALSTYAN
M 39730
EXP. 12/31/25
MECHANICAL
STATE OF CALIFORNIA

OCTA
ORANGE COUNTY TRANSPORTATION AUTHORITY
550 SOUTH MAIN STREET, ORANGE, CA

Autodesk Docs://2014233703_Santa_Ana_Bus/mech_SantaAnaBus_2014233703.rvt
5/8/2024 11:15:06 AM

IFB 4-2550 EXHIBIT B

Keynote Legend

Key Value	Keynote Text
M:02	INSTALL NEW SUPPLY FAN AND RECONNECT TO EXISTING DUCTWORK BELOW
M:03	INSTALL NEW EXHAUST FAN AND RECONNECT TO EXISTING DUCTWORK BELOW
M:07	INSTALL NEW MAKEUP AIR UNT AND RECONNECT TO EXISTING DUCTWORK BELOW

GENERAL NOTES

1. COORDINATE LOCATIONS OF ALL EQUIPMENT AND ROUTING OF ALL DUCTWORK AND PIPING WITH OTHER TRADES PRIOR TO ANY ROUGH-IN. PROVIDE OFFSETS AND TRANSITIONS WHERE REQUIRED TO ACCOMODATE BUILDING CONDITIONS AND PRESERVE HEADROOM.
2. INSTALL AND ROUTE CONDENSATE PIPING FOR ROOFTOP HVAC EQUIPMENT AND ROUTE AT LEAST 12 FEET AWAY FROM UNIT IN DIRECTION OF ROOF SLOPE AND ROOF DRAINS, MIN 1% PIPE SLOPE.
3. INSTALL EQUIPMENT LEVEL ON ROOF.
4. MAINTAIN MINIMUM OF 10'-0" OF HORIZONTAL DISTANCE BETWEEN BUILDING OUTDOOR AIR INTAKE AND BUILDING EXHAUST AIR AND PLUMBING VENTS.
5. EXISTING ROOF CURB AND DUCT TO BE REUSED. CONTRACTOR TO PROVIDE CURB ADAPTER FOR NEW EQUIPMENT PER SCHEDULE.

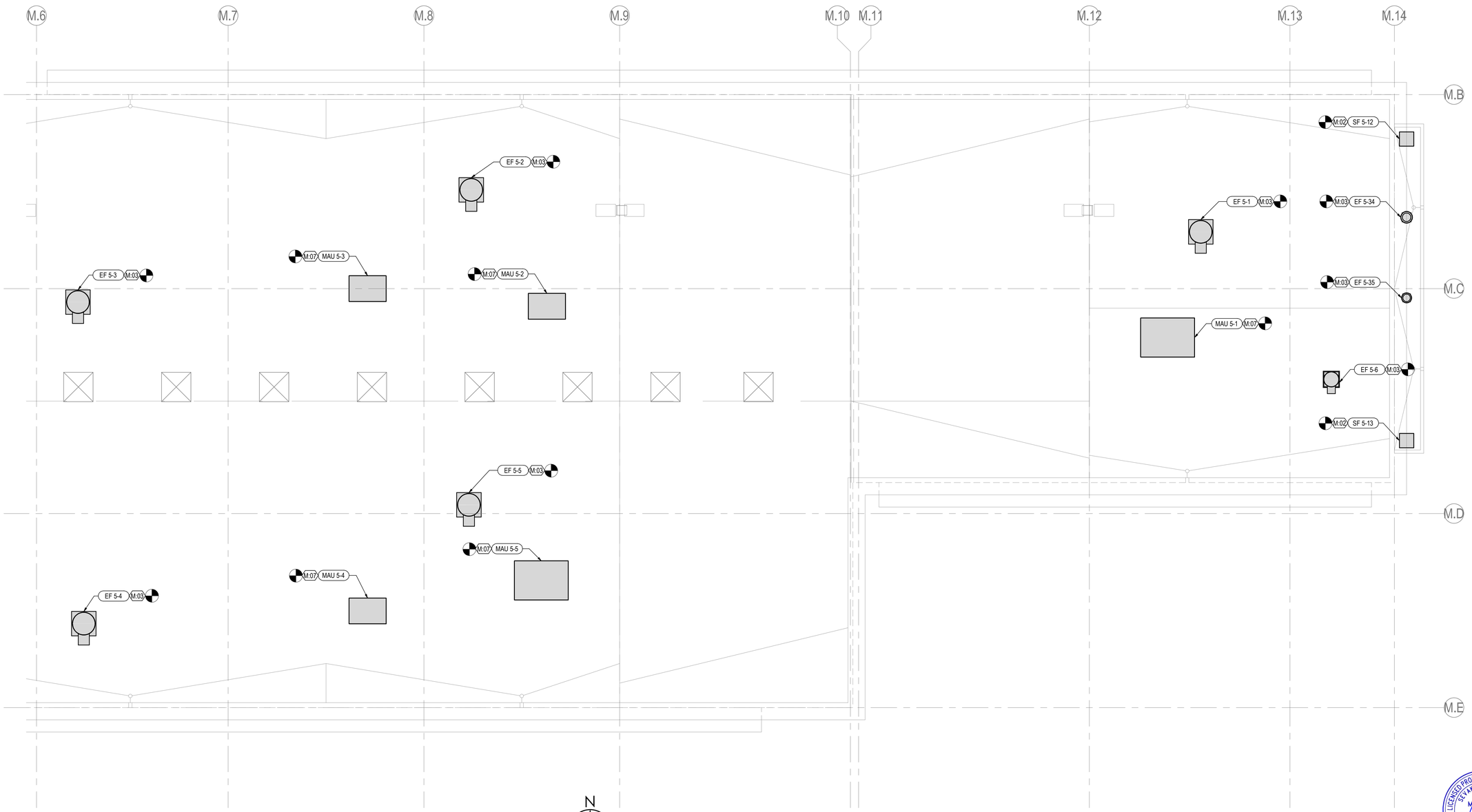

1 M-212 **MAINTENANCE BUILDING SECTION TWO MECHANICAL ROOF PLAN**

3/32" = 1'-0"

N

LICENSED PROFESSIONAL ENGINEER SEVAK GALSTYAN M-39730 EXP. 12/31/25 MECHANICAL STATE OF CALIFORNIA

Stantec

801 S. Figueroa Street, Suite 300
Los Angeles, CA 90017

Copyright Reserved
The Contractor shall verify and be responsible for all dimensions. DO NOT scale the drawing - use dimensions or enquire should any reported to Stantec without delay.
This drawing is the property of Stantec and shall not be reproduced in whole or in part without permission. Reproduction or use for any purpose other than that authorized by Stantec is forbidden.

REVISION	DESCRIPTION	DATE
	100% RESUBMITTAL	5/13/2024
	100% CONSTRUCTION DRAWING SUBMITTAL	3/27/2024
	90% UPDATED CONSTRUCTION SUBMITTAL	2/13/2024
	90% CONSTRUCTION DRAWING SUBMITTAL	12/07/2023

REPLACEMENT OF MECHANICAL UNITS AT SANTA ANA BUS BASE
4301 W. MAC ARTHUR BLVD., SANTA ANA, CA

MAINTENANCE BUILDING SECTION TWO MECHANICAL ROOF PLAN

JOB #:	
DESIGN BY:	SG
DRAWN BY:	RW
CHECKED BY:	GY
DATE:	
SCALE:	As indicated
SHEET:	M-212M

OCTA

ORANGE COUNTY
TRANSPORTATION AUTHORITY
550 SOUTH MAIN STREET, ORANGE, CA

Autodesk Docs://2014233703_Santa_Ana_Bus/mech_SantaAnaBus_2014233703.rvt

5/8/2024 11:15:06 AM

IFB 4-2550 EXHIBIT B

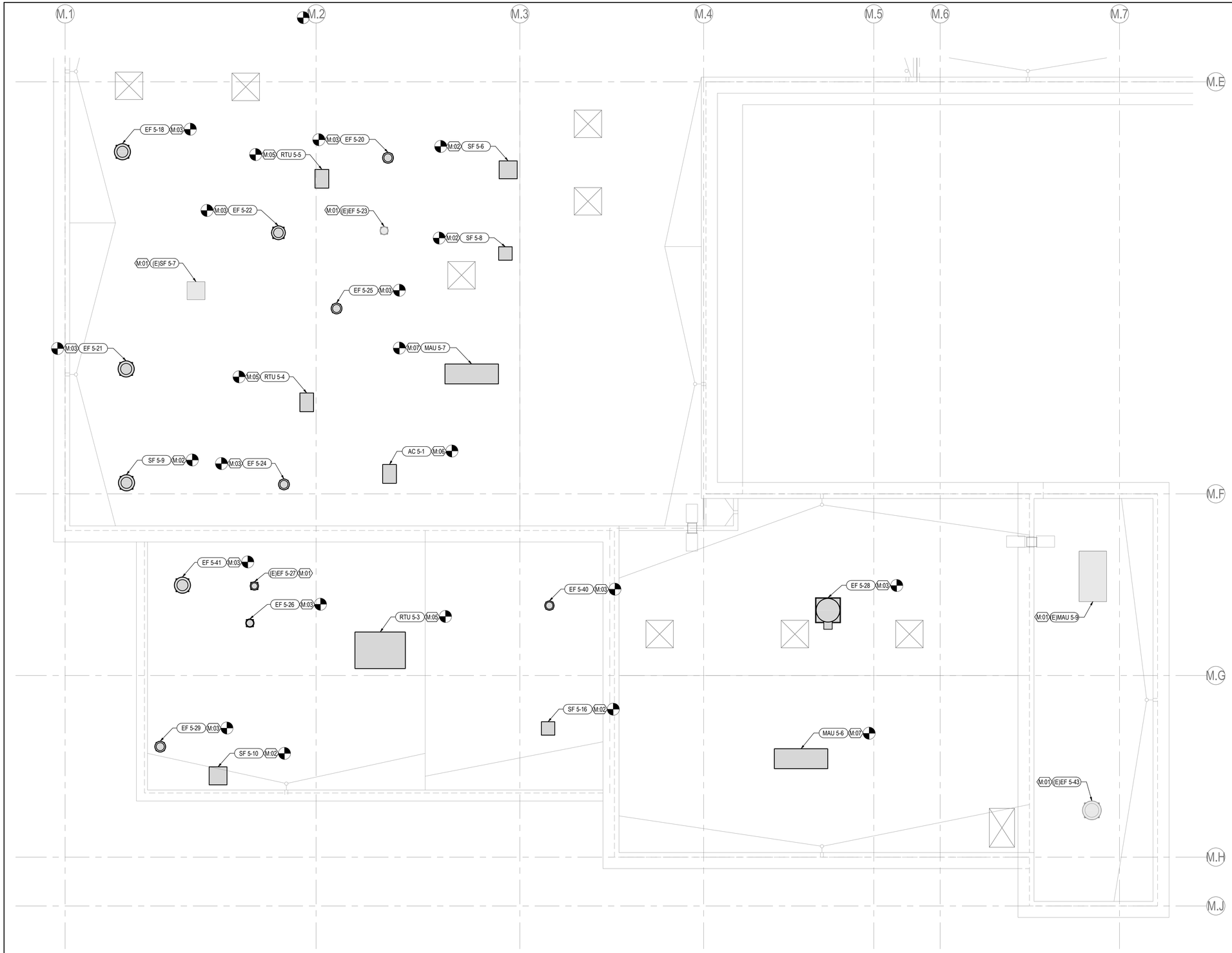

GENERAL NOTES

1. COORDINATE LOCATIONS OF ALL EQUIPMENT AND ROUTING OF ALL DUCTWORK AND PIPING WITH OTHER TRADES PRIOR TO ANY ROUGH-IN. PROVIDE OFFSETS AND TRANSITIONS WHERE REQUIRED TO ACCOMODATE BUILDING CONDITIONS AND PRESERVE HEADROOM.
2. INSTALL AND ROUTE CONDENSATE PIPING FOR ROOFTOP HVAC EQUIPMENT AND ROUTE AT LEAST 12 FEET AWAY FROM UNIT IN DIRECTION OF ROOF SLOPE AND ROOF DRAINS, MIN 1% PIPE SLOPE.
3. INSTALL EQUIPMENT LEVEL ON ROOF.
4. MAINTAIN MINIMUM OF 10'-0" OF HORIZONTAL DISTANCE BETWEEN BUILDING OUTDOOR AIR INTAKE AND BUILDING EXHAUST AIR AND PLUMBING VENTS.
5. EXISTING ROOF CURB AND DUCT TO BE REUSED. CONTRACTOR TO PROVIDE CURB ADAPTER FOR NEW EQUIPMENT PER SCHEDULE.

Keynote Legend

Key Value	Keynote Text
M:01	EXISTING MECHANICAL EQUIPMENT.
M:02	INSTALL NEW SUPPLY FAN AND RECONNECT TO EXISTING DUCTWORK BELOW
M:03	INSTALL NEW EXHAUST FAN AND RECONNECT TO EXISTING DUCTWORK BELOW
M:05	INSTALL NEW ROOFTOP UNIT AND RECONNECT TO EXISTING DUCTWORK BELOW
M:06	INSTALL NEW AIR CONDITIONING UNT AND RECONNECT TO EXISTING DUCTWORK BELOW
M:07	INSTALL NEW MAKEUP AIR UNT AND RECONNECT TO EXISTING DUCTWORK BELOW

1 M-213 **MAINTENANCE BUILDING SECTION THREE MECHANICAL ROOF PLAN**
3/32" = 1'-0"

N

Stantec
801 S. Figueroa Street, Suite 300
Los Angeles, CA 90017

Copyright Reserved
The Contractor shall verify and be responsible for all dimensions. DO NOT scale the drawing, any errors or omissions shall be reported to Stantec without delay.
The copyrights to all designs and drawings are the property of Stantec. Reproduction or use for any purpose other than that authorized by Stantec is forbidden.

REVISION	DESCRIPTION	DATE
	100% RESUBMITTAL	5/13/2024
	100% CONSTRUCTION DRAWING SUBMITTAL	3/27/2024
	90% UPDATED CONSTRUCTION SUBMITTAL	2/13/2024
	90% CONSTRUCTION DRAWING SUBMITTAL	12/07/2023

REPLACEMENT OF MECHANICAL UNITS AT SANTA ANA BUS BASE
4301 W. MAC ARTHUR BLVD., SANTA ANA, CA

MAINTENANCE BUILDING SECTION THREE MECHANICAL ROOF PLAN

JOB #:	
DESIGN BY:	SG
DRAWN BY:	RW
CHECKED BY:	GY
DATE:	
SCALE:	As indicated
SHEET:	M-213M

LICENSED PROFESSIONAL ENGINEER
SEVAK GALSTYAN
M-39730
EXP. 12/31/25
MECHANICAL
STATE OF CALIFORNIA

OCTA
ORANGE COUNTY TRANSPORTATION AUTHORITY
550 SOUTH MAIN STREET, ORANGE, CA

Autodesk Docs://2014233703_Santa_Ana_Bus/mech_SantaAnaBus_2014233703.rvt

5/8/2024 11:15:07 AM

STATE OF CALIFORNIA

Mechanical Systems

CALIFORNIA ENERGY COMMISSION

CERTIFICATE OF COMPLIANCE		NRCC-MCH-E
This document is used to demonstrate compliance for mechanical systems that are within the scope of the permit application and are demonstrating compliance using the prescriptive path outlined in 140.4, or 141.0(b)2 for alterations.		
Project Name: Santa Ana Bus Station	**Report Page:**	**(Page 1 of 9)**
Project Address: 4301 W. MacArthur Blvd, Santa Ana, CA, 92704	**Date Prepared:**	2023-12-05T15:51:16-05:00

A. GENERAL INFORMATION

01	Project Location (city)	Santa Ana, CA	04	Total Conditioned Floor Area	265000
02	Climate Zone	8	05	Total Unconditioned Floor Area	0
03	Occupancy Types Within Project:		06	# of Stories (Habitable Above Grade)	1

• All Other Occupancies

B. PROJECT SCOPE

This table Includes mechanical systems or components that are within the scope of the permit application and are demonstrating compliance using the prescriptive path outlined in 140.4, 170.2(b) or 141.0(b)2 and 180.2(b)2 for alterations.

01		02		03	
Air System(s)		Wet System Components		Dry System Components	
☒	Heating Air System	☐	Water Economizer	☐	Air Economizer
☒	Cooling Air System	☐	Pumps	☐	Electric Resistance Heat
Mechanical Controls		☐	System Piping	☐	Fan Systems
☒	Mechanical Controls (existing to remain, altered or new)	☐	Cooling Towers	☐	Ductwork (existing to remain, altered or new)
		☐	Chillers	☐	Ventilation
		☐	Boilers	☐	Zonal Systems/ Terminal Boxes

STATE OF CALIFORNIA

Mechanical Systems

CALIFORNIA ENERGY COMMISSION

CERTIFICATE OF COMPLIANCE		NRCC-MCH-E
Project Name: Santa Ana Bus Station	**Report Page:**	**(Page 2 of 9)**
	Date Prepared:	2023-12-05T15:51:16-05:00

C. COMPLIANCE RESULTS

Table C will indicate if the project data input into the compliance document is compliant with mechanical requirements. This table is not editable by the user. If this table says "DOES NOT COMPLY" or "COMPLIES with Exceptional Conditions" refer to Table D., or the table indicated as not compliant for guidance.

01		02		03		04		05		06		07		08	09
System Summary 110.1, 110.2, 140.4, 170.2(c)	AND	Pumps 140.4(k), 170.2(c)4I	AND	Fans/ Economizers 140.4(c), 140.4(e), 170.2(c)	AND	System Controls 110.2, 120.2, 140.4(f), 170.2(c)	AND	Ventilation 120.1, 160.2	AND	Terminal Box Controls 140.4(d), 170.2(c)4B	AND	Distribution 120.3, 140.4(l), 160.2, 160.3	AND	Cooling Towers 110.2(e)2	Compliance Results
(See Table F)		(See Table G)		(See Table H)		(See Table I)		(See Table J)		(See Table K)		(See Table L)		(See Table M)	
Yes	AND		AND		AND	Yes	AND		AND		AND		AND		COMPLIES
Mandatory Measures Compliance (See Table Q for Details)								COMPLIES							

D. EXCEPTIONAL CONDITIONS

This table is auto-filled with uneditable comments because of selections made or data entered in tables throughout the form.

E. ADDITIONAL REMARKS

This table includes remarks made by the permit applicant to the Authority Having Jurisdiction.

F. HVAC SYSTEM SUMMARY (DRY & WET SYSTEMS)

Space Conditioning System Information

01	02	03	04	05	06
System Name	Quantity	System Serving	System Status	Space Type	Utilizing Recovered Heat
RTU 4-1	1	Multi-zone			☐
RTU 4-2	1	Single zone	Alteration		☐
RTU 4-3	1	Single zone	Alteration		☐
RTU 4-4	1	Single zone	Alteration		☐

STATE OF CALIFORNIA

Mechanical Systems

CALIFORNIA ENERGY COMMISSION

CERTIFICATE OF COMPLIANCE		NRCC-MCH-E
Project Name: Santa Ana Bus Station	**Report Page:**	**(Page 3 of 9)**
	Date Prepared:	2023-12-05T15:51:16-05:00

F. HVAC SYSTEM SUMMARY (DRY & WET SYSTEMS)

Space Conditioning System Information

01	02	03	04	05	06
System Name	Quantity	System Serving	System Status	Space Type	Utilizing Recovered Heat
RTU 5-1	1	Multi-zone			☐
RTU 5-2	1	Multi-zone			☐
RTU 6-1	1	Single zone	Alteration		☐
RTU 5-3	1	Multi-zone			☐

Dry System Equipment Sizing (includes air conditioners, condensers, heat pumps, VRF, furnaces and unit heaters and DOAS systems)

01	02	03	04	05	06	07	08	09	10	11
				Equipment Sizing per Mechanical Schedule (kBtu/h) 140.4(a&b), 170.2(c)1 & 170.2(c)2						
				Heating Output[2,3]			Cooling Output[2,3]		Load Calculations[3,4]	
Name or Item Tag	Equipment Category per Tables 110.2, 140.4(a)2 and 170.2(c)3aii	Equipment Type per Tables 110.2 and Title 20	Smallest Size Available[1] 140.4(a) and 170.2(c)1	Per Design (kBtu/h)	Rated (kBtu/h)	Supp. Heating Output (kBtu/h)	Sensible Per Design (kBtu/h)	Rated (kBtu/h)	Total Heating Load (kBtu/h)	Total Sensible Cooling Load (kBtu/h)
RTU 4-1	Furnace + AC	AC, air cooled, single pkg + warm-air central furnace, gas-fired	Yes	202	202	0	125.5	178	202	180
RTU 4-2	Furnace + AC	AC, air cooled, single pkg + warm-air central furnace, gas-fired	Yes	65	65	0	74	74	65	74
RTU 4-3	Furnace + AC	AC, air cooled, single pkg + warm-air central furnace, gas-fired	Yes	121	121	0	91	118	121	118
RTU 4-4	Furnace + AC	AC, air cooled, single pkg + warm-air central furnace, gas-fired	Yes	121	121	0	119	119	121	119
RTU 5-1	Furnace + AC	AC, air cooled, split + warm-air central furnace, gas-fired	Yes	202	202	0	149	182	202	182
RTU 5-2	Furnace + AC	AC, air cooled, single pkg + warm-air central furnace, gas-fired	Yes	202	202	0	128	179	202	179

STATE OF CALIFORNIA

Mechanical Systems

CALIFORNIA ENERGY COMMISSION

CERTIFICATE OF COMPLIANCE		NRCC-MCH-E
Project Name: Santa Ana Bus Station	**Report Page:**	**(Page 4 of 9)**
	Date Prepared:	2023-12-05T15:51:16-05:00

F. HVAC SYSTEM SUMMARY (DRY & WET SYSTEMS)

Dry System Equipment Sizing (includes air conditioners, condensers, heat pumps, VRF, furnaces and unit heaters and DOAS systems)

01	02	03	04	05	06	07	08	09	10	11
RTU 6-1	Unitary Heat Pumps (no elec. resistance)	Air-cooled, pkg (1phase)	Yes	45	45	0	47	47	47	47
RTU 5-3	Furnace + AC	AC, air cooled, single pkg + warm-air central furnace, gas-fired	Yes	202	202	0	132	180	202	180

[1]FOOTNOTES: Equipment shall be the smallest size, within the available options of the desired equipment line, necessary to meet the design heating and cooling loads of the building per 140.4(a) and 170.2(c)1. Healthcare facilities are excepted.
[2]It is common practice to show rated output capacity on the equipment schedule. Sensible cooling output comes from specification sheet tables.
[3] If equipment is heating only, leave cooling output and load blank. If equipment is cooling only, leave heating output and load blank.
[4] Authority Having Jurisdiction may ask for load calculations used for compliance per 140.4(b) and 170.2(c).

Dry System Equipment Efficiency (other than Package Terminal Air Conditioners (PTAC) and Package Terminal Heat Pumps (PTHP), DX-DOAS and Dual Fuel Heat Pumps)

01	02	03	04	05	06	07	08	09
		Heating Mode				Cooling Mode		
Name or Item Tag	Size Category (Btu/h)	Rating Condition (°F)	Efficiency Unit	Minimum Efficiency Required per Tables 110.2 / Title 20	Design Efficiency	Efficiency Unit	Minimum Efficiency Required per Tables 110.2 / Title 20	Design Efficiency
RTU 4-1	>=135kBtuh cooling/ <225kBtuh heating		AFUE	0.8	0.81	EER IEER	10.8 14	10.8 14
RTU 4-2	>=65kBtuh cooling/ <225kBtuh heating		AFUE	0.8	0.81	EER IEER	11 14.6	11 14.6
RTU 4-3	>=65kBtuh cooling/ <225kBtuh heating		AFUE	0.8	0.81	EER IEER	11 14.6	11 14.6
RTU 4-4	>=65kBtuh cooling/ <225kBtuh heating		AFUE	0.8	0.81	EER IEER	11 14.6	11 14.6
RTU 5-1	>=135kBtuh cooling/ <225kBtuh heating		AFUE	0.8	0.81	EER IEER	10.8 14	11 14

STATE OF CALIFORNIA

Mechanical Systems

CALIFORNIA ENERGY COMMISSION

CERTIFICATE OF COMPLIANCE		NRCC-MCH-E
Project Name: Santa Ana Bus Station	**Report Page:**	**(Page 5 of 9)**
	Date Prepared:	2023-12-05T15:51:16-05:00

F. HVAC SYSTEM SUMMARY (DRY & WET SYSTEMS)

Dry System Equipment Efficiency (other than Package Terminal Air Conditioners (PTAC) and Package Terminal Heat Pumps (PTHP), DX-DOAS and Dual Fuel Heat Pumps)

01	02	03	04	05	06	07	08	09
		Heating Mode				Cooling Mode		
Name or Item Tag	Size Category (Btu/h)	Rating Condition (°F)	Efficiency Unit	Minimum Efficiency Required per Tables 110.2 / Title 20	Design Efficiency	Efficiency Unit	Minimum Efficiency Required per Tables 110.2 / Title 20	Design Efficiency
RTU 5-2	>=135kBtuh cooling/ <225kBtuh heating		AFUE	0.8	0.81	EER IEER	10.8 14	10.8 14
RTU 6-1	<65,000		HSPF2	6.7	7	SEER2	13.4	13.4
RTU 5-3	>=135kBtuh cooling/ <225kBtuh heating		AFUE	0.8	0.81	EER IEER	10.8 14	10.8 14

G. PUMPS

This section does not apply to this project.

H. FAN SYSTEMS & AIR ECONOMIZERS

This section does not apply to this project.

STATE OF CALIFORNIA

Mechanical Systems

CALIFORNIA ENERGY COMMISSION

CERTIFICATE OF COMPLIANCE		NRCC-MCH-E
Project Name: Santa Ana Bus Station	**Report Page:**	**(Page 6 of 9)**
	Date Prepared:	2023-12-05T15:51:16-05:00

I. SYSTEM CONTROLS

This table is used to demonstrate compliance with mandatory controls in 110.2 and 120.2 and prescriptive controls in 140.4(f) and (n), 170.2(c)4D 170.2(c)4L or requirements in 141.0(b)2E 180.2(b)2 for altered space conditioning systems.

01	02	03	04	05	06	07	08	09
System Name	System Zoning	Conditioned Floor Area Being Served (ft^2)	Thermostats 110.2(b) & (c)[1], 120.2(a) 160.3(a)2A or 141.0(b)2E & 180.2(b)2	Shut-Off Controls 120.2(e) & 160.3(a)2D	Isolation Zone Controls 120.2(g) & 160.3(a)2F	Demand Response 110.12 120.2(b) & 160.3(a)2B	Supply Air Temp. Reset 140.4(f) & 170.2(c)4D	Window Interlocks per 140.4(n) & 170.2(c)4D
BMS	Multi-zone	> 25,000 ft^2	EMCS	EMCS	EMCS	EMCS	Included	NA: No operable windows

[1]FOOTNOTES: Gravity gas wall heaters, gravity floor heaters, gravity room heaters, non-central electric heaters, fireplaces or decorative gas appliances, wood stoves are not required to have setback thermostats.

J. VENTILATION AND INDOOR AIR QUALITY

This section does not apply to this project.

K. TERMINAL BOX CONTROLS

This section does not apply to this project.

L. DISTRIBUTION (DUCTWORK and PIPING)

This section does not apply to this project.

M. COOLING TOWERS

This section does not apply to this project.

Stantec
801 S. Figueroa Street, Suite 300
Los Angeles, CA 90017

Copyright Reserved

REVISION	DESCRIPTION	DATE
	100% RESUBMITTAL	5/13/2024
	100% CONSTRUCTION DRAWING SUBMITTAL	3/27/2024
	90% UPDATED CONSTRUCTION SUBMITTAL	2/13/2024
	90% CONSTRUCTION DRAWING SUBMITTAL	12/07/2023

REPLACEMENT OF MECHANICAL UNITS AT SANTA ANA BUS BASE

4301 W. MAC ARTHUR BLVD., SANTA ANA, CA

TITLE 24 CODE COMPLIANCE

JOB #:	
DESIGN BY:	SG
DRAWN BY:	RW
CHECKED BY:	GY
DATE:	
SCALE:	
SHEET:	M-300M

LICENSED PROFESSIONAL ENGINEER
SEVAK GALSTYAN
M 39730
EXP. 12/31/25
MECHANICAL
STATE OF CALIFORNIA

OCTA
ORANGE COUNTY
TRANSPORTATION AUTHORITY
550 SOUTH MAIN STREET, ORANGE, CA

Autodesk Docs://2014233703_Santa_Ana_Bus/mech_SantaAnaBus_2014233703.rvt
5/8/2024 11:15:08 AM

STATE OF CALIFORNIA
Mechanical Systems
CALIFORNIA ENERGY COMMISSION

CERTIFICATE OF COMPLIANCE		NRCC-MCH-E
Project Name: Santa Ana Bus Station	Report Page:	(Page 7 of 9)
	Date Prepared:	2023-12-05T15:51:16-05:00

N. DECLARATION OF REQUIRED CERTIFICATES OF INSTALLATION

Selections have been made based on information provided in previous tables of this document. If any selection needs to be changed, please explain why in Table E Additional Remarks. These documents must be provided to the building inspector during construction and can be found online at https://www.energy.ca.gov/programs-and-topics/programs/building-energy-efficiency-standards/2022-building-energy-efficiency-4

Form/Title
NRCI-MCH-01-E - Must be submitted for all buildings

O. DECLARATION OF REQUIRED CERTIFICATES OF ACCEPTANCE

Selections have been made based on information provided in previous tables of this document. If any selection needs to be changed, please explain why in Table E Additional Remarks. These documents must be provided to the building inspector during construction and can be found online at https://www.energy.ca.gov/title24/2019standards/2019_compliance_documents/Nonresidential_Documents/NRCA/

Form/Title	Systems/Spaces To Be Field Verified
NRCA-MCH-16-A Supply Air Temperature Reset Controls	BMS
NRCA-MCH-18-A Energy Management Control Systems	BMS

P. DECLARATION OF REQUIRED CERTIFICATES OF VERIFICATION

There are no NRCV forms required for this project.

STATE OF CALIFORNIA
Mechanical Systems
CALIFORNIA ENERGY COMMISSION

CERTIFICATE OF COMPLIANCE		NRCC-MCH-E
Project Name: Santa Ana Bus Station	Report Page:	(Page 8 of 9)
	Date Prepared:	2023-12-05T15:51:16-05:00

Q. MANDATORY MEASURES DOCUMENTATION LOCATION

This table is used to indicate where mandatory measures are documented in the plan set or construction documentation.

01		02
Compliance with Mandatory Measures documented through MCH Mandatory Measures Note Block	No	Plan sheet or construction document location
03		04
Mandatory Measure		**Plan sheet or construction document location**
Heating Equipment Efficiency per 110.1		M-004 MECHANICAL SCHEDULES
Cooling Equipment Efficiency per 110.1		M-004 MECHANICAL SCHEDULES
Furnace Standby Loss Control per 110.2(d)		M-004 MECHANICAL SCHEDULES
Heat Pump with Supplemental electric Resistance Heater Controls per 110.2(b)		N/A

STATE OF CALIFORNIA
Mechanical Systems
CALIFORNIA ENERGY COMMISSION

CERTIFICATE OF COMPLIANCE		NRCC-MCH-E
Project Name: Santa Ana Bus Station	Report Page:	(Page 9 of 9)
Project Address: 4301 W. MacArthur Blvd, Santa Ana, CA, 92704	Date Prepared:	2023-12-05T15:51:16-05:00

DOCUMENTATION AUTHOR'S DECLARATION STATEMENT

I certify that this Certificate of Compliance documentation is accurate and complete.

Documentation Author Name: Ryan Walsh	Documentation Author Signature: Walsh, Ryan
Company: stantec	Signature Date: 12/5/2023
Address: 6385 Corporate Drive, Suite 200	CEA/ HERS Certification Identification (if applicable):
City/State/Zip: Colorado Springs, CO 80919	Phone: 860-964-0406

RESPONSIBLE PERSON'S DECLARATION STATEMENT

I certify the following under penalty of perjury, under the laws of the State of California:

1. The information provided on this Certificate of Compliance is true and correct.
2. I am eligible under Division 3 of the Business and Professions Code to accept responsibility for the building design or system design identified on this Certificate of Compliance (responsible designer)
3. The energy features and performance specifications, materials, components, and manufactured devices for the building design or system design identified on this Certificate of Compliance conform to the requirements of Title 24, Part 1 and Part 6 of the California Code of Regulations.
4. The building design features or system design features identified on this Certificate of Compliance are consistent with the information provided on other applicable compliance documents, worksheets, calculations, plans and specifications submitted to the enforcement agency for approval with this building permit application.
5. I will ensure that a completed signed copy of this Certificate of Compliance shall be made available with the building permit(s) issued for the building, and made available to the enforcement agency for all applicable inspections. I understand that a completed signed copy of this Certificate of Compliance is required to be included with the documentation the builder provides to the building owner at occupancy.

Responsible Designer Name: Ryan Walsh	Responsible Designer Signature: Walsh, Ryan
Company: stantec	Date Signed: 12/5/2023
Address: 6385 Corporate Drive, Suite 200	License: N/A
City/State/Zip: Colorado Springs, CO 80919	Phone: 860-964-0406

LICENSED PROFESSIONAL ENGINEER
SIYAR GALSTYAN
M-39730
EXP. 12/31/25
MECHANICAL
STATE OF CALIFORNIA

IFB 4-2550 EXHIBIT B

Stantec
801 S. Figueroa Street, Suite 300
Los Angeles, CA 90017

Copyright Reserved
This drawing and all ideas and designs incorporated herein, as an instrument of service, are the property of Stantec and may not be used for other projects without written consent of Stantec. Reproduction or use for any purpose other than that authorized by Stantec is forbidden.

REVISION	DESCRIPTION	DATE
	100% RESUBMITTAL	5/13/2024
	100% CONSTRUCTION DRAWING SUBMITTAL	3/27/2024
	90% UPDATED CONSTRUCTION SUBMITTAL	2/13/2024
	90% CONSTRUCTION DRAWING SUBMITTAL	12/07/2023

REPLACEMENT OF MECHANICAL UNITS AT SANTA ANA BUS BASE
4301 W. MAC ARTHUR BLVD., SANTA ANA, CA

TITLE 24 CODE COMPLIANCE

JOB #:	
DESIGN BY:	SG
DRAWN BY:	RW
CHECKED BY:	GY
DATE:	
SCALE:	
SHEET:	M-301M

OCTA
ORANGE COUNTY TRANSPORTATION AUTHORITY
550 SOUTH MAIN STREET, ORANGE, CA

Autodesk Docs://2014233703_Santa_Ana_Bus/mech_SantaAnaBus_2014233703.rvt
5/8/2024 11:15:08 AM

CIRCUITS
EMERGENCY NORMAL

RECEPTACLES

- SINGLE RECEPTACLE, 120V
- SINGLE RECEPTACLE, 120V, CEILING MOUNTED
- DUPLEX RECEPTACLE, 120V
- DUPLEX RECEPTACLE, 120V, CEILING MOUNTED
- DOUBLE DUPLEX RECEPTACLE, 120V
- DOUBLE DUPLEX RECEPTACLE, 120V, CEILING MOUNTED
- SPLIT WIRED RECEPTACLE, 120V, TOP CONTROLLED, BOTTOM CONSTANTLY ENERGIZED
- RECEPTACLE, NEMA #
- RECEPTACLE, NEMA #, CEILING MOUNTED
- COMBINATION RECEPTACLE, NEMA # AND 120V
- FURNITURE SYSTEMS RECEPTACLE, 120V
- N/A INDICATES FULLY CONTROLLED
- N/A INDICATES 15A
- N/A INDICATES TWIST LOCK
- N/A INDICATES MOUNTED ABOVE COUNTER BACKSPLASH
- N/A MULTI-SERVICE ASSEMBLY (RECEPTACLES AS INDICATED)
- N/A MULTI-SERVICE CEILING BOX (RECEPTACLES AS INDICATED)
- N/A MULTI-SERVICE FLOOR BOX (RECEPTACLES AS INDICATED)
- N/A MULTI-SERVICE FURNITURE BOX (RECEPTACLES AS INDICATED)
- N/A MULTI-SERVICE POKE THRU (RECEPTACLES AS INDICATED)
- N/A MULTI-SERVICE POWER POLE (RECEPTACLES AS INDICATED)
- N/A MULTI-SERVICE WALL BOX (RECEPTACLES AS INDICATED)
- N/A PLUG STRIP (HORIZONTAL/VERTICAL)
- N/A CLOCK RECEPTACLE, 120V
- CORD DROP, 120V
- CEILING CORD DROP, 120V

RECEPTACLE TYPES

- A ARC FAULT CIRCUIT INTERRUPTER
- AT ARC FAULT CIRCUIT INTERRUPTER AND TAMPER RESISTANT
- D DEDICATED CIRCUIT
- G GROUND FAULT CIRCUIT INTERRUPTER
- GT GROUND FAULT CIRCUIT INTERRUPTER AND TAMPER RESISTANT
- IG ISOLATED GROUND
- S SURGE PROTECTOR
- T TAMPER RESISTANT
- U INTEGRAL USB PORT(S)
- WP WEATHER RESISTANT COVER

CONTROLS

- NON-FUSED SAFETY SWITCH
- FUSED SAFETY SWITCH, FUSE RATING INDICATED
- COMBINATION MOTOR STARTER AND FUSED SAFETY SWITCH, FUSE RATING INDICATED
- MOTOR STARTER
- MANUAL MOTOR STARTER
- AUTOMATIC DOOR PUSHPLATE
- DEAD FRONT GFCI
- EMERGENCY SHUTDOWN
- ENCLOSED CIRCUIT BREAKER
- ENCLOSED CONTACTOR
- PUSH BUTTON CONTROL STATION
- $M TOGGLE SWITCH, MOTOR RATED
- TOUCHLESS AUTOMATIC DOOR OPENER
- DDC DIRECT DIGITAL CONTROL PANEL
- R RELAY
- T THERMOSTAT
- TC TIME CLOCK
- VFD VARIABLE FREQUENCY DRIVE

WORK DEFINITION

- NEW WORK
- EXISTING
- REMOVE EXISTING
- REMOVE EXISTING ELECTRICAL EQUIPMENT
- FUTURE
- TEMPORARY, AS NOTED
- ?-## KEY NOTE
- ??? EQUIPMENT IDENTIFICATION
- XX X-X MECHANICAL EQUIPMENT IDENTIFICATION

RACEWAYS

- RACEWAY CONCEALED IN CEILING OR WALL. EXPOSED RACEWAY IS ALLOWED ONLY WHERE NOTED.
- RACEWAY BELOW SLAB OR UNDERGROUND
- RACEWAY UP
- RACEWAY DOWN
- RACEWAY CONTINUATION
- RACEWAY STUB-OUT WITH BUSHING
- SURFACE RACEWAY (HORIZONTAL/VERTICAL)
- J JUNCTION BOX, CEILING OR ABOVE CEILING MOUNTED
- J JUNCTION BOX, WALL MOUNTED
- J JUNCTION BOX, IN-GROUND
- PB PULL BOX

ELECTRICAL EQUIPMENT

- 208V OR 240V POWER PANELBOARD
- 480V OR 600V POWER PANELBOARD
- EQUIPMENT CABINET OR PANEL
- EQUIPMENT CONNECTION, FILL INDICATES EMERGENCY CIRCUIT
- GROUND BAR
- MOTOR CONNECTION, 1Ø
- MOTOR CONNECTION, 3Ø
- BUS DUCT
- ATS AUTOMATIC TRANSFER SWITCH
- B BUS DUCT PLUG
- SPD SURGE PROTECTIVE DEVICE
- T TRANSFORMER, NOT TO SCALE
- TRANSFORMER, DRAWN TO SCALE

ABBREVIATIONS

#/C	MULTI-CONDUCTOR, # INDICTATES QUANTITY
(D)	DEMOLISH
(E)	EXISTING
(N)	NEW
(R)	EXISTING TO BE RELOCATED
1/C	SINGLE CONDUCTOR
A	AMPS
A/C	AIR CONDITIONING UNIT
AC	ALTERNATING CURRENT
ACH	ABOVE COUNTER HEIGHT
ACT	ACOUSTICAL CEILING TILE
ADA	AMERICANS WITH DISABILITIES ACT
ADJ	ADJUSTABLE
AF	AMP FRAME
AFC	ABOVE FINISHED CEILING
AFCI	ARC FAULT CIRCUIT INTERRUPTER
AFF	ABOVE FINISHED FLOOR
AFG	ABOVE FINISHED GRADE
AHJ	AUTHORITY HAVING JURISDICTION
AHU	AIR HANDLING UNIT
AIC	AMPERE INTERRUPTING CAPACITY
AL	ALUMINUM
ALD	ASSISTED LISTENING DEVICE
ALT	ALTERNATE
ARCH	ARCHITECTURAL
AS	AMP SWITCH
AT	AMP TRIP
ATS	AUTOMATIC TRANSFER SWITCH
AUTO	AUTOMATIC
AV	AUDIO VISUAL
AVG	AVERAGE
AWG	AMERICAN WIRE GAUGE
BC	BONDING CONDUCTOR
BCU	BARE COPPER
BFC	BELOW FINISHED CEILING
BFG	BELOW FINISHED GRADE
BKR	BREAKER
BLDG	BUILDING
BOF	BOTTOM OF FIXTURE
BOH	BACK OF HOUSE
BTM	BOTTOM
C	CONDUIT
C/W	COMPLETE WITH
CAP	CAPACITY
CATV	COMMUNITY ANTENNA TELEVISION
CB	CIRCUIT BREAKER
CCTV	CLOSED CIRCUIT TELEVISION
CEC	CANADIAN ELECTRIC CODE
CFOI	CONTRACTOR FURNISHED, OWNER INSTALLED
CIRC	CIRCULATING
CKT	CIRCUIT
CL	CENTERLINE
CLG	CEIILING
CM	CEIILING MOUNTED
CMU	CONCRETE MASONRY UNIT
CO	CONDUIT ONLY
COMM	COMMUNICATIONS
CONC	CONCRETE
CONN	CONNECTION
CONST	CONSTRUCTION
CONT	CONTINUOUS
CONTR	CONTRACTOR
CPT	CONTROL POWER TRANSFORMER
CPU	CENTRAL PROCESSING UNIT
CR	CRITICAL BRANCH
CT	CURRENT TRANSFORMERS
CTR	CENTER
CU	COPPER
CUH	CABINET UNIT HEATER
D	DEDICATED
DALI	DIGITAL ADDRESSABLE LIGHTING INTERFACE
DC	DIRECT CURRENT
DET	DETAIL
DIA	DIAMETER
DIM	DIMENSION
DISC	DISCONNECT
DIV	DIVISION
DL	DAMP LOCATION
DMX	DIGITAL MULTIPLEX
DMX-RDM	DIGITAL MULTIPLEX REMOTE DEVICE MANAGEMENT
DN	DOWN
DP	DISTRIBUTION PANEL
DPDT	DOUBLE POLE, DOUBLE THROW
DPR	DAMPER
DPST	DOUBLE POLE, SINGLE THROW
DWG	DRAWING
DWH	DOMESTIC WATER HEATER
EA	EACH
EC	ELECTRICAL CONTRACTOR
EF	EXHAUST FAN
ELEC	ELECTRICAL
ELEV	ELEVATOR
EM	EMERGENCY
EM GEN	EMERGENCY GENERATOR
EMT	ELECTRICAL METALLIC TUBING
ENCL	ENCLOSURE
EP	ELECTRIC-PNEUMATIC
EPO	EMERGENCY POWER OFF
EQ	EQUIPMENT BRANCH
EQUIP	EQUIPMENT

ABBREVIATIONS

ETD	EMERGENCY TRANSFER DEVICE
EWC	ELECTRIC WATER COOLER
EXH	EXHAUST
EXP	EXPLOSION PROOF
EXTER	EXTERIOR
F&I	FURNISHED AND INSTALLED
FA	FIRE ALARM
FAA	FIRE ALARM ANNUNCIATOR
FACP	FIRE ALARM CONTROL PANEL
FB	FLOOR BOX
FCU, FC	FAN COIL UNIT
FLR	FLOOR
FLUOR	FLUORESCENT
FO	FIBER (FIBRE) OPTIC
FOH	FRONT OF HOUSE
FP	FIRE PROTECTION
FPC	FORWARD PHASE CONTROL
FS	FUSIBLE SWITCH
FSCS	FIRE FIGHTER SMOKE CONTROL STATION
FU	FUSE
FVNR	FULL VOLTAGE NON REVERSING
FVR	FULL VOLTAGE REVERSING
G, GND	GROUND
G/Y	GREEN YELLOW
GA	GAUGE
GAL	GALLONS
GC	GENERAL CONTRACTOR
GEN	GENERATOR
GFI, GFCI	GROUND FAULT (CIRCUIT) INTERRUPTER
H	HOT CONDUCTOR
HC	HORIZONTAL CROSS CONNECT
HD	HAND DRYER
HFF	HANDS FREE FIXTURE
HH	HANDHOLE
HID	HIGH INTENSITY DISCHARGE
HK	HOUSE KEEPING PAD
HM	HORIZONTALLY MOUNTED
HOA	HAND-OFF-AUTO
HOR	HORIZONTAL
HP	HEAT PUMP
HP	HORSEPOWER
HT	HEATING
HV	HIGH VOLTAGE
HVCB	HIGH VOLTAGE CIRCUIT BREAKER
HW	HOT WATER
HZ	HERTZ
IC	INTERMEDIATE CROSS CONNECT
ID	INSIDE DIAMETER
IDF	INTERMEDIATE DISTRIBUTION FRAME
IG	ISOLATED GROUND
IMC	INTERMEDIATE METAL CONDUIT
INST	INSTANTANEOUS
IP	INTERNET PROTOCOL
JB	JUNCTION BOX
K	KIRK KEY INTERLOCK
KAIC	KILO-AMPS INTERRUPTING CAPACITY
KV	KILOVOLT
KVA	KILOVOLT-AMPERES
KW	KILOWATT
LED	LIGHT EMITTING DIODE
LR	LEGALLY REQUIRED
LS	LIFE SAFETY BRANCH
LSIG	LONG TIME, SHORT TIME, INSTANTANEOUS, GROUND FAULT LIGHTING
LTG	LIGHTING
LV	LOW VOLTAGE
MAU	MAKE UP AIR UNIT
MAX	MAXIMUM
MC	METAL CLAD CABLE
MCA	MINIMUM CIRCUIT AMPS
MCB	MAIN CIRCUIT BREAKER
MCC	MOTOR CONTROL CENTER
MCCB	MOLDED CASE CIRCUIT BREAKER
MCP	MOTOR CIRCUIT PROTECTOR
MCT	MAIN CROSS CONNECT
MDF	MAIN DISTRIBUTION FRAME
MDP	MAIN DISTRIBUTION PANEL
MECH	MECHANICAL
MET	MAIN EARTHING TERMINAL
MFR	MANUFACTURER
MH	MANHOLE
MIN	MINIMUM
MISC	MISCELLANEOUS
MLO	MAIN LUG ONLY
MM	MULTIMODE FIBER (FIBRE) OPTIC STRAND
MSB	MAIN SWITCHBOARD
MTD	MOUNTED
MTG	MOUNTING
MTS	MAIN TERMINAL SPACE
MV	MEDIUM VOLTAGE
MVCB	MEDIUM VOLTAGE CIRCUIT BREAKER
MW	MICROWAVE OVEN
N	NEUTRAL
NAC	NOTIFICATION APPLIANCE CIRCUIT
NC	NORMALLY CLOSED
NEC	NATIONAL ELECTRIC CODE
NEMA	NATIONAL ELECTRICAL MANUFACTURERS ASSOCIATION

ABBREVIATIONS

NIC	NOT IN CONTRACT
NL	NIGHT LIGHT
NO	NORMALLY OPEN
NTS	NOT TO SCALE
OC	ON CENTER
OD	OUTSIDE DIAMETER
OFCI	OWNER FURNISHED, CONTRACTOR INSTALLED
OFE	OWNER FURNISHED EQUIPMENT
OH	OVERHEAD
OL	OVERLOAD
OS	OCCUPANCY SENSOR, OPTIONAL STANDBY
OSP	OUTSIDE PLANT
P	POLE
PA	PUBLIC ADDRESS
PB	PULL BOX
PD	PUNCHDOWN
PF	POWER FACTOR
PNL	PANEL
POE	POINT OF ENTRANCE
POS	POINT OF SERVICE
PR	PAIR
PT	POTENTIAL TRANSFORMERS
PTS	PNEUMATIC TUBE STATION
PTZ	PAN/TILT/ZOOM
PV	PHOTOVOLTAIC
PVC	POLYVINYL CHLORIDE
PWR	POWER
RA	RETURN AIR
REC	RECESSED
RECP	RECEPTACLE
REQD	REQUIRED
REX	REQUEST TO EXIT
RM	ROOM
RNC	RIGID NON-METALLIC CONDUIT
RO	RACEWAY ONLY
RPC	REVERSE PHASE CUT
RSC, RGS	RIGID STEEL CONDUIT
SCCR	SHORT CIRCUIT CURRENT RATING
SEC	SECURITY
SECT	SECTION
SIM	SIMILAR
SM	SINGLE MODE FIBER OPTIC STRAND
SMR	SURFACE MOUNTED RACEWAY
SPD	SURGE PROTECTED DEVICE
SPDT	SINGLE POLE DOUBLE THROW
SPECS	SPECIFICATIONS
SPST	SINGLE POLE SINGLE THROW
SS	STAINLESS STEEL
ST	SHUNT TRIP
STD	STANDARD
SW	SWITCH
SWBD	SWITCHBOARD
SWGR	SWITCHGEAR
SYS	SYSTEM
TBB	TELECOMMUNICATIONS BACKBONE
TC	TEMPERATURE CONTROL OR TERMINAL CABINET
TE	TELECOMMUNICATIONS ENCLOSURE
TELE	TELEPHONE
TELECOM	TELECOMMUNICATIONS
TEMP	TEMPERATURE
TERM	TERMINAL
TGB	TELECOMMUNICATIONS GROUND BAR
TMGB	TELECOMMUNICATIONS MAIN GROUND BAR
TOF	TOP OF FIXTURE
TP	TAMPER RESISTANT
TR	TELECOMMUNICATIONS ROOM
TSP	TWISTED SHIELDED PAIR
TSTAT	THERMOSTAT
TTB	TELECOM TERMINAL BOARD
TV	TELEVISION
TYP	TYPICAL
UG	UNDERGROUND
UH	UNIT HEATER
UNO	UNLESS NOTED OTHERWISE
UNV	UNIVERSAL VOLTAGE
UPS	UNINTERRUPTIBLE POWER SUPPLY
USB	UNIVERSAL SERIAL BUS
UTP	UNSHIELDED TWISTED PAIR
UV	UNIT VENTILATOR
V	VOLTS
VA	VOLT-AMPS
VAV	VARIABLE AIR VOLUME
VC	VOLUME CONTROL
VDT	VISUAL DISPLAY TERMINAL
VERT	VERTICAL
VFD	VARIABLE FREQUENCY DRIVE
VIF	VERIFY IN FIELD
VOL	VOLUME
VT	VAPOR TIGHT
W	WIRE, WATT
WAP	WIRELESS ACCESS POINT
WG	WIREGUARD
WL	WET LOCATION
WP	WEATHERPROOF
WT	WATERTIGHT
XFMR	TRANSFORMER
Ø, PH	PHASE

PROJECT NOTES

1. THE ELECTRICAL CONTRACTOR SHALL OBTAIN ALL NECESSARY PERMITS FROM AUTHORITIES HAVING JURISDICTION AND PAY ALL ASSOCIATED FEES.
2. LOCATE JUNCTION AND PULL BOXES AS REQUIRED TO ALLOW ACCESS AFTER EQUIPMENT AND APPURTENANCES ARE INSTALLED. COORDINATE EXACT LOCATIONS WITH THE OTHER TRADES. COORDINATE LOCATIONS AND ELEVATIONS OF ELECTRICAL DEVICES WITH DRAWINGS AND OTHER TRADES PRIOR TO INSTALLATION.
3. PROTECT PERMANENT BUILDING FINISHES FROM DAMAGE DURING CONSTRUCTION PERIOD. PROVIDE PLYWOOD OR SIMILAR MATERIAL UNDER EQUIPMENT OR MATERIALS STORED ON FLOORS, AND IN AREAS WHERE CONSTRUCTION MAY DAMAGE FINISHES. SURFACES OR FINISHES DAMAGED DURING CONSTRUCTION SHALL BE REPLACED AT THE COST OF THE CONTRACTOR AT FAULT.
4. CONTRACTORS SHALL COORDINATE LOCATIONS OF FIXTURES AND ELECTRICAL DEVICES INSTALLED IN OR ON THE CEILING WITH ARCHITECTURAL REFLECTED CEILING PLAN. CEILING MOUNTED ELECTRICAL DEVICES SHALL BE MOUNTED IN THE CENTER OF THE CEILING TILES, UNLESS OTHERWISE NOTED.
5. WHERE DIRECTED TO USE OR RETAIN EXISTING CIRCUITS, AND THE CIRCUIT NUMBERS DIFFER FROM THE DRAWING, UPDATE DIRECTORIES AND RECORD DRAWINGS.
6. PROPERLY SUPPORT PER CODE LOW VOLTAGE CABLING NOT IN CONDUIT. IN AREAS SUCH AS CORRIDORS DESIGNATED FOR NEW CEILINGS AND FINISHES, SUPPORT EXISTING ELECTRICAL DEVICES AND EQUIPMENT IN AND ABOVE THE CEILING, INCLUDING CONDUIT AND CABLING. PROVIDE PROPER PERMANENT SUPPORT AS NEEDED TO COMPLY WITH CODE AND TAKE WEIGHT OFF CEILING SUPPORTS. REMOVE AND REINSTALL ELECTRICAL DEVICES AND EQUIPMENT AS NEEDED FOR PAINTING, WALL COVERINGS, CEILINGS, AND FINISH WORK. REFER TO ARCHITECTURAL DRAWINGS. LOW VOLTAGE CABLING LOCATED IN EXPOSED STRUCTURE (CEIILING) AREAS SHALL BE INSTALLED IN CONDUIT (OR CABLE TRAY, IF APPLICABLE) AND ROUTED TIGHT TO DECK. INSTALLATIONS NOT IN COMPLIANCE WITH THIS REQUIREMENT SHALL BE REMOVED AND REINSTALLED AT CONTRACTOR'S EXPENSE.
7. WHERE PROJECT PHASING IS INDICATED IN ANY PART OF THE WORKING DOCUMENT PACKAGE, ELECTRICAL CONTRACTOR IS TO PLAN WORK SO AS TO FACILITATE SUCH PHASING.
8. FOR BRANCH CIRCUITS OVER 75' (25 METERS) IN LENGTH (TOTAL ONE WAY) FROM THE PANEL, THE ELECTRICAL CONTRACTOR SHALL CALCULATE THE VOLTAGE DROP AND PROVIDE AN APPROPRIATE CONDUCTOR SIZE TO ACHIEVE NO MORE THAN 3% MAXIMUM ALLOWABLE VOLTAGE DROP.
9. DO NOT SCALE THE DRAWINGS. BECAUSE OF THE SCALE OF THE DRAWINGS, IT IS NOT POSSIBLE TO INDICATE ALL OFFSETS, FITTINGS OR OTHER SIMILAR ITEMS WHICH MAY BE REQUIRED TO MAKE A COMPLETE OPERATING SYSTEM. CAREFULLY INVESTIGATE CONDITIONS AFFECTING WORK AND INSTALL WORK IN SUCH MANNER THAT INTERFERENCES BETWEEN PIPES, CONDUITS, DUCTS, EQUIPMENT, ARCHITECTURAL AND STRUCTURAL FEATURES SHALL BE AVOIDED.

PROJECT DEMOLITION NOTES

1. ANY EXISTING WIRING SERVING DEVICES TO REMAIN IN SERVICE, AND WHICH IS INTERRUPTED BY WORK PERFORMED UNDER THIS CONTRACT, SHALL BE REROUTED TO MAINTAIN CIRCUIT CONTINUITY. ALL EXISTING SYSTEMS/DEVICES TO REMAIN. PRIOR TO COMMENCING WITH DEMOLITION, IDENTIFY ALL POWER, LIGHTING, COMMUNICATION, AND SIGNAL CIRCUITS PASSING THROUGH THE DEMOLITION AREA OR EXTENDING BEYOND THE DEMOLITION AREA. COORDINATE WITH DEMOLITION WORK OF OTHER TRADES.
2. THE EXISTING BUILDING MUST BE KEPT IN OPERATION AT ALL TIMES. MAINTAIN ELECTRICAL SERVICES AND SYSTEMS EXCEPT FOR EQUIPMENT BEING REPLACED BY THIS PROJECT. MAINTAIN CONTINUITY OF FIRE ALARM, LIFE SAFETY AND SECURITY SYSTEMS TO ALL OCCUPIED AREAS OF THE BUILDING THROUGHOUT THE CONSTRUCTION PERIOD. PROVIDE TEMPORARY WIRING AND BRANCH CIRCUITING AS NECESSARY TO MAINTAIN OPERATION OF EXISTING CIRCUITS AND SYSTEMS EXTENDING BEYOND REMODEL AREA. ASSUME FULL RESPONSIBILITY FOR ANY DISRUPTION TO EXISTING SERVICES. RECONNECT ANY SERVICES WHICH ARE TO REMAIN, AND WHICH HAVE BEEN DISCONNECTED DURING DEMOLITION OR CONSTRUCTION. ARRANGE WORK IN SUCH A MANNER THAT INTERRUPTIONS IN SERVICES OCCUR ONLY AT PRE-SCHEDULED TIMES. CARRY OUT THE WORK WITH A MINIMUM OF NOISE, DUST AND DISTURBANCE.
3. PERMANENTLY REMOVE ABANDONED ELECTRICAL EQUIPMENT, LIGHTING FIXTURES, ELECTRICAL DEVICES, POWER AND SIGNALLING WIRING DEVICES AND ASSOCIATED WIRE, RACEWAYS, AND/OR JUNCTION BOXES. THE REMOVAL OR RELOCATION OF EXISTING ELECTRICAL EQUIPMENT PRESENTLY CONCEALED IN EXISTING CONSTRUCTION SHALL BE COORDINATED WITH THE OWNER PRIOR TO REMOVAL OR RELOCATION. RACEWAYS AND CONDUCTORS SHALL BE REMOVED BACK TO THE SOURCE OR NEAREST REMAINING JUNCTION BOX OR DEVICE AS FAR AS PRACTICAL, OR WHERE COMPLETE REMOVAL NOT PRACTICAL, RENDERED PERMANENTLY SAFE.
4. ANY EXISTING SYSTEM OUTAGES SHALL BE OF MINIMUM DURATION AND AT A TIME ACCEPTABLE TO THE OWNER, ARRANGED A MINIMUM OF 10 WORKING DAYS IN ADVANCE. LONGER NOTICES AND/OR ADDITIONAL RESTRICTIONS PERTAINING TO OUTAGES MAY BE REQUIRED IN SOME INSTANCES, AS PER SPECIFICATIONS. VERIFY PROTOCOL WITH ALL PROJECT STAKEHOLDERS INCLUDING OWNER, TENANT, CONSTRUCTION MANAGER AND/OR USER GROUP(S) AS APPLICABLE.
5. ELECTRICAL EQUIPMENT, FIXTURES, AND/OR DEVICES SCHEDULED TO REMAIN OR TO BE RELOCATED THAT ARE DAMAGED DURING DEMOLITION SHALL BE REPLACED WITH SIMILAR TYPE AS APPROVED BY THE OWNER, AT NO ADDITIONAL CHARGE TO THE OWNER.
6. IN THE EVENT THAT DEMOLITION WORK AFFECTS THE STRUCTURAL SUPPORT OF EXISTING ELECTRICAL EQUIPMENT THAT IS TO REMAIN IN SERVICE, IT SHALL BE RE-SUPPORTED IN ACCORDANCE WITH ALL APPLICABLE CODES. PROVIDE TEMPORARY SUPPORTS WHERE REQUIRED.
7. UNUSED FLUSH MOUNTED DEVICES, OUTLET AND OTHER BOXES IN FINISHED AREAS SHALL BE REMOVED FROM WALL AND THE REMAINING HOLE PATCHED TO MATCH ADJACENT WALL SURFACES. UNUSED RACEWAYS AND SLEEVES SHALL BE CUT FLUSH AT CEILING, FLOOR OR WALL AND FILLED WITH GROUT OR REQUIRED FIRE SEALANT. UNUSED RACEWAYS ABOVE ACCESSIBLE CEILINGS SHALL BE REMOVED.
8. ELECTRICAL MATERIAL SCHEDULED FOR REMOVAL IS TO BE REMOVED FROM THE SITE AND PROPERLY DISPOSED OF AS PART OF THIS CONTRACT. ANY ELECTRICAL MATERIAL THE OWNER WISHES TO RETAIN TO BECOME THE PROPERTY OF THE OWNER AND TO BE REMOVED AND PLACED AT A LOCATION ON THE SITE AS DIRECTED BY THE OWNER.
9. THE DEMOLITION DRAWINGS SHOW THE GENERAL SCOPE OF THE DEMOLITION AND NOT EXACT DETAILS OR TOTAL EXTENT. FOR EXACT DETAILS AND TOTAL EXTENT, EACH SERVICE MUST BE CAREFULLY CHECKED ON SITE. BEFORE REMOVING SERVICES FOLLOW THE SERVICE THROUGH TO ENSURE OTHER AREAS OF THE BUILDING ARE NOT AFFECTED.

NEW THERMOSTATS FOR ALL NEW MECHANICAL UNITS ARE GOING TO BE PROVIDED BY MECHANICAL.
REFER TO GENERAL NOTES ON MECHANICAL SET OF DRAWINGS.

REGISTERED PROFESSIONAL ENGINEER
PAUL K. ERICSON
No. 11219
exp.06/30/2025
ELECTRICAL
STATE OF CALIFORNIA

05-13-2024

IFB 4-2550 EXHIBIT B

Stantec
801 S. Figueroa Street, Suite 300
Los Angeles, CA 90017

Copyright Reserved
The contractor shall verify and be responsible for all dimensions. DO NOT scale the drawing - any errors or omissions shall be reported to Stantec without delay.
The copyrights to all designs and drawings are the property of Stantec. Reproduction or use for any purpose other than that authorized by Stantec is prohibited.

REVISION	DESCRIPTION	DATE
4	100% RESUBMITTAL	05/13/2024
3	100% CONSTRUCTION DRAWING SUBMITTAL	03/27/2024
2	90% UPDATED CONSTRUCTION SUBMITTAL	02/13/2024
1	90% CONSTRUCTION DRAWING SUBMITTAL	12/07/2023

REPLACEMENT OF MECHANICAL UNITS AT SANTA ANA BUS BASE
4301 W. MAC ARTHUR BLVD., SANTA ANA, CA

SYMBOLS, NOTES AND ANNOTATIONS

JOB #:	
DESIGN BY:	IZ
DRAWN BY:	ERL
CHECKED BY:	PKE
DATE:	02/13/2024
SCALE:	12" = 1'-0"
SHEET:	E-001M

OCTA
ORANGE COUNTY TRANSPORTATION AUTHORITY
550 SOUTH MAIN STREET, ORANGE, CA

Autodesk Docs://2014233703_Santa_Ana_Bus/elec_SantaAnaBus_2014233703.rvt
5/8/2024 9:59:41 AM

SCHEMATICS

CABLE IDENTIFICATION, TABLE

C01 — CIRCUIT IDENTIFICATION, SEE FEEDER TABLE
3 | 1 | 1
- A = ALUMINUM
- C = COPPER
- M = METAL CLAD

QUANTITY OF GROUND CONDUCTORS, SIZE PER FEEDER TABLE
- 0 = NOT REQUIRED
- 1 = 1 GROUND CONDUCTOR
- 2 = 1 GROUND CONDUCTOR AND 1 ISOLATED GROUND CONDUCTOR

QUANTITY OF NEUTRAL CONDUCTORS, SIZE PER FEEDER TABLE
- 0 = NOT REQUIRED
- 1 = 1 NEUTRAL CONDUCTOR
- 2 = 2 NEUTRAL CONDUCTORS

QUANTITY OF PHASE CONDUCTORS, SIZE PER FEEDER TABLE

CABLE IDENTIFICATION, TEXT

4 #12+ 1 #12G, [SIZE]C
- CONDUIT SIZE
- QUANTITY AND SIZE OF GROUNDS
- QUANTITY AND SIZE OF CONDUCTORS

CABLE IDENTIFICATION, TEXT

4 SETS (3×1/C 600 kcmil +1 #3/0G, Cu, 15kV, 133%, TR-XLPE, [SIZE]C)
- CONDUIT SIZE
- CABLE TYPE
- INSULATION LEVEL
- INSULATION VOLTS
- MATERIAL
- QUANTITY AND SIZE OF GROUNDS
- QUANTITY AND SIZE OF CONDUCTORS
- QUANTITY OF SETS

#×1/C — SINGLE CONDUCTOR CABLE, # INDICATES QUANTITY OF CABLES

#/C — MULTI-CONDUCTOR CABLE, # INDICATES QUANTITY OF CONDUCTORS

— SHORT CIRCUIT CURRENT RATING, # INDICATES RATING

BUS DUCT

BUS

FEEDER

NAME	NAME	NAME	NAME	NAME
LOCATION	LOCATION		LOCATION	LOCATION
225 A MCB	225 A MCB		225 A MCB	225 A MCB
480 V	480 V		480 V	480 V
3 Ø, 4 W	3 Ø, 4 W		3 Ø, 4 W	3 Ø, 4 W
42 CCT	42 CCT		42 CCT	42 CCT
PANEL, SINGLE TUB	PANEL, DOUBLE TUB, MAIN LUGS		PANEL, DOUBLE TUB, FEED THRU LUGS	

SCHEMATICS

- AC/DC INVERTER
- AUTOTRANSFORMER
- AUTOMATIC TRANSFER SWITCH, DUAL BYPASS
- AUTOMATIC TRANSFER SWITCH, SINGLE BYPASS
- BATTERY
- BIMETALLIC THERMAL OVERLOAD
- CAPACITOR
- CIRCUIT BREAKER, LOW VOLTAGE, DRAW OUT
- CIRCUIT BREAKER, LOW VOLTAGE, FIXED
- CIRCUIT BREAKER, LOW VOLTAGE, WITH LIMITER
- CIRCUIT BREAKER, MEDIUM VOLTAGE, DRAW OUT
- CIRCUIT BREAKER, MEDIUM VOLTAGE, FIXED
- CIRCUIT BREAKER, MEDIUM VOLTAGE, VACUUM INTERRUPTER
- CONNECTION, CONNECTED
- CONNECTION, DRAW OUT, DISCONNECTED
- CONNECTION, FEED FROM/TO
- CONNECTION, SPLICE
- CONTACT
- CURRENT TRANSFORMER
- DEAD BREAK ELBOW
- DRAW OUT FUSE AND POTENTIAL TRANSFORMER
- FUSE
- FUSED CUTOUT
- GROUND
- GROUND STUD
- INDUCTOR
- LIGHTNING ARRESTOR, GAP TYPE
- LIGHTNING ARRESTOR, MOV TYPE
- LOAD BREAK ELBOW
- NOT CONNECTED
- POTENTIAL TRANSFORMER
- POTHEAD
- STRESS CONE
- SWITCH, FUSED LOAD BREAK
- SWITCH, NON-FUSED LOAD BREAK
- SWITCH, NON-FUSED DOUBLE LOAD BREAK
- SWITCH, NON-FUSED LOAD BREAK WITH GROUNDING POSITION
- RESISTOR
- ? — TERMINAL BLOCK

SCHEMATICS

- TRANSFER SWITCH
- TRANSFORMER
- TRANSFORMER CONFIGURATION, DELTA
- TRANSFORMER CONFIGURATION, DELTA, CORNER GROUND
- TRANSFORMER CONFIGURATION, DELTA, OPEN
- TRANSFORMER CONFIGURATION, WYE
- TRANSFORMER CONFIGURATION, WYE, INDUCTOR, CURRENT TRANSFORMER, GROUND
- TRANSFORMER CONFIGURATION, WYE, RESISTOR, CURRENT TRANSFORMER, GROUND
- TRANSFORMER CONFIGURATION, WYE, RESISTOR, GROUND
- TRANSFORMER CONFIGURATION, WYE, SOLID GROUND
- TRANSFORMER CONFIGURATION, ZIGZAG
- ZERO SEQUENCE CURRENT TRANSFORMER
- 50 — RELAY, SINGLE FUNCTION
- 50/51 — RELAY, DUAL FUNCTION
- 50 50 50 50 50 50 — RELAY, MULTIFUNCTION
- A — AMMETER
- AS — AMPERAGE METER SWITCH
- DMS — DIGITAL METERING SYSTEM
- G — GENERATOR
- K — KEY OPERATED SWITCH
- LSIG — RELAY, TRIP UNIT
- LSIG — DRAW OUT BREAKER C/W INTEGRAL SOLID STATE TRIP UNIT
- LSIG — DRAW OUT BREAKER C/W SERIES ELECTROMECHANICAL TRIP UNIT
- M — INLINE SOCKET METER
- METER — METER
- O/L — ELECTRONIC THERMAL OVERLOAD
- SB — SHORTING BLOCK
- SPACE — SPACE, DRAW OUT BREAKER
- SPACE — SPACE, FIXED BREAKER
- SPD — SURGE PROTECTION DEVICE
- TS — TEST SWITCH
- V — VOLTMETER
- VS — VOLTAGE METER SWITCH
- X — INDICATOR, VOLTAGE PRESENT

STANDARD MOUNTING HEIGHTS

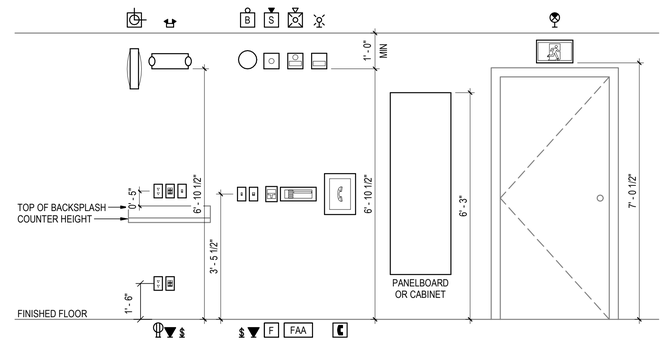

DRAWING INDEX

NO.	DRAWING NAME
E-001	SYMBOLS, NOTES AND ANNOTATIONS
E-002	SCHEMATIC SYMBOLS AND ELECTRICAL DRAWING INDEX
E-210	OPERATIONS BUILDING ELECTRICAL ROOF PLAN
E-220	MAINTENANCE BUILDING OVERALL ELECTRICAL ROOF PLAN
E-221	MAINTENANCE BUILDING SECTION ONE ELECTRICAL ROOF PLAN
E-222	MAINTENANCE BUILDING SECTION TWO ELECTRICAL ROOF PLAN
E-223	MAINTENANCE BUILDING SECTION THREE ELECTRICAL ROOF PLAN
E-230	FUEL/BRAKE/TIRE REPAIR BUILDING ELECTRICAL ROOF PLAN
E-240	BUS WASH/BRAKE DYNO BUILDING ELECTRICAL ROOF PLAN
E-250	DETAIL/CLEANING BUILDING ELECTRICAL ROOF PLAN
E-600	ELECTRICAL SINGLE LINE DIAGRAM
E-601	ELECTRICAL SINGLE LINE DIAGRAM
E-700	PANEL SCHEDULES
E-701	PANEL SCHEDULES
E-702	PANEL SCHEDULES
E-703	PANEL SCHEDULES
E-704	PANEL SCHEDULES
E-800	CONDUIT SCHEDULES
E-801	CONDUIT SCHEDULES
E-802	CONDUIT SCHEDULES

ALUMINUM FEEDERS

ID	NOMINAL CIRCUIT RATING	SETS	CONDUCTORS	GROUND	CONDUIT W/ N (4W)	CONDUIT W/O N (3W)
A01	100	1	#1/0	#6	2"	2"
A02	125	1	#2/0	#4	2"	2"
A03	150	1	#3/0	#4	2"	2"
A04	175	1	#4/0	#4	2 1/2"	2"
A05	200	1	250 kcmil	#4	2 1/2"	2 1/2"
A06	225	1	350 kcmil	#2	3"	2 1/2"
A07	250	1	350 kcmil	#2	3"	2 1/2"
A08	300	1	500 kcmil	#2	3 1/2"	3"
A09	350	1	750 kcmil	#1	4"	3 1/2"
A10	400	2	250 kcmil	#1	2 1/2"	2 1/2"
A11	450	2	350 kcmil	#1/0	3"	2 1/2"
A12	500	2	350 kcmil	#1/0	3"	2 1/2"
A13	600	2	500 kcmil	#2/0	3 1/2"	3"
A14	800	3	350 kcmil	#3/0	3"	3"
A15	900	3	500 kcmil	#4/0	3 1/2"	3"
A16	1000	3	600 kcmil	#4/0	4"	4"
A17	1200	4	500 kcmil	250 kcmil	3 1/2"	3"
A18	1600	6	400 kcmil	350 kcmil	3"	2 1/2"
A19	2000	6	750 kcmil	500 kcmil	4"	4"
A20	2500	7	750 kcmil	750 kcmil	5"	4"
A21	3000	8	750 kcmil	750 kcmil	5"	4"
A22	4000	11	750 kcmil	750 kcmil	5"	4"

FEEDER GENERAL NOTES:
1. COPPER CONDUCTORS ARE BASED ON TYPE THHN/THWN COPPER CONDUCTORS ONLY. CONDUITS BASED ON THHN/THWN CONDUCTORS ONLY. OTHER CONDUCTORS MAY REQUIRE LARGER CONDUITS.
2. ALUMINUM CONDUCTORS ARE BASED ON TYPE XHHN COMPACT STRANDED ALUMINUM CONDUCTORS ONLY. CONDUITS BASED ON XHHN CONDUCTORS ONLY. OTHER CONDUCTORS MAY REQUIRE LARGER CONDUITS.

COPPER FEEDERS

ID	NOMINAL CIRCUIT RATING	SETS	CONDUCTORS	BOND	CONDUIT W/ NEUTRAL (4W)	CONDUIT W/O NEUTRAL (3W)	MAXIMUM LENGTH*
C01	20	1	#12	#12	3/4"	3/4"	
C02	30	1	#10	#12	3/4"	3/4"	
C03	40	1	#8	#10	3/4"	3/4"	
C04	50	1	#6	#10	1"	3/4"	
C05A	60	1	#4	#10	1"	1"	*BASED ON 75 DEGREE
C05B	60	1	#4	#10	1 1/4"	1 1/4"	*BASED ON 60 DEGREE
C06	70	1	#4	#8	1 1/4"	1 1/4"	
C07A	80	1	#4	#8	1 1/4"	1 1/4"	*BASED ON 75 DEGREE
C07B	80	1	#3	#8	1 1/4"	1 1/4"	*BASED ON 60 DEGREE
C08	90	1	#3	#8	1 1/4"	1 1/4"	
C09A	100	1	#3	#8	1 1/4"	1 1/4"	*BASED ON 75 DEGREE
C09B	100	1	#1	#6	1 1/2"	1 1/2"	*BASED ON 60 DEGREE
C10	125	1	#1	#6	1 1/2"	1 1/2"	
C11	150	1	#1/0	#6	2"	1 1/2"	
C12	175	1	#2/0	#6	2"	2"	
C13	200	1	#3/0	#6	2"	2"	
C14	225	1	#4/0	#4	2 1/2"	2"	
C15	250	1	250 kcmil	#4	2 1/2"	2 1/2"	
C16	300	1	350 kcmil	#3	3"	2 1/2"	
C17	350	1	500 kcmil	#3	3 1/2"	3"	
C18	400	2	#3/0	#6	2"	2"	
C19	450	2	#4/0	#4	2 1/2"	2"	
C20	500	2	250 kcmil	#4	2 1/2"	2 1/2"	
C21	600	2	350 kcmil	#3	3"	2 1/2"	
C22A	800	3	350 kcmil	#3	3"	2 1/2"	
C22B	800	4	#3/0	#6	2"	2"	
C23	900	3	350 kcmil	#3	3"	2 1/2"	
C24	1000	3	500 kcmil	#3	3 1/2"	3"	
C25	1200	4	350 kcmil	#3	3"	2 1/2"	
C26	1600	5	500 kcmil	#3	3 1/2"	3"	
C27	2000	6	500 kcmil	#3	3 1/2"	3"	
C28	2500	7	500 kcmil	#3	3 1/2"	3"	
C29	3000	8	500 kcmil	#3	3 1/2"	3"	
C30	4000	11	500 kcmil	#3	3 1/2"	3"	

REGISTERED PROFESSIONAL ENGINEER
PAUL K. ERICSON
No. 11219
exp.06/30/2025
ELECTRICAL
STATE OF CALIFORNIA

05-13-2024

Stantec
801 S. Figueroa Street, Suite 300
Los Angeles, CA 90017

Copyright Reserved
The contractor shall verify and be responsible for all dimensions. DO NOT scale the drawing; any errors or omissions shall be reported to Stantec without delay.
The copyrights to all designs and drawings are the property of Stantec. Reproduction or use for any purpose other than that authorized by Stantec is prohibited.

REVISION	DESCRIPTION	DATE
4	100% RESUBMITTAL	05/13/2024
3	100% CONSTRUCTION DRAWING SUBMITTAL	03/27/2024
2	90% UPDATED CONSTRUCTION SUBMITTAL	02/13/2024
1	90% CONSTRUCTION DRAWING SUBMITTAL	12/07/2023

REPLACEMENT OF MECHANICAL UNITS AT SANTA ANA BUS BASE
4301 W. MAC ARTHUR BLVD., SANTA ANA, CA

SCHEMATIC SYMBOLS AND ELECTRICAL DRAWING INDEX

JOB #:
DESIGN BY: IZ
DRAWN BY: ERL
CHECKED BY: PKE
DATE: 02/13/2024
SCALE: As indicated
SHEET: E-002M

OCTA
ORANGE COUNTY TRANSPORTATION AUTHORITY
550 SOUTH MAIN STREET, ORANGE, CA

Autodesk Docs://2014233703_Santa_Ana_Bus/elec_SantaAnaBus_2014233703.rvt
5/8/2024 9:59:42 AM

IFB 4-2550 EXHIBIT B

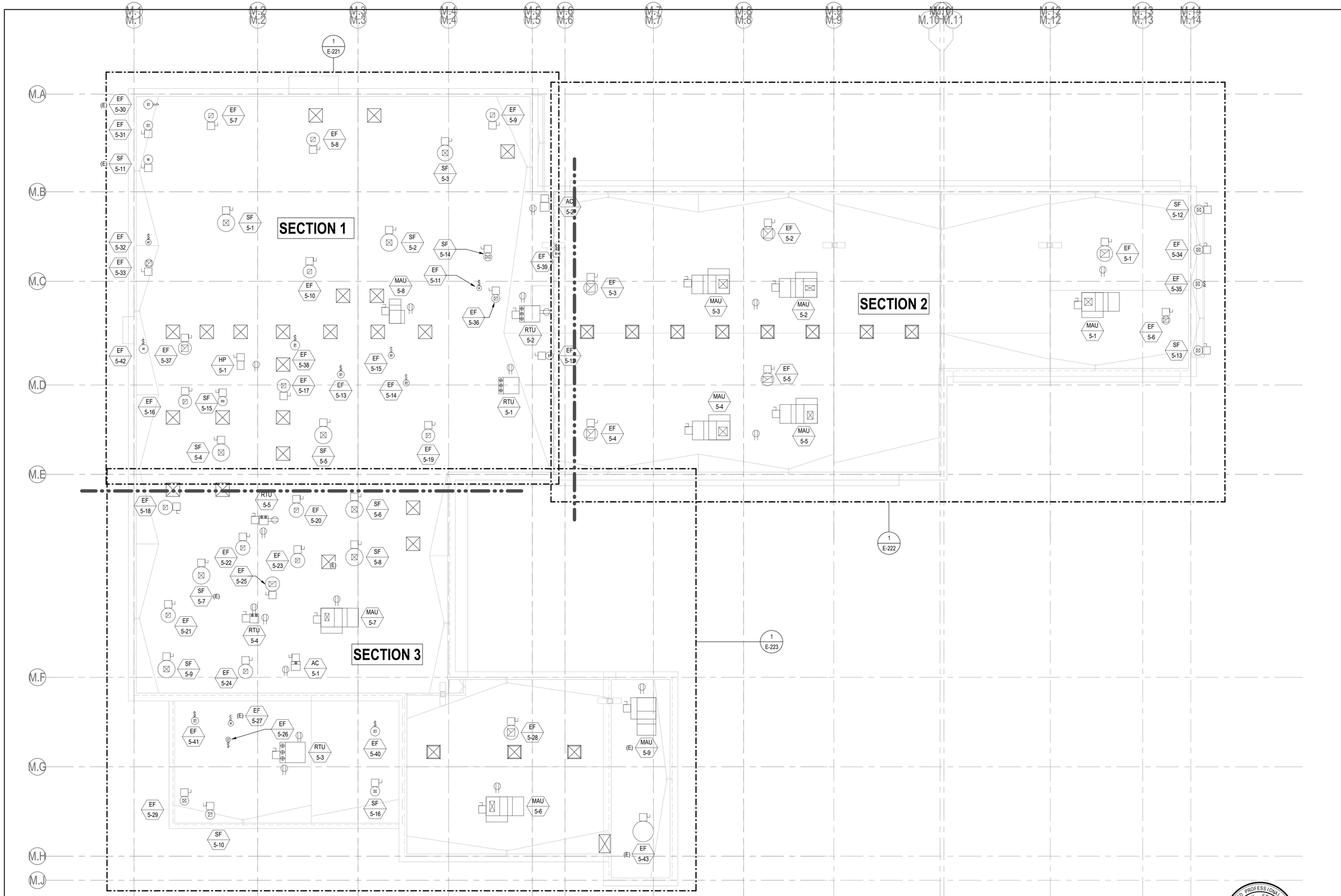

1 E-220 **MAINTENANCE BUILDING OVERALL ELECTRICAL ROOF PLAN**

1" = 20'-0"

N

REGISTERED PROFESSIONAL ENGINEER PAUL K. ERICSON No. 11219 exp.06/30/2025 ELECTRICAL STATE OF CALIFORNIA

05-13-2024

Stantec

801 S. Figueroa Street, Suite 300
Los Angeles, CA 90017

Copyright Reserved
The contractor shall verify and be responsible for all dimensions. DO NOT scale the drawing - any discrepancies shall be reported to Stantec without delay.
This drawing is the property of Stantec and shall not be reproduced or used for other purposes.

REVISION	DESCRIPTION	DATE
4	100% RESUBMITTAL	05/13/2024
3	100% CONSTRUCTION DRAWING SUBMITTAL	03/27/2024
2	90% UPDATED CONSTRUCTION SUBMITTAL	02/13/2024
1	90% CONSTRUCTION DRAWING SUBMITTAL	12/07/2023

REPLACEMENT OF MECHANICAL UNITS AT SANTA ANA BUS BASE

4301 W. MAC ARTHUR BLVD., SANTA ANA, CA

MAINTENANCE BUILDING OVERALL ELECTRICAL ROOF PLAN

JOB #:	
DESIGN BY:	IZ
DRAWN BY:	ERL
CHECKED BY:	PKE
DATE:	02/13/2024
SCALE:	1" = 20'-0"
SHEET:	E-220M

OCTA

ORANGE COUNTY TRANSPORTATION AUTHORITY
550 SOUTH MAIN STREET, ORANGE, CA

Autodesk Docs://2014233703_Santa_Ana_Bus/elec_SantaAnaBus_2014233703.rvt

5/8/2024 9:59:43 AM

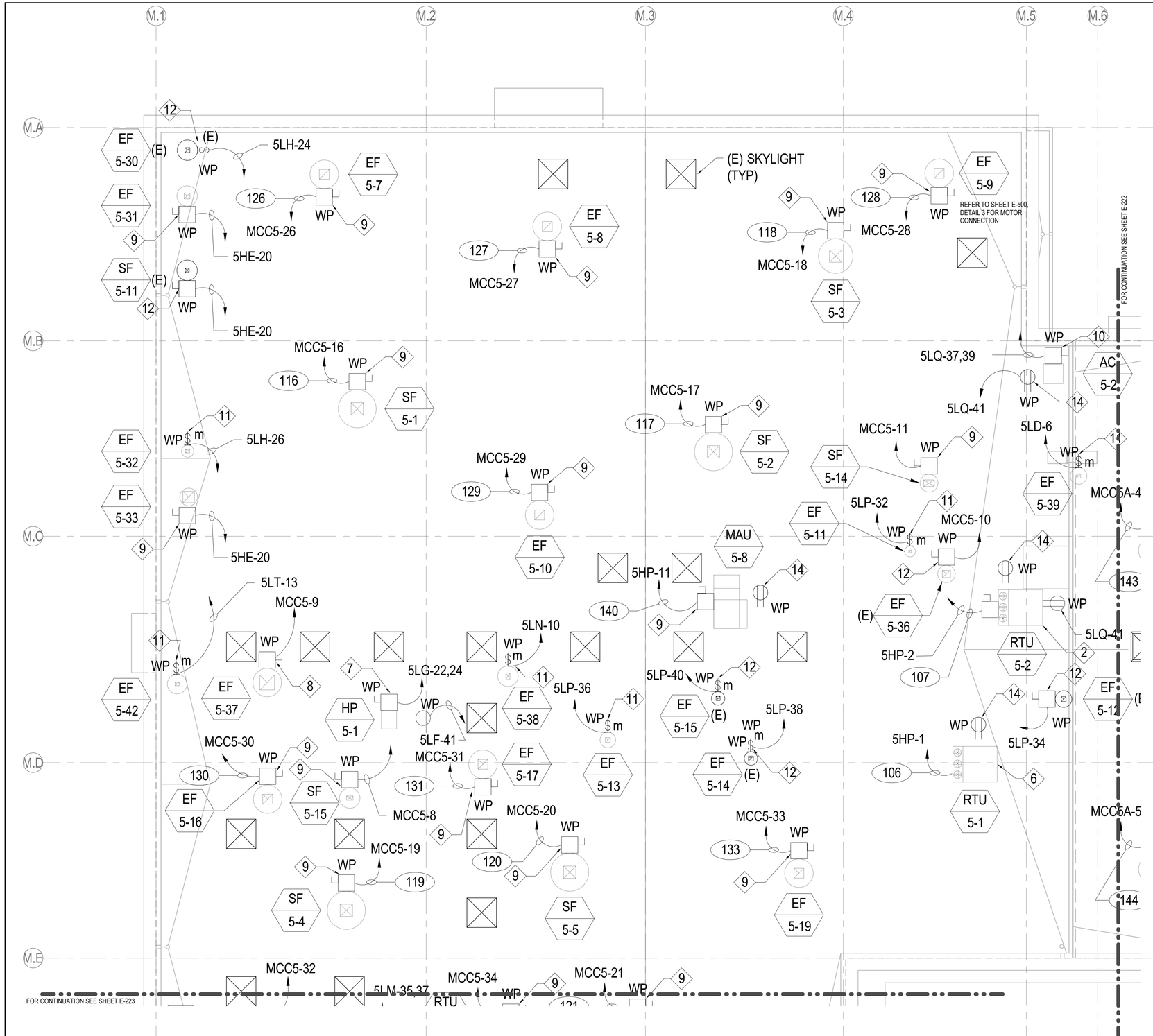

GENERAL NOTES

1. ALL THE SIZES OF ELECTRICAL DISCONNECT SWITCHES, MOTOR RATED SWITCHES, CONDUIT AND WIRE SIZES FOR THE MECHANICAL EQUIPMENT ARE BASED ON NEW MECHANICAL EQUIPMENT THAT IS GOING TO BE INSTALLED.
2. ALL ELECTRICAL EQUIPMENT INSTALLED OUTDOORS SHALL BE IN WEATHER PROOF ENCLOSURES PER CEC 406.
3. REFER TO SHEETS E-800, E-801 AND E-802 CONDUIT SCHEDULES FOR VOLTAGE, PHASE, CONDUIT AND WIRE SIZES FOR ALL MECHANICAL EQUIPMENT BEING REPLACED.
4. ALL THE EXISTING MECHANICAL CONNECTIONS (LOW VOLTAGE, CONNECTIONS TO EXISTING STARTERS, FIRE ALARM SYSTEM) SHALL BE PROVIDED FOR THE NEW MECHANICAL EQUIPMENT.
5. NEW DISCONNECT SWITCHES TO BE PROVIDED AND INSTALLED TO MATCH EXISTING CONDITIONS.
6. KEY NOTES ARE PER SHEET NOT PER PROJECT.

KEY NOTES:

2 PROVIDE NEW 480V, 3PH, 60A DS, 50AF. CONNECT TO EXISTING CIRCUIT AS INDICATED, CONTRACTOR TO REPLACE THE PORTION OF CONDUIT THAT IS EXPOSED ABOVE THE ROOF AND PROVIDE NEW CONDUCTORS TO MATCH EXISTING. EXTEND EXISTING CONDUIT AND WIRES AND CONNECT THE NEW INTEGRATED RECEPTACLE PROVIDED WITH NEW MECHANICAL EQUIPMENT TO EXISTING CIRCUIT AS NDICATED.

6 PROVIDE NEW 480V, 3PH, 60A DS, 50AF. CONNECT TO EXISTING CIRCUIT AS INDICATED, CONTRACTOR TO REPLACE THE PORTION OF CONDUIT THAT IS EXPOSED ABOVE THE ROOF AND PROVIDE NEW CONDUCTORS TO MATCH EXISTING.

7 PROVIDE NEW 208V, 1PH, 30A DS, 30AF. CONNECT TO EXISTING CIRCUIT AS INDICATED, CONTRACTOR TO REPLACE THE PORTION OF CONDUIT THAT IS EXPOSED ABOVE THE ROOF AND PROVIDE NEW CONDUCTORS TO MATCH EXISTING.

8 PROVIDE NEW 480V, 3PH, 30A DS, 20AF. CONNECT TO EXISTING CIRCUIT AS INDICATED, CONTRACTOR TO REPLACE THE PORTION OF CONDUIT THAT IS EXPOSED ABOVE THE ROOF AND PROVIDE NEW CONDUCTORS TO MATCH EXISTING.

9 PROVIDE NEW 480V, 3PH, 30A DS, 15AF. CONNECT TO EXISTING CIRCUIT AS INDICATED, CONTRACTOR TO REPLACE THE PORTION OF CONDUIT THAT IS EXPOSED ABOVE THE ROOF AND PROVIDE NEW CONDUCTORS TO MATCH EXISTING.

10 PROVIDE NEW 208V, 1PH, 30A DS, 25AF. CONNECT TO EXISTING CIRCUIT AS INDICATED, CONTRACTOR TO REPLACE THE PORTION OF CONDUIT THAT IS EXPOSED ABOVE THE ROOF AND PROVIDE NEW CONDUCTORS TO MATCH EXISTING.

11 PROVIDE NEW 120V, 1PH, MOTOR RATED MANUAL SWITCH. CONNECT TO EXISTING CIRCUIT AS INDICATED, CONTRACTOR TO REPLACE THE PORTION OF CONDUIT THAT IS EXPOSED ABOVE THE ROOF AND PROVIDE NEW CONDUCTORS TO MATCH EXISTING.

12 EXISTING MECHANICAL EQUIPMENT TO REMAIN. PRESERVE ALL ELECTRICAL CONNECTIONS, COVER UP DURING CONSTRUCTION TO PROTECT IN PLACE FROM DUST AND DAMAGE.

14 EXISTING RECEPTACLE TO REMAIN.

1 / E-221 **MAINTENANCE BUILDING SECTION ONE ELECTRICAL ROOF PLAN**

3/32" = 1'-0"

N

REGISTERED PROFESSIONAL ENGINEER PAUL K. ERICSON No. 11219 exp.06/30/2025 ELECTRICAL STATE OF CALIFORNIA

05-13-2024

Stantec
801 S. Figueroa Street, Suite 300
Los Angeles, CA 90017

Copyright Reserved
The contractor shall verify and be responsible for all dimensions. DO NOT scale the drawing - any discrepancies shall be reported to Stantec without delay.
This drawing is the property of Stantec and shall not be reproduced in whole or in part. Reproduction or use for any purpose other than that authorized by Stantec is prohibited.

REVISION	DESCRIPTION	DATE
4	100% RESUBMITTAL	05/13/2024
3	100% CONSTRUCTION DRAWING SUBMITTAL	03/27/2024
2	90% UPDATED CONSTRUCTION SUBMITTAL	02/13/2024
1	90% CONSTRUCTION DRAWING SUBMITTAL	12/07/2023

REPLACEMENT OF MECHANICAL UNITS AT SANTA ANA BUS BASE
4301 W. MAC ARTHUR BLVD., SANTA ANA, CA

MAINTENANCE BUILDING SECTION ONE ELECTRICAL ROOF PLAN

JOB #:	
DESIGN BY:	IZ
DRAWN BY:	ERL
CHECKED BY:	PKE
DATE:	02/13/2024
SCALE:	As indicated
SHEET:	E-221M

OCTA
ORANGE COUNTY TRANSPORTATION AUTHORITY
550 SOUTH MAIN STREET, ORANGE, CA

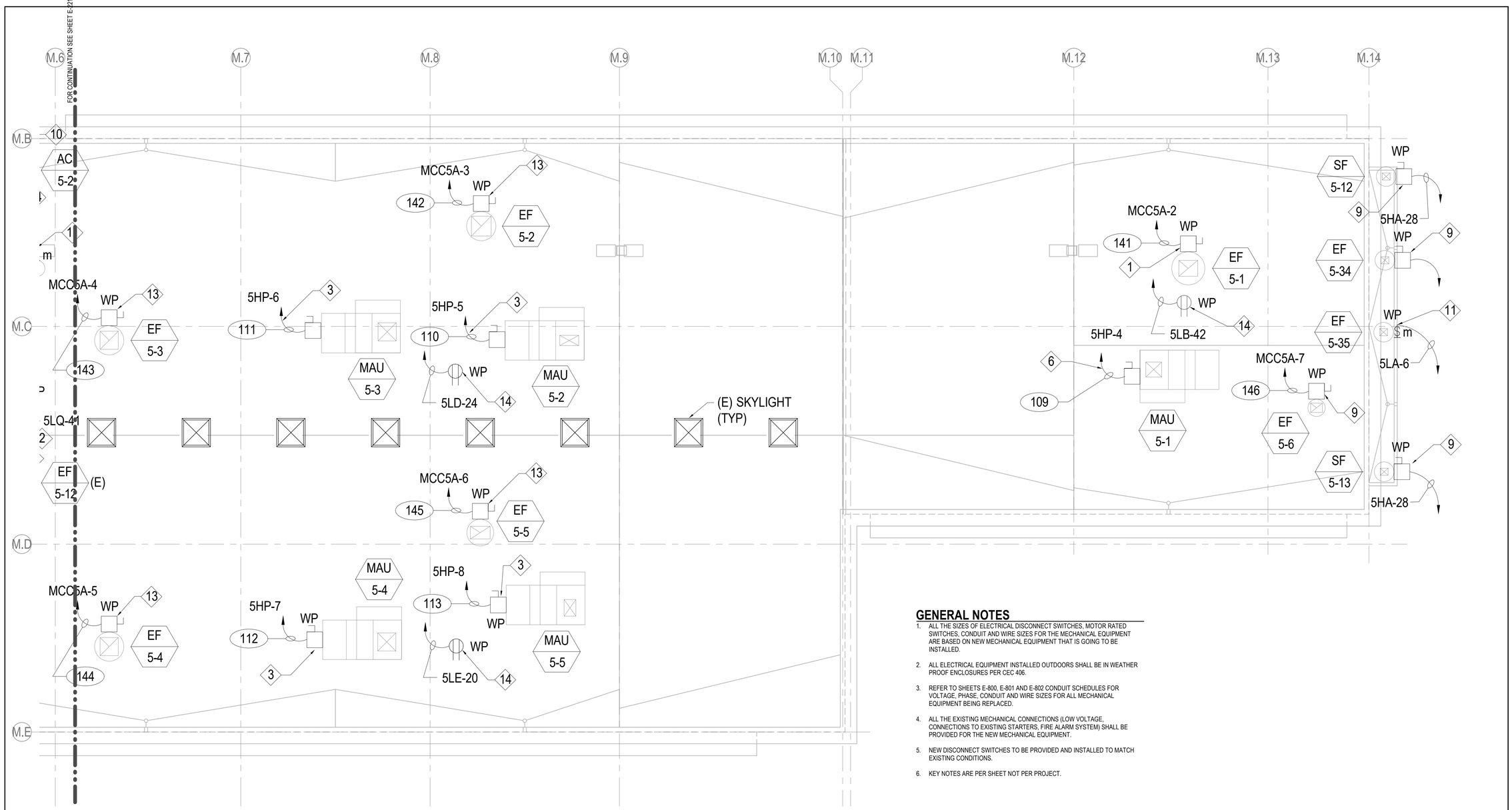

1 MAINTENANCE BUILDING SECTION TWO ELECTRICAL ROOF PLAN

E-222

3/32" = 1'-0"

N

GENERAL NOTES

1. ALL THE SIZES OF ELECTRICAL DISCONNECT SWITCHES, MOTOR RATED SWITCHES, CONDUIT AND WIRE SIZES FOR THE MECHANICAL EQUIPMENT ARE BASED ON NEW MECHANICAL EQUIPMENT THAT IS GOING TO BE INSTALLED.
2. ALL ELECTRICAL EQUIPMENT INSTALLED OUTDOORS SHALL BE IN WEATHER PROOF ENCLOSURES PER CEC 406.
3. REFER TO SHEETS E-800, E-801 AND E-802 CONDUIT SCHEDULES FOR VOLTAGE, PHASE, CONDUIT AND WIRE SIZES FOR ALL MECHANICAL EQUIPMENT BEING REPLACED.
4. ALL THE EXISTING MECHANICAL CONNECTIONS (LOW VOLTAGE, CONNECTIONS TO EXISTING STARTERS, FIRE ALARM SYSTEM) SHALL BE PROVIDED FOR THE NEW MECHANICAL EQUIPMENT.
5. NEW DISCONNECT SWITCHES TO BE PROVIDED AND INSTALLED TO MATCH EXISTING CONDITIONS.
6. KEY NOTES ARE PER SHEET NOT PER PROJECT.

KEY NOTES:

1 PROVIDE NEW 480V, 3PH, 100A DS, 70AF. CONNECT TO EXISTING CIRCUIT AS INDICATED, RE-USE EXISTING CONDUIT AND PROVIDE NEW CONDUCTORS TO MATCH EXISTING.

3 PROVIDE NEW 480V, 3PH, 60A DS, 40AF. CONNECT TO EXISTING CIRCUIT AS INDICATED, CONTRACTOR TO REPLACE THE PORTION OF CONDUIT THAT IS EXPOSED ABOVE THE ROOF AND PROVIDE NEW CONDUCTORS TO MATCH EXISTING.

6 PROVIDE NEW 480V, 3PH, 60A DS, 50AF. CONNECT TO EXISTING CIRCUIT AS INDICATED, CONTRACTOR TO REPLACE THE PORTION OF CONDUIT THAT IS EXPOSED ABOVE THE ROOF AND PROVIDE NEW CONDUCTORS TO MATCH EXISTING.

9 PROVIDE NEW 480V, 3PH, 30A DS, 15AF. CONNECT TO EXISTING CIRCUIT AS INDICATED, CONTRACTOR TO REPLACE THE PORTION OF CONDUIT THAT IS EXPOSED ABOVE THE ROOF AND PROVIDE NEW CONDUCTORS TO MATCH EXISTING.

10 PROVIDE NEW 208V, 1PH, 30A DS, 25AF. CONNECT TO EXISTING CIRCUIT AS INDICATED, CONTRACTOR TO REPLACE THE PORTION OF CONDUIT THAT IS EXPOSED ABOVE THE ROOF AND PROVIDE NEW CONDUCTORS TO MATCH EXISTING.

11 PROVIDE NEW 120V, 1PH, MOTOR RATED MANUAL SWITCH. CONNECT TO EXISTING CIRCUIT AS INDICATED, CONTRACTOR TO REPLACE THE PORTION OF CONDUIT THAT IS EXPOSED ABOVE THE ROOF AND PROVIDE NEW CONDUCTORS TO MATCH EXISTING.

13 PROVIDE NEW 480V, 3PH, 60A DS, 45AF. CONNECT TO EXISTING CIRCUIT AS INDICATED, CONTRACTOR TO REPLACE THE PORTION OF CONDUIT THAT IS EXPOSED ABOVE THE ROOF AND PROVIDE NEW CONDUCTORS TO MATCH EXISTING.

14 EXISTING RECEPTACLE TO REMAIN.

REGISTERED PROFESSIONAL ENGINEER
PAUL K. ERICSON
No. 11219
exp.06/30/2025
ELECTRICAL
STATE OF CALIFORNIA

05-13-2024

Stantec
801 S. Figueroa Street, Suite 300
Los Angeles, CA 90017

Copyright Reserved
The contractor shall verify and be responsible for all dimensions. DO NOT scale the drawing - any errors or omissions shall be reported to Stantec without delay.
This drawing is the property of Stantec and must not be altered or reproduced. Reproduction or use for any purpose other than that authorized by Stantec is forbidden.

REVISION	DESCRIPTION	DATE
4	100% RESUBMITTAL	05/13/2024
3	100% CONSTRUCTION DRAWING SUBMITTAL	03/27/2024
2	90% UPDATED CONSTRUCTION SUBMITTAL	02/13/2024
1	90% CONSTRUCTION DRAWING SUBMITTAL	12/07/2023

REPLACEMENT OF MECHANICAL UNITS AT SANTA ANA BUS BASE

4301 W. MAC ARTHUR BLVD., SANTA ANA, CA

MAINTENANCE BUILDING SECTION TWO ELECTRICAL ROOF PLAN

JOB #:	
DESIGN BY:	IZ
DRAWN BY:	ERL
CHECKED BY:	PKE
DATE:	02/13/2024
SCALE:	As indicated
SHEET:	E-222M

OCTA

ORANGE COUNTY
TRANSPORTATION AUTHORITY
550 SOUTH MAIN STREET, ORANGE, CA

Autodesk Docs://2014233703_Santa_Ana_Bus/elec_SantaAnaBus_2014233703.rvt

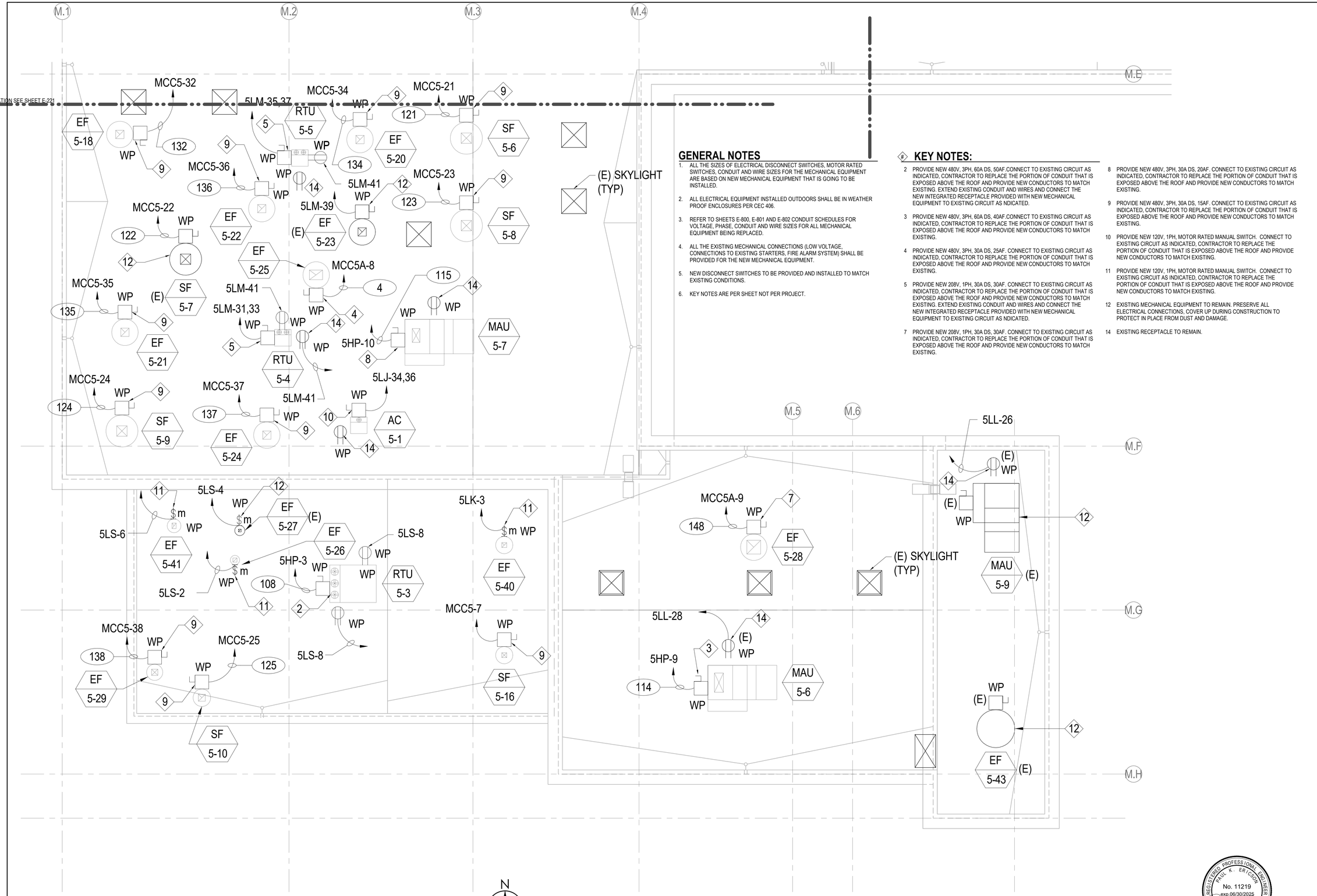

GENERAL NOTES

1. ALL THE SIZES OF ELECTRICAL DISCONNECT SWITCHES, MOTOR RATED SWITCHES, CONDUIT AND WIRE SIZES FOR THE MECHANICAL EQUIPMENT ARE BASED ON NEW MECHANICAL EQUIPMENT THAT IS GOING TO BE INSTALLED.
2. ALL ELECTRICAL EQUIPMENT INSTALLED OUTDOORS SHALL BE IN WEATHER PROOF ENCLOSURES PER CEC 406.
3. REFER TO SHEETS E-800, E-801 AND E-802 CONDUIT SCHEDULES FOR VOLTAGE, PHASE, CONDUIT AND WIRE SIZES FOR ALL MECHANICAL EQUIPMENT BEING REPLACED.
4. ALL THE EXISTING MECHANICAL CONNECTIONS (LOW VOLTAGE, CONNECTIONS TO EXISTING STARTERS, FIRE ALARM SYSTEM) SHALL BE PROVIDED FOR THE NEW MECHANICAL EQUIPMENT.
5. NEW DISCONNECT SWITCHES TO BE PROVIDED AND INSTALLED TO MATCH EXISTING CONDITIONS.
6. KEY NOTES ARE PER SHEET NOT PER PROJECT.

KEY NOTES:

2 PROVIDE NEW 480V, 3PH, 60A DS, 50AF.CONNECT TO EXISTING CIRCUIT AS INDICATED, CONTRACTOR TO REPLACE THE PORTION OF CONDUIT THAT IS EXPOSED ABOVE THE ROOF AND PROVIDE NEW CONDUCTORS TO MATCH EXISTING. EXTEND EXISTING CONDUIT AND WIRES AND CONNECT THE NEW INTEGRATED RECEPTACLE PROVIDED WITH NEW MECHANICAL EQUIPMENT TO EXISTING CIRCUIT AS NDICATED.

3 PROVIDE NEW 480V, 3PH, 60A DS, 40AF.CONNECT TO EXISTING CIRCUIT AS INDICATED, CONTRACTOR TO REPLACE THE PORTION OF CONDUIT THAT IS EXPOSED ABOVE THE ROOF AND PROVIDE NEW CONDUCTORS TO MATCH EXISTING.

4 PROVIDE NEW 480V, 3PH, 30A DS, 25AF. CONNECT TO EXISTING CIRCUIT AS INDICATED, CONTRACTOR TO REPLACE THE PORTION OF CONDUIT THAT IS EXPOSED ABOVE THE ROOF AND PROVIDE NEW CONDUCTORS TO MATCH EXISTING.

5 PROVIDE NEW 208V, 1PH, 30A DS, 30AF. CONNECT TO EXISTING CIRCUIT AS INDICATED, CONTRACTOR TO REPLACE THE PORTION OF CONDUIT THAT IS EXPOSED ABOVE THE ROOF AND PROVIDE NEW CONDUCTORS TO MATCH EXISTING. EXTEND EXISTING CONDUIT AND WIRES AND CONNECT THE NEW INTEGRATED RECEPTACLE PROVIDED WITH NEW MECHANICAL EQUIPMENT TO EXISTING CIRCUIT AS NDICATED.

7 PROVIDE NEW 208V, 1PH, 30A DS, 30AF. CONNECT TO EXISTING CIRCUIT AS INDICATED, CONTRACTOR TO REPLACE THE PORTION OF CONDUIT THAT IS EXPOSED ABOVE THE ROOF AND PROVIDE NEW CONDUCTORS TO MATCH EXISTING.

8 PROVIDE NEW 480V, 3PH, 30A DS, 20AF. CONNECT TO EXISTING CIRCUIT AS INDICATED, CONTRACTOR TO REPLACE THE PORTION OF CONDUIT THAT IS EXPOSED ABOVE THE ROOF AND PROVIDE NEW CONDUCTORS TO MATCH EXISTING.

9 PROVIDE NEW 480V, 3PH, 30A DS, 15AF. CONNECT TO EXISTING CIRCUIT AS INDICATED, CONTRACTOR TO REPLACE THE PORTION OF CONDUIT THAT IS EXPOSED ABOVE THE ROOF AND PROVIDE NEW CONDUCTORS TO MATCH EXISTING.

10 PROVIDE NEW 120V, 1PH, MOTOR RATED MANUAL SWITCH. CONNECT TO EXISTING CIRCUIT AS INDICATED, CONTRACTOR TO REPLACE THE PORTION OF CONDUIT THAT IS EXPOSED ABOVE THE ROOF AND PROVIDE NEW CONDUCTORS TO MATCH EXISTING.

11 PROVIDE NEW 120V, 1PH, MOTOR RATED MANUAL SWITCH. CONNECT TO EXISTING CIRCUIT AS INDICATED, CONTRACTOR TO REPLACE THE PORTION OF CONDUIT THAT IS EXPOSED ABOVE THE ROOF AND PROVIDE NEW CONDUCTORS TO MATCH EXISTING.

12 EXISTING MECHANICAL EQUIPMENT TO REMAIN. PRESERVE ALL ELECTRICAL CONNECTIONS, COVER UP DURING CONSTRUCTION TO PROTECT IN PLACE FROM DUST AND DAMAGE.

14 EXISTING RECEPTACLE TO REMAIN.

1 E-223 **MAINTENANCE BUILDING SECTION THREE ELECTRICAL ROOF PLAN**
3/32" = 1'-0"

REGISTERED PROFESSIONAL ENGINEER PAUL K. ERICSON No. 11219 exp.06/30/2025 ELECTRICAL STATE OF CALIFORNIA

05-13-2024

IFB 4-2550 EXHIBIT B

Stantec
801 S. Figueroa Street, Suite 300
Los Angeles, CA 90017

Copyright Reserved
The contractor shall verify and be responsible for all dimensions. DO NOT scale the drawing - any errors or omissions shall be reported to Stantec without delay.
This drawing is the property of Stantec and shall not be reproduced or used by others. Reproduction or use for any purpose other than that authorized by Stantec is forbidden.

REVISION	DESCRIPTION	DATE
4	100% RESUBMITTAL	05/13/2024
3	100% CONSTRUCTION DRAWING SUBMITTAL	03/27/2024
2	90% UPDATED CONSTRUCTION SUBMITTAL	02/13/2024
1	90% CONSTRUCTION DRAWING SUBMITTAL	12/07/2023

REPLACEMENT OF MECHANICAL UNITS AT SANTA ANA BUS BASE
4301 W. MAC ARTHUR BLVD., SANTA ANA, CA

MAINTENANCE BUILDING SECTION THREE ELECTRICAL ROOF PLAN

JOB #:	
DESIGN BY:	IZ
DRAWN BY:	ERL
CHECKED BY:	PKE
DATE:	02/13/2024
SCALE:	As indicated
SHEET:	E-223M

OCTA
ORANGE COUNTY TRANSPORTATION AUTHORITY
550 SOUTH MAIN STREET, ORANGE, CA

Autodesk Docs://2014233703_Santa_Ana_Bus/elec_SantaAnaBus_2014233703.rvt

5/8/2024 9:59:44 AM

IFB 4-2550 EXHIBIT B

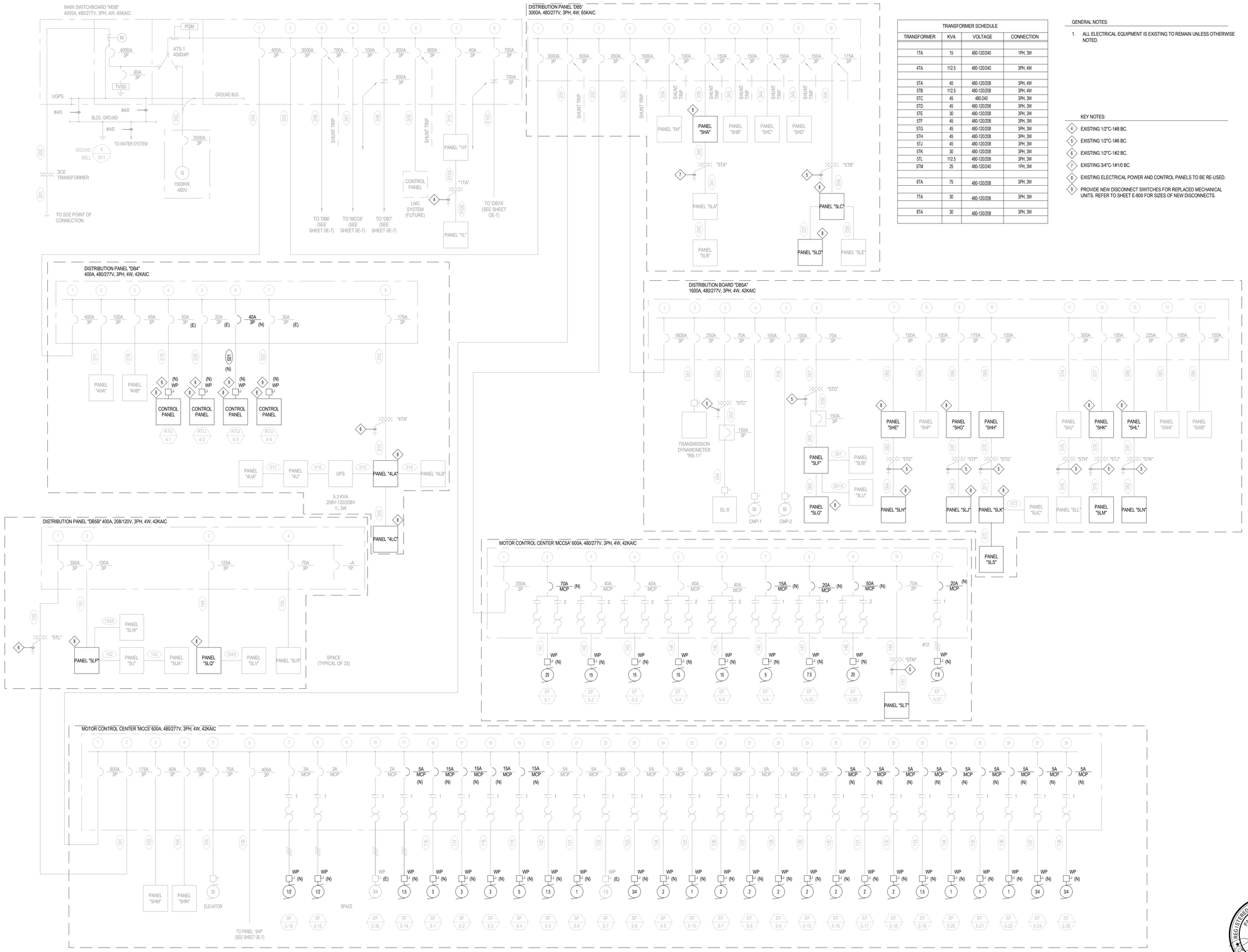

TRANSFORMER SCHEDULE			
TRANSFORMER	KVA	VOLTAGE	CONNECTION
1TA	15	480-120/240	1PH, 3W
4TA	112.5	480-120/240	3PH, 4W
5TA	45	480-120/208	3PH, 4W
5TB	112.5	480-120/208	3PH, 4W
5TC	45	480-240	3PH, 3W
5TD	45	480-120/208	3PH, 3W
5TE	30	480-120/208	3PH, 3W
5TF	45	480-120/208	3PH, 3W
5TG	45	480-120/208	3PH, 3W
5TH	45	480-120/208	3PH, 3W
5TJ	45	480-120/208	3PH, 3W
5TK	30	480-120/208	3PH, 3W
5TL	112.5	480-120/208	3PH, 3W
5TM	25	480-120/240	1PH, 3W
6TA	75	480-120/208	3PH, 3W
7TA	30	480-120/208	3PH, 3W
8TA	30	480-120/208	3PH, 3W

GENERAL NOTES:

1. ALL ELECTRICAL EQUIPMENT IS EXISTING TO REMAIN UNLESS OTHERWISE NOTED.

KEY NOTES:

4. EXISTING 1/2"C-1#8 BC.
5. EXISTING 1/2"C-1#6 BC.
6. EXISTING 1/2"C-1#2 BC.
7. EXISTING 3/4"C-1#1/0 BC.
8. EXISTING ELECTRICAL POWER AND CONTROL PANELS TO BE RE-USED.
9. PROVIDE NEW DISCONNECT SWITCHES FOR REPLACED MECHANICAL UNITS. REFER TO SHEET E-800 FOR SIZES OF NEW DISCONNECTS.

Stantec
801 S. Figueroa Street, Suite 300
Los Angeles, CA 90017

Copyright Reserved
The Contractor shall verify and be responsible for all dimensions. DO NOT scale the drawing - any errors or omissions shall be reported to Stantec without delay.
The Copyright Reserved shall be retained by the Stantec Corporation. Reproduction or use for any purpose other than that authorized by Stantec is forbidden.

REVISION	DESCRIPTION	DATE
4	100% RESUBMITTAL	05/13/2024
3	100% CONSTRUCTION DRAWING SUBMITTAL	03/27/2024
2	90% UPDATED CONSTRUCTION SUBMITTAL	02/13/2024
1	90% CONSTRUCTION DRAWING SUBMITTAL	12/07/2023

REPLACEMENT OF MECHANICAL UNITS AT SANTA ANA BUS BASE
4301 W. MAC ARTHUR BLVD., SANTA ANA, CA

ELECTRICAL SINGLE LINE DIAGRAM

JOB #:	
DESIGN BY:	IZ
DRAWN BY:	ERL
CHECKED BY:	PKE
DATE:	02/13/2024
SCALE:	NTS
SHEET:	E-600M

REGISTERED PROFESSIONAL ENGINEER
PAUL K. ERICSON
No. 11219
exp.06/30/2025
ELECTRICAL
STATE OF CALIFORNIA

05-13-2024

OCTA
ORANGE COUNTY TRANSPORTATION AUTHORITY
550 SOUTH MAIN STREET, ORANGE, CA

Autodesk Docs://2014233703_Santa_Ana_Bus/elec_SantaAnaBus_2014233703.rvt

5/8/2024 9:59:45 AM

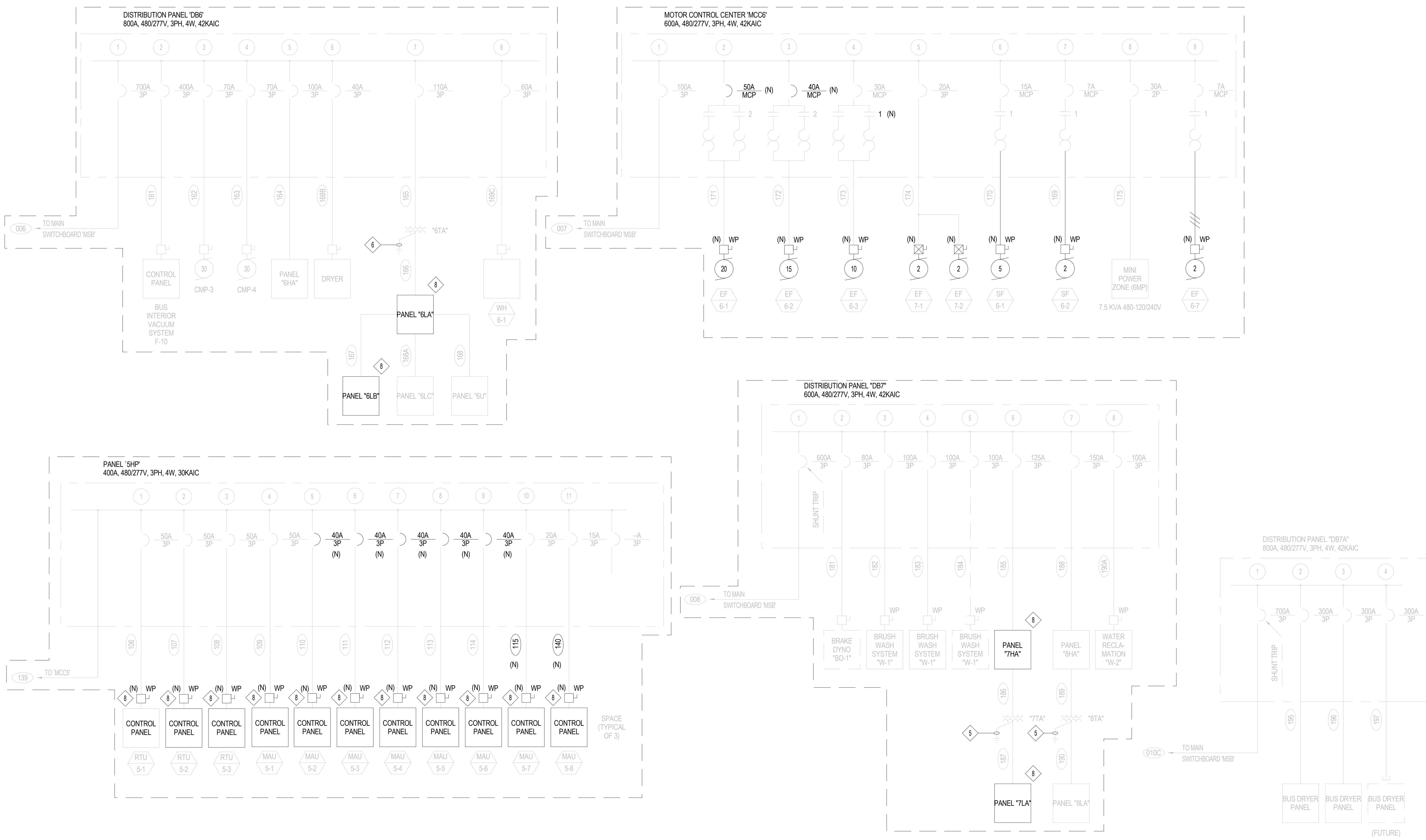

GENERAL NOTES:

1. ALL ELECTRICAL EQUIPMENT IS EXISTING TO REMAIN UNLESS OTHERWISE NOTED.

KEY NOTES:

4. EXISTING 1/2"C-1#8 BC.
5. EXISTING 1/2"C-1#6 BC.
6. EXISTING 1/2"C-1#2 BC.
7. EXISTING 3/4"C-1#1/0 BC.
8. EXISTING ELECTRICAL POWER AND CONTROL PANELS TO BE USED FOR REPLACED MECHANICAL UNITS.

DISTRIBUTION PANEL DB6

LOAD NAME	VOLTS	PH	CONNECTED HP	CONNECTED KVA	AMPS	REMARKS
F-10	480	3		253		
CMP-3	480	3	30	33		
CMP-4	480	3	30	33		
PANEL 6HA	480	3		53		
XFMR 6TA (PANEL 6LA)	480	3		68		
DRYER	480	3		21		
WH 6-1	480	3		36		
TOTAL	480	3		497	598	

MOTOR CONTROL CENTER MCC6

LOAD NAME	VOLTS	PH	CONNECTED HP	CONNECTED KVA	AMPS	REMARKS
EF 6-1	480	3	20	22.4		
EF 6-2	480	3	15	17.5		
EF 6-3	480	3	10	11.6		
EF 7-1, EF 7-2	480	3	2 x 2	5.6		
SF 6-1	480	3	5	6.3		
SF 6-2	480	3	2	2.8		
MINI POWER ZONE (6MP)	480	1		2.3		
EF 6-7	480	3	3	4.0		
TOTAL	480	3		72.5	87.2	

DISTRIBUTION PANEL DB7

LOAD NAME	VOLTS	PH	CONNECTED HP	CONNECTED KVA	AMPS	REMARKS
BD-1	480	3		45		
W-1	480	3		66		
W-1	480	3		66		
W-1	480	3		66		
PANEL 7HA	480	3		67		
PANEL 8HA	480	3		90		
W-2	480	3		36		
TOTAL	480	3		435	523	

DISTRIBUTION PANEL DB7A

LOAD NAME	VOLTS	PH	CONNECTED HP	CONNECTED KVA	AMPS	REMARKS
BUS DRYER PANEL	480	3	(9) 15	157		
BUS DRYER PANEL	480	3	(9) 15	157		
BUS DRYER PANEL	480	3	(9) 15	157		
TOTAL	480	3		471	567	

DISTRIBUTION PANEL DB5B

LOAD NAME	VOLTS	PH	CONNECTED HP	CONNECTED KVA	AMPS	REMARKS
PANEL 5LP	208	3		27		
PANEL 5LQ	208	3		36		
PANEL 5LR	208	3		19		
TOTAL	208	3		82	226	

MOTOR CONTROL CENTER MCC5A

LOAD NAME	VOLTS	PH	CONNECTED HP	CONNECTED KVA	AMPS	REMARKS
EF 5-1	480	3	25	28.3		
EF 5-2	480	3	15	17.5		
EF 5-3	480	3	15	17.5		
EF 5-4	480	3	15	17.5		
EF 5-5	480	3	15	17.5		
EF 5-6	480	3	5	6.3		
EF 5-25	480	3	7 1/2	9.1		
EF 5-28	480	3	20	22.4		
EF 5-37	480	3	7 1/2	9.1		
XFMR 5TM (PANEL 5LT)	480	1		18		
TOTAL	480	3		163.2	196.4	

DISTRIBUTION BOARD DB5A

LOAD NAME	VOLTS	PH	CONNECTED HP	CONNECTED KVA	AMPS	REMARKS
RB-11	480	3		150		
EL-9	480	3		43		
COMP. #1	480	3	50	54		
COMP. #2	480	3	50	54		
XFMR 5TD (PANEL 5LF)	480	3		45		
PANEL 5HE	480	3		73		
PANEL 5HF	480	3		79		
PANEL 5HG	480	3		115		
PANEL 5HH	480	3		45		
PANEL 5HJ	480	3		156		
PANEL 5HK	480	3		89		
PANEL 5HL	480	3		133		
PANEL 5WA	480	3		42		
PANEL 5WB	480	3		28		
TOTAL	480	3		1106	1330	

MOTOR CONTROL CENTER MCC5

LOAD NAME	VOLTS	PH	CONNECTED HP	CONNECTED KVA	AMPS	REMARKS
XFMR 5TL (DB5B)	480	3		82		
PANEL 5HM	480	3		8.4		
PANEL 5HN	480	3		48	238.9	287
PANEL 5HP	480	3		187		
ELEVATOR	480	3	30	33		
SF 5-1	480	3	3	4		
SF 5-2	480	3	3	4		
SF 5-3	480	3	3	4		
SF 5-4	480	3	5	6.3		
SF 5-5	480	3	1 1/2	2.5		
SF 5-6	480	3	1	1.7		
SF 5-7	480	3	1 1/2	2.5		
SF 5-8	480	3	3/4	1.3		
SF 5-9	480	3	2	2.8		
SF 5-10	480	3	1	1.7		
SF 5-14	480	3	1-1/2	2.5		
SF 5-15	480	3	1/2	0.9		
SF 5-16	480	3	1/2	0.9		
EF 5-7	480	3	2	2.8		
EF 5-8	480	3	2	2.8		
EF 5-9	480	3	2	2.8		
EF 5-10	480	3	2	2.8		
EF 5-16	480	3	2	2.8		
EF 5-17	480	3	2	2.8		
EF 5-18	480	3	2	2.8		
EF 5-19	480	3	1 1/2	2.5		
EF 5-20	480	3	1	1.7		
EF 5-21	480	3	1	1.7		
EF 5-22	480	3	1	1.7		
EF 5-24	480	3	3/4	1.3		
EF 5-29	480	3	1/2	0.9		
EF 5-36	480	3	3/4	1.3		
TOTAL	480	3		473.6	570	

PANEL 5HP

LOAD NAME	VOLTS	PH	CONNECTED HP	CONNECTED KVA	AMPS	REMARKS
RTU 5-1	480	3		40.7		
RTU 5-2	480	3		34		
RTU 5-3	480	3		34		
MAU 5-1	480	3	20	23.3		
MAU 5-2	480	3	15	18.4		
MAU 5-3	480	3	15	18.4		
MAU 5-4	480	3	15	18.4		
MAU 5-5	480	3	15	18.4		
MAU 5-6	480	3	15	18.4		
MAU 5-7	480	3	7 1/2	10		
MAU 5-8	480	3	3	4.9		
TOTAL	480	3		238.9	287	

MAIN SWITCHBOARD MSB LOAD SUMMARY / GENERATOR LOAD SUMMARY

LOAD NAME	VOLTS	PH	HP	NORMAL CONNECTED KVA	NORMAL CONNECTED AMPS	NORMAL DEMAND	GENERATOR DEMAND
DB4	480	3		242			
DB5	480	3		2142			
DB6	480	3		497			
MCC6	480	3		72.5			
DB7	480	3		435			
LNG SYSTEM	480	3		582			
PANEL 1H	480	3		16			
DB7A	480	3		471			
TOTAL	480	3		4457	5364	(0.7) x 5364 = 3755 AMPS	2216KVA - 435KVA (DB7) - 471KVA (DB7A) = 1310KVA

NOTE:
1. 1500KW GENERATOR = 1666KVA
2. THE GENERATOR ESTIMATED DEMAND LOAD IS 50% OF THE NORMAL CONNECTED LOAD (4433KVA x 0.5 = 2216KVA).
3. BUS WASH/BRAKE DYNO BUILDING WILL DE-ENERGIZED WHEN THE GENERATOR STARTS.

DISTRIBUTION PANEL DB4

LOAD NAME	VOLTS	PH	CONNECTED HP	CONNECTED KVA	AMPS	REMARKS
PANEL 4HA	480	3		52		
PANEL 4HB	480	3		9.4		
RTU 4-1	480	3		34		
RTU 4-2	480	3		15		
RTU 4-3	480	3		24		
RTU 4-4	480	3		21		
XFMR 4TA (PANEL 4LA)	480	3		87		
TOTAL	480	3		242	291	

DISTRIBUTION PANEL DB5

LOAD NAME	VOLTS	PH	CONNECTED HP	CONNECTED KVA	AMPS	REMARKS
MCC5	480	3		421.7		
MCC5A	480	3		163.2		
DB5A	480	3		1106		
PANEL 5H	480	3		23		
PANEL 5HA	480	3		99.4		
PANEL 5HB	480	3		88		
PANEL 5HC	480	3		88		
PANEL 5HD	480	3		83		
XFMR 5TB (PANEL 5LC)	480	3		70		
TOTAL	480	3		2142	2576	

Stantec
801 S. Figueroa Street, Suite 300
Los Angeles, CA 90017

Copyright Reserved
The Contractor shall verify and be responsible for all dimensions. DO NOT scale the drawing - any errors or omissions shall be reported to Stantec without delay.
The Copyrights to all designs and drawings are the property of Stantec. Reproduction or use for any purpose other than that authorized by Stantec is forbidden.

REVISION	DESCRIPTION	DATE
4	100% RESUBMITTAL	05/13/2024
3	100% CONSTRUCTION DRAWING SUBMITTAL	03/27/2024
2	90% UPDATED CONSTRUCTION SUBMITTAL	02/13/2024
1	90% CONSTRUCTION DRAWING SUBMITTAL	12/07/2023

REPLACEMENT OF MECHANICAL UNITS AT SANTA ANA BUS BASE

4301 W. MAC ARTHUR BLVD., SANTA ANA, CA

ELECTRICAL SINGLE LINE DIAGRAM

JOB #:
DESIGN BY: IZ
DRAWN BY: AD
CHECKED BY: PKE
DATE: 02/13/2024
SCALE: NTS
SHEET: E-601M

REGISTERED PROFESSIONAL ENGINEER PAUL K. ERICSON No. 11219 exp.06/30/2025 ELECTRICAL STATE OF CALIFORNIA

05-13-2024

OCTA
ORANGE COUNTY TRANSPORTATION AUTHORITY
550 SOUTH MAIN STREET, ORANGE, CA

IFB 4-2550 EXHIBIT B

Stantec Panel

Name:	**4LC**	Volts:	208Y/120V	Mains Type:	MLO	Type:	
Location:		Phases:	3	Mains Rating:	225 A	AIC Rating:	10K
Supply From:	4LA	Wires:	4	Max Rating:	225 A	Mounting:	Surface
Serves:				Lugs:	Single Lugs	Enclosure:	Type 1

Notes:

CKT	Circuit Description	Trip	Poles	CB	A		B		C		CB	Poles	Trip	Circuit Description	CKT	Key Note
1	Spare	20 A	1	--	180	**348**					--	**1**	20 A	**EF 4-1**	2	1
3	MTCC-4	20 A	1	--			100	**420**			--	**1**	20 A	**EF 4-2**	4	1
5	PAC-1	20 A	1	--					180	**420**	--	**1**	20 A	**EF 4-3**	6	1
7	LAV/UR CONTROLS	20 A	1	--	1200	**180**					--	**1**	20 A	**EF 4-4**	8	1
9	ANNUNCIATOR-4	20 A	1	--			180	50			--	1	20 A	EF TIME CLOCK	10	
11	MASTER DOOR CTRL PNL	20 A	1	--					500	360	--	1	20 A	ROOF RECEPTACLES	12	
13	MASTER INTERCOM CTRL PNL	20 A	1	--	500	100					--	1	20 A	IRRIGATION CONTROLLER - A	14	
15	SPACE	20 A	1	--			450	100			--	1	20 A	IRRIGATION CONTROLLER - B	16	
17	RECEPTACLES PBX	20 A	1	--					360	1840	--	1	40 A	BUS ENTRANCE GATE	18	
19	RECEPTACLES PBX	20 A	1	--	360	1840					--	1	40 A	BUS ENTRANCE GATE	20	
21	RECEPTACLES OC-12	20 A	1	--			360	1840			--	1	40 A	EMPLOYEE ENTRANCE GATE	22	
23	RECEPTACLES OC-12	20 A	1	--					360	600	--	1	20 A	BUS STOP SHELTER	24	
25	RECEPTACLES OC-12	30 A	1	--	500	3120					--	2	40 A	LOT MONITORING SHACK	26	
27	RECEPTACLE	20 A	1	--			180	3120			--	--	--	--	28	
29	HOOD	20 A	1	--					600	**1737**	--	2	**25 A**	**AC 4-1**	30	1
31	Spare	20 A	1	--	0	**1737**					--	**--**	--	**--**	32	
33	ELECTRIC RANGE	60 A	2	--			4350	**1737**			--	2	**25 A**	**AC 4-2**	34	1
35	--	--	--	--					4350	**1737**	--	**--**	--	**--**	36	
37	IRRIGATION CONTROLLER - C	20 A	1	--	0	**696**					--	1	20 A	**SF 4-1**	38	1
39	Space	--	1	--			--	100			--	1	20 A	DAMPERS	40	
41	Space	--	1	--					--	--	--	1	--	Space	42	

	A	B	C
Total Load:	**10.76 kVA**	**12.99 kVA**	**13.04 kVA**
Total Amps:	**90 A**	**111 A**	**112 A**

Load Classification	**Connected Load**	**Demand Factor**	**Estimated Demand**	**Panel Totals**	
Spare	36792 VA	100.00%	36792 VA		
				Total Conn. Load:	**36792 VA**
				Total Est. Demand:	**36792 VA**
				Total Conn.:	**102 A**
				Total Est. Demand:	**102 A**
				Existing Total Conn. Load:	**34710 VA**
				Existing Total Conn:	**96 A**

CB Legend (blank = circuit breaker):
G = GFCI S = Shunt Trip D = Switching Duty A = AFCI H = HID Rated C = HACR Rated † = Existing Circuit ‡ = Revised Circuit

Notes:

Stantec Panel

Name:	**5HA**	Volts:	480Y/277V	Mains Type:	MLO	Type:	
Location:	ELECTRICAL RM 184	Phases:	3	Mains Rating:	225 A	AIC Rating:	22K
Supply From:	DB5	Wires:	4	Max Rating:	225 A	Mounting:	Surface
Serves:				Lugs:	Single Lugs	Enclosure:	Type 1

Notes:

CKT	Circuit Description	Trip	Poles	CB	A		B		C		CB	Poles	Trip	Circuit Description	CKT	Key Note
1	SITE LIGHTING	20 A	1	--	2880	1600					--	1	20 A	WALL LIGHTING	2	
3	SITE LIGHTING	20 A	1	--			2880	1200			--	1	20 A	WALL LIGHTING	4	
5	SITE LIGHTING	20 A	1	--					2880	1200	--	1	20 A	WALL LIGHTING	6	
7	STEAM CLEAN LTG	20 A	1	--	2228	7167					--	3	60 A	SC-1 PARALLELOGRAM LIFT	8	
9	STEAM CLEAN LTG	20 A	1	--			2228	7167			--	--	--	--	10	
11	BAY LTG	20 A	1	--					1988	7167	--	--	--	--	12	
13	BAY LTG	20 A	1	--	1966	336					--	1	20 A	CANOPY LTG	14	
15	BAY LTG	20 A	1	--			2156	420			--	1	20 A	CANOPY LTG	16	
17	BAY LTG	20 A	1	--					2156	588	--	1	20 A	CANOPY LTG	18	
19	BAY LTG	20 A	1	--	1398	504					--	1	20 A	CANOPY LTG	20	
21	BAY LTG	20 A	1	--			1398	5600			--	3	30 A	SC-3 HOT PRESS. WASHER	22	
23	STEAM CLEAN LTG	20 A	1	--					1632	5600	--	--	--	--	24	
25	STEAM CLEAN LTG	20 A	1	--	1632	5600					--	--	--	--	26	
27	Space	--	1	--			--	**1496**			--	**3**	20 A	**SF 5-12, 5-13 & EF 5-34**	28	1
29	Space	--	1	--					--	**1496**	--	**--**	**--**	**--**	30	
31	Space	--	1	--	--	**1496**					--	**--**	**--**	**--**	32	
33	Space	--	1	--			--	--			--	1	--	Space	34	
35	Space	--	1	--					--	--	--	1	--	Space	36	
37	Space	--	1	--	--	8335					--	3	70 A	PANEL 5LA (VIA XFMR 5TA)	38	
39	Space	--	1	--			--	8530			--	--	--	--	40	
41	Space	--	1	--					--	6485	--	--	--	--	42	

	A	B	C
Total Load:	**35.14 kVA**	**33.08 kVA**	**31.19 kVA**
Total Amps:	**128 A**	**120 A**	**113 A**

Load Classification	**Connected Load**	**Demand Factor**	**Estimated Demand**	**Panel Totals**	
Spare	99409 VA	100.00%	99409 VA		
				Total Conn. Load:	**99409 VA**
				Total Est. Demand:	**99409 VA**
				Total Conn.:	**120 A**
				Total Est. Demand:	**120 A**
				Existing Total Conn. Load:	**98911 VA**
				Existing Total Conn:	**119 A**

CB Legend (blank = circuit breaker):
G = GFCI S = Shunt Trip D = Switching Duty A = AFCI H = HID Rated C = HACR Rated † = Existing Circuit ‡ = Revised Circuit

Notes:

KEY NOTES:

1 EXISTING EQUIPMENT TO BE REPLACED.

Stantec Panel

Name:	**5HE**	Volts:	480Y/277V	Mains Type:	MLO	Type:	
Location:	ELECTRICAL RM 137	Phases:	3	Mains Rating:	225 A	AIC Rating:	30K
Supply From:	DB5A	Wires:	4	Max Rating:	225 A	Mounting:	Surface
Serves:				Lugs:	Single Lugs	Enclosure:	Type 1

Notes:

CKT	Circuit Description	Trip	Poles	CB	A		B		C		CB	Poles	Trip	Circuit Description	CKT	Key Note
1	SITE LTG	20 A	1	--	960	1200					--	1	20 A	WALL LTG	2	
3	SITE LTG	20 A	1	--			960	1600			--	1	20 A	WALL LTG	4	
5	SITE LTG	20 A	1	--					960	1284	--	1	20 A	WALL LTG	6	
7	PARTS ROOM LTG	20 A	1	--	2062	480					--	3	20 A	PS-1 STAK SYSTEM	8	
9	PARTS ROOM LTG	20 A	1	--			2002	480			--	--	--	--	10	
11	PARTS ROOM LTG	20 A	1	--					2760	480	--	--	--	--	12	
13	PARTS ROOM LTG	20 A	1	--	2760	4633					--	3	30 A	PS-10 FORKLIFT	14	
15	PARTS ROOM LTG	20 A	1	--			2645	4633			--	--	--	--	16	
17	PARTS ROOM LTG	20 A	1	--					2760	4633	--	--	--	--	18	
19	PARTS ROOM LTG	20 A	1	--	2243	**1884**					--	3	20 A	**EF 5-31, 5-33, & SF 5-11**	20	1
21	PARTS ROOM LTG	20 A	1	--			2090	**1884**			--	--	--	--	22	
23	PARTS ROOM LTG	20 A	1	--					2645	**1884**	--	--	--	--	24	
25	PARTS ROOM LTG	20 A	1	--	2530	0					--	1	20 A	Spare	26	
27	PARTS ROOM LTG	20 A	1	--			2415	0			--	1	20 A	Spare	28	
29	PARTS ROOM LTG	20 A	1	--					2530	0	--	1	20 A	Spare	30	
31	TEL, ELECT, LUBE, C.A. LTG	20 A	1	--	539	0					--	1	20 A	Spare	32	
33	TEL, ELECT, LUBE, C.A. LTG	20 A	1	--			385	0			--	1	20 A	Spare	34	
35	Spare	20 A	1	--					0	0	--	1	20 A	Spare	36	
37	Spare	20 A	1	--	0	6330					--	3	50 A	PANEL 5LH (VIA XFMR 5TE)	38	
39	Spare	20 A	1	--			0	3680			--	--	--	--	40	
41	Spare	20 A	1	--					0	4155	--	--	--	--	42	

	A	B	C
Total Load:	**25.62 kVA**	**22.77 kVA**	**24.09 kVA**
Total Amps:	**93 A**	**82 A**	**88 A**

Load Classification	**Connected Load**	**Demand Factor**	**Estimated Demand**	**Panel Totals**	
Spare	72486 VA	100.00%	72486 VA		
				Total Conn. Load:	**72486 VA**
				Total Est. Demand:	**72486 VA**
				Total Conn.:	**87 A**
				Total Est. Demand:	**87 A**
				Existing Total Conn. Load:	**73134 VA**
				Existing Total Conn:	**88 A**

CB Legend (blank = circuit breaker):
G = GFCI S = Shunt Trip D = Switching Duty A = AFCI H = HID Rated C = HACR Rated † = Existing Circuit ‡ = Revised Circuit

Notes:

Stantec Panel

Name:	**5HJ**	Volts:	480Y/277V	Mains Type:	MLO	Type:	
Location:	BODY 174	Phases:	3	Mains Rating:	400 A	AIC Rating:	22K
Supply From:	DB5A	Wires:	4	Max Rating:	400 A	Mounting:	Surface
Serves:				Lugs:	Single Lugs	Enclosure:	Type 1

Notes:

CKT	Circuit Description	Trip	Poles	CB	A		B		C		CB	Poles	Trip	Circuit Description	CKT
1	BP-1 IN-GROUND LIFT	30 A	3	--	3733	5600					--	3	50 A	V-1 COLLECTION VACUUM	2
3	--	--	--	--			3733	5600			--	--	--	--	4
5	--	--	--	--					3733	5600	--	--	--	--	6
7	BP-2 IN-GROUND LIFT	30 A	3	--	3733	504					--	1	20 A	CANOPY LTG	8
9	--	--	--	--			3733	420			--	1	20 A	CANOPY LTG	10
11	--	--	--	--					3733	0	--	1	20 A	SMOKER CANOPY LTG	12
13	BP-1 IN-GROUND LIFT	30 A	3	--	3733	0					--	1	20 A	Spare	14
15	--	--	--	--			3733	2134			--	1	20 A	BODY LTG	16
17	--	--	--	--					3733	2146	--	1	20 A	BODY LTG	18
19	BP-7 PAINT BOOTH	100 A	3	--	17800	0					--	1	20 A	LCP5D CONTROL	20
21	--	--	--	--			17800	1476			--	1	20 A	BODY LTG	22
23	--	--	--	--					17800	1834	--	1	20 A	BODY LTG	24
25	SM-1 SHEAR	20 A	3	--	2933	948					--	1	20 A	PAINT BOTH LTG	26
27	--	--	--	--			2933	711			--	1	20 A	VAC, STOR, PAINT MIX LTG	28
29	--	--	--	--					2933	1600	--	1	20 A	WALL LTG	30
31	SM-6 VERTICAL BAND SAW	20 A	3	--	1267	1600					--	1	20 A	WALL LTG	32
33	--	--	--	--			1267	1200			--	1	20 A	WALL LTG	34
35	--	--	--	--					1267	0	--	1	20 A	Spare	36
37	SM-20 OVERHEAD CRANE	20 A	3	--	1493	7540					--	3	70 A	PANEL 5LL (VIA XFMR 5TH)	38
39	--	--	--	--			1493	6280			--	--	--	--	40
41	--	--	--	--					1493	5990	--	--	--	--	42

	A	B	C
Total Load:	**50.88 kVA**	**52.51 kVA**	**51.86 kVA**
Total Amps:	**184 A**	**190 A**	**188 A**

Load Classification	**Connected Load**	**Demand Factor**	**Estimated Demand**	**Panel Totals**	
Spare	155259 VA	100.00%	155259 VA		
				Total Conn. Load:	**155259 VA**
				Total Est. Demand:	**155259 VA**
				Total Conn.:	**187 A**
				Total Est. Demand:	**187 A**

CB Legend (blank = circuit breaker):
G = GFCI S = Shunt Trip D = Switching Duty A = AFCI H = HID Rated C = HACR Rated † = Existing Circuit ‡ = Revised Circuit

Notes:

4LC	5HA
5HE	5HJ

REGISTERED PROFESSIONAL ENGINEER
PAUL K. ERICSON
No. 11219
exp.06/30/2025
ELECTRICAL
STATE OF CALIFORNIA

05-13-2024

Stantec
801 S. Figueroa Street, Suite 300
Los Angeles, CA 90017

Copyright Reserved
The Contractor shall verify and be responsible for all dimensions. DO NOT scale the drawing - any errors or omissions shall be reported to Stantec without delay.
The Copyrights to all designs and drawings are the property of Stantec. Reproduction or use for any purpose other than that authorized by Stantec is forbidden.

REVISION	DESCRIPTION	DATE
4	100% RESUBMITTAL	05/13/2024
3	100% CONSTRUCTION DRAWING SUBMITTAL	03/27/2024
2	90% UPDATED CONSTRUCTION SUBMITTAL	02/13/2024
1	90% CONSTRUCTION DRAWING SUBMITTAL	12/07/2023

REPLACEMENT OF MECHANICAL UNITS AT SANTA ANA BUS BASE
4301 W. MAC ARTHUR BLVD., SANTA ANA, CA

PANEL SCHEDULES

JOB #:	
DESIGN BY:	IZ
DRAWN BY:	AD
CHECKED BY:	PKE
DATE:	02/13/2024
SCALE:	NTS
SHEET:	**E-700M**

OCTA
ORANGE COUNTY
TRANSPORTATION AUTHORITY
550 SOUTH MAIN STREET, ORANGE, CA

Autodesk Docs://2014233703_Santa_Ana_Bus/elec_SantaAnaBus_2014233703.rvt
5/8/2024 9:59:47 AM

Stantec Panel

Name: **5LD** Volts: 208Y/120V Mains Type: MLO Type:
Location: RUNNING REPAIR AREA 178 Phases: 3 Mains Rating: 225 A AIC Rating: 10K
Supply From: 5LC Wires: 4 Max Rating: 225 A Mounting: Surface
Serves: Lugs: Single Lugs Enclosure: Type 1
Notes:

CKT	Circuit Description	Trip	Poles	CB	A		B		C		CB	Poles	Trip	Circuit Description	CKT
1	Spare	20 A	1	--	0	50					--	1	20 A	SOLENOID	2
3	Spare	20 A	1	--			0	50			--	1	20 A	SOLENOID	4
5	RECEPTACLES DROP	20 A	1	--					360	**276**	**--**	1	20 A	**EF 5-39**	6 (1)
7	B-4 BATTERY CHARGER	20 A	1	--	500	0					--	1	20 A	Spare	8
9	RECEPTACLES DROP	20 A	1	--			360	360			--	1	20 A	RECEPTACLES DROP	10
11	RECEPTACLES DROP	20 A	1	--					360	360	--	1	20 A	RECEPTACLES DROP	12
13	RECEPTACLES DROP	20 A	1	--	360	360					--	1	20 A	RECEPTACLES DROP	14
15	RECEPTACLES DROP	20 A	1	--			360	360			--	1	20 A	RECEPTACLES DROP	16
17	PR-27 FLUID MANAGEMENT	20 A	1	--					500	1375	--	2	20 A	PR-14 FILTER CRUSHER	18
19	PR-25 PARTS WASHER	20 A	1	--	670	1375					--	--	--	--	20
21	PR-27 FLUID MANAGEMENT	20 A	1	--			500	530			--	1	20 A	DRINKING FOUNTAIN DF 5-2	22
23	PR-25 PARTS WASHER	20 A	1	--					670	180	--	1	20 A	ROOF RECEPTACLES	24
25	RECEPTACLE B-4	20 A	1	--	180	1590					--	1	20 A	OVERHEAD SECT. DOOR	26
27	PR-27 FLUID MANAGEMENT	20 A	1	--			500	1590			--	1	20 A	OVERHEAD SECT. DOOR	28
29	RECEPTACLES	20 A	1	--					360	1590	--	1	20 A	OVERHEAD SECT. DOOR	30
31	RECEPTACLES	20 A	1	--	360	1590					--	1	20 A	OVERHEAD SECT. DOOR	32
33	WASTE OIL ALARM	20 A	1	--			0	1590			--	1	20 A	OVERHEAD SECT. DOOR	34
35	Spare	20 A	1	--					0	1590	--	1	20 A	OVERHEAD SECT. DOOR	36
37	Spare	20 A	1	--	0	1590					--	1	20 A	OVERHEAD SECT. DOOR	38
39	Spare	20 A	1	--			0	0			--	1	20 A	Spare	40
41	Spare	20 A	1	--					0	0	--	1	20 A	Spare	42
				Total Load:	**8.63 kVA**		**6.20 kVA**		**7.62 kVA**						
				Total Amps:	**74 A**		**52 A**		**65 A**						

Load Classification	Connected Load	Demand Factor	Estimated Demand	Panel Totals	
Spare	22446 VA	100.00%	22446 VA		
				Total Conn. Load:	**22446 VA**
				Total Est. Demand:	**22446 VA**
				Total Conn.:	**62 A**
				Total Est. Demand:	**62 A**
				Existing Total Conn. Load:	**22670 VA**
				Existing Total Conn:	**63 A**

CB Legend (blank = circuit breaker):
G = GFCI S = Shunt Trip D = Switching Duty A = AFCI H = HID Rated C = HACR Rated † = Existing Circuit ‡ = Revised Circuit
Notes:

Stantec Panel

Name: **5LG** Volts: 208Y/120V Mains Type: MLO Type:
Location: REBUILD 106 Phases: 3 Mains Rating: 225 A AIC Rating: 10K
Supply From: 5LF Wires: 4 Max Rating: 225 A Mounting: Surface
Serves: Lugs: Single Lugs Enclosure: Type 1
Notes:

CKT	Circuit Description	Trip	Poles	CB	A		B		C		CB	Poles	Trip	Circuit Description	CKT
1	RECEPTACLES	20 A	1	--	180	670					--	1	20 A	RB-25 JIB CRANE	2
3	RECEPTACLES	20 A	1	--			180	670			--	1	20 A	RB-25 JIB CRANE	4
5	RECEPTACLES	20 A	1	--					180	670	--	1	20 A	RB-25 JIB CRANE	6
7	RECEPTACLES	20 A	1	--	540	670					--	1	20 A	RB-25 JIB CRANE	8
9	RECEPTACLES	20 A	1	--			540	1000			--	1	20 A	EL-2 BUFFER/GRINDER	10
11	RECEPTACLES	20 A	1	--					360	180	--	1	20 A	EL-12 WORKBENCH	12
13	RB-1 WORKBENCH	20 A	1	--	360	360					--	1	20 A	RECEPTACLES	14
15	RB-1 WORKBENCH	20 A	1	--			180	360			--	1	20 A	RECEPTACLES	16
17	RB-1 WORKBENCH	20 A	1	--					180	180	--	1	20 A	RECEPTACLES	18
19	RB-1 WORKBENCH	20 A	1	--	180	180					--	1	20 A	EL-1 WORKBENCH W/VISE	20
21	RB-1 WORKBENCH	20 A	1	--			180	**2143**			**--**	**2**	**30 A**	**HP 5-1**	22 (1)
23	REC. OFFICE	20 A	1	--					180	**2143**	**--**	**--**	**--**	**--**	24
25	REC. OFFICE	20 A	1	--	180	510					--	1	20 A	UH 5-5	26
27	RB-8 BUFFER/GRINDER	20 A	1	--			1000	510			--	1	20 A	UH 5-9	28
29	RB-21 DRILL PRESS	20 A	1	--					1590	0	--	1	20 A	Spare	30
31	RB-3 TRANSM. DRAIN TABLE	20 A	1	--	540	0					--	1	20 A	Spare	32
33	RB-3 TRANSM. DRAIN TABLE	20 A	1	--			540	0			--	1	20 A	Spare	34
35	RB-3 TRANSM. DRAIN TABLE	20 A	1	--					360	0	--	1	20 A	Spare	36
37	RB-7 PARTS WASHER	20 A	1	--	180	0					--	1	20 A	Spare	38
39	Spare	20 A	1	--			0	0			--	1	20 A	Spare	40
41	Spare	20 A	1	--					0	0	--	1	20 A	Spare	42
				Total Load:	**4.55 kVA**		**7.30 kVA**		**6.02 kVA**						
				Total Amps:	**38 A**		**63 A**		**52 A**						

Load Classification	Connected Load	Demand Factor	Estimated Demand	Panel Totals	
Spare	17876 VA	100.00%	17876 VA		
				Total Conn. Load:	**17876 VA**
				Total Est. Demand:	**17876 VA**
				Total Conn.:	**50 A**
				Total Est. Demand:	**50 A**
				Existing Total Conn. Load:	**16630 VA**
				Existing Total Conn:	**46 A**

CB Legend (blank = circuit breaker):
G = GFCI S = Shunt Trip D = Switching Duty A = AFCI H = HID Rated C = HACR Rated † = Existing Circuit ‡ = Revised Circuit
Notes:

KEY NOTES:

1 EXISTING EQUIPMENT TO BE REPLACED.

Stantec Panel

Name: **5LH** Volts: 208Y/120V Mains Type: MCB Type:
Location: ELECTRICAL RM 137 Phases: 3 Mains Rating: 225 A AIC Rating: 10K
Supply From: 5HE Wires: 4 MCB Rating: 100 A Mounting: Surface
Serves: Lugs: Single Lugs Enclosure: Type 1
Notes:

CKT	Circuit Description	Trip	Poles	CB	A		B		C		CB	Poles	Trip	Circuit Description	CKT
1	RECEPTACLES	20 A	1	--	540	1040					--	2	20 A	AIR DRYER	2
3	RECEPTACLES	20 A	1	--			540	1040			--	--	--	--	4
5	RECEPTACLES	20 A	1	--					540	1040	--	2	20 A	AIR DRYER	6
7	RECEPTACLES	20 A	1	--	360	1040					--	--	--	--	8
9	RECEPTACLES	20 A	1	--			180	300			--	1	20 A	PANEL LCP5A	10
11	RECEPTACLES	20 A	1	--					180	385	--	1	20 A	UH 5-1	12
13	RECEPTACLES	20 A	1	--	720	1590					--	1	20 A	OVERHEAD SECT. DOOR	14
15	RECEPTACLES	20 A	1	--			720	100			--	1	20 A	AUT. DRAIN VALVES	16
17	RECEPTACLES	20 A	1	--					540	800	--	1	20 A	FIRE BELL	18
19	F.A.C.P	20 A	1	--	0	800					--	1	20 A	F/A PNL	20
21	Spare	20 A	1	--			0	800			--	1	20 A	MTC	22
23	L.N.G. PANEL	20 A	1	--					0	670	--	1	20 A	EF 5-30 (1/4)	24
25	L.N.G. U.P.S	20 A	1	--	0	**180**					**--**	1	20 A	**EF 5-32 (1/10)**	26 (1)
27	Space	--	1	--			--	0			--	1	20 A	Spare	28
29	Space	--	1	--					--	0	--	1	20 A	Spare	30
31	Space	--	1	--	--	--					--	1	--	Space	32
33	Space	--	1	--			--	--			--	1	--	Space	34
35	Space	--	1	--					--	--	--	1	--	Space	36
37	Space	--	1	--	--	--					--	1	--	Space	38
39	Space	--	1	--			--	--			--	1	--	Space	40
41	Space	--	1	--					--	--	--	1	--	Space	42
				Total Load:	**6.27 kVA**		**3.68 kVA**		**4.16 kVA**						
				Total Amps:	**53 A**		**31 A**		**35 A**						

Load Classification	Connected Load	Demand Factor	Estimated Demand	Panel Totals	
Spare	14105 VA	100.00%	14105 VA		
				Total Conn. Load:	**14105 VA**
				Total Est. Demand:	**14105 VA**
				Total Conn.:	**39 A**
				Total Est. Demand:	**39 A**
				Existing Total Conn. Load:	**14165 VA**
				Existing Total Conn:	**39 A**

CB Legend (blank = circuit breaker):
G = GFCI S = Shunt Trip D = Switching Duty A = AFCI H = HID Rated C = HACR Rated † = Existing Circuit ‡ = Revised Circuit
Notes:

Stantec Panel

Name: **5LJ** Volts: 208Y/120V Mains Type: MCB Type:
Location: BUILDING MAINTENANCE 150 Phases: 3 Mains Rating: 225 A AIC Rating: 10K
Supply From: 5HG Wires: 4 MCB Rating: 150 A Mounting: Surface
Serves: Lugs: Single Lugs Enclosure: Type 1
Notes:

CKT	Circuit Description	Trip	Poles	CB	A		B		C		CB	Poles	Trip	Circuit Description	CKT
1	BM-1 WORKBENCH W/VISE	20 A	1	--	180	180					--	1	20 A	M-1 WORKBENCH W/VISE	2
3	BM-1 WORKBENCH W/VISE	20 A	1	--			180	180			--	1	20 A	M-1 WORKBENCH W/VISE	4
5	BM-1 WORKBENCH W/VISE	20 A	1	--					180	1000	--	1	20 A	M-6 BUFFER/GRINDER	6
7	BM-1 WORKBENCH W/VISE	20 A	1	--	180	1150					--	2	20 A	M-7 HORIZONTAL BAND SAW	8
9	BM-2 DRILL PRESS	20 A	1	--			1600	1150			--	--	--	--	10
11	BM-3 VERTICAL BAND SAW	20 A	1	--					180	1130	--	1	20 A	M-8 VERTICAL BAND SAW	12
13	BM-6 DUST COLLECTOR	40 A	1	--	1840	180					--	1	20 A	PLASMA CUTTER M-13	14
15	BM-5 BUFFER GRINDER	20 A	1	--			1000	1000			--	1	40 A	M-9 BELT DISC SANDER	16
17	BM-6 BELT/DISC SANDER	40 A	1	--					4140	720	--	1	20 A	RECEPTACLES	18
19	BM-18 COMP. MITRE SAW	40 A	1	--	1840	1080					--	1	20 A	RECEPTACLES	20
21	BM-19 PIPE THREADING	20 A	1	--			1130	1080			--	1	20 A	RECEPTACLES	22
23	REC. OFFICE #149	20 A	1	--					180	900	--	1	20 A	RECEPTACLES	24
25	RECEPTACLES	20 A	1	--	360	1590					--	1	20 A	OVERHEAD SECT. DOOR	26
27	RECEPTACLES	20 A	1	--			360	1590			--	1	20 A	OVERHEAD SECT. DOOR	28
29	RECEPTACLES	20 A	1	--					360	510	--	1	20 A	UH 5-10	30
31	RECEPTACLES	20 A	1	--	360	1840					--	1	40 A	M-25 FUME EXTRACTOR	32
33	RECEPTACLES	20 A	1	--			360	**1737**			**--**	2	**25 A**	**AC 5-1**	34 (1)
35	RECEPTACLES	20 A	1	--					180	**1737**	**--**	**--**	**--**	**--**	36
37	RECEPTACLES	20 A	1	--	540	900					--	3	20 A	M-5 DRILL PRESS	38
39	RECEPTACLES	20 A	1	--			360	900			--	--	--	--	40
41	RECEPTACLES	20 A	1	--					360	900	--	--	--	--	42
				Total Load:	**12.22 kVA**		**12.63 kVA**		**12.48 kVA**						
				Total Amps:	**102 A**		**106 A**		**104 A**						

Load Classification	Connected Load	Demand Factor	Estimated Demand	Panel Totals	
Spare	37324 VA	100.00%	37324 VA		
				Total Conn. Load:	**37324 VA**
				Total Est. Demand:	**37324 VA**
				Total Conn.:	**104 A**
				Total Est. Demand:	**104 A**
				Existing Total Conn. Load:	**36970 VA**
				Existing Total Conn:	**103 A**

CB Legend (blank = circuit breaker):
G = GFCI S = Shunt Trip D = Switching Duty A = AFCI H = HID Rated C = HACR Rated † = Existing Circuit ‡ = Revised Circuit
Notes:

5LD	5LG
5LH	5LG

REGISTERED PROFESSIONAL ENGINEER
PAUL K. ERICSON
No. 11219
exp.06/30/2025
ELECTRICAL
STATE OF CALIFORNIA

05-13-2024

Stantec
801 S. Figueroa Street, Suite 300
Los Angeles, CA 90017

Copyright Reserved
The Contractor shall verify and be responsible for all dimensions. DO NOT scale the drawing - any errors or omissions shall be reported to Stantec without delay.
The Copyrights to all designs and drawings are the property of Stantec. Reproduction or use for any purpose other than that authorized by Stantec is forbidden.

REVISION	DESCRIPTION	DATE
4	100% RESUBMITTAL	05/13/2024
3	100% CONSTRUCTION DRAWING SUBMITTAL	03/27/2024
2	90% UPDATED CONSTRUCTION SUBMITTAL	02/13/2024
1	90% CONSTRUCTION DRAWING SUBMITTAL	12/07/2023

REPLACEMENT OF MECHANICAL UNITS AT SANTA ANA BUS BASE
4301 W. MAC ARTHUR BLVD., SANTA ANA, CA

PANEL SCHEDULES

JOB #:
DESIGN BY: IZ
DRAWN BY: AD
CHECKED BY: PKE
DATE: 02/13/2024
SCALE: NTS
SHEET: **E-701M**

OCTA
ORANGE COUNTY
TRANSPORTATION AUTHORITY
550 SOUTH MAIN STREET, ORANGE, CA

IFB 4-2550 EXHIBIT B

Panel 5LK

Stantec — Panel

Name: **5LK** | Volts: 208Y/120V | Mains Type: MCB | Type:
Location: STORAGE 155 | Phases: 3 | Mains Rating: 225 A | AIC Rating: 10K
Supply From: 5HH (VIA XFMR 5TG) | Wires: 4 | MCB Rating: 150 A | Mounting: Surface
Serves: | Lugs: Single Lugs | Enclosure: Type 1

Notes:

Key Note	CKT	Circuit Description	Trip	Poles	CB	A	A	B	B	C	C	CB	Poles	Trip	Circuit Description	CKT
	1	CAMERAS 6, 7, 8 & 9	20 A	1	--	600	180					--	1	20 A	REC. MANAGER OFFICE	2
1	3	**EF 5-40**	20 A	**1**	**--**			**420**	180			--	1	20 A	REC. OFFICE	4
	5	RECEPTACLES	20 A	1	--					0	360	--	1	20 A	RECEPTACLES COUNTER	6
	7	RECEPTACLES	20 A	1	--	540	1000					--	1	20 A	REFRIGERATOR	8
	9	RECEPTACLES	20 A	1	--			540	1200			--	1	20 A	MICROWAVE	10
	11	RECEPTACLES	20 A	1	--					540	1200	--	1	20 A	MICROWAVE	12
	13	RECEPTACLES	20 A	1	--	720	1590					--	1	20 A	GARBAGE DISPOSAL	14
	15	RECEPTACLES	20 A	1	--			720	1300			--	1	20 A	HOT WATER DISPENSER	16
	17	RECEPTACLES	20 A	1	--					720	900	--	1	20 A	RECEPTACLES RESTROOMS	18
	19	RECEPTACLES	20 A	1	--	720	540					--	1	20 A	RECEPTACLES	20
	21	RECEPTACLES	20 A	1	--			720	360			--	1	20 A	RECEPTACLES	22
	23	RECEPTACLES	20 A	1	--					720	360	--	1	20 A	RECEPTACLES	24
	25	SHREDDER	25 A	3	--	1267	540					--	1	20 A	RECEPTACLES	26
	27	--	--	--	--			1267	540			--	1	20 A	RECEPTACLES	28
	29	--	--	--	--					1267	540	--	1	20 A	RECEPTACLES	30
	31	MASTER DOOR CTRL PNL	20 A	1	--	500	1130					--	1	20 A	COILING DOOR	32
	33	MASTER INTERCOM CTRL PNL	20 A	1	--			500	1130			--	1	20 A	COILING DOOR	34
	35	Spare	20 A	1	--					0	1200	--	1	20 A	DOCK LEVELER	36
	37	PANEL 5UC	30 A	2	--	720	1860					--	3	40 A	PANEL 5LS	38
	39	--	--	--	--			1080	1530			--	--	--	--	40
	41	Spare	20 A	1	--					0	1920	--	--	--	--	42
					Total Load:	**11.91 kVA**		**11.49 kVA**		**9.73 kVA**						
					Total Amps:	**101 A**		**98 A**		**81 A**						

Load Classification	Connected Load	Demand Factor	Estimated Demand	Panel Totals	
Spare	33121 VA	100.00%	33121 VA		
				Total Conn. Load:	33121 VA
				Total Est. Demand:	33121 VA
				Total Conn.:	92 A
				Total Est. Demand:	92 A
				Existing Total Conn. Load:	33651 VA
				Existing Total Conn:	93 A

CB Legend (blank = circuit breaker):
G = GFCI S = Shunt Trip D = Switching Duty A = AFCI H = HID Rated C = HACR Rated † = Existing Circuit ‡ = Revised Circuit

Notes:

Panel 5LM

Stantec — Panel

Name: **5LM** | Volts: 208Y/120V | Mains Type: MCB | Type:
Location: COMPONENT EXCHANGE 148 | Phases: 3 | Mains Rating: 225 A | AIC Rating: 10K
Supply From: 5HK (VIA TFMR 5TJ) | Wires: 4 | MCB Rating: 150 A | Mounting: Surface
Serves: | Lugs: Single Lugs | Enclosure: Type 1

Notes:

Key Note	CKT	Circuit Description	Trip	Poles	CB	A	A	B	B	C	C	CB	Poles	Trip	Circuit Description	CKT
	1	SR-1 BUFFER GRINDER	20 A	1	--	1000	0					--	1	20 A	Spare	2
	3	SR-2 SMALL PARTS CLEANER	20 A	1	--			1130	670			--	1	20 A	SR-9 JIB CRANE	4
	5	SR-7 WORKBENCH W/VISE	20 A	1	--					180	180	--	1	20 A	CE-11 WORKBENCH W/VISE	6
	7	SR-7 WORKBENCH W/VISE	20 A	1	--	180	180					--	1	20 A	CE-11 WORKBENCH W/VISE	8
	9	SR-7 WORKBENCH W/VISE	20 A	1	--			180	180			--	1	20 A	CE-14 FLUID MANAGEMENT	10
	11	SR-8 PARTS WASHER	20 A	1	--					670	0	--	1	20 A	Spare	12
	13	RECEPTACLES	20 A	1	--	540	360					--	1	20 A	RECEPTACLES	14
	15	RECEPTACLES	20 A	1	--			540	360			--	1	20 A	RECEPTACLES	16
	17	RECEPTACLES	20 A	1	--					360	360	--	1	20 A	RECEPTACLES	18
	19	RECEPTACLES	20 A	1	--	540	360					--	1	20 A	RECEPTACLES	20
	21	RECEPTACLES	20 A	1	--			540	360			--	1	20 A	RECEPTACLES	22
	23	RECEPTACLES	20 A	1	--					360	180	--	1	20 A	RECEPTACLES	24
	25	REC. NETWORK RACK	20 A	1	--	360	1200					--	1	20 A	UP-5 SEWING MACHINE STA.	26
	27	REC. NETWORK RACK	20 A	1	--			360	540			--	1	20 A	RECEPTACLES	28
	29	REC. NETWORK RACK	20 A	1	--					360	360	--	1	20 A	RECEPTACLES	30
1	31	**RTU 5-4**	40 A	2	**--**	**2965**	1590					--	1	20 A	OVERHEAD SECT. DOOR	32
	33	--	**--**	**--**	**--**			**2965**	0			--	1	20 A	Spare	34
1	35	**RTU 5-5**	40 A	2	**--**					**2965**	670	--	1	20 A	COILING DOOR	36
	37	--	**--**	**--**	**--**	**2965**	1130					--	1	20 A	COILING DOOR	38
	39	EF 5-23 (1/4)	20 A	1	--			670	300			--	1	20 A	FA REMOTE PWR SUPPLY	40
	41	ROOF RECEPTACLES	20 A	1	--					720	510	--	1	20 A	Spare	42
					Total Load:	**13.37 kVA**		**8.80 kVA**		**7.88 kVA**						
					Total Amps:	**113 A**		**74 A**		**66 A**						

Load Classification	Connected Load	Demand Factor	Estimated Demand	Panel Totals	
Spare	30040 VA	100.00%	30040 VA		
				Total Conn. Load:	30040 VA
				Total Est. Demand:	30040 VA
				Total Conn.:	83 A
				Total Est. Demand:	83 A
				Existing Total Conn. Load:	25680 VA
				Existing Total Conn:	71 A

CB Legend (blank = circuit breaker):
G = GFCI S = Shunt Trip D = Switching Duty A = AFCI H = HID Rated C = HACR Rated † = Existing Circuit ‡ = Revised Circuit

Notes:

KEY NOTES:

1 EXISTING EQUIPMENT TO BE REPLACED.

Panel 5LN

Stantec — Panel

Name: **5LN** | Volts: 208Y/120V | Mains Type: MCB | Type:
Location: CLEAN SHOP 141 | Phases: 3 | Mains Rating: 225 A | AIC Rating: 10K
Supply From: 5HL (VIA XFMR 5TK) | Wires: 4 | MCB Rating: 100 A | Mounting: Surface
Serves: | Lugs: Single Lugs | Enclosure: Type 1

Notes:

CKT	Circuit Description	Trip	Poles	CB	A	A	B	B	C	C	CB	Poles	Trip	Circuit Description	CKT	Key Note
1	RECEPTACLES	20 A	1	--	900	300					--	1	20 A	BR-1 BRAKE LATHE (CNC)	2	
3	RECEPTACLES	20 A	1	--			900	300			--	1	20 A	BR-2 BRAKE LATHE (STAR)	4	
5	RECEPTACLES	20 A	1	--					900	300	--	1	20 A	BR-2 BRAKE LATHE (STAR)	6	
7	BR-4 WORKBENCH	20 A	1	--	180	300					--	1	20 A	BR-2 BRAKE LATHE (STAR)	8	
9	BR-4 WORKBENCH	20 A	1	--			180	**420**			**--**	1	20 A	**EF 5-38 (1/4)**	10	1
11	BR-17 JIB CRANE	20 A	1	--					670	510	--	1	20 A	BR-9 DUST COLLECTOR	12	
13	BR-17 JIB CRANE	20 A	1	--	670	1130					--	1	20 A	BR-11 ADJ WORK TABLE	14	
15	BR-8	20 A	1	--			0	1130			--	1	20 A	BR-14 TOOL BIT GRINDER	16	
17	Spare	20 A	1	--					0	1840	--	1	40 A	BR-15 PALLET WRAPPER	18	
19	PC-12 JIB CRANE	20 A	3	--	1800	180					--	1	20 A	BR-16 ELECTRIC LIFT TRUCK	20	
21	--	--	--	--			0	300			--	1	20 A	BR-2 BRAKE LATHE (STAR)	22	
23	--	--	--	--					0	0	--	1	20 A	Spare	24	
25	Space	--	1	--	--	830					--	1	20 A	PC-2 ABRASIVE PARTS WASH	26	
27	Space	--	1	--			--	830			--	1	20 A	PC-2 ABRASIVE PARTS WASH	28	
29	Space	--	1	--					--	0	--	1	20 A	Spare	30	
31	Space	--	1	--	--	1130					--	1	20 A	COILING DOOR	32	
33	Space	--	1	--			--	510			--	1	20 A	UH 5-6	34	
35	Space	--	1	--					--	510	--	1	20 A	UH 5-7	36	
37	Space	--	1	--	--	--					--	1	--	Space	38	
39	Space	--	1	--			--	--			--	1	--	Space	40	
41	Space	--	1	--					--	--	--	1	--	Space	42	
				Total Load:	**7.42 kVA**		**4.57 kVA**		**4.73 kVA**							
				Total Amps:	**62 A**		**38 A**		**40 A**							

Load Classification	Connected Load	Demand Factor	Estimated Demand	Panel Totals	
Spare	16720 VA	100.00%	16720 VA		
				Total Conn. Load:	16720 VA
				Total Est. Demand:	16720 VA
				Total Conn.:	46 A
				Total Est. Demand:	46 A
				Existing Total Conn. Load:	16970 VA
				Existing Total Conn:	47 A

CB Legend (blank = circuit breaker):
G = GFCI S = Shunt Trip D = Switching Duty A = AFCI H = HID Rated C = HACR Rated † = Existing Circuit ‡ = Revised Circuit

Notes:

Panel 5LP

Stantec — Panel

Name: **5LP** | Volts: 208Y/120V | Mains Type: MLO | Type:
Location: ELECTRICAL RM 202 | Phases: 3 | Mains Rating: 225 A | AIC Rating: 10K
Supply From: DB5B | Wires: 4 | Max Rating: 225 A | Mounting: Surface
Serves: | Lugs: Single Lugs | Enclosure: Type 1

Notes:

CKT	Circuit Description	Trip	Poles	CB	A	A	B	B	C	C	CB	Poles	Trip	Circuit Description	CKT	Key Note
1	REC. REBUILD OFFICE	20 A	1	--	180	180					--	1	20 A	REC. MANAGER OFFICE	2	
3	REC. INTERNS OFFICE	20 A	1	--			360	180			--	1	20 A	REC. ASSIST. OFFICE	4	
5	PROJECTION SCREEN	20 A	1	--					510	1000	--	1	20 A	REFRIGERATOR	6	
7	RECEPTACLES	20 A	1	--	900	1200					--	1	20 A	MICROWAVE	8	
9	RECEPTACLES	20 A	1	--			540	180			--	1	20 A	RECEPTACLE COUNTER	10	
11	RECEPTACLES	20 A	1	--					540	1200	--	1	20 A	GARBAGE DISPOSAL	12	
13	RECEPTACLES	20 A	1	--	720	720					--	1	20 A	RECEPTACLES	14	
15	RECEPTACLES	20 A	1	--			900	720			--	1	20 A	RECEPTACLES	16	
17	RECEPTACLES	20 A	1	--					720	720	--	1	20 A	RECEPTACLES	18	
19	RECEPTACLES	20 A	1	--	720	360					--	1	20 A	RECEPTACLES	20	
21	RECEPTACLES	20 A	1	--			720	540			--	1	20 A	RECEPTACLES	22	
23	RECEPTACLES	20 A	1	--					540	360	--	1	20 A	RECEPTACLES	24	
25	ROOF RECPT.	20 A	1	--	0	900					--	1	20 A	RECEPTACLES RESTROOM	26	
27	Spare	20 A	1	--			0	500			--	1	20 A	DRINKING FOUNTAIN	28	
29	Spare	20 A	1	--					0	1300	--	1	20 A	COPIER	30	
31	PANEL 5LW	50 A	3	--	1080	**156**					**--**	1	20 A	**EF 5-11 (1/15)**	32	1
33	--	--	--	--			900	55			--	1	20 A	EF 5-12 (1/15)	34	
35	--	--	--	--					720	**420**	**--**	1	20 A	**EF 5-13 (1/4)**	36	1
37	PANEL 5U	40 A	2	--	2340	55					--	1	20 A	EF -14 (1/15)	38	
39	--	--	--	--			2160	55			--	1	20 A	EF 5-15 (1/15)	40	
41	HOT WATER DISPENSER	20 A	1	--					1300	20	--	1	20 A	BD-1 BY-PASS DAMPER	42	
				Total Load:	**9.51 kVA**		**7.81 kVA**		**9.35 kVA**							
				Total Amps:	**81 A**		**65 A**		**80 A**							

Load Classification	Connected Load	Demand Factor	Estimated Demand	Panel Totals	
Spare	26671 VA	100.00%	26671 VA		
				Total Conn. Load:	26671 VA
				Total Est. Demand:	26671 VA
				Total Conn.:	74 A
				Total Est. Demand:	74 A
				Existing Total Conn. Load:	26775 VA
				Existing Total Conn:	74 A

CB Legend (blank = circuit breaker):
G = GFCI S = Shunt Trip D = Switching Duty A = AFCI H = HID Rated C = HACR Rated † = Existing Circuit ‡ = Revised Circuit

Notes:

5LK	5LM
5LN	5LP

REGISTERED PROFESSIONAL ENGINEER
PAUL K. ERICSON
No. 11219
exp.06/30/2025
ELECTRICAL
STATE OF CALIFORNIA

05-13-2024

Stantec
801 S. Figueroa Street, Suite 300
Los Angeles, CA 90017

Copyright Reserved
The Contractor shall verify and be responsible for all dimensions. DO NOT scale the drawing - any errors or omissions shall be reported to Stantec without delay.
The Copyrights to all designs and drawings are the property of Stantec. Reproduction or use for any purpose other than that authorized by Stantec is forbidden.

REVISION	DESCRIPTION	DATE
4	100% RESUBMITTAL	05/13/2024
3	100% CONSTRUCTION DRAWING SUBMITTAL	03/27/2024
2	90% UPDATED CONSTRUCTION SUBMITTAL	02/13/2024
1	90% CONSTRUCTION DRAWING SUBMITTAL	12/07/2023

REPLACEMENT OF MECHANICAL UNITS AT SANTA ANA BUS BASE

4301 W. MAC ARTHUR BLVD., SANTA ANA, CA

PANEL SCHEDULES

JOB #:
DESIGN BY: IZ
DRAWN BY: AD
CHECKED BY: PKE
DATE: 02/13/2024
SCALE: NTS
SHEET: **E-702M**

OCTA
ORANGE COUNTY
TRANSPORTATION AUTHORITY
550 SOUTH MAIN STREET, ORANGE, CA

Autodesk Docs://2014233703_Santa_Ana_Bus/elec_SantaAnaBus_2014233703.rvt
5/8/2024 9:59:50 AM

IFB 4-2550 EXHIBIT B

Panel 5LA

Stantec — Panel

Name: **5LA**	Volts: 208Y/120V	Mains Type: MLO	Type:
Location:	Phases: 3	Mains Rating: 150 A	AIC Rating: 10K
Supply From:	Wires: 4	Max Rating: 150 A	Mounting: Surface
Serves:		Lugs: Single Lugs	Enclosure: Type 1

Notes:

CKT	Circuit Description	Trip	Poles	CB	A	A	B	B	C	C	CB	Poles	Trip	Circuit Description	CKT
1	RECEPTACLES	20 A	1	--	720	300					--	1	20 A	PANEL 'LPCSE'	2
3	RECEPTACLES	20 A	1	--			720	300			--	1	20 A	CAMERAS 1&2	4
5	PORTABLE LIGHT REC.	20 A	1	--					80	**768**	--	1	20 A	**EF 5-35**	6 ⟨1⟩
7	WS 5-1	20 A	1	--	180	0					--	1	20 A	LIFT CONTROL	8
9	Spare	20 A	1	--			0	0			--	1	20 A	Spare	10
11	Spare	20 A	1	--					0	0	--	1	20 A	Spare	12
13	Space	--	1	--	--	--					--	1	--	Space	14
15	Space	--	1	--			--	--			--	1	--	Space	16
17	Space	--	1	--					--	--	--	1	--	Space	18
19	Space	--	1	--	--	--					--	1	--	Space	20
21	Space	--	1	--			--	--			--	1	--	Space	22
23	Space	--	1	--					--	--	--	1	--	Space	24
25	Space	--	1	--	--	--					--	1	--	Space	26
27	Space	--	1	--			--	--			--	1	--	Space	28
29	Space	--	1	--					--	--	--	1	--	Space	30
31	Space	--	1	--	--	--					--	1	--	Space	32
33	Space	--	1	--			--	--			--	1	--	Space	34
35	Space	--	1	--					--	--	--	1	--	Space	36
37	Space	--	1	--	--	7135					--	3	100 A	PANEL 5LB	38
39	Space	--	1	--			--	7510			--	--	--	--	40
41	Space	--	1	--					--	5735	--	--	--	--	42
				Total Load:	**8.34 kVA**		**8.53 kVA**		**6.58 kVA**						
				Total Amps:	**72 A**		**73 A**		**55 A**						

Load Classification	Connected Load	Demand Factor	Estimated Demand	Panel Totals	
Spare	23448 VA	100.00%	23448 VA		
				Total Conn. Load:	**23448 VA**
				Total Est. Demand:	**23448 VA**
				Total Conn.:	**65 A**
				Total Est. Demand:	**65 A**

CB Legend (blank = circuit breaker):
G = GFCI S = Shunt Trip D = Switching Duty A = AFCI H = HID Rated C = HACR Rated † = Existing Circuit ‡ = Revised Circuit

Notes:

Panel 5LQ

Stantec — Panel

Name: **5LQ**	Volts: 208Y/120V	Mains Type: MLO	Type:
Location: SMALL TOOL RM 130	Phases: 3	Mains Rating: 225 A	AIC Rating: 10K
Supply From: DB5B	Wires: 4	Max Rating: 225 A	Mounting: Surface
Serves:		Lugs: Single Lugs	Enclosure: Type 1

Notes:

CKT	Circuit Description	Trip	Poles	CB	A	A	B	B	C	C	CB	Poles	Trip	Circuit Description	CKT
1	RECEPTACLES	20 A	1	--	900	1000					--	1	20 A	REFRIGERATOR	2
3	RECEPTACLES	20 A	1	--			900	1000			--	1	20 A	REFRIGERATOR	4
5	RECEPTACLES	20 A	1	--					900	360	--	1	20 A	RECEPTACLES COUNTER	6
7	RECEPTACLES	20 A	1	--	540	1590					--	1	20 A	GARBAGE DISPOSAL	8
9	RECEPTACLES	20 A	1	--			540	1300			--	1	20 A	WATER HEATER	10
11	RECEPTACLES	20 A	1	--					540	1200	--	1	20 A	MICROWAVE	12
13	RECEPTACLES	20 A	1	--	720	1200					--	1	20 A	MICROWAVE	14
15	RECEPTACLES	20 A	1	--			540	1200			--	1	20 A	MICROWAVE	16
17	RECEPTACLES	20 A	1	--					720	1200	--	1	20 A	VENDING MACHINE	18
19	RECEPTACLES	20 A	1	--	720	1200					--	1	20 A	VENDING MACHINE	20
21	RECEPTACLES	20 A	1	--			720	1200			--	1	20 A	VENDING MACHINE	22
23	RECEPTACLES	20 A	1	--					900	1200	--	1	20 A	VENDING MACHINE	24
25	REC. WARRANTY OFF.	20 A	1	--	540	1200					--	1	20 A	VENDING MACHINE	26
27	REC. PARTS (EAST)	20 A	1	--			360	500			--	1	20 A	DRINING FOUNTAIN	28
29	REC. PARTS OFFICE	20 A	1	--					180	1590	--	1	20 A	RR-20 FREON RECOVERY	30
31	REC. PARTS (SOUTH)	20 A	1	--	360	360					--	1	20 A	RECEPTACLES	32
33	UH 5-2	20 A	1	--			385	540			--	1	20 A	RECEPTACLES	34
35	UH 5-3	20 A	1	--					385	540	--	1	20 A	RECEPTACLES	36
⟨1⟩ 37	**AC 5-2**	**25 A**	2	--	**1737**	440					--	3	50 A	PANEL 5V	38
39	--	--	--	--			**1737**	1300			--	--	--	--	40
41	ROOF RECEPTACLES	20 A	1	--					720	720	--	--	--	--	42
				Total Load:	**12.51 kVA**		**12.22 kVA**		**11.16 kVA**						
				Total Amps:	**106 A**		**103 A**		**93 A**						

Load Classification	Connected Load	Demand Factor	Estimated Demand	Panel Totals	
Spare	35884 VA	100.00%	35884 VA		
				Total Conn. Load:	**35884 VA**
				Total Est. Demand:	**35884 VA**
				Total Conn.:	**100 A**
				Total Est. Demand:	**100 A**
				Existing Total Conn. Load:	**33530 VA**
				Existing Total Conn:	**99 A**

CB Legend (blank = circuit breaker):
G = GFCI S = Shunt Trip D = Switching Duty A = AFCI H = HID Rated C = HACR Rated † = Existing Circuit ‡ = Revised Circuit

Notes:

KEY NOTES:

1 EXISTING EQUIPMENT TO BE REPLACED.

Panel 5LS

Stantec — Panel

Name: **5LS**	Volts: 208Y/120V	Mains Type: MLO	Type:
Location: STORAGE 155	Phases: 3	Mains Rating: 100 A	AIC Rating: 10K
Supply From: 5LK	Wires: 4	Max Rating: 100 A	Mounting: Surface
Serves:		Lugs: Single Lugs	Enclosure: Type 1

Notes:

CKT	Circuit Description	Trip	Poles	CB	A	A	B	B	C	C	CB	Poles	Trip	Circuit Description	CKT
1	COIN COUNTER	20 A	1	--	500	**180**					--	1	20 A	**EF 5-26 (1/10)**	2 ⟨1⟩
3	COIN COUNTER	20 A	1	--			500	30			--	1	20 A	EF 5-27 (1/40)	4
5	CURRENCY STRAPPER	20 A	1	--					500	**420**	--	1	20 A	**EF 5-41 (1/4)**	6 ⟨1⟩
7	COMPUTER PRINTER	20 A	1	--	500	180					--	1	20 A	ROOF RECEPTACLE	8
9	COIN COUNTER	20 A	1	--			500	--			--	1	--	Space	10
11	COIN COUNTER	20 A	1	--					500	--	--	1	--	Space	12
13	CURRENCY STRAPPER	20 A	1	--	500	--					--	1	--	Space	14
15	COIN COUNTER	20 A	1	--			500	--			--	1	--	Space	16
17	COIN COUNTER	20 A	1	--					500	--	--	1	--	Space	18
19	Space	--	1	--	--	--					--	1	--	Space	20
21	Space	--	1	--			--	--			--	1	--	Space	22
23	Space	--	1	--					--	--	--	1	--	Space	24
25	Space	--	1	--	--	--					--	1	--	Space	26
27	Space	--	1	--			--	--			--	1	--	Space	28
29	Space	--	1	--					--	--	--	1	--	Space	30
31	Space	--	1	--	--	--					--	1	--	Space	32
33	Space	--	1	--			--	--			--	1	--	Space	34
35	Space	--	1	--					--	--	--	1	--	Space	36
37	Space	--	1	--	--	--					--	1	--	Space	38
39	Space	--	1	--			--	--			--	1	--	Space	40
41	Space	--	1	--					--	--	--	1	--	Space	42
				Total Load:	**1.86 kVA**		**1.53 kVA**		**1.92 kVA**						
				Total Amps:	**16 A**		**13 A**		**16 A**						

Load Classification	Connected Load	Demand Factor	Estimated Demand	Panel Totals	
Spare	5310 VA	100.00%	5310 VA		
				Total Conn. Load:	**5310 VA**
				Total Est. Demand:	**5310 VA**
				Total Conn.:	**15 A**
				Total Est. Demand:	**15 A**
				Existing Total Conn. Load:	**5430 VA**
				Existing Total Conn:	**15 A**

CB Legend (blank = circuit breaker):
G = GFCI S = Shunt Trip D = Switching Duty A = AFCI H = HID Rated C = HACR Rated † = Existing Circuit ‡ = Revised Circuit

Notes:

Panel 5LT

Stantec — Panel

Name: **5LT**	Volts: 240V/120V	Mains Type: MCB	Type:
Location: ELECTRICAL RM 202	Phases: 1	Mains Rating: 225 A	AIC Rating: 10K
Supply From: XFMR 5TM	Wires: 3	MCB Rating: 125 A	Mounting: Surface
Serves:		Lugs: Single Lugs	Enclosure: Type 1

Notes:

CKT	Circuit Description	Trip	Poles	CB	A	A	B	B	C	C	CB	Poles	Trip	Circuit Description	CKT
1	OVERHEAD SECT. DOOR	20 A	1	--	1590	1590					--	1	20 A	OVERHEAD SECT. DOOR	2
3	OVERHEAD SECT. DOOR	20 A	1	--			1590	1590			--	1	20 A	OVERHEAD SECT. DOOR	4
5	OVERHEAD SECT. DOOR	20 A	1	--	1590	1590					--	1	20 A	OVERHEAD SECT. DOOR	6
7	OVERHEAD SECT. DOOR	20 A	1	--			1590	1590			--	1	20 A	OVERHEAD SECT. DOOR	8
9	OVERHEAD SECT. DOOR	20 A	1	--	1590	1590					--	1	20 A	OVERHEAD SECT. DOOR	10
11	OVERHEAD SECT. DOOR	20 A	1	--			1590	0			--	1	20 A	HVAC TIME CLOCK	12
⟨1⟩ 13	**EF 5-42**	20 A	1	--	**696**	0					--	1	20 A	Spare	14
15	Space	--	1	--			--	--			--	1	--	Space	16
17	Space	--	1	--	--	--					--	1	--	Space	18
19	Space	--	1	--			--	--			--	1	--	Space	20
				Total Load:	**10.24 kVA**		**7.95 kVA**		**0.00 kVA**						
				Total Amps:	**85 A**		**66 A**		**0 A**						

Load Classification	Connected Load	Demand Factor	Estimated Demand	Panel Totals	
Spare	18186 VA	100.00%	18186 VA		
				Total Conn. Load:	**18186 VA**
				Total Est. Demand:	**18186 VA**
				Total Conn.:	**76 A**
				Total Est. Demand:	**76 A**
				Existing Total Conn. Load:	**18320 VA**
				Existing Total Conn:	**76 A**

CB Legend (blank = circuit breaker):
G = GFCI S = Shunt Trip D = Switching Duty A = AFCI H = HID Rated C = HACR Rated † = Existing Circuit ‡ = Revised Circuit

Notes:

5LA	5LQ
5LS	5LT

REGISTERED PROFESSIONAL ENGINEER
PAUL K. ERICSON
No. 11219
exp.06/30/2025
ELECTRICAL
STATE OF CALIFORNIA

05-13-2024

Stantec
801 S. Figueroa Street, Suite 300
Los Angeles, CA 90017

Copyright Reserved
The Contractor shall verify and be responsible for all dimensions. DO NOT scale the drawing - any errors or omissions shall be reported to Stantec without delay.
The Copyrights to all designs and drawings are the property of Stantec. Reproduction or use for any purpose other than that authorized by Stantec is forbidden.

REVISION	DESCRIPTION	DATE
4	100% RESUBMITTAL	05/13/2024
3	100% CONSTRUCTION DRAWING SUBMITTAL	03/27/2024
2	90% UPDATED CONSTRUCTION SUBMITTAL	02/13/2024
1	90% CONSTRUCTION DRAWING SUBMITTAL	12/07/2023

REPLACEMENT OF MECHANICAL UNITS AT SANTA ANA BUS BASE

4301 W. MAC ARTHUR BLVD., SANTA ANA, CA

PANEL SCHEDULES

JOB #:	
DESIGN BY:	IZ
DRAWN BY:	AD
CHECKED BY:	PKE
DATE:	02/13/2024
SCALE:	NTS
SHEET:	**E-703M**

OCTA
ORANGE COUNTY TRANSPORTATION AUTHORITY
550 SOUTH MAIN STREET, ORANGE, CA

Stantec — Panel

Name: **6LB** | Volts: 208Y/120V | Mains Type: MLO | Type:
Location: | Phases: 3 | Mains Rating: 225 A | AIC Rating: 10
Supply From: | Wires: 4 | Max Rating: 225 A | Mounting: Surface
Serves: | Lugs: Single Lugs | Enclosure: Type 1

Notes:

CKT	Circuit Description	Trip	Poles	CB	A		B		C		CB	Poles	Trip	Circuit Description	CKT
1	**EF 6-4 (1/15)**	20 A	1	--	**156**	**3318**					--	2	**50 A**	**RTU 6-1**	2
3	EF 6-5 (1/60)	20 A	1	--			20	**3318**			--	--	--	--	4
5	**EF 6-6 (1/10)**	20 A	1	--					**180**	**2143**	--	2	40 A	**HP 6-1**	6
7	BC-14 FLUID MANAGEMENT	20 A	1	--	500	**2143**					--	--	--	--	8
9	**EF 6-8 (1/10)**	20 A	1	--			**180**	180			--	1	20 A	FACP-6	10
11	WATER HEATER/CIRC. PUMP	20 A	1	--					600	180	--	1	20 A	CC6	12
13	DRINIKING FOUNTAIN	20 A	1	--	500	100					--	1	20 A	FUEL DISPENSER/CONT.	14
15	REC. OFFICE	20 A	1	--			360	100			--	1	20 A	FUEL DISPENSER/CONT.	16
17	RECEPTACLES DATA RACK	20 A	1	--					360	100	--	1	20 A	FUEL DISPENSER/CONT.	18
19	RECEPTACLES DATA RACK	20 A	1	--	360	100					--	1	20 A	FUEL DISPENSER/CONT.	20
21	RECEPTACLES DROP	20 A	1	--			360	100			--	1	20 A	FUEL DISPENSER/CONT.	22
23	RECEPTACLES DROP	20 A	1	--					360	1590	--	1	20 A	F-2 GASOLINE DISPENSER	24
25	RECEPTACLES	20 A	1	--	540	533					--	3	20 A	SP-1	26
27	RECEPTACLES	20 A	1	--			360	533			--	--	--	--	28
29	RECEPTACLES ROOF RTU-61	20 A	1	--					360	533	--	--	--	--	30
31	RECEPTACLES RESTROOM	20 A	1	--	360	150					--	1	20 A	AUTO DRAIN VALVES	32
33	RECEPTACLES PUMP ROOM	20 A	1	--			540	800			--	1	30 A	POWER SUPPLY CAMERAS	34
35	RECEPTACLES TELEPHONE	20 A	1	--					360	800	--	1	20 A	POWER SUPPLY CAMERAS	36
37	DRINIKING FOUNTAIN	20 A	1	--	500	**1389**					--	2	**25 A**	**AC 6-1**	38
39	LAV/UR CONTROLS	20 A	1	--			300	**1389**			--	--	--	--	40
41	PHOTOSENSOR CTRL CAB.	20 A	1	--					100	100	--	1	20 A	FSD RM 116 & 118	42
				Total Load:	**10.65 kVA**		**8.54 kVA**		**7.77 kVA**						
				Total Amps:	**90 A**		**72 A**		**65 A**						

Load Classification	Connected Load	Demand Factor	Estimated Demand	Panel Totals	
Spare	26955 VA	100.00%	26955 VA		
				Total Conn. Load:	**26955 VA**
				Total Est. Demand:	**26955 VA**
				Total Conn.:	**75 A**
				Total Est. Demand:	**75 A**
				Existing Total Conn. Load:	**21984 VA**
				Existing Total Conn:	**61 A**

CB Legend (blank = circuit breaker):
G = GFCI S = Shunt Trip D = Switching Duty A = AFCI H = HID Rated C = HACR Rated † = Existing Circuit ‡ = Revised Circuit

Notes:

Stantec — Panel

Name: **8LA** | Volts: 208Y/120V | Mains Type: MCB | Type:
Location: DETAILING/CLEANING 101 | Phases: 3 | Mains Rating: 225 A | AIC Rating: 10
Supply From: 8HA (VIA XFMR 8TA) | Wires: 4 | MCB Rating: 100 A | Mounting: Surface
Serves: | Lugs: Single Lugs | Enclosure: Type 1

Notes:

CKT	Circuit Description	Trip	Poles	CB	A		B		C		CB	Poles	Trip	Circuit Description	CKT
1	RECEPTACLES	20 A	1	--	720	900					--	3	20 A	CL-11 WASHER	2
3	RECEPTACLES	20 A	1	--			720	900			--	--	--	--	4
5	RECEPTACLES	20 A	1	--					720	900	--	--	--	--	6
7	RECEPTACLES	20 A	1	--	500	900					--	3	20 A	CL-12 DRYER	8
9	RECEPTACLES	20 A	1	--			500	900			--	--	--	--	10
11	RECEPTACLES	20 A	1	--					500	900	--	--	--	--	12
13	RECEPTACLES	20 A	1	--	500	360					--	1	20 A	RECEPTACLES DROP	14
15	CAMERAS 12 & 13	20 A	1	--			300	360			--	1	20 A	RECEPTACLES DROP	16
17	Spare	20 A	1	--					0	360	--	1	20 A	RECEPTACLES DROP	18
19	Spare	20 A	1	--	0	360					--	1	20 A	RECEPTACLES DROP	20
21	Spare	20 A	1	--			0	0			--	1	20 A	Spare	22
23	Spare	20 A	1	--					0	**348**	--	1	20 A	**EF 8-1**	24
25	Spare	20 A	1	--	0	1120					--	1	20 A	VACUUM REEL	26
27	Spare	20 A	1	--			0	1120			--	1	20 A	VACUUM REEL	28
29	Spare	20 A	1	--					0	1120	--	1	20 A	VACUUM REEL	30
31	Spare	20 A	1	--	0	1120					--	1	20 A	VACUUM REEL	32
33	Spare	20 A	1	--			0	300			--	1	20 A	Spare	34
35	Spare	20 A	1	--					0	50	--	1	20 A	WATER HEATER	36
37	Space	--	1	--	--	50					--	1	20 A	DRAIN VALVE	38
39	Space	--	1	--			--	--			--	1	--	Space	40
41	Space	--	1	--					--	--	--	1	--	Space	42
				Total Load:	**6.53 kVA**		**5.10 kVA**		**4.90 kVA**						
				Total Amps:	**55 A**		**43 A**		**41 A**						

Load Classification	Connected Load	Demand Factor	Estimated Demand	Panel Totals	
Spare	16528 VA	100.00%	16528 VA		
				Total Conn. Load:	**16528 VA**
				Total Est. Demand:	**16528 VA**
				Total Conn.:	**46 A**
				Total Est. Demand:	**46 A**
				Existing Total Conn. Load:	**16850 VA**
				Existing Total Conn:	**47 A**

CB Legend (blank = circuit breaker):
G = GFCI S = Shunt Trip D = Switching Duty A = AFCI H = HID Rated C = HACR Rated † = Existing Circuit ‡ = Revised Circuit

Notes:

KEY NOTES:

1 EXISTING EQUIPMENT TO BE REPLACED.

REGISTERED PROFESSIONAL ENGINEER
PAUL K. ERICSSON
No. 11219
exp.06/30/2025
ELECTRICAL
STATE OF CALIFORNIA

05-13-2024

6LB	7LA
8LA	---

Stantec
801 S. Figueroa Street, Suite 300
Los Angeles, CA 90017

Copyright Reserved
The contractor shall verify and be responsible for all dimensions. DO NOT scale the drawing - any errors or omissions shall be reported to Stantec without delay.
This drawing is the property of Stantec and shall not be reproduced or used for other purposes than that authorized by Stantec in writing.

REVISION	DESCRIPTION	DATE
4	100% RESUBMITTAL	05/13/2024
3	100% CONSTRUCTION DRAWING SUBMITTAL	03/27/2024
2	90% UPDATED CONSTRUCTION SUBMITTAL	02/13/2024
1	90% CONSTRUCTION DRAWING SUBMITTAL	12/07/2023

REPLACEMENT OF MECHANICAL UNITS AT SANTA ANA BUS BASE
4301 W. MAC ARTHUR BLVD., SANTA ANA, CA

PANEL SCHEDULES

JOB #:
DESIGN BY: IZ
DRAWN BY: AD
CHECKED BY: PKE
DATE: 02/13/2024
SCALE: NTS
SHEET: **E-704M**

OCTA
ORANGE COUNTY TRANSPORTATION AUTHORITY
550 SOUTH MAIN STREET, ORANGE, CA

Autodesk Docs://2014233703_Santa_Ana_Bus/elec_SantaAnaBus_2014233703.rvt
5/8/2024 9:59:52 AM

EQUIP TAG	DESCRIPTION	LOCATION	SERVICE	MOTOR POWER (OR) HP	ELECTRICAL DATA VOLTS	ø	HZ	FLA(A)	MCA(A)	MOCP(A)	DISCONNECT FRAME(A)	FUSE SIZE (A)	BY	STARTER TYPE	BY	EMERGENCY / NORMAL	CONDUIT REF #	CONDUIT	WIRE	PANEL	CIRCUIT	REMARK
ROOF TOP UNIT, 65 kAIC RATED																						
RTU 4-1	PACKAGED ROOFTOP UNIT	OPERATIONS BUILDING	OPER. BLDG	17.4 kW	480	3	60	-	41	50	60	50	DIV.26	N/A	N/A	NORMAL	19	1"	3#6 & 1#8G	DB4	4	POWER WIRING AND DISCONNECT BY EC
																						120V CIRCUIT FOR IONIZATION SYSTEM
RTU 4-2	PACKAGED ROOFTOP UNIT	OPERATIONS BUILDING	OPER. BLDG	7.1 kW	480	3	60	-	18	20	30	20	DIV.26	N/A	N/A	NORMAL	20	3/4"	3#12 & 1#12G	DB4	5	POWER WIRING AND DISCONNECT BY EC
																						120V CIRCUIT FOR IONIZATION SYSTEM
RTU 4-3	PACKAGED ROOFTOP UNIT	OPERTIONS BUILDING	OPER. BLDG	11.8 kW	480	3	60	-	29	40	60	40	DIV.26	N/A	N/A	NORMAL	21	3/4"	3#8 & 1#10G	DB4	6	POWER WIRING AND DISCONNECT BY EC
																						120V CIRCUIT FOR IONIZATION SYSTEM
RTU 4-4	PACKAGED ROOFTOP UNIT	OPERATIONS BUILDING	OPER. BLDG	10.5 kW	480	3	60	-	25	30	30	30	DIV.26	N/A	N/A	NORMAL	22	3/4"	3#10 & 1#10G	DB4	7	POWER WIRING AND DISCONNECT BY EC
																						120V CIRCUIT FOR IONIZATION SYSTEM
RTU 5-1	PACKAGED ROOFTOP UNIT	MAINTENANCE BUILDING	2ND FLR OFFICES	19.7 kW	480	3	60	-	49	60	60	50	DIV.26	N/A	N/A	NORMAL	106	1"	3#6 & 1#8G	5HP	1	POWER WIRING AND DISCONNECT BY EC
																						120V CIRCUIT FOR IONIZATION SYSTEM
RTU 5-2	PACKAGED ROOFTOP UNIT	MAINTENANCE BUILDING	BREAK ROOM	17.6 kW	480	3	60	-	41	50	60	50	DIV.26	N/A	N/A	NORMAL	107	1"	3#6 & 1#8G	5HP	2	POWER WIRING AND DISCONNECT BY EC
																						120V CIRCUIT FOR IONIZATION SYSTEM
RTU 5-3	PACKAGED ROOFTOP UNIT	MAINTENANCE BUILDING	REVENUE OFFICES	17.6 kW	480	3	60	-	41	50	60	50	DIV.26	N/A	N/A	NORMAL	108	1-1/4"	3#4 & 1#8G	5HP	3	POWER WIRING AND DISCONNECT BY EC
																						120V CIRCUIT FOR IONIZATION SYSTEM
RTU 5-4	PACKAGED AIR...	MAINTENANCE BUILDING	OFFICE	1.8 kW	208	1	60	-	20.6	30	30	30	DIV.26	N/A	N/A	NORMAL	-	3/4"	2#10 & 1#10G	5LM	31,33	POWER WIRING AND DISCONNECT BY EC
																						120V CIRCUIT FOR IONIZATION SYSTEM
RTU 5-5	PACKAGED AIR...	MAINTENANCE BUILDING	OFFICE	1.8 kW	208	1	60	-	20.6	30	30	30	DIV.26	N/A	N/A	NORMAL	-	3/4"	2#10 & 1#10G	5LM	35,37	POWER WIRING AND DISCONNECT BY EC
																						120V CIRCUIT FOR IONIZATION SYSTEM
RTU 6-1	PACKAGED AIR...	FUEL/BRAKE/TIRE REPAIR...	FUEL BLDG	4.1 kW	208	1	60	-	31.9	50	60	50	DIV.26	N/A	N/A	NORMAL	-	3/4"	2#10 & 1#10G	6LB	2,4	POWER WIRING AND DISCONNECT BY EC
																						120V CIRCUIT FOR IONIZATION SYSTEM
HEATING PUMP, 65 kAIC RATED																						
HP 5-1	HEAT PUMP	MAINTENANCE BUILDING	BLDG OFFICE		208	1	60	-	20.6	30	30	30	DIV.26	N/A	N/A	NORMAL	-	3/4"	2#10 & 1#10G	5LG	22.24	POWER WIRING AND DISCONNECT BY EC
																						120V CIRCUIT FOR IONIZATION SYSTEM
HP 6-1	HEAT PUMP	FUEL/BRAKE/TIRE REPAIR...	CONTROL		208	1	60	-	20.6	30	30	30	DIV.26	N/A	N/A	NORMAL	-	3/4"	2#10 & 1#10G	LB	6,8	POWER WIRING AND DISCONNECT BY EC
																						120V CIRCUIT FOR IONIZATION SYSTEM
AIR CONDITIONING UNIT, 65 kAIC RATED																						
AC 4-1	PACKAGED COOLING UNIT	OPERATIONS BUILDING	COMPUTER ROOM	3.4kW	208	1	60	-	16.7	25	30	25	DIV.26	N/A	N/A	NORMAL	-	3/4"	2#10 & 1#10G	4LC	30,32	POWER WIRING AND DISCONNECT BY EC
																						120V CIRCUIT FOR LIGHT AND RECEPTACLE
AC 4-2	PACKAGED COOLING UNIT	OPERATIONS BUILDING	TELECOM ROOM	3.4kW	208	1	60	-	16.7	25	30	25	DIV.26	N/A	N/A	NORMAL	-	3/4"	2#10 & 1#10G	4LC	34,36	POWER WIRING AND DISCONNECT BY EC
																						120V CIRCUIT FOR LIGHT AND RECEPTACLE
AC 5-1	PACKAGED COOLING UNIT	MAINTENANCE BUILDING	COMM ROOM	3.4kW	208	1	60	-	16.7	25	30	25	DIV.26	N/A	N/A	NORMAL	-	3/4"	2#10 & 1#10G	5LJ	34,36	POWER WIRING AND DISCONNECT BY EC
																						120V CIRCUIT FOR LIGHT AND RECEPTACLE
AC 5-2	PACKAGED COOLING UNIT	MAINTENANCE BUILDING	LAN ROOM	3.4kW	208	1	60	-	16.7	25	30	25	DIV.26	N/A	N/A	NORMAL	-	3/4"	2#10 & 1#10G	5LQ	37,39	POWER WIRING AND DISCONNECT BY EC
																						120V CIRCUIT FOR LIGHT AND RECEPTACLE
AC 6-1	PACKAGED COOLING UNIT	FUEL/BRAKE/TIRE REPAIR...	COMM	3.4kW	208	1	60	-	16.7	25	30	25	DIV.26	N/A	N/A	NORMAL	-	3/4"	2#10 & 1#10G	6LB	38,40	POWER WIRING AND DISCONNECT BY EC
																						120V CIRCUIT FOR LIGHT AND RECEPTACLE
MAKEUP AIR UNITS																						
MAU 5-1	MAKEUP AIR UNIT	MAINTENANCE BUILDING	OPER. BLDG	20	480	3	60	28.1	35	50	60	50	DIV.26	N/A	N/A	NORMAL	-	3/4"	3#10 & 1#10G	5HP	4	POWER WIRING AND DISCONNECT BY EC
MAU 5-2	MAKEUP AIR UNIT	MAINTENANCE BUILDING	OPER. BLDG	15	480	3	60	22.1	27.6	40	60	40	DIV.26	N/A	N/A	NORMAL	110	3/4"	3#10 & 1#10G	5HP	5	POWER WIRING AND DISCONNECT BY EC
MAU 5-3	MAKEUP AIR UNIT	MAINTENANCE BUILDING	OPER. BLDG	15	480	3	60	22.1	27.6	40	60	40	DIV.26	N/A	N/A	NORMAL	111	3/4"	3#10 & 1#10G	5HP	6	POWER WIRING AND DISCONNECT BY EC
MAU 5-4	MAKEUP AIR UNIT	MAINTENANCE BUILDING	OPER. BLDG	15	480	3	60	22.1	27.6	40	60	40	DIV.26	N/A	N/A	NORMAL	112	3/4"	3#10 & 1#10G	5HP	7	POWER WIRING AND DISCONNECT BY EC
MAU 5-5	MAKEUP AIR UNIT	MAINTENANCE BUILDING	2ND FLR OFFICES	15	480	3	60	22.1	27.6	40	60	40	DIV.26	N/A	N/A	NORMAL	113	3/4"	3#10 & 1#10G	5HP	8	POWER WIRING AND DISCONNECT BY EC
MAU 5-6	MAKEUP AIR UNIT	MAINTENANCE BUILDING	BREAK ROOM	15	480	3	60	22.1	27.6	40	60	40	DIV.26	N/A	N/A	NORMAL	114	1"	3#10 & 1#10G	5HP	9	POWER WIRING AND DISCONNECT BY EC
MAU 5-7	MAKEUP AIR UNIT	MAINTENANCE BUILDING	REVENUE OFFICES	7 1/2	480	3	60	12.1	15.1	20	30	20	DIV.26	N/A	N/A	NORMAL	115	3/4"	3#12 & 1#12G	5HP	10	POWER WIRING AND DISCONNECT BY EC
MAU 5-8	MAKEUP AIR UNIT	MAINTENANCE BUILDING	OFFICE	3	480	3	60	5.9	7.4	15	30	15	DIV.26	N/A	N/A	NORMAL	140	3/4"	3#12 & 1#12G	5HP	11	POWER WIRING AND DISCONNECT BY EC
MAU 5-9 (E)	MAKEUP AIR UNIT	MAINTENANCE BUILDING	PAINT BOOTH	-	480	3	60	-	-	-	-	-	DIV.26	N/A	N/A	NORMAL	-	-	-	5HJ	19	EXISTING TO REMAIN

REGISTERED PROFESSIONAL ENGINEER
PAUL K. ERIKSON
No. 11219
exp.06/30/2025
ELECTRICAL
STATE OF CALIFORNIA

05-13-2024

IFB 4-2550 EXHIBIT B

Stantec
801 S. Figueroa Street, Suite 300
Los Angeles, CA 90017

Copyright Reserved
The contractor shall verify and be responsible for all dimensions. DO NOT scale the drawing - any errors or omissions shall be reported to Stantec without delay.
This drawing is the property of Stantec and shall not be reproduced in whole or in part. Reproduction or use for any purpose other than that authorized by Stantec is prohibited.

REVISION	DESCRIPTION	DATE
4	100% RESUBMITTAL	05/13/2024
3	100% CONSTRUCTION DRAWING SUBMITTAL	03/27/2024
2	90% UPDATED CONSTRUCTION SUBMITTAL	02/13/2024
1	90% CONSTRUCTION DRAWING SUBMITTAL	12/07/2023

REPLACEMENT OF MECHANICAL UNITS AT SANTA ANA BUS BASE
4301 W. MAC ARTHUR BLVD., SANTA ANA, CA

CONDUIT SCHEDULES

JOB #:	
DESIGN BY:	IZ
DRAWN BY:	AD
CHECKED BY:	PKE
DATE:	02/13/2024
SCALE:	
SHEET:	E-800M

OCTA
ORANGE COUNTY TRANSPORTATION AUTHORITY
550 SOUTH MAIN STREET, ORANGE, CA

Autodesk Docs://2014233703_Santa_Ana_Bus/elec_SantaAnaBus_2014233703.rvt

5/8/2024 9:59:52 AM

IFB 4-2550 EXHIBIT B

EQUIP TAG	DESCRIPTION	LOCATION	SERVICE	MOTOR POWER (OR) HP	ELECTRICAL DATA VOLTS	Ø	HZ	FLA(A)	MCA(A)	MOCP(A)	DISCONNECT FRAME(A)	FUSE SIZE (A)	BY	STARTER TYPE	BY	EMERGENCY / NORMAL	CONDUIT REF #	CONDUIT	WIRE	PANEL	CIRCUIT	REMARK
EF 4-1	EXHAUST FAN	OPERATIONS BUILDING	OPER BLDG REST RM	1/4	120	1	60	2.9	4	15	-	-	DIV.26	N/A	N/A	NORMAL	-	3/4"	2#10 & 1#10G	4LC	2	MOTOR RATED SWITCH
EF 4-2	EXHAUST FAN	OPERATIONS BUILDING	OPER BLD MEN'S RM	1/4	120	1	60	3.5	4	15	-	-	DIV.26	N/A	N/A	NORMAL	-	3/4"	2#10 & 1#10G	4LC	4	MOTOR RATED SWITCH
EF 4-3	EXHAUST FAN	OPERATIONS BUILDING	OPER BLD ELEC RM 103	1/4	120	1	60	3.5	4	15	-	-	DIV.26	N/A	N/A	NORMAL	-	3/4"	2#10 & 1#10G	4LC	6	MOTOR RATED SWITCH
EF 4-4	EXHAUST FAN	OPERATIONS BUILDING	OPER BLDG LOCKER	1/10	120	1	60	1.5	2	15	-	-	DIV.26	N/A	N/A	NORMAL	-	3/4"	2#10 & 1#10G	4LC	8	MOTOR RATED SWITCH
EF 5-1	EXHAUST FAN	MAINTENANCE BUILDING	RUNNING REPAIR RM 181	25	480	3	60	34	42.5	70	100	70	DIV.26	2	DIV.23	NORMAL	141	1-1/4"	6#8 & 1#10G	MCC5A	2	POWER WIRING AND DISCONNECT BY EC
EF 5-2	EXHAUST FAN	MAINTENANCE BUILDING	RM 181	15	480	3	60	21	26.2	45	60	45	DIV.26	2	DIV.23	NORMAL	142	1"	6#10 & 1#10G	MCC5A	3	POWER WIRING AND DISCONNECT BY EC
EF 5-3	EXHAUST FAN	MAINTENANCE BUILDING	RM 178	15	480	3	60	21	26.2	45	60	45	DIV.26	2	DIV.23	NORMAL	143	1"	6#10 & 1#10G	MCC5A	4	POWER WIRING AND DISCONNECT BY EC
EF 5-4	EXHAUST FAN	MAINTENANCE BUILDING	RM 178	15	480	3	60	21	26.2	45	60	45	DIV.26	2	DIV.23	NORMAL	144	1"	6#10 & 1#10G	MCC5A	5	POWER WIRING AND DISCONNECT BY EC
EF 5-5	EXHAUST FAN	MAINTENANCE BUILDING	RM 178	15	480	3	60	21	26.2	45	60	45	DIV.26	2	DIV.23	NORMAL	145	1"	6#10 & 1#10G	MCC5A	6	POWER WIRING AND DISCONNECT BY EC
EF 5-6	EXHAUST FAN	MAINTENANCE BUILDING	STEAM CLEANER	5	480	3	60	7.6	9.5	15	30	15	DIV.26	1	DIV.23	NORMAL	146	3/4"	6#12 & 1#12G	MCC5A	7	POWER WIRING AND DISCONNECT BY EC
EF 5-7	EXHAUST FAN	MAINTENANCE BUILDING	PARTS RM 135	2	480	3	60	3.4	4.25	15	30	15	DIV.26	1	DIV.23	NORMAL	126	3/4"	3#12 & 1#12G	MCC5	26	POWER WIRING AND DISCONNECT BY EC
EF 5-8	EXHAUST FAN	MAINTENANCE BUILDING	PARTS RM 135	2	480	3	60	3.4	4.25	15	30	15	DIV.26	1	DIV.23	NORMAL	127	3/4"	3#12 & 1#12G	MCC5	27	POWER WIRING AND DISCONNECT BY EC
EF 5-9	EXHAUST FAN	MAINTENANCE BUILDING	PARTS RM 135	2	480	3	60	3.4	4.25	15	30	15	DIV.26	1	DIV.23	NORMAL	128	3/4"	3#12 & 1#12G	MCC5	28	POWER WIRING AND DISCONNECT BY EC
EF 5-10	EXHAUST FAN	MAINTENANCE BUILDING	PARTS RM 135	2	480	3	60	3.4	4.25	15	30	15	DIV.26	1	DIV.23	NORMAL	129	3/4"	3#12 & 1#12G	MCC5	29	POWER WIRING AND DISCONNECT BY EC
EF 5-11	EXHAUST FAN	MAINTENANCE BUILDING	JAN RM 219	1/15	120	1	60	1.3	2.00	15	-	-	DIV.26	N/A	N/A	NORMAL	-	3/4"	2#12 & 1#12G	5LP	32	MOTOR RATED SWITCH
EF 5-12 (E)	EXHAUST FAN	MAINTENANCE BUILDING	MEN'S RM 214, WOMEN 213	(E)	120	1	60	-	-	-	-	-	DIV.26	N/A	N/A	NORMAL	-	3/4"	2#12 & 1#12G	5LP	34	EXISTING TO REMAIN
EF 5-13	EXHAUST FAN	MAINTENANCE BUILDING	MEN'S RM 109	1/4	120	1	60	3.5	4	15	-	-	DIV.26	N/A	N/A	NORMAL	-	3/4"	2#12 & 1#12G	5LP	36	MOTOR RATED SWITCH
EF 5-14 (E)	EXHAUST FAN	MAINTENANCE BUILDING	WOMEN/SH RM 115	(E)	120	1	60	-	-	-	-	-	DIV.26	N/A	N/A	NORMAL	-	3/4"	2#12 & 1#12G	5LP	38	EXISTING TO REMAIN
EF 5-15 (E)	EXHAUST FAN	MAINTENANCE BUILDING	JAN RM 114	(E)	120	1	60	-	-	-	-	-	DIV.26	N/A	N/A	NORMAL	-	-	-	5LP	40	EXISTING TO REMAIN
EF 5-16	EXHAUST FAN	MAINTENANCE BUILDING	REBUILT RM 106	2	480	3	60	3.4	4.25	15	30	15	DIV.26	N/A	N/A	NORMAL	130	3/4"	3#12 & 1#12G	MCC5	30	POWER WIRING AND DISCONNECT BY EC
EF 5-17	EXHAUST FAN	MAINTENANCE BUILDING	REBUILT RM 107	2	480	3	60	3.4	4.25	15	30	15	DIV.26	1	DIV.23	NORMAL	131	3/4"	3#12 & 1#12G	MCC5	31	POWER WIRING AND DISCONNECT BY EC
EF 5-18	EXHAUST FAN	MAINTENANCE BUILDING	REBUILT RM 108	2	480	3	60	3.4	4.25	15	30	15	DIV.26	1	DIV.23	NORMAL	132	3/4"	3#12 & 1#12G	MCC5	32	POWER WIRING AND DISCONNECT BY EC
EF 5-19	EXHAUST FAN	MAINTENANCE BUILDING	BREAK RM 121	1 1/2	480	3	60	3	3.75	15	30	15	DIV.26	1	DIV.23	NORMAL	133	3/4"	3#12 & 1#12G	MCC5	33	POWER WIRING AND DISCONNECT BY EC
EF 5-20	EXHAUST FAN	MAINTENANCE BUILDING	CLEAN SHOP 141	1	480	3	60	2.1	2.63	15	30	15	DIV.26	1	DIV.23	NORMAL	134	3/4"	3#12 & 1#12G	MCC5	34	POWER WIRING AND DISCONNECT BY EC
EF 5-21	EXHAUST FAN	MAINTENANCE BUILDING	MACHINE RM 144	1	480	3	60	2.1	2.63	15	30	15	DIV.26	1	DIV.23	NORMAL	135	3/4"	3#12 & 1#12G	MCC5	35	POWER WIRING AND DISCONNECT BY EC
EF 5-22	EXHAUST FAN	MAINTENANCE BUILDING	MACHINE RM 145	1	480	3	60	2.1	2.63	15	30	15	DIV.26	1	DIV.23	NORMAL	136	3/4"	3#12 & 1#12G	MCC5	36	POWER WIRING AND DISCONNECT BY EC
EF 5-23 (E)	EXHAUST FAN	MAINTENANCE BUILDING	COMP REP RM 143	(E)	480	3	60	-	-	-	-	-	DIV.26	-	-	NORMAL	-	-	-	5LM	39	EXISTING TO REMAIN
EF 5-24	EXHAUST FAN	MAINTENANCE BUILDING	BLDG MAIN. RM 150	3/4	480	3	60	1.6	2	15	30	15	DIV.26	1	DIV.23	NORMAL	137	3/4"	3#12 & 1#12G	MCC5	37	POWER WIRING AND DISCONNECT BY EC
EF 5-25	EXHAUST FAN	MAINTENANCE BUILDING	COMP EXCH RM 148	7 1/2	480	3	60	11	13.8	20	30	20	DIV.26	1	DIV.23	NORMAL	147	3/4"	6#12 & 1#12G	MCC5A	8	POWER WIRING AND DISCONNECT BY EC
EF 5-26	EXHAUST FAN	MAINTENANCE BUILDING	REV. TOIL. RM 160/161	1/10	120	1	60	1.5	2	15	-	-	DIV.26	N/A	N/A	NORMAL	-	3/4"	2#12 & 1#12G	5LS	2	MOTOR RATED SWITCH
EF 5-27 (E)	EXHAUST FAN	MAINTENANCE BUILDING	LOCKER RM 167	(E)	120	1	60	-	-	-	-	-	DIV.26	-	-	NORMAL	-	-	-	5LS	4	EXISTING TO REMAIN
EF 5-28	EXHAUST FAN	MAINTENANCE BUILDING	BODY SHOP RM 174	20	480	3	60	27	33.8	60	60	50	DIV.26	2	DIV.23	NORMAL	148	1"	6#10 & 1#10G	MCC5A	9	POWER WIRING AND DISCONNECT BY EC
EF 5-29	EXHAUST FAN	MAINTENANCE BUILDING	STORAGE RM 155	3/4	480	3	60	1.6	2	15	30	15	DIV.26	1	DIV.23	NORMAL	138	3/4"	3#12 & 1#12G	MCC5	38	POWER WIRING AND DISCONNECT BY EC
EF 5-30 (E)	EXHAUST FAN	MAINTENANCE BUILDING	TEL RM 136	(E)	120	1	60	-	-	-	-	-	DIV.26	-	-	NORMAL	-	-	-	5LH	24	EXISTING TO REMAIN
EF 5-31	EXHAUST FAN	MAINTENANCE BUILDING	ELEC RM 137	2	480	3	60	3.2	4	15	30	15	DIV.26	N/A	N/A	NORMAL	-	3/4"	3#12 & 1#12G	5HE	20	POWER WIRING AND DISCONNECT BY EC
EF 5-32	EXHAUST FAN	MAINTENANCE BUILDING	LUBE RM 138	1/10	120	1	60	1.5	2	15	-	-	DIV.26	N/A	N/A	NORMAL	-	3/4"	2#10 & 1#10G	5LH	24	MOTOR RATED SWITCH
EF 5-33	EXHAUST FAN	MAINTENANCE BUILDING	C.A. RM 139	3	480	3	60	4.8	6	15	30	15	DIV.26	N/A	N/A	NORMAL	-	3/4"	3#12 & 1#12G	5HE	20	POWER WIRING AND DISCONNECT BY EC
EF 5-34	EXHAUST FAN	MAINTENANCE BUILDING	ELEC RM 185	2	480	3	60	3.2	4	15	30	15	DIV.26	N/A	N/A	NORMAL	-	3/4"	3#12 & 1#12G	5HA	28	POWER WIRING AND DISCONNECT BY EC
EF 5-35	EXHAUST FAN	MAINTENANCE BUILDING	ELEC RM 184	1/2	120	1	60	6.4	8	15	-	-	DIV.26	N/A	N/A	NORMAL	128	3/4"	3#12 & 1#12G	5LA	6	MOTOR RATED SWITCH
EF 5-36 (E)	EXHAUST FAN	MAINTENANCE BUILDING	ELEC RM 220	(E)	480	3	60	-	-	-	-	-	DIV.26	-	-	NORMAL	-	-	-	MCC5	10	EXISTING TO REMAIN
EF 5-37	EXHAUST FAN	MAINTENANCE BUILDING	ENG. DYN. RM 103	7 1/2	480	3	60	11	13.8	20	30	20	DIV.26	1	DIV.23	NORMAL	-	3/4"	3#12 & 1#12G	MCC5A	11	POWER WIRING AND DISCONNECT BY EC
EF 5-38	EXHAUST FAN	MAINTENANCE BUILDING	TRAN DYN. RM 105	1/4	120	1	60	3.5	4	15	-	-	DIV.26	N/A	N/A	NORMAL	-	3/4"	2#12 & 1#12G	5LN	10	MOTOR RATED SWITCH
EF 5-39	EXHAUST FAN	MAINTENANCE BUILDING	EQUIP. STOR. RM 129	1/6	120	1	60	2.3	3	15	-	-	DIV.26	N/A	N/A	NORMAL	-	3/4"	2#12 & 1#12G	5LD	6	MOTOR RATED SWITCH
EF 5-40	EXHAUST FAN	MAINTENANCE BUILDING	LOADING ABY RM 170	1/4	120	1	60	3.5	4	15	-	-	DIV.26	N/A	N/A	NORMAL	-	3/4"	2#12 & 1#12G	5LK	3	MOTOR RATED SWITCH
EF 5-41	EXHAUST FAN	MAINTENANCE BUILDING	UPHOLSTERY SHOP RM...	1/4	120	1	60	3.5	4	15	-	-	DIV.26	N/A	N/A	NORMAL	-	3/4"	2#12 & 1#12G	5LS	6	MOTOR RATED SWITCH
EF 5-42	EXHAUST FAN	MAINTENANCE BUILDING	FUEL RM 102	1/4	120	1	60		7.25	15	-	-	DIV.26	N/A	N/A	NORMAL	-	3/4"	2#12 & 1#12G	5LT	13	MOTOR RATED SWITCH
EF 5-43 (E)	EXHAUST FAN	MAINTENANCE BUILDING	PAINT BOOTH	(E)	-	-	-	-	-	-	-	-	DIV.26	-	-	NORMAL	-	-	-	5HJ	19	EXISTING TO REMAIN
EF 6-1	EXHAUST FAN	FUEL/BRAKE/TIRE REPAIR...	BRAKE/BST RM 114/001	20	480	3	60	27	33.8	50	60	50	DIV.26	2	DIV.23	NORMAL	171	1"	6#10 & 1#10G	MCC6	2	POWER WIRING AND DISCONNECT BY EC
EF 6-2	EXHAUST FAN	FUEL/BRAKE/TIRE REPAIR...	FUEL AREA RM 115	15	480	3	60	21	26.2	40	60	40	DIV.26	2	DIV.23	NORMAL	172	1"	6#10 & 1#10G	MCC6	3	POWER WIRING AND DISCONNECT BY EC
EF 6-3	EXHAUST FAN	FUEL/BRAKE/TIRE REPAIR...	BODY/SHOP 118/116	10	480	3	60	14	17.5	30	30	30	DIV.26	1	DIV.23	NORMAL	173	3/4"	6#12 & 1#12G	MCC6	4	POWER WIRING AND DISCONNECT BY EC
EF 6-4	EXHAUST FAN	FUEL/BRAKE/TIRE REPAIR...	MEN'S RM	1/15	120	1	60	1.3	2	15	-	-	DIV.26	N/A	N/A	NORMAL	-	3/4"	2#12 & 1#12G	6LB	1	MOTOR RATED SWITCH
EF 6-5 (E)	EXHAUST FAN	FUEL/BRAKE/TIRE REPAIR...	WOMEN'S RM	(E)	120	1	60	-	-	-	-	-	DIV.26	-	-	NORMAL	-	-	-	6LB	3	EXISTING TO REMAIN
EF 6-6	EXHAUST FAN	FUEL/BRAKE/TIRE REPAIR...	LOCKER/LAUNDRY	1/10	120	1	60	1.5	2	15	-	-	DIV.26	N/A	N/A	NORMAL	-	3/4"	2#12 & 1#12G	6LB	5	MOTOR RATED SWITCH
EF 6-7	EXHAUST FAN	FUEL/BRAKE/TIRE REPAIR...	C.A. 111/TEL. 112	3	480	3	60	4.8	6	15	30	15	DIV.26	N/A	N/A	NORMAL	-	3/4"	3#12 & 1#12G	MCC5	9	POWER WIRING AND DISCONNECT BY EC
EF 6-8	EXHAUST FAN	FUEL/BRAKE/TIRE REPAIR BUILDING	FLUID TANK 110/GREESE TANK 109	1/10	120	1	60	1.5	2	15	-	-	DIV.26	N/A	N/A	NORMAL	-	3/4"	2#12 & 1#12G	6LB	9	MOTOR RATED SWITCH
EF 6-9	EXHAUST FAN	FUEL/BRAKE/TIRE REPAIR...	FUEL RM 115	1/2	120	1	60	6.4	8	15	-	-	DIV.26	N/A	N/A	NORMAL	-	3/4"	2#12 & 1#12G	6LB	42	MOTOR RATED SWITCH
EF 7-1	EXHAUST FAN	BUS WASH/BRAKE DYNO BUILDING	BUS WASH	2	480	3	60	3.4	4.25	15	30	15	DIV.26	N/A	N/A	NORMAL	174	3/4"	3#12 & 1#12G	MCC6	5	POWER WIRING AND DISCONNECT BY EC
EF 7-2	EXHAUST FAN	BUS WASH/BRAKE DYNO BUILDING	BUS WASH	2	480	3	60	3.4	4.25	15	30	15	DIV.26	N/A	N/A	NORMAL	174	3/4"	3#12 & 1#12G	MCC6	5	POWER WIRING AND DISCONNECT BY EC
EF 8-1	EXHAUST FAN	DETAIL/CLEANING BUILDING	DETAILING/CLEANIN EQUIP. RM	1/4	120	1	60	2.9	4	15	-	-	DIV.26	N/A	N/A	NORMAL	-	3/4"	2#12 & 1#12G	8LA	24	MOTOR RATED SWITCH

Stantec
801 S. Figueroa Street, Suite 300
Los Angeles, CA 90017

Copyright Reserved
The Contractor shall verify and be responsible for all dimensions. DO NOT scale the drawing - any errors or omissions shall be reported to Stantec without delay.
The Copyrights to all designs and drawings are the property of Stantec. Reproduction or use for any purpose other than that authorized by Stantec is forbidden.

REVISION	DESCRIPTION	DATE
4	100% RESUBMITTAL	05/13/2024
3	100% CONSTRUCTION DRAWING SUBMITTAL	03/27/2024
2	90% UPDATED CONSTRUCTION SUBMITTAL	02/13/2024
1	90% CONSTRUCTION DRAWING SUBMITTAL	12/07/2023

REGISTERED PROFESSIONAL ENGINEER PAUL K. ERICSON No. 11219 exp.06/30/2025 ELECTRICAL STATE OF CALIFORNIA

05-13-2024

REPLACEMENT OF MECHANICAL UNITS AT SANTA ANA BUS BASE
4301 W. MAC ARTHUR BLVD., SANTA ANA, CA

CONDUIT SCHEDULES

JOB #:
DESIGN BY: IZ
DRAWN BY: ERL
CHECKED BY: PKE
DATE: 02/13/2024
SCALE:
SHEET: **E-801M**

OCTA
ORANGE COUNTY TRANSPORTATION AUTHORITY
550 SOUTH MAIN STREET, ORANGE, CA

Autodesk Docs://2014233703_Santa_Ana_Bus/elec_SantaAnaBus_2014233703.rvt

5/8/2024 9:59:53 AM

EQUIP TAG	DESCRIPTION	LOCATION	SERVICE	MOTOR POWER (OR) HP	ELECTRICAL DATA						DISCONNECT			STARTER		EMERGENCY / NORMAL	CONDUIT REF #	CONDUIT	WIRE	PANEL	CIRCUIT	REMARK
					VOLTS	ø	HZ	FLA(A)	MCA(A)	MOCP(A)	FRAME(A)	FUSE SIZE (A)	BY	TYPE	BY							
SF 4-1	SUPPLY FAN	OPERATIONS BUILDING	ELEC RM 103	1/4	120	1	60	5.8	7.25	20	-	-	DIV.26	1	DIV.23	NORMAL	-	3/4"	2#12 & 1#12G	4LC	38	MOTOR RATED SWITCH
SF 5-1	SUPPLY FAN	MAINTENANCE BUILDING	PARTS RM 135	3	480	3	60	4.8	6	15	30	15	DIV.26	1	DIV.23	NORMAL	116	3/4"	3#12 & 1#12G	MCC5	16	POWER WIRING AND DISCONNECT BY EC
SF 5-2	SUPPLY FAN	MAINTENANCE BUILDING	PARTS RM 135	3	480	3	60	4.8	6	15	30	15	DIV.26	1	DIV.23	NORMAL	117	3/4"	3#12 & 1#12G	MCC5	17	POWER WIRING AND DISCONNECT BY EC
SF 5-3	SUPPLY FAN	MAINTENANCE BUILDING	PARTS RM 135	3	480	3	60	4.8	6	15	30	15	DIV.26	1	DIV.23	NORMAL	118	3/4"	3#12 & 1#12G	MCC5	18	POWER WIRING AND DISCONNECT BY EC
SF 5-4	SUPPLY FAN	MAINTENANCE BUILDING	REBUILT RM 106	5	480	3	60	7.6	9.5	15	30	15	DIV.26	1	DIV.23	NORMAL	119	3/4"	3#12 & 1#12G	MCC5	19	POWER WIRING AND DISCONNECT BY EC
SF 5-5	SUPPLY FAN	MAINTENANCE BUILDING	BRAKE RM 121	1.5	480	3	60	3	3.75	15	30	15	DIV.26	1	DIV.23	NORMAL	120	3/4"	3#12 & 1#12G	MCC5	20	POWER WIRING AND DISCONNECT BY EC
SF 5-6	SUPPLY FAN	MAINTENANCE BUILDING	CLEAN SHOP RM 141	1	480	3	60	2.1	2.63	15	30	15	DIV.26	1	DIV.23	NORMAL	121	3/4"	3#12 & 1#12G	MCC5	21	POWER WIRING AND DISCONNECT BY EC
SF 5-7 (E)	SUPPLY FAN	MAINTENANCE BUILDING	MECH SHOP RM 144	(E)	480	3	60	-	-	-	-	-	DIV.26	-	-	NORMAL	122	3/4"	3#12 & 1#12G	MCC5	22	EXISTING TO REMAIN
SF 5-8	SUPPLY FAN	MAINTENANCE BUILDING	COMP. SHOP.RM143	3/4	480	3	60	1.6	2	15	30	15	DIV.26	1	DIV.23	NORMAL	123	3/4"	3#12 & 1#12G	MCC5	23	POWER WIRING AND DISCONNECT BY EC
SF 5-9	SUPPLY FAN	MAINTENANCE BUILDING	BLD MAINT.RM 150	2	480	3	60	3.4	4.25	15	30	15	DIV.26	1	DIV.23	NORMAL	124	3/4"	3#12 & 1#12G	MCC5	24	POWER WIRING AND DISCONNECT BY EC
SF 5-10	SUPPLY FAN	MAINTENANCE BUILDING	STORAGE RM 155	1	480	3	60	2.1	2.63	15	30	15	DIV.26	1	DIV.23	NORMAL	125	3/4"	3#12 & 1#12G	MCC5	25	POWER WIRING AND DISCONNECT BY EC
SF 5-11 (E)	SUPPLY FAN	MAINTENANCE BUILDING	ELEC RM 137	(E)	480	3	60	-	-	-	-	-	DIV.26	-	-	NORMAL	-	-	-	5HE	20	EXISTING TO REMAIN
SF 5-12	SUPPLY FAN	MAINTENANCE BUILDING	ELEC RM 185	1/2	480	3	60	1.1	1.38	15	30	15	DIV.26	1	DIV.23	NORMAL	-	3/4"	3#12 & 1#12G	5HA	28	POWER WIRING AND DISCONNECT BY EC
SF 5-13	SUPPLY FAN	MAINTENANCE BUILDING	ELEC RM 184	1/2	480	3	60	1.1	1.38	15	30	15	DIV.26	1	DIV.23	NORMAL	-	3/4"	3#12 & 1#12G	5HA	28	POWER WIRING AND DISCONNECT BY EC
SF 5-14	SUPPLY FAN	MAINTENANCE BUILDING	ELEC RM 220	1 1/2	480	3	60	3	3.75	15	30	15	DIV.26	1	DIV.23	NORMAL	-	3/4"	3#12 & 1#12G	MCC5	11	POWER WIRING AND DISCONNECT BY EC
SF 5-15	SUPPLY FAN	MAINTENANCE BUILDING	TRAIN DYN. RM105	1/2	480	3	60	1.1	1.38	15	30	15	DIV.26	1	DIV.23	NORMAL	-	3/4"	3#12 & 1#12G	MCC5	8	POWER WIRING AND DISCONNECT BY EC
SF 5-16	SUPPLY FAN	MAINTENANCE BUILDING	LOADING ABY RM 170	1/2	480	3	60	1.1	1.38	15	30	15	DIV.26	1	DIV.23	NORMAL	-	3/4"	3#12 & 1#12G	MCC5	7	POWER WIRING AND DISCONNECT BY EC
SF 6-1	SUPPLY FAN	FUEL/BRAKE/TIRE REPAIR...	TIRE BAY RM 116	5	480	3	60	7.6	9.5	15	30	15	DIV.26	1	DIV.23	NORMAL	170	3/4"	3#12 & 1#12G	MCC6	6	POWER WIRING AND DISCONNECT BY EC
SF 6-2	SUPPLY FAN	FUEL/BRAKE/TIRE REPAIR...	BASEMENT 001	5	480	3	60	3.4	4.25	15	30	15	DIV.26	1	DIV.23	NORMAL	169	3/4"	3#12 & 1#12G	MCC6	7	POWER WIRING AND DISCONNECT BY EC

REGISTERED PROFESSIONAL ENGINEER
PAUL K. ERICSON
No. 11219
exp.06/30/2025
ELECTRICAL
STATE OF CALIFORNIA

05-13-2024

IFB 4-2550 EXHIBIT B

Stantec
801 S. Figueroa Street, Suite 300
Los Angeles, CA 90017

Copyright Reserved
The contractor shall verify and be responsible for all dimensions. DO NOT scale the drawing - any errors or omissions shall be reported to Stantec without delay.
This drawing is the property of Stantec and shall not be reproduced in whole or in part. Reproduction or use for any purpose other than that authorized by Stantec is prohibited.

REVISION	DESCRIPTION	DATE
4	100% RESUBMITTAL	05/13/2024
3	100% CONSTRUCTION DRAWING SUBMITTAL	03/27/2024
2	90% UPDATED CONSTRUCTION SUBMITTAL	02/13/2024
1	90% CONSTRUCTION DRAWING SUBMITTAL	12/07/2023

REPLACEMENT OF MECHANICAL UNITS AT SANTA ANA BUS BASE
4301 W. MAC ARTHUR BLVD., SANTA ANA, CA

CONDUIT SCHEDULES

JOB #:
DESIGN BY: IZ
DRAWN BY: AD
CHECKED BY: PKE
DATE: 02/13/2024
SCALE:
SHEET: **E-802M**

OCTA
ORANGE COUNTY TRANSPORTATION AUTHORITY
550 SOUTH MAIN STREET, ORANGE, CA

Autodesk Docs://2014233703_Santa_Ana_Bus/elec_SantaAnaBus_2014233703.rvt
5/8/2024 9:59:53 AM

ORANGE COUNTY TRANSPORTATION AUTHORITY
REPLACEMENT OF MECHANICAL UNITS AT SANTA ANA BUS BASE - FUEL/ BRAKE/ TIRE REPAIR BUILDING

4301 W MacArthur Blvd, Santa Ana, CA 92704
CONTRACT NO. C-4-2550

SHEET INDEX

GENERAL
G-000F COVERSHEET
G-100F OVERALL SITE PLAN

MECHANICAL DEMO
MD-220F FUEL/BRAKE/TIRE REPAIR BUILDING MECHANICAL DEMO ROOF PLAN

ELECTRICAL DEMO
ED-230F FUEL/BRAKE/TIRE REPAIR BUILDING ELECTRICAL DEMO ROOF PLAN

STRUCTURAL
S-100F GENERAL NOTES
S-200F OVERALL PLAN
S-302F FUEL/BRAKE/TIRE REPAIR BUILDING STRUCTURAL ROOF PLAN
S-600F ANCHORAGE SCHEDULES

ARCHITECTURAL
A-100F ARCHITECTURAL SITE PLAN
A-500F DETAILS

EQUIPMENT
Q-001F INDUSTRIAL EQUIPMENT - GENERAL NOTES
Q-101F FUEL/BREAKE/TIRE REPAIR BUILDING - BELLOW VACUUM SYSTEM PLAN
Q-102F FUEL/BREAKE/TIRE REPAIR BUILDING - BELLOW VACUUM SYSTEM ROOF PLAN
Q-600F INDUSTRIAL EQUIPMENT - DETAILS

MECHANICAL
M-001F MECHANICAL GENERAL NOTES, SYMBOLS AND ANNOTATIONS
M-002F PROJECT NOTES AND SHEET INDEX
M-003F FAN SCHEDULE
M-004F ROOFTOP AND MAKE UP AIR SCHEDULES
M-005F HEAT PUMP AND AIR CONDITIONER SCHEDULES
M-006F MECHANICAL DETAILS
M-007F MECHANICAL DETAILS
M-008F MECHANICAL CONTROLS
M-009F MECHANICAL CONTROLS
M-220F FUEL/BRAKE/TIRE REPAIR BUILDING MECHANICAL ROOF PLAN
M-300F TITLE 24 CODE COMPLIANCE
M-301F TITLE 24 CODE COMPLIANCE

ELECTRICAL
E-001F SYMBOLS, NOTES AND ANNOTATIONS
E-002F SCHEMATIC SYMBOLS AND ELECTRICAL DRAWING INDEX
E-230F FUEL-BRAKE-TIRE REPAIR BUILDING ELECTRICAL ROOF PLAN
E-500F ELECTRICAL DETAILS
E-600F ELECTRICAL SINGLE LINE DIAGRAM
E-601F ELECTRICAL SINGLE LINE DIAGRAM
E-700F PANEL SCHEDULES
E-701F PANEL SCHEDULES
E-702F PANEL SCHEDULES
E-703F PANEL SCHEDULES
E-704F PANEL SCHEDULES
E-800F CONDUIT SCHEDULES
E-801F CONDUIT SCHEDULES
E-802F CONDUIT SCHEDULES

GENERAL INFORMATION

APPLICABLE CODES:
2022 CALIFORNIA MECHANICAL CODE
2022 CALIFORNIA PLUMBING CODE
2022 NATIONAL ELECTRICAL CODE
2022 TITLE 24 REQUIREMENTS
CALGREEN STANDARDS

ABBREVIATIONS

(E)	EXISTING
AB	ANCHOR BOLT
AC	AIR CONDITIONING
ACT	ACOUSTICAL TILE
ADJ	ADJACENT/ADJUSTABLE
AFF	ABOVE FINISH FLOOR
AFG	ABOVE FINISH GRADE
AHU	AIR HANDLING UNIT
ALT	ALTERNATE NO.
ALUM	ALUMINUM
ANOD	ANODIZED
ANSI	AMERICAN NATIONAL STANDARDS INSTITUTE
APPD	APPROVED
APPROX	APPROXIMATELY
ARCH	ARCHITECT
AVG	AVERAGE
BD	BOARD
BLDG	BUILDING
BLKG	BLOCKING
BM	BEAM/BENCH MARK
BOS	BOTTOM OF STEEL
BOT	BOTTOM
BUR	BUILT UP ROOFING
CEM	CEMENT
CF	CUBIC FOOT / FEET
CF/CI	CONTRACTOR FURNISHED/CONTRACTOR INSTALLED
CF/OI	CONTRACTOR FURNISHED/OWNER INSTALLED
CIP	CAST IN PLACE
CJ	CONTROL JOINT / CONTRACTION JOINT
CL	CENTERLINE
CLG	CEILING
CLR	CLEAR
CMU	CONCRETE MASONRY UNIT
CO	CLEAN OUT
COL	COLUMN
CONC	CONCRETE
COND	CONDITION
CONST	CONSTRUCTION
CONT	CONTINUE / CONTINUATION / CONTINUOUS
COORD	COORDINATE
CPT	CARPET
CT	CERAMIC TILE
CTR	CENTER
CU FT	CUBIC FOOT / CUBIC FEET
CU YD	CUBIC YARDS
CW	COLD WATER
D	DEPTH / DEEP
DBL	DOUBLE
DEG	DEGREE
DEL	DELETE
DEMO	DEMOLITION
DIA	DIAMETER
DIAG	DIAGONAL
DIM	DIMENSION
DISP	DISPENSER
DN	DOWN
DR	DOOR / DRAIN
DTL	DETAIL
DWG	DRAWING
E	EAST
EA	EACH
EF	EXHAUST FAN
EJ	EXPANSION JOINT
EL	REFERENCE ELEVATION / EASEMENT LINE
ELEC	ELECTRIC / ELECTRICAL
ELEV	ELEVATOR / ELEVATION
EMER	EMERGENCY
ENGR	ENGINEER / ENGINEERING
EOS	EDGE OF SLAB
EPDM	ETHYLENE PROPYLENE DIENE MONOMOR
EQ	EQUAL
EQUIP	EQUIPMENT
EST	ESTIMATE
ETC	ET CETERA
EW	EACH WAY
EXP	EXPOSED / EXPAND / EXPANSION
FA	FIRE ALARM / FACE AREA / FRESH AREA
FACP	FIRE ALARM CONTROL PANEL
FD	FLOOR DRAIN
FDTN	FOUNDATION
FE	FIRE EXTINGUISHER
FEC	FIRE EXTINGUISHER CABINET
FH	FIRE HYDRANT / FIRE HOSE
FHC	FIRE HOSE CABINET
FIN	FINISH
FIXT	FIXTURE
FL	FLOW LINE / FLOOR LINE
FLR	FLOOR / FLOORING
FR	FRAME / FIRE RATED / FIRE RETARTANT
FT	FOOT / FEET / FIRE TREATED / FULLY TEMPERED

ABBREVIATIONS

FTG	FOOTING
FURN	FURNISH / FURNITURE
GA	GAGE
GAL	GALLONS
GALV	GALVANIZED
GC	GENERAL CONTRACTOR
GEN	GENERAL / GENERATOR
GL	GLASS / GROUND LEVEL
GLZ	GLAZING
GND	GROUND
GYP BD	GYPSUM BOARD
HC	HANDICAPPED ACCESSIBLE / HOLLOW CORE
HD	HEAD / HEAVY DUTY
HDW	HARDWARE
HM	HOLLOW METAL
HORIZ	HORIZONTAL
HT	HEIGHT
HVAC	HEATING VENTILATION AND AIR CONDITIONING
HW	HOT WATER
ID	INSIDE DIAMETER / INTERIOR DESIGN
IF	INSIDE FACE / INTAKE FAN
IN	INCHES
INCL	INCLUDING
INSTL	INSTALL
INSUL	INSULATE / INSULATION
INT	INTERIOR / INTERNAL
INV	INVERT
INV EL	INVERT ELEVATION
J BOX	JUNCTION BOX
JT	JOINT
LAM	LAMINATE
LAV	LAVATORY
LBS	POUNDS
LF	LINEAR FEET
LH	LEFT HAND
LTG	LIGHTING
MAINT	MAINTENANCE
MATL	MATERIAL
MAX	MAXIMUM
MECH	MECHANICAL
MED	MEDIUM
MEMB	MEMBRANE
MFG	MANUFACTURING
MFR	MANUFACTURER
MIN	MINIMUM
MISC	MISCELLANEOUS
MTL	METAL
N	NORTH
N/A	NOT APPLICABLE
NEG	NEGATIVE
NIC	NOT IN CONTRACT
NO	NUMBER
NOM	NOMINAL
NTS	NOT TO SCALE
OC	ON CENTER
OD	OUTSIDE DIAMETER / OUTSIDE DIMENSION
OF/CI	OWNER FURNISHED/CONTRACTOR INSTALLED
OF/OI	OWNER FURNISHED/OWNER INSTALLED
OH	OPPOSITE HAND / OVERHEAD / OVERHANG
OPP	OPPOSITE
ORIG	ORIGINAL
PAT	PATTERN
PCC	PRECAST CONCRETE
PERF	PERFORATED
PERM	PERMANENT
PL	PLATE / PROPERTY LINE
PLAM	PLASTIC LAMINATE
PLAS	PLASTER / PLASTIC
PLBG	PLUMBING
PLYWD	PLYWOOD
PNL	PANEL
PREFAB	PREFABRICATED
PREFIN	PREFINISHED
PRELIM	PRELIMINARY
PREP	PREPARATION
PROJ	PROJECT
PT	PAINT / PRESSURE TREATED
PVC	POLYVINYL CHLORIDE
QTY	QUANTITY
R	RADIUS / RISER
RA	RETURN AIR
RCP	REFLECTED CEILING PLAN
RD	ROOF DRAIN
REBAR	REINFORCED STEEL BAR
REF	REFERENCE / REFRIGERATOR
REINF	REINFORCED / REINFORCEMENT
REQD	REQUIRED
REV	REVISION
RH	RIGHT HAND
RM	ROOM

ABBREVIATIONS

RO	ROUGH OPENING
ROW	RIGHT OF WAY
RTU	ROOF TOP UNIT
S	SOUTH
SALV	SALVAGE
SAN	SANITARY
SCHED	SCHEDULE / SCHEDULED
SEC	SECOND
SECT	SECTION
SF	SQUARE FOOT / SQUARE FEET / SUPPLY FAN
SGL	SINGLE
SIM	SIMILAR
SM	SHEET METAL / SMALL / SURFACE MOUNTED
SPEC	SPECIFICATION(S)
SPLY	SUPPLY
SQ	SQUARE
SST	STAINLESS STEEL
STC	SOUND TRANSMISSION CLASS
STD	STANDARD
STL	STEEL
STL JST	STEEL JOIST
STOR	STORAGE
STRUCT	STRUCTURAL
SURF	SURFACE
SUSP	SUSPENDED
SYMM	SYMMETRICAL
T	TREAD
T&B	TOP AND BOTTOM
TBD	TO BE DETERMINED
TEL	TELEPHONE
TEMP	TEMPERATURE / TEMPORARY
THK	THICK / THICKNESS
THRES	THRESHOLD
THRU	THROUGH
TO	TOP OF ____
TOC	TOP OF CONCRETE / TOP OF CURB
TOJ	TOP OF JOIST
TOM	TOP OF MASONRY
TOP	TOP OF PARAPET / TOP OF PAVEMENT
TOS	TOP OF STEEL / TOP OF SLAB
TOW	TOP OF WALL
TS	TUBE STEEL
TYP	TYPICAL
UBC	UNIFORM BUILDING CODE
UC	UNDERCUT
UL	UNDERWRITER'S LABORATORIES
UNFIN	UNFINISHED
UNO	UNLESS NOTED OTHERWISE
UTIL	UTILITY
VAR	VARIES
VCT	VINYL COMPOSITION TILE
VERT	VERTICAL
VIF	VERIFY IN FIELD
W	WEST / WIDTH / WIDE
W/	WITH
W/O	WITHOUT
WC	WATER CLOSET / WALL COVERING
WD	WOOD / WOOD DOOR
WF	WIDE FLANGE
WT	WEIGHT
YD	YARD / YARDS

VICINITY MAP

GENERAL NOTES

1 DO NOT SCALE DRAWINGS.
2 ITEMS INDICATED ON THESE DRAWINGS ARE NEW, UNLESS NOTED OTHERWISE.
3 CONTRACTOR TO PROVIDE ROOFTOP SUPPORT SYSTEMS PER SPECIFICATIONS FOR ALL PIPING, CONDUITS, AND ALL OTHER ITEMS NOT OTHERWISE DIRECTLY OR INDIRECTLY ATTACHED TO THE BUILDINGS, PROVIDE SYSTEMS AS REQUIRED TO ACCOMMODATE EXISTING PIPING, CONDUITS, ETC. AND ANY NEW PIPING, CONDUITS, ETC.
4 CONTRACTOR TO PROTECT IN PLACE ALL PORTIONS OF THE BUILDINGS NOT IN SCOPE OR NOT INTENDED TO BE DEMOLISHED OR OTHERWISE PATCHED AND REPAIRED.
5 THE FOLLOWING GENERAL NOTES APPLY TO THE ENTIRE SET OF DRAWINGS AND ARE NOT SPECIFIC TO ANY ONE DISCIPLINE
6 IT IS THE CONTRACTORS RESPONSIBILITY TO REVIEW AND COORDINATE THE WORK OF ALL SUB-CONTRACTORS, TRADES AND SUPPLIERS WITH REQUIREMENTS OF THE CONTRACT BEFORE COMMENCING CONSTRUCTION, AND ASSURE THAT ALL PARTIES ARE AWARE OF ALL REQUIREMENTS, REGARDLESS OF WHERE THE REQUIREMENTS OCCUR IN THE CONTRACT DOCUMENTS, WHICH MIGHT AFFECT THE WORK OF THAT PARTY.
7 THE WORK DESCRIBED BY THE DRAWINGS OF ANY ONE DISCIPLINE MAY BE AFFECTED BY THE WORK DESCRIBED ON DRAWINGS OF ANOTHER DISCIPLINE AND MAY REQUIRE CROSS REFERENCE. PARTIAL SETS OF DRAWINGS ARE INCOMPLETE AND SHOULD NOT BE DISTRIBUTED OR UTILIZED BY THE CONTRACTOR.
8 THE DRAWINGS AND SPECIFICATIONS ESTABLISH MINIMUM REQUIREMENTS FOR THE DESIGN AND CONSTRUCTION OF THE PROJECT.
9 ARCHITECT IS NOT RESPONSIBLE FOR ACCURACY OF EXISTING CONDITIONS SHOWN IN THESE DOCUMENTS. GC SHALL CONTACT ARCHITECT IMMEDIATELY IF ANY DISCREPANCIES OCCUR IN THE FIELD.
10 THE DRAWINGS IN THIS SET ARE DIAGRAMMATIC AND ILLUSTRATE THE INTENT OF THE DESIGN.
11 THE CONTRACTOR SHALL IDENTIFY AND NOTIFY IN WRITING TO THE ARCHITECT CONFLICTS BETWEEN THE WORK OF DIFFERENT PARTIES, AND DISCREPANCIES BETWEEN THE DOCUMENTS AND THE ACTUAL CONDITIONS AT THE EARLIEST POSSIBLE DATE SO AS TO ALLOW REASONABLE AND ADEQUATE TIME FOR THE CONFLICT TO BE RESOLVED WITHOUT DELAYING THE WORK. ALL DEVIATIONS FROM THAT WHICH IS REQUIRED BY THE CONTRACT DOCUMENTS MUST BE APPROVED IN ADVANCE BY THE ARCHITECT AND OWNER PRIOR TO PROCEEDING.
12 THE GENERAL NOTES, SYMBOLS AND DEFINITIONS APPLICABLE TO EACH DISCIPLINE CAN BE FOUND AT THE FRONT OF EACH DISCIPLINE'S SET OF DRAWINGS AND IS LISTED AS PART OF THE OVERALL PROJECT INDEX OF DRAWINGS.
13 THE CONTRACTOR IS RESPONSIBLE TO COMPLY WITH ALL APPLICABLE LAWS, CODES, REGULATIONS AND ORDINANCES OF THE PLACE (CITY, COUNTY, DISTRICT, AND STATE) WHERE THE PROJECT IS LOCATED.
14 THE CONTRACTOR SHALL OBTAIN ALL REQUIRED PERMITS (IF REQUIRED) AND SIMILAR RELEASES REQUIRED FOR THE CONSTRUCTION AND OCCUPANCY OF THE PROJECT. THE CONTRACTOR SHALL FURNISH COPIES OF ALL SUCH ITEMS TO THE OWNER AND ARCHITECT WITHIN 10 DAYS OF RECEIPT OF SUCH ITEMS. IF PERMITS ARE ISSUED SUBJECT TO CERTAIN CONDITIONS OR REVISIONS TO THE WORK OR IF PERMITS ARE DELAYED FOR ANY REASON, THE CONTRACTOR SHALL IMMEDIATELY NOTIFY THE OWNER AND ARCHITECT.
15 THE CONTRACTOR SHALL BE SOLELY RESPONSIBLE FOR MEANS, METHODS AND SEQUENCES OF CONSTRUCTION.
16 THE CONTRACTOR SHALL PROMPTLY REMOVE AND PROPERLY DISPOSE OF ALL CONSTRUCTION AND DEMOLITION DEBRIS. THE CONTRACTOR SHALL OBTAIN APPROVAL OF OWNER FOR DETAILS RELATED TO ALL SITE ACCESS AND REMOVAL PLANS
17 CONTRACTOR NOT TO STORE NEW OR REMOVED MECHANICAL UNITS ON BUILDING ROOFTOPS
18 THE CONTRACTOR SHALL BECOME FAMILIAR WITH AND COMPLY WITH OWNER'S PROCEDURES FOR MAINTAINING A SECURE SITE AND BUILDING AS NOTED IN THE OCTA DIVISION 1 SPECIFICATIONS.
19 EACH INSTALLER SHALL EXAMINE THE SUBSTRATE CONDITION AND/OR SITE CONDITIONS WHICH AFFECT THE QUALITY OF EACH PRODUCT TO BE INSTALLED. IF ANY CONDITIONS EXIST WHICH WILL HAVE A DETRIMENTAL EFFECT ON THE QUALITY OF THE INSTALLATION, THE INSTALLER SHALL IMMEDIATELY ADVISE THE CONTRACTOR. INSTALLATION SHALL NOT PROCEED UNTIL THE UNSATISFACTORY CONDITIONS ARE CORRECTED. INSTALLATION OF PRODUCTS SHALL SIGNIFY ACCEPTANCE BY THE INSTALLER OF THE SUBSTRATE CONDITIONS.
20 THE CONTRACTOR SHALL MAINTAIN A CURRENT/UPDATED RECORD OF DRAWINGS ON SITE AT ALL TIMES.
21 CONTRACTOR SHALL PROVIDE TEMPORARY HVAC UNITS WHILE THE PERMANENT MECHANICAL SYSTEMS ARE BEING REPLACED.
22 GC NOT TO PLACE CRANE OVER UNDERGROUND STORAGE TANKS.
23 CONTRACTOR TO COORDINATE WITH OCTA FACILITIES MAINTENANCE, SUBMITTING A LAYDOWN PLAN WITH CRANE LOCATIONS PER THE HSE SPECIFICATION DOCUMENTS. CONTRACTOR TO SUBMIT A CRANE PLAN FOR OCTA HSE DEPARTMENT TO REVIEW AND CERTIFY.
24 PATCH AND REPAIR EXISTING BUILT UP ROOFING SYSTEM AS NEEDED PER MFR REQUIREMENTS WITH A MINIMUM OVERLAP OF 48". SEE ALSO SPEC 07 52 16.
25 CONSTRUCTION SEQUENCE: THE WORK SHALL BE PERFORMED IN TWO PHASES, THE DEMOLITION PHASE, AND THE NEW CONSTRUCTION PHASE. ALL CRANE WORK FOR THE DEMOLITION PHASE INCLUDING REMOVAL OF EXISTING HVAC UNITS SHALL BE COMPLETED ON A NORMAL WORKDAY BETWEEN 7:00AM AND 4:00PM. ALL CRANE WORK FOR THE NEW CONSTRUCTION PHASE INCUDING SETTING THE NEW HVAC SHALL BE COMPLETED ON A SUBSEQUENT NORMAL WORK DAY BETWEEN 7:00AM AND 4:00PM.
26 ALL REMOVED DEMOLISHED EQUIPMENT SHALL BE LEGALLY DISPOSED OFF THE SITE THE SAME DAY OF REMOVAL AT CONTRACTOR'S EXPENSE.
27 CONTRACTOR TO PROVIDE TEMPORARY HVAC UNITS FOR BUILDINGS WHILE THE PERMENANT HVAC FOR THAT BUILDING IS BEING WORKED ON

GRAPHIC SYMBOLS LEGEND

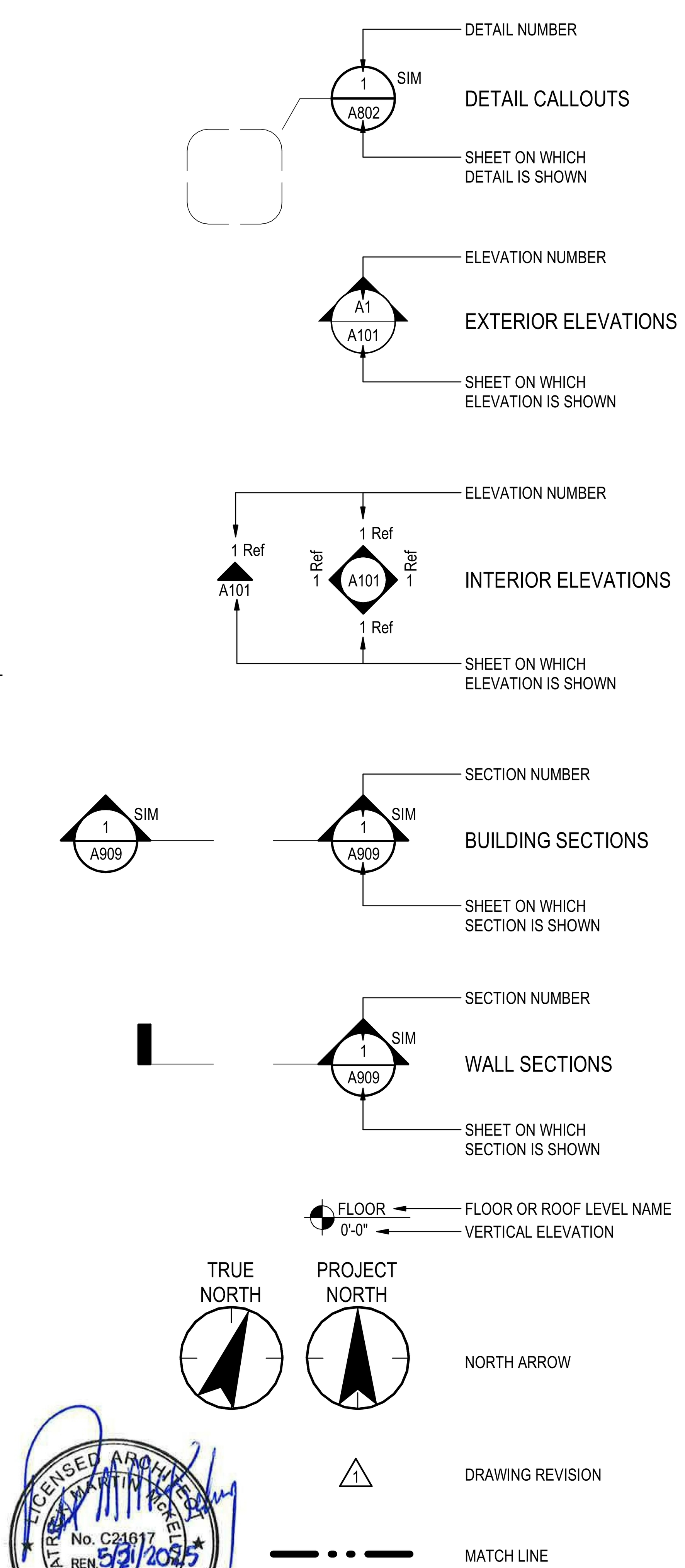

LICENSED ARCHITECT
No. C21617
REN. 5/31/2025
STATE OF CALIFORNIA

Stantec
801 S. Figueroa Street, Suite 300
Los Angeles, CA 90017

Copyright Reserved
The Contractor shall verify and be responsible for all dimensions. DO NOT scale the drawing - any errors or omissions shall be reported to Stantec without delay.
The Copyrights to all designs and drawings are the property of Stantec. Reproduction or use for any purpose other than that authorized by Stantec is forbidden.

REVISION	DESCRIPTION	DATE
5	100% RESUBMITTAL 2	08/19/2024
	100% RESUBMITTAL	5/13/2024
3	100% CONSTRUCTION DRAWING SUBMITTAL	03/18/2024
2	90% UPDATED CONSTRUCTION SUBMITTAL	02/13/2024
1	90% CONSTRUCTION DRAWING SUBMITTAL	12/07/2023

REPLACEMENT OF MECHANICAL UNITS AT SANTA ANA BUS BASE
4301 W MacArthur Blvd, Santa Ana, CA 92704

COVERSHEET

JOB #:	
DESIGN BY:	Designer
DRAWN BY:	Author
CHECKED BY:	Checker
DATE:	
SCALE:	12" = 1'-0"
SHEET:	G-000F

OCTA
ORANGE COUNTY TRANSPORTATION AUTHORITY
550 SOUTH MAIN STREET, ORANGE, CA

Autodesk Docs://2014233703_Santa_Ana_Bus/arch_2014233703-Revit22.rvt

IFB 4-2550 EXHIBIT B

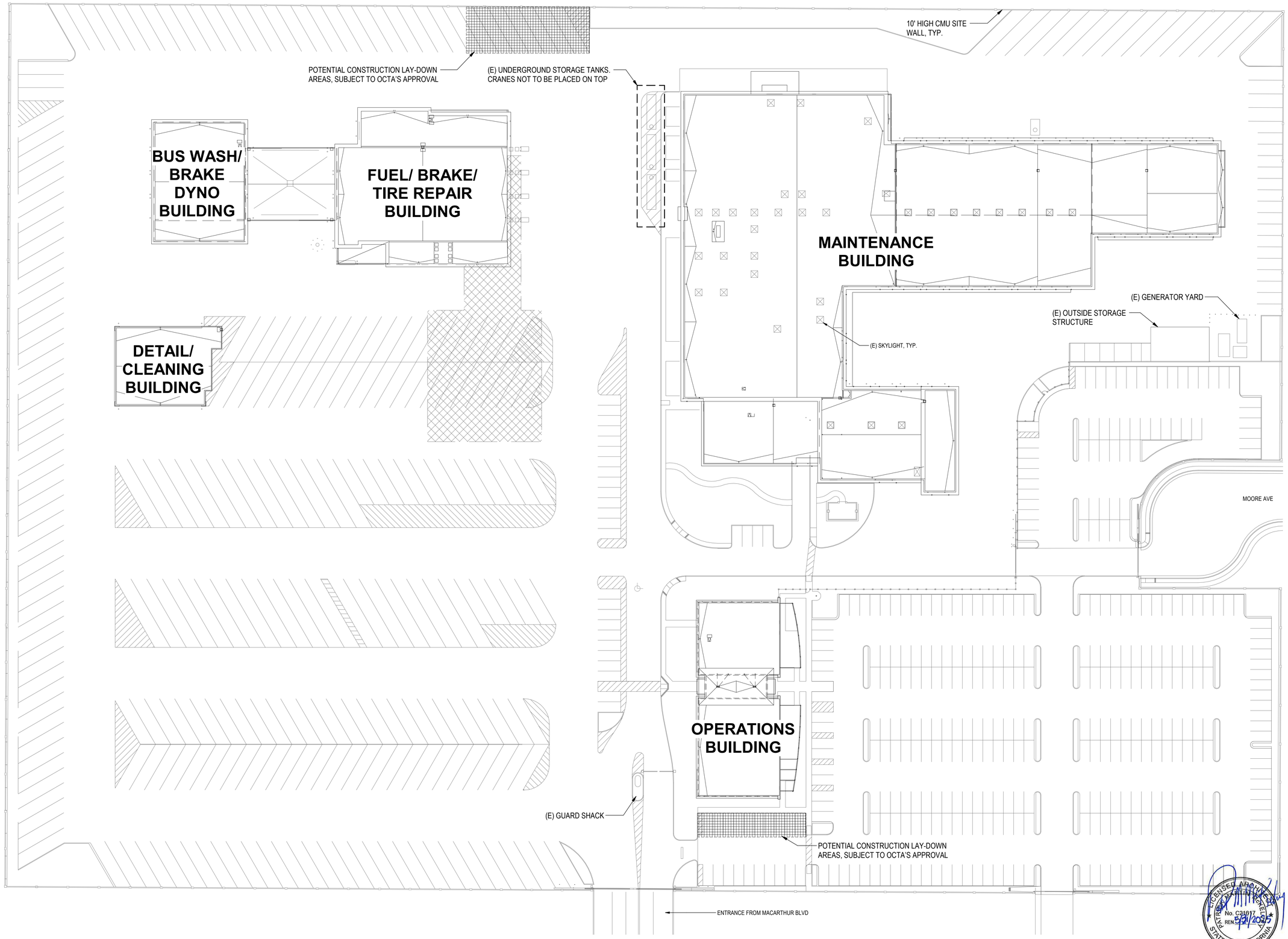

Stantec

801 S. Figueroa Street, Suite 300
Los Angeles, CA 90017

Copyright Reserved
The Contractor shall verify and be responsible for all dimensions. DO NOT scale the drawing - any errors or omissions shall be reported to Stantec without delay.
The Copyright in all designs and drawings are the property of Stantec. Reproduction or use for any purpose other than that authorized by Stantec is forbidden.

REVISION	DESCRIPTION	DATE
	100% RESUBMITTAL	5/13/2024
3	100% CONSTRUCTION DRAWING SUBMITTAL	03/18/2024
2	90% UPDATED CONSTRUCTION SUBMITTAL	02/13/2024
1	90% CONSTRUCTION DRAWING SUBMITTAL	12/07/2023

REPLACEMENT OF MECHANICAL UNITS AT SANTA ANA BUS BASE
4301 W MacArthur Blvd, Santa Ana, CA 92704

OVERALL SITE PLAN

JOB #:	
DESIGN BY:	Designer
DRAWN BY:	Author
CHECKED BY:	Checker
DATE:	
SCALE:	1" = 40'-0"
SHEET:	G-100F

OCTA
ORANGE COUNTY TRANSPORTATION AUTHORITY
550 SOUTH MAIN STREET, ORANGE, CA

LICENSED ARCHITECT
PATRICK MARTIN PACKELL
No. C21617
REN. 5/31/2025
STATE OF CALIFORNIA

Autodesk Docs://2014233703_Santa_Ana_Bus/arch_2014233703-Revit22.rvt

5/9/2024 10:14:27 AM

IFB 4-2550 EXHIBIT B

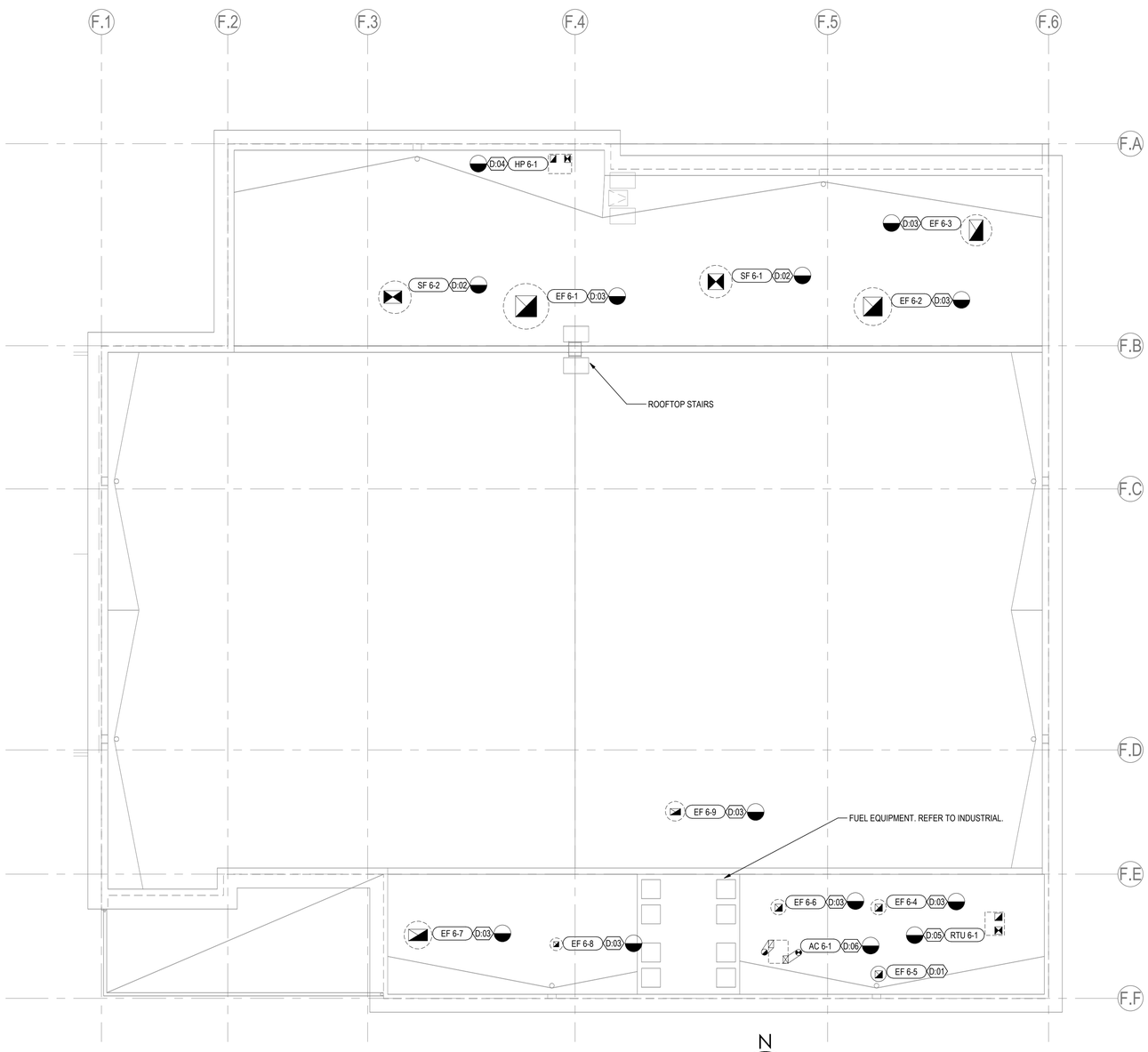

1 MD-220 **FUEL/BRAKE/TIRE REPAIR BUILDING MECHANICAL DEMO ROOF PLAN**

3/32" = 1'-0"

GENERAL NOTES

1. FOR ALL THE EXISTING EQUIPMENT NOTED TO BE RETAINED AND REUSED:
   BEFORE DEMOLITION COMMENCES ON SITE, THE CONTRACTOR SHALL SURVEY AND ESTABLISH CONDITION AND CAPACITIES. ANY DAMAGE OR DEFICIENCY TO EXISTING EQUIPMENT DISCOVERED BY THE CONTRACTOR SHALL BE RECORDED AT THIS STAGE BY THE CONTRACTOR AND A FULL WRITTEN REPORT SUBMITTED TO THE OWNERS REPRESENTATIVE FOR REVIEW. THE REPORT WILL INCLUDE PHOTOGRAPHIC EVIDENCE OF DAMAGE.
2. ALL POWER SUPPLIES TO EXISTING EQUIPMENT TO BE REMOVED SHALL BE ISOLATED AND MADE SAFE PER NEC PRIOR TO DEMOLITION STARTS.
3. THE PIPEWORK AND ASSOCIATED EQUIPMENT TO BE DEMOLISHED SHALL BE REMOVED FROM SITE.
4. ALL EQUIPMENT TO BE REUSED SHALL BE CAREFULLY REMOVED PRIOR TO DEMOLITON, AND STORED IN A PROTECTED AREA ON SITE READY FOR LATER RE-INSTALLATION. EQUIPMENT TO REMAIN IN PLACE SHALL BE WELL PROTECTED FROM DAMAGE OR DUST.,
5. NO EQUIPMENT SHALL BE STORED ON THE ROOF.
6. ANY DAMAGE TO EXISTING EQUIPMENT DURING DEMOLITION SHALL BE THE RESPONSIBILITY OF THE CONTRACTOR.
7. ALL PIPEWORK/VALVES IS TO BE REINSULATED TO COMPLY WITH THE SPECIFICATION REQUIREMENTS.
8. CONTRACTOR SHALL REMOVE CONSTRUCTION DEBRIS AND VACUUM CLEAN ALL RETAINED EQUIPMENT (INTERNAL AND EXTERNAL)- PRIOR TO TEST AND BALANCE.

DEMO WORK DEFINITION

EXISTING (E)

REMOVE EXISTING (D)

KEY NOTE

Keynote Legend

Key Value	Keynote Text
D:01	EXISTING MECHANICAL EQUIPMENT TO REMAIN.
D:02	EXISTING SUPPLY FAN TO BE DEMOLISHED.
D:03	EXISTING EXHAUST FAN TO BE DEMOLISHED.
D:04	EXISTING HEAT PUMP TO BE DEMOLISHED.
D:05	EXISTING ROOFTOP UNIT TO BE DEMOLISHED.
D:06	EXISTING AIR CONDITIONING UNIT TO BE DEMOLISHED.

Stantec

801 S. Figueroa Street, Suite 300
Los Angeles, CA 90017

Copyright Reserved
The Contractor shall verify and be responsible for all dimensions. DO NOT scale the drawing - any errors or omissions shall be reported to Stantec without delay.
The copyrights to all designs and drawings are the property of Stantec. Reproduction or use for any purpose other than that authorized by Stantec is forbidden.

REVISION	DESCRIPTION	DATE
	100% RESUBMITTAL	5/13/2024
	100% CONSTRUCTION DRAWING SUBMITTAL	3/27/2024
	90% UPDATED CONSTRUCTION SUBMITTAL	2/13/2024
	90% CONSTRUCTION DRAWING SUBMITTAL	12/07/2023

REPLACEMENT OF MECHANICAL UNITS AT SANTA ANA BUS BASE
4301 W. MAC ARTHUR BLVD., SANTA ANA, CA

FUEL/BRAKE/TIRE REPAIR BUILDING MECHANICAL DEMO ROOF PLAN

JOB #:	
DESIGN BY:	SG
DRAWN BY:	RW
CHECKED BY:	GY
DATE:	
SCALE:	As indicated
SHEET:	MD-220F

LICENSED PROFESSIONAL ENGINEER
SEVAK GALSTYAN
M-39730
EXP. 02/31/25
MECHANICAL
STATE OF CALIFORNIA

OCTA

ORANGE COUNTY TRANSPORTATION AUTHORITY
550 SOUTH MAIN STREET, ORANGE, CA

Autodesk Docs://2014233703_Santa_Ana_Bus/mech_SantaAnaBus_2014233703.rvt

5/8/2024 11:15:09 AM

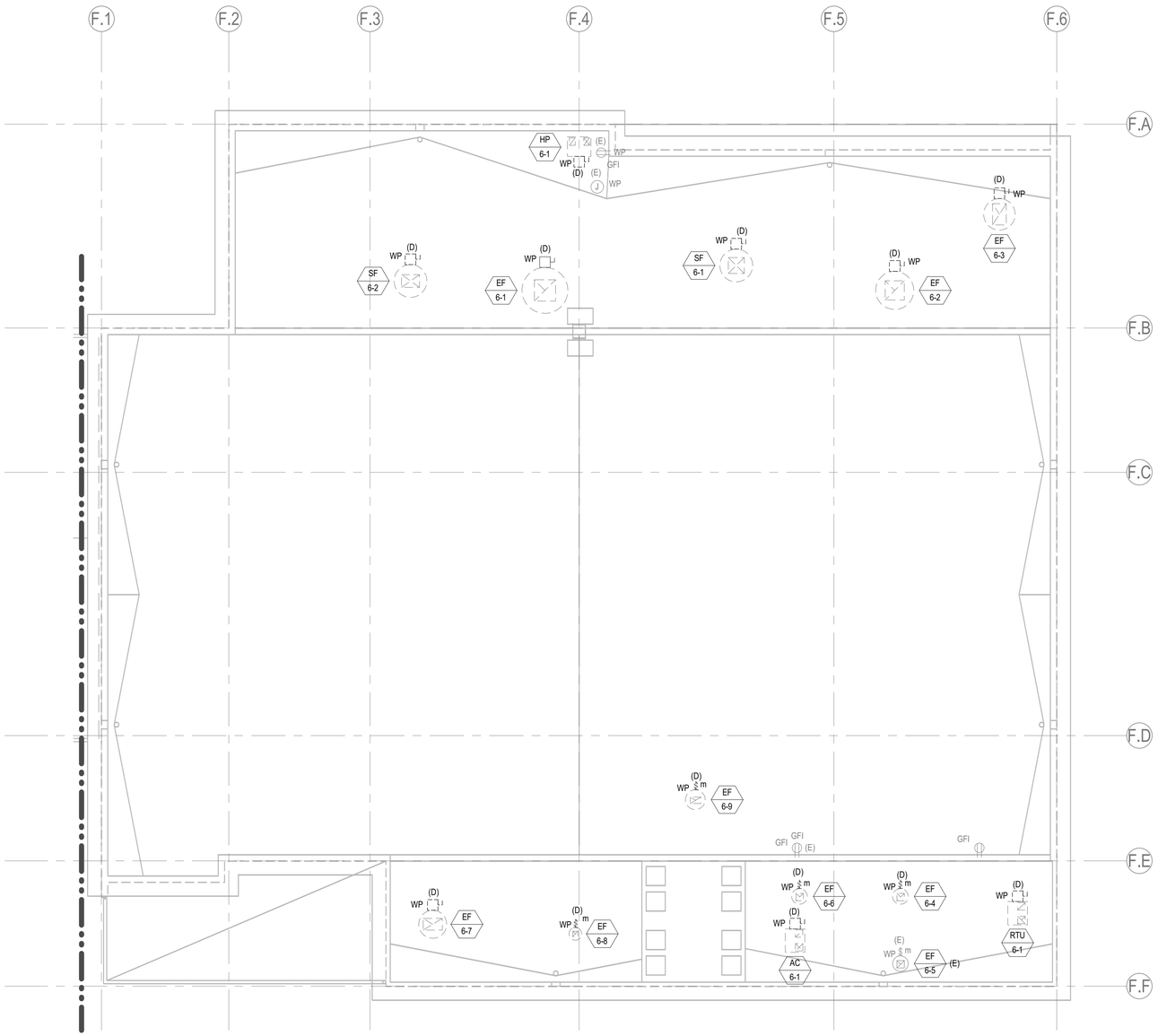

1 ED-230 **FUEL/BRAKE/TIRE REPAIR BUILDING ELECTRICAL DEMO ROOF PLAN**

3/32" = 1'-0"

N

GENERAL NOTES

1. DISCONNECT EXISTING, TO BE REPLACED, MECHANICAL UNITS POWER CONNECTION FROM EXISTING ELECTRICAL PANELS, MOTOR CONTROL CENTERS, DISTRIBUTION PANELS. REMOVE EXISTING DISCONNECT SWITCHES AND EXISTING WIRES USED FOR POWER CONNECTION TO THE EXISTING MECHANICAL UNITS, SALVAGE AND RETURN TO OWNER. PROVIDE NEW DISCONNECTS FOR THE NEW MECHANICAL UNIT POWER CONNECTION. REFER TO E-200 SERIES SHEETS FOR ADDITIONAL INFORMATION.

(E) - EXISTING TO REMAIN, PROTECT IN PLACE.
(D) - EXISTING TO BE DEMOLISHED.
$M - TOGGLE SWITCH, MOTOR RATED.
□J - NON-FUSED SAFETY SWITCH
WP - WEATHER PROOF

PROJECT DEMOLITION NOTES

1. ANY EXISTING WIRING SERVING DEVICES TO REMAIN IN SERVICE, AND WHICH IS INTERRUPTED BY WORK PERFORMED UNDER THIS CONTRACT, SHALL BE REROUTED TO MAINTAIN CIRCUIT CONTINUITY. ALL EXISTING SYSTEMS/DEVICES TO REMAIN. PRIOR TO COMMENCING WITH DEMOLITION, IDENTIFY ALL POWER, LIGHTING, COMMUNICATION, AND SIGNAL CIRCUITS PASSING THROUGH THE DEMOLITION AREA OR EXTENDING BEYOND THE DEMOLITION AREA. COORDINATE WITH DEMOLITION WORK OF OTHER TRADES.

2. THE EXISTING BUILDING MUST BE KEPT IN OPERATION AT ALL TIMES. MAINTAIN ELECTRICAL SERVICES AND SYSTEMS EXCEPT FOR EQUIPMENT BEING REPLACED BY THIS PROJECT. MAINTAIN CONTINUITY OF FIRE ALARM, LIFE SAFETY AND SECURITY SYSTEMS TO ALL OCCUPIED AREAS OF THE BUILDING THROUGHOUT THE CONSTRUCTION PERIOD. PROVIDE TEMPORARY WIRING AND BRANCH CIRCUITING AS NECESSARY TO MAINTAIN OPERATION OF EXISTING CIRCUITS AND SYSTEMS EXTENDING BEYOND REMODEL AREA. ASSUME FULL RESPONSIBILITY FOR ANY DISRUPTION TO EXISTING SERVICES. RECONNECT ANY SERVICES WHICH ARE TO REMAIN, AND WHICH HAVE BEEN DISCONNECTED DURING DEMOLITION OR CONSTRUCTION. ARRANGE WORK IN SUCH A MANNER THAT INTERRUPTIONS IN SERVICES OCCUR ONLY AT PRE-SCHEDULED TIMES. CARRY OUT THE WORK WITH A MINIMUM OF NOISE, DUST AND DISTURBANCE.

3. PERMANENTLY REMOVE ABANDONED ELECTRICAL EQUIPMENT, LIGHTING FIXTURES, ELECTRICAL DEVICES, POWER AND SIGNALLING WIRING DEVICES AND ASSOCIATED WIRE, RACEWAYS, AND/OR JUNCTION BOXES. THE REMOVAL OR RELOCATION OF EXISTING ELECTRICAL EQUIPMENT PRESENTLY CONCEALED IN EXISTING CONSTRUCTION SHALL BE COORDINATED WITH THE OWNER PRIOR TO REMOVAL OR RELOCATION. RACEWAYS AND CONDUCTORS SHALL BE REMOVED BACK TO THE SOURCE OR NEAREST REMAINING JUNCTION BOX OR DEVICE AS FAR AS PRACTICAL, OR WHERE COMPLETE REMOVAL NOT PRACTICAL, RENDERED PERMANENTLY SAFE.

4. ANY EXISTING SYSTEM OUTAGES SHALL BE OF MINIMUM DURATION AND AT A TIME ACCEPTABLE TO THE OWNER, ARRANGED A MINIMUM OF 10 WORKING DAYS IN ADVANCE. LONGER NOTICES AND/OR ADDITIONAL RESTRICTIONS PERTAINING TO OUTAGES MAY BE REQUIRED IN SOME INSTANCES, AS PER SPECIFICATIONS. VERIFY PROTOCOL WITH ALL PROJECT STAKEHOLDERS INCLUDING OWNER, TENANT, CONSTRUCTION MANAGER AND/OR USER GROUP(S) AS APPLICABLE.

5. ELECTRICAL EQUIPMENT, FIXTURES, AND/OR DEVICES SCHEDULED TO REMAIN OR TO BE RELOCATED THAT ARE DAMAGED DURING DEMOLITION SHALL BE REPLACED WITH SIMILAR TYPE AS APPROVED BY THE OWNER, AT NO ADDITIONAL CHARGE TO THE OWNER.

6. IN THE EVENT THAT DEMOLITION WORK AFFECTS THE STRUCTURAL SUPPORT OF EXISTING ELECTRICAL EQUIPMENT THAT IS TO REMAIN IN SERVICE, IT SHALL BE RE-SUPPORTED IN ACCORDANCE WITH ALL APPLICABLE CODES. PROVIDE TEMPORARY SUPPORTS WHERE REQUIRED.

7. UNUSED FLUSH MOUNTED DEVICES, OUTLET AND OTHER BOXES IN FINISHED AREAS SHALL BE REMOVED FROM WALL AND THE REMAINING HOLE PATCHED TO MATCH ADJACENT WALL SURFACES. UNUSED RACEWAYS AND SLEEVES SHALL BE CUT FLUSH AT CEILING, FLOOR OR WALL AND FILLED WITH GROUT OR REQUIRED FIRE SEALANT. UNUSED RACEWAYS ABOVE ACCESSIBLE CEILINGS SHALL BE REMOVED.

8. ELECTRICAL MATERIAL SCHEDULED FOR REMOVAL IS TO BE REMOVED FROM THE SITE AND PROPERLY DISPOSED OF AS PART OF THIS CONTRACT. ANY ELECTRICAL MATERIAL THE OWNER WISHES TO RETAIN TO BECOME THE PROPERTY OF THE OWNER AND TO BE REMOVED AND PLACED AT A LOCATION ON THE SITE AS DIRECTED BY THE OWNER.

9. THE DEMOLITION DRAWINGS SHOW THE GENERAL SCOPE OF THE DEMOLITION AND NOT EXACT DETAILS OR TOTAL EXTENT. FOR EXACT DETAILS AND TOTAL EXTENT, EACH SERVICE MUST BE CAREFULLY CHECKED ON SITE. BEFORE REMOVING SERVICES FOLLOW THE SERVICE THROUGH TO ENSURE OTHER AREAS OF THE BUILDING ARE NOT AFFECTED.

REGISTERED PROFESSIONAL ENGINEER
PAUL K. ERLOSON
No. 11219
exp.06/30/2025
ELECTRICAL
STATE OF CALIFORNIA

05-13-2024

Stantec
801 S. Figueroa Street, Suite 300
Los Angeles, CA 90017

Copyright Reserved
The contractor shall verify and be responsible for all dimensions. DO NOT scale the drawing - any errors or omissions shall be reported to Stantec without delay.
This drawing is the property of Stantec and shall not be reproduced in any manner. Reproduction or use for any purpose other than that authorized by Stantec is forbidden.

REVISION	DESCRIPTION	DATE
3	100% RESUBMITTAL	05/13/2024
2	100% CONSTRUCTION DRAWING SUBMITTAL	03/27/2024
1	90% UPDATED CONSTRUCTION SUBMITTAL	02/13/2024

REPLACEMENT OF MECHANICAL UNITS AT SANTA ANA BUS BASE
4301 W. MAC ARTHUR BLVD., SANTA ANA, CA

FUEL/BRAKE/TIRE REPAIR BUILDING ELECTRICAL DEMO ROOF PLAN

JOB #:	
DESIGN BY:	IZ
DRAWN BY:	ERL
CHECKED BY:	PKE
DATE:	02/13/2024
SCALE:	As indicated
SHEET:	ED-230F

OCTA
ORANGE COUNTY TRANSPORTATION AUTHORITY
550 SOUTH MAIN STREET, ORANGE, CA

Autodesk Docs://2014233703_Santa_Ana_Bus/elec_SantaAnaBus_2014233703.rvt
5/8/2024 9:59:55 AM

IFB 4-2550 EXHIBIT B

SPECIAL INSPECTION AND TEST REQUIREMENTS

TYPE		FREQUENCY	REQUIRED INSPECTIONS AND/OR TESTS	REFERENCES CODES/STANDARDS
NONSTRUCTURAL COMPONENTS				
1. PLUMBING, MECHANICAL, AND ELECTRICAL COMPONENTS	☑	PERIODIC	INSTALLATION OF MECHANICAL AND ELECTRICAL EQUIPMENT, INCLUDING DUCTWORK, PIPING SYSTEMS AND THEIR STRUCTURAL SUPPORTS, WHERE AUTOMATIC FIRE SPRINKLER SYSTEMS ARE INSTALLED TO VERIFY ONE OF THE FOLLOWING REQUIREMENTS (SDC C,D,E,F): • MINIMUM CLEARANCES HAVE BEEN PROVIDED AS REQUIRED BY ASCE-7 SECTION 13.2.3 • A NOMINAL CLEARANCE OF NOT LESS THAN 3 INCHES HAS BEEN PROVIDED BETWEEN FIRE PROTECTION SPRIKLER SYSTEM DROPS AND SPRIGS AND: STRUCTURAL MEMBERS NOT USED COLLECTIVELY OR INDEPENDENTLY TO SUPPORT THE SPRINKERS; EQUIPMENT ATTACHED TO THE BUILDING STRUCTURE; AND OTHER SYSTEMS' PIPING	CBC 1705.12.6
	☑	PERIODIC	DESIGNATED SEISMIC SYSTEMS - EXAMINE DESIGNATED SEISMIC SYSTEMS REQUIRING SEISMIC QUALIFICATION IN ACCORDANCE WITH ASCE 7 SECTION 13.2.2 AND VERIFY THAT THE LABEL, ANCHORAGE AND MOUNTING CONFORM TO THE CERTIFICATE OF COMPLIANCE (SDC C,D,E,F): • ACTIVE MECHANICAL AND ELECTRICAL EQUIPMENT THAT MUST REMAIN OPERABLE FOLLOWING THE DESIGN EARTHQUAKE GROUND MOTION • COMPONENTS WITH HAZARDOUS SUBSTANCES AND ASSIGNED A COMPONENT IMPORTANCE FACTOR, I_p OF 1.5.	CBC 1705.12.4

STATEMENT OF SPECIAL INSPECTIONS

INSPECTION AND TESTING REQUIREMENTS ON THIS SHEET ARE IN ACCORDANCE WITH SECTION 1705 OF THE CALIFORNIA BUILDING CODE (CBC) AND HAVE BEEN IDENTIFIED AS A STATEMENT OF SPECIAL INSPECTIONS AS REQUIRED BY CBC SECTION 1704.3. THE OWNER OF THE OWNER'S AUTHORIZED AGENT, OTHER THAN THE CONTRACTOR, SHALL EMPLOY ONE OR MORE APPROVED AGENCIES TO PROVIDE THE SPECIAL INSPECTIONS AND TESTS DURING CONSTRUCTION AS REQUIRED BY CBC SECTION 1705 AND IDENTIFY THE APPROVED AGENCIES TO THE BUILDING OFFICIAL. THESE SPECIAL INSPECTIONS AND TESTS ARE IN ADDITION TO THE INSPECTIONS BY THE BUILDING OFFICIAL THAT ARE IDENTIFIED IN CBC SECTION 110. SPECIAL INSPECTORS SHALL BE QUALIFIED IN ACCORDANCE WITH CBC SECTION 1704.2.1, AND ALL OTHER APPLICABLE SECTIONS AND STANDARDS.

DEFINITIONS

SPECIAL INSPECTION	INSPECTION OF CONSTRUCTION REQUIRING THE EXPERTISE OF AN APPROVED SPECIAL INSPECTOR IN ORDER TO ENSURE COMPLIANCE WITH THE BUILDING CODE AND THE APPROVED CONSTRUCTION DOCUMENTS.
SPECIAL INSPECTOR	A QUALIFIED PERSON EMPLOYED OR RETAINED BY AN APPROVED AGENCY AND APPROVED BY THE BUILDING OFFICIAL AS HAVING THE COMPETENCE NECESSARY TO INSPECT A PARTICULAR TYPE OF CONSTRUCTION REQUIRING SPECIAL INSPECTION.
PERIODIC	SPECIAL INSPECTION BY THE SPECIAL INSPECTOR WHO IS INTERMITTENTLY PRESENT WHERE THE WORK HAS BEEN OR IS BEING PERFORMED AND AT THE COMPLETION OF WORK.
CONTINUOUS	SPECIAL INSPECTION BY THE SPECIAL INSPECTOR WHO IS PRESENT CONTINUOUSLY WHEN AND WHERE THE WORK TO BE INSPECTED IS BEING PERFORMED
☑	INDICATES SPECIAL INSPECTION OF ITEM MAY BE REQUIRED FOR THE WORK DEFINED IN THE CONSTRUCTION DOCUMENTS FOR THIS PROJECT.

GENERAL NOTES

I. GENERAL NOTES:

1. ALL STRUCTURAL WORK SHALL CONFORM TO THE DRAWINGS, THE PROJECT SPECIFICATIONS, ALL DRAWING NOTES, AND THE 2022 CALIFORNIA BUILDING CODE (CBC).
2. ALL APPLICABLE REFERENCE STANDARDS, AS MODIFIED BY THE BUILDING CODE, INCLUDE:
   A. ASCE/SEI 7-16: MINIMUM DESIGN LOADS FOR BUILDINGS AND OTHER STRUCTURES
   B. AWS D1.1: STRUCTURAL WELDING CODE - STEEL
3. THE SCOPE OF WORK IS NOT SOLELY DEFINED BY THESE DOCUMENTS.
4. TYPICAL DETAILS APPLY THROUGHOUT THE PROJECT, EVEN IF NOT SPECIFICALLY REFERENCED IN PLANS OR DETAILS. DETAILS OF CONSTRUCTION NOT FULLY SHOWN OR NOTED ON THE DRAWINGS NOR CALLED OUT IN THE SPECIFICATIONS SHALL BE OF THE SAME SIZE AND CHARACTER AS FOR SIMILAR CONDITIONS WHICH ARE SHOWN AND NOTED.
5. ALL FORCES INDICATED IN THE STRUCTURAL DRAWINGS ARE SERVICE LOADS AS DEFINED BY ASCE-7, UNLESS NOTED OTHERWISE.
6. DO NOT USE SCALED DIMENSIONS; USE ONLY WRITTEN DIMENSIONS. WHERE NO DIMENSION IS PROVIDED, CONSULT THE ARCHITECT FOR CLARIFICATIONS BEFORE PROCEEDING WITH WORK.
7. THE CONTRACTOR SHALL BE SOLELY RESPONSIBLE FOR THE CONDITIONS OF THE JOB SITE INCLUDING SAFETY OF PERSONS AND PROPERTY AND THE MEANS AND METHODS OF CONSTRUCTION.
8. ALL STRUCTURAL WORK SHALL BE COORDINATED WITH ARCHITECTURAL, MECHANICAL, ELECTRICAL, PLUMBING, ETC. REQUIREMENTS. REFER TO ARCHITECTURAL DRAWINGS FOR DIMENSIONS NOT SHOWN ON PLAN. DISCREPANCIES AND/OR INTERFERENCES SHALL BE REPORTED TO THE ARCHITECT IMMEDIATELY.
9. OPENINGS SHALL NOT BE MADE IN ANY STRUCTURAL MEMBER UNLESS SPECIFICALLY SHOWN ON THE STRUCTURAL DRAWINGS OR APPROVED BY THE STRUCTURAL ENGINEER.
10. DEFICIENT WORK AND WORK NOT IN CONFORMANCE WITH THE CONTRACT DOCUMENTS AS IDENTIFIED BY THE ARCHITECT OR INSPECTOR SHALL BE REPAIRED AT THE CONTRACTOR'S EXPENSE. CONTRACTOR SHALL COMPENSATE OWNER FOR SERVICES ARISING FROM DEFICIENT WORK.
11. CONSTRUCTION MATERIALS SHALL BE SPREAD OUT WHEN PLACED ON FRAMED FLOORS OR ROOFS. THE CONSTRUCTION MATERIAL LOAD SHALL NOT EXCEED THE DESIGN LIVE LOAD PER SQUARE FOOT. CONTRACTOR SHALL BE RESPONSIBLE FOR SHORING WHERE STRUCTURE IS NOT COMPLETE OR HAS NOT ATTAINED DESIGN STRENGTH.

II. DESIGN LOADS:

1. WIND LOAD:

A. ULTIMATE DESIGN BASIC WIND SPEED Vult	95 MPH
B. WIND EXPSOURE CATEGORY:	C
C. INTERNAL PRESSURE COEFFICIENT (GCPi):	+/- 0.18
D. GUST EFFECT FACTOR (G):	0.85

2. SEISMIC LOAD:

A. SITE CLASS:	D (DEFAULT)
B. RISK CATEGORY:	II
C. SEISMIC IMPORTANCE FACTOR (I_p):	1.00
D. MAPPED SPECTRAL RESPONSE:	
a. SHORT PERIOD S_S:	1.32g
b. 1-SECOND PERIOD S_1:	0.48 g
E. DESIGN SPECTRAL RESPONSE (5% DAMPED):	
a. SHORT PERIOD S_{DS}:	1.06 g
F. SEISMIC DESIGN CATEGORY:	D

III. EXISTING STRUCTURE & EXISTING CONDITIONS

1. CONTRACTOR IS TO NOTIFY ENGINEER OF QUESTIONABLE EXISTING STRUCTURAL COMPONENTS (MASONRY WALLS, STEEL BEAMS & LINTEL, EXPOSED FOUNDATIONS, ETC.) AND FRAMING CONNECTIONS WHEN ENCOUNTERED.
2. CONTRACTOR TO VERIFY EXACT LOCATION OF ALL EXISTING STRUCTURAL COMPONENTS THAT WILL BE CONNECTED TO NEW FRAMING PRIOR TO STEEL FABRICATION. IT IS THE CONTRACTOR'S RESPONSIBILITY TO VERIFY ALL EXISTING DIMENSIONS AND COORDINATE THESE DIMENSIONS WITH THE STEEL FABRICATOR PRIOR TO STEEL FABRICATION TO ENSURE ARCHITECTURAL AND STRUCTURAL DESIGN CONCEPT. CONTRACTOR SHALL NOTIFY ARCHITECT AND/OR ENGINEER OF DISCREPANCIES.

IV. MECHANICAL/ELECTRICAL/PLUMBING SYSTEM SUPPORTS

1. THE CONTRACTOR SHALL DESIGN AND SUPPLY ALL ADDITIONAL MISCELLANEOUS METALS AND SYSTEM SUPPORT COMPONENTS THAT ARE NECESSARY TO SUPPORT ALL MECHANICAL, ELECTRICAL (TELECOM, AUDIO VISUAL, ETC.) AND PLUMBING/FIRE PROTECTION SYSTEMS. SUCH METALS AND SUPPORT COMPONENTS AND THEIR CONNECTIONS SHALL BE PROVIDED AS NECESSARY TO DIRECTLY AND CONCENTRICALLY IMPOSE LOADS ON THE PRIMARY STRUCTURE. STEEL ROOF DECK SHALL NOT DIRECTLY SUPPORT THESE SYSTEMS. THE CONNECTIONS TO THE PRIMARY STRUCTURE ARE SUBJECT TO THE REQUIREMENTS OF THE MISCELLANEOUS METALS SECTION ABOVE.

V. QUALITY ASSURANCE AND SPECIAL INSPECTIONS

1. OWNER WILL ENGAGE AN INDEPENDENT TESTING AGENCY TO PERFORM THE TESTS AND INSPECTIONS SHOWN ON THE 'STRUCTURAL TESTING AND INSPECTIONS' SHEET. IT IS THE CONTRACTOR'S RESPONSIBILITY TO PROVIDE ADEQUATE PRIOR NOTICE TO ALLOW FOR COMPLETION OF THESE REQUIREMENTS.

VI. STRUCTURAL LUMBER

1. ALL STRUCTURAL SAWN LUMBER SHALL BE DOUGLAS FIR LARCH AS GRADED BY THE WWPA OR WCLIB WITH THE FOLLOWING MINIMUM GRADES, UNLESS NOTED OTHERWISE:
   A. 4X AND LARGER BEAMS OR JOISTS, CONCEALED: NO. 1
   B. 4X AND LARGER BEAMS OR JOISTS, EXPOSED: SELECT STRUCTURAL
2. ALL STRUCTURAL COMPOSITE LUMBER (SCL) OR ENGINEERED LUMBER SHALL BE AS FOLLOWS:
   A. I-JOISTS: TJI JOISTS MANUFACTURED BY WEYERHAUSER (ESR-1153)
   B. LSL: TIMBERSTRAND LSL MANUFACTURED BY WEYERHAUSER (ESR-1387)
   C. LVL: MICROLLAM LVL (2.0E) MANUFACTURED BY WEYERHAUSER (ESR-1387)
   D. PSL: PARALLAM PSL (2.0E) MANUFACTURED BY WEYERHAUSER (ESR-1387)
   E. SUBSTITUTION OF PRODUCTS LISTED ABOVE SHALL BE SUBMITTED TO ENGINEER FOR REVIEW AND APPROVAL.
3. ALL STRUCTURAL TIMBER FRAMING SHALL HAVE A MAXIMUM MOISTURE CONTENT OF 19% AT THE TIME OF ENCLOSURE, REGARDLESS OF THE MOISTURE CONTENT AT THE TIME OF MANUFACTURE. TIMBER FLOOR FRAMING, INCLUDING JOISTS AND BEAMS, WITH MORE THAN 2 FRAMED LEVELS ABOVE THEM SHALL BE DESIGNATED AS 'S-DRY' OR 'MC15' AND HAVE A MAXIMUM MOISTURE CONTENT OF 15% AT THE TIME OF ENCLOSURE.
4. ALL LUMBER LOCATED IN DIRECT CONTACT WITH CONCRETE OR MASONRY INCLUDING BUT NOT LIMITED TO SILL PLATES, NAILERS, AND LEDGERS SHALL BE PRESSURE TREATED DOUGLAS FIR.
5. ALL HARDWARE SHALL BE SIMPSON STRONG-TIE CO INSTALLED PER MANUFACTURERS RECOMMENDATIONS. SUBSTITUTION OF EQUIVALENT HARDWARE FROM AN ALTERNATE MANUFACTURER SHALL BE SUBMITTED TO THE ENGINEER FOR REVIEW AND APPROVAL.
6. MINIMUM FASTENING AND NAILING OF TIMBER COMPONENTS SHALL BE IN ACCORDANCE WITH CBC TABLE 2304.10.1.
7. FASTENERS SHALL BE PROVIDED NEW AND WITHOUT EXCESSIVE RUST. ALL FASTENERS EXPOSED TO WEATHER SHALL BE GALVANIZED.
8. ALL METAL FASTENERS IN CONTACT WITH PRESERVATIVE-TREATED LUMBER SHALL BE STAINLESS STEEL OR OTHERWISE CERTIFIED BY THE MANUFACTURER TO RESIST CORROSION CAUSED BY THE SPECIFIC TREATMENT APPLIED TO THE WOOD.
9. DO NOT CUT, BORE, COUNTERSINK OR NOTCH WOOD MEMBERS EXCEPT WHERE EXPLICITY SHOWN IN THE DETAILS.
10. BOLTS AND LAG SCREWS:
   A. BOLTS AND LAG SCREWS SHALL CONFORM TO ASTM A307 AND MEET THE DIMENSIONAL STANDARDS OF ANSI/ASME B18.2.1.
   B. HOLES FOR BOLTS SHALL BE A MINIMUM 1/32" TO A MAXIMUM OF 1/16" LARGER THAN THE BOLT DIAMETER.
   C. BOLTS SHALL BE ACCURATELY ALIGNED IN MAIN MEMBERS AND SIDE PLATES. BOLTS SHALL NOT BE FORCIBLY DRIVEN INTO PLACE.
   D. BORED LEAD HOLES FOR LAG SCREWS SHALL BE 40-70% OF THE SHANK DIAMETER AT THE THREADED PORTION OF THE SCREW, AND THE SAME DIAMETER AS THE SHANK AT THE SHANK.
   E. LAG SCREWS SHALL BE TURNED, NOT DRIVEN INTO PLACE.
   F. ALL BOLTS, NUTS, AND LAG SCREWS SHALL BE PROVIDED WITH FLAT OR MALLEABLE WASHERS WHERE BEARING AGAINST DIRECTLY AGAINST WOOD.
   G. ALL BOLTS AND LAG SCREWS SHALL BE TIGHTENED UPON INSTALLATION AND RE-TIGHTENED BEFORE CLOSING IN OR AT COMPLETION OF JOB.

VII. STRUCTURAL STEEL:

1. STRUCTURAL STEEL SHALL BE DETAILED, FABRICATED AND ERECTED IN ACCORDANCE WITH AISC 360.
2. UNLESS OTHERWISE NOTED, ALL STRUCTURAL STEEL SHALL CONFORM TO THE FOLLOWING:
   A. ANGLES AND CHANNELS: ASTM A36 (FY = 36 KSI)
   B. PLATES, BARS: ASTM A36 (FY = 36 KSI)
3. FIELD CUTTING OR DRILLING STRUCTURAL STEEL IS STRICTLY PROHIBITED WITHOUT PRIOR REVIEW AND APPROVAL BY SEOR. ALL HOLES AND CUTS SHALL BE PERFORMED IN THE SHOP AS IDENTIFIED ON STRUCTURAL DRAWINGS OR SHOP DRAWINGS.
4. WELDED CONNECTIONS:
   A. ALL WELDS SHALL CONFORM TO AWS D1.1. WELDING ELECTRODES SHALL BE CLASS E70XX.
   B. MINIMUM FILLET WELD SIZE SHALL BE 1/4 " UNLESS NOTED OTHERWISE.
   C. WELDING SHALL BE PERFORMED BY QUALIFIED WELDERS, REFER TO SPECIFICATIONS.
   D. WHERE FIELD WELDING IS SPECIFICALLY NOTED, THE DESIGNATION IS GIVEN AS A SUGGESTED CONSTRUCTION PROCEDURE ONLY. THE CONTRACTOR SHALL DETERMINE SUITABILITY OF SHOP OR FIELD WELDING FOR ALL CONDITIONS. ALL BOLTED CONNECTIONS MUST BE IN ADDITION TO THESE REQUIREMENTS.
   E. WELD LENGTHS SPECIFIED ON PLANS ARE THE NET EFFECTIVE LENGTH. WELD SIZE SHALL BE AISC MINIMUM UON AS LARGER WELD.
   F. ALL CJP WELDS SHALL BE MADE WITH FILLER METAL WITH A MINIMUM CVN TOUGHNESS OF 20 FT-LBS AT -20 DEGREES F. NDT AND INSPECTIONS PER THE 'STRUCTURAL TESTING AND INSPECTIONS' SHEET.
   G. CONTRACTOR TO PROVIDE WELDING PROCEDURE SPECIFICATION FOR REVIEW AND APPROVAL BY SEOR.
5. STEEL FINISHES SHALL BE AS FOLLOWS, UNLESS NOTED OTHERWISE IN ARCHITECTURAL SPECIFICATIONS:
   A. INTERIOR TO RECEIVE ENCASEMENT OR SPRAY-ON FIREPROOFING: NONE
   B. INTERIOR TO RECEIVE FINISH PAINT: REFER TO SPECIFICATIONS
   C. EXTERIOR: HOT-DIPPED GALVANIZED COATING CONFORMING TO ASTM A123 OR HIGH-PERFORMANCE COATING AT CONDITIONS AS IDENTIFIED IN SPECIFICATIONS.
6. SCREWS SHALL BE SELF-TAPPING AND COMPLY WITH ASTM C1513.

ABBREVIATIONS

#	POUND
&	AND
(N)	NEW
@	AT
AB	ANCHOR BOLT
ACS	ALL COMMON SIDES
ADDL	ADDITIONAL
AESS	ARCHITECTURALLY EXPOSED STRUCTURAL STEEL
ALT	ALTERNATE
ARCH, ARCH'L	ARCHITECT, ARCHITECTURAL
BL	BRICKLEDGE
BLDG	BUILDING
BLKG	BLOCKING
BM	BEAM
BN	BOUNDARY NAILING
BO	BOTTOM OF
BOB	BOTTOM OF BEAM
BOD	BOTTOM OF DECK
BOS	BOTTOM OF STEEL
BOT, BOTT	BOTTOM
BP	BASE PLATE
BRBF	BUCKLING RESTRAINED BRACED FRAME
BRG	BEARING
BTWN	BETWEEN
C	CHANNEL
CB	CONCRETE BEAM
CC	CARRIED COLUMN
CEN	CENTER
CFMF	COLD-FORMED METAL FRAMING
CIP	CAST IN PLACE
CJ	CONTROL JOINT
CJP	COMPLETE JOINT PENETRATION
CL	CENTERLINE
CLR	CLEAR
CMU	CONCRETE MASONRY UNIT
COL	COLUMN
CONC	CONCRETE
CONN	CONNECT, CONNECTION
CONT	CONTINUOUS
CTR	CENTERED
CWI	CERTIFIED WELDING INSPECTOR
D, DIA	DIAMETER
DBA	DEFORMED BAR ANCHOR
DBL	DOUBLE
DEF	DEFORMED, DEFINITION
DEFL	DEFLECTION
DET, DTL	DETAIL
DIAG	DIAGONAL
DN	DOWN
DWG	DRAWING
EA	EACH
EF	EACH FACE
EJ	EXPANSION JOINT
EL	ELEVATION
ELEV	ELEVATOR
EN	EDGE NAILING
EOR	ENGINEER OF RECORD
EOS	EDGE OF SLAB
EQ	EQUAL
EQ SPA	EQUAL SPACE
ES	EACH SIDE
EW	EACH WAY
EXIST, (E)	EXISTING
EXT	EXTERIOR
FD	FLOOR DRAIN
FDN, FNDN	FOUNDATION
FF EL	FINISH FLOOR ELEVATION
FN	FIELD NAILING
FOA	FACE OF ANGLE
FOC	FACE OF CONCRETE
FOM	FACE OF MASONRY
FT	FEET
FTG	FOOTING
Fy	YIELD STRESS
GA	GAGE, GAUGE
GALV	GALVANIZED
GB	GRADE BEAM
GLB	GLUED-LAMINATED BEAM
GT	GIRDER TRUSS
H, HORIZ	HORIZONTAL
HC	HOLLOW CORE
HI	HIGH
HK	HOOK
HSS	HOLLOW STRUCTURAL STEEL
IN	INCHES
INFO	INFORMATION
INT	INTERIOR
JST	JOIST
JT	JOINT
K	KIPS
KB	KNEE BRACE
L	ANGLE
LB	POUND
LF	LINEAR FOOT
LG	LENGTH
LLBB	LONG LEG BACK TO BACK
LLH	LONG LEG HORIZONTAL
LLV	LONG LEG VERTICAL
LO	LOW
LT WT	LIGHTWEIGHT
LVL	LEVEL
LWC	LIGHT WEIGHT CONCRETE
MAX	MAXIMUM
MC	MOMENT CONNECTION
MCJ	MASONRY CONTROL JOINT
MECH	MECHANICAL
MEP	MECHANICAL, ELECTRICAL & PLUMBING
MEZZ	MEZZANINE
MFR, MANUF	MANUFACTURER
MID	MIDDLE
MIL	MILLIMETER
MIN	MINIMUM
MISC	MISCELLANEOUS
MO	MASONRY OPENING
MTL	METAL
N	NORTH
NA	NOT APPLICABLE
NDT	NON-DESTRUCTIVE TESTING
NIC	NOT IN CONTRACT
NTS	NOT TO SCALE
OC	ON CENTER
OH	OPPOSITE HAND
OPNG	OPENING
OPP	OPPOSITE
OWJ	OPEN WEB JOIST
PAF	POWER ACTUATED FASTENERS
PERP	PERPENDICULAR
PJP	PARTIAL JOINT PENETRATION
PL	PLATE
PLF	POUNDS PER LINEAR FOOT
PLYWD	PLYWOOD
PSF	POUNDS PER SQUARE FOOT
PSI	POUNDS PER SQUARE INCH
R	RADIUS
REF	REFER, REFERENCE
REINF	REINFORCED, REINFORCEMENT
REM	REMAINDER
REQ'D	REQUIRED
REQ'MTS, REQMTS	REQUIREMENTS
REV	REVISION
SAD	SEE ARCHITECTURAL DRAWINGS
SC	SLIP CRITICAL
SCHED	SCHEDULE
SECT	SECTION
SF	SQUARE FEET
SHT	SHEET
SHTG	SHEATHING
SIM	SIMILAR
SMD	SEE MECHANICAL DRAWINGS
SMS	SHEET METAL SCREW
SOG	SLAB ON GRADE
SPA	SPACES, SPACING
SQ	SQUARE
SSH	SHORT SLOTTED HOLE
STD	STANDARD
STL	STEEL
STRUCT	STRUCTURE, STRUCTURAL
SUPP	SUPPORT
T&B	TOP AND BOTTOM
TEMP	TEMPORARY
THK	THICK
TO	TOP OF
TOC	TOP OF CONCRETE
TOF	TOP OF FOUNDATION
TOM	TOP OF MASONRY
TOS	TOP OF STEEL
TOSC	TOP OF STRUCTURAL CONCRETE
TOSL	TOP OF SLAB
TOT	TOTAL
TOW	TOP OF WALL
TYP	TYPICAL
UON	UNLESS OTHERWISE NOTED
V, VERT	VERTICAL
VIF	VERIFY IN FIELD
W	WIDE FLANGE
W/	WITH
W/O	WITHOUT
WB	WIND BRACE
WBBP	WIND BRACE BASEPLATE
WHSS	WELDED HEADED STEEL STUD
WP	WORKING POINT, WORK POINT
WRT	WITH RESPECT TO
WT	WEIGHT
WWF	WELDED-WIRE FABRIC
YD	YARD

REGISTERED PROFESSIONAL ENGINEER
ALAN W. DYCK
5470
EXP. 09-30-24
STRUCTURAL
STATE OF CALIFORNIA
03-22-24

Stantec
801 S. Figueroa Street, Suite 300
Los Angeles, CA 90017

Copyright Reserved
The Contractor shall verify and be responsible for all dimensions. DO NOT scale the drawing - any errors or omissions shall be reported to Stantec without delay.
The Copyrights to all designs and drawings are the property of Stantec. Reproduction or use for any purpose other than that authorized by Stantec is forbidden.

REVISION	DESCRIPTION	DATE
5/13/2024	100% RESUBMITTAL	
03/27/2024	100% CONSTRUCTION DRAWING SUBMITTAL	
02/13/2024	UPDATED 90% CONSTRUCTION DRAWING SUBMITTAL	
12/07/2023	90% CONSTRUCTION DRAWING SUBMITTAL	

REPLACEMENT OF MECHANICAL UNITS AT SANTA ANA BUS BASE
4301 W. MAC ARTHUR BLVD., SANTA ANA, CA

GENERAL NOTES

JOB #:	
DESIGN BY:	IS
DRAWN BY:	DK
CHECKED BY:	MP
DATE:	12/07/2023
SCALE:	3/4" = 1'-0"
SHEET:	**S-100F**

OCTA
ORANGE COUNTY TRANSPORTATION AUTHORITY
550 SOUTH MAIN STREET, ORANGE, CA

Autodesk Docs://2014233703_Santa_Ana_Bus/stn_struc_2014233703_Santa_Ana_Bus_OCTA_CTO-3_Mech_Units.rvt

3/22/2024 10:38:08 AM

IFB 4-2550 EXHIBIT B

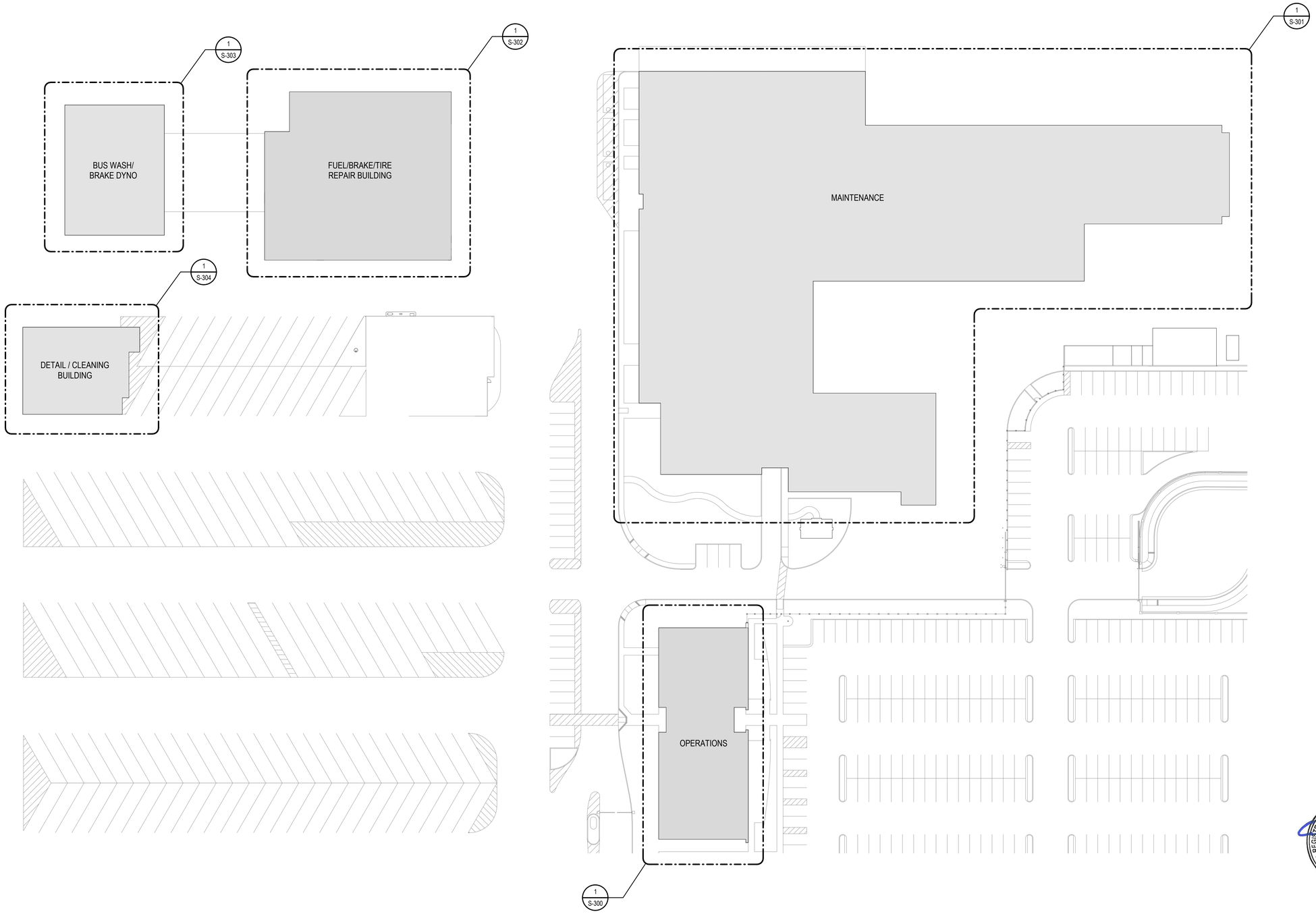

1
S-200
OVERALL PLAN
1" = 40'-0"

N

Stantec
801 S. Figueroa Street, Suite 300
Los Angeles, CA 90017

Copyright Reserved
The Contractor shall verify and be responsible for all dimensions. DO NOT scale the drawing - any errors or omissions shall be reported to Stantec without delay.
The copyright in all designs and drawings are the property of Stantec. Reproduction or use for any purpose other than that authorized by Stantec is forbidden.

REVISION	DESCRIPTION	DATE
5/13/2024	100% RESUBMITTAL	
03/27/2024	100% CONSTRUCTION DRAWING SUBMITTAL	
02/13/2024	UPDATED 90% CONSTRUCTION DRAWING SUBMITTAL	
12/07/2023	90% CONSTRUCTION DRAWING SUBMITTAL	

REPLACEMENT OF MECHANICAL UNITS AT SANTA ANA BUS BASE
4301 W. MAC ARTHUR BLVD., SANTA ANA, CA

OVERALL PLAN

JOB #:	
DESIGN BY:	IS
DRAWN BY:	DK
CHECKED BY:	MP
DATE:	12/07/2023
SCALE:	1" = 40'-0"
SHEET:	S-200F

REGISTERED PROFESSIONAL ENGINEER
ALAN W. DYCK
5470
EXP. 09-30-24
STRUCTURAL
STATE OF CALIFORNIA
03-22-24

OCTA
ORANGE COUNTY
TRANSPORTATION AUTHORITY
550 SOUTH MAIN STREET, ORANGE, CA

Autodesk Docs://2014233703_Santa_Ana_Bus/stn_struc_2014233703_Santa_Ana_Bus_OCTA_CTO-3_Mech_Units.rvt

3/22/2024 10:38:09 AM

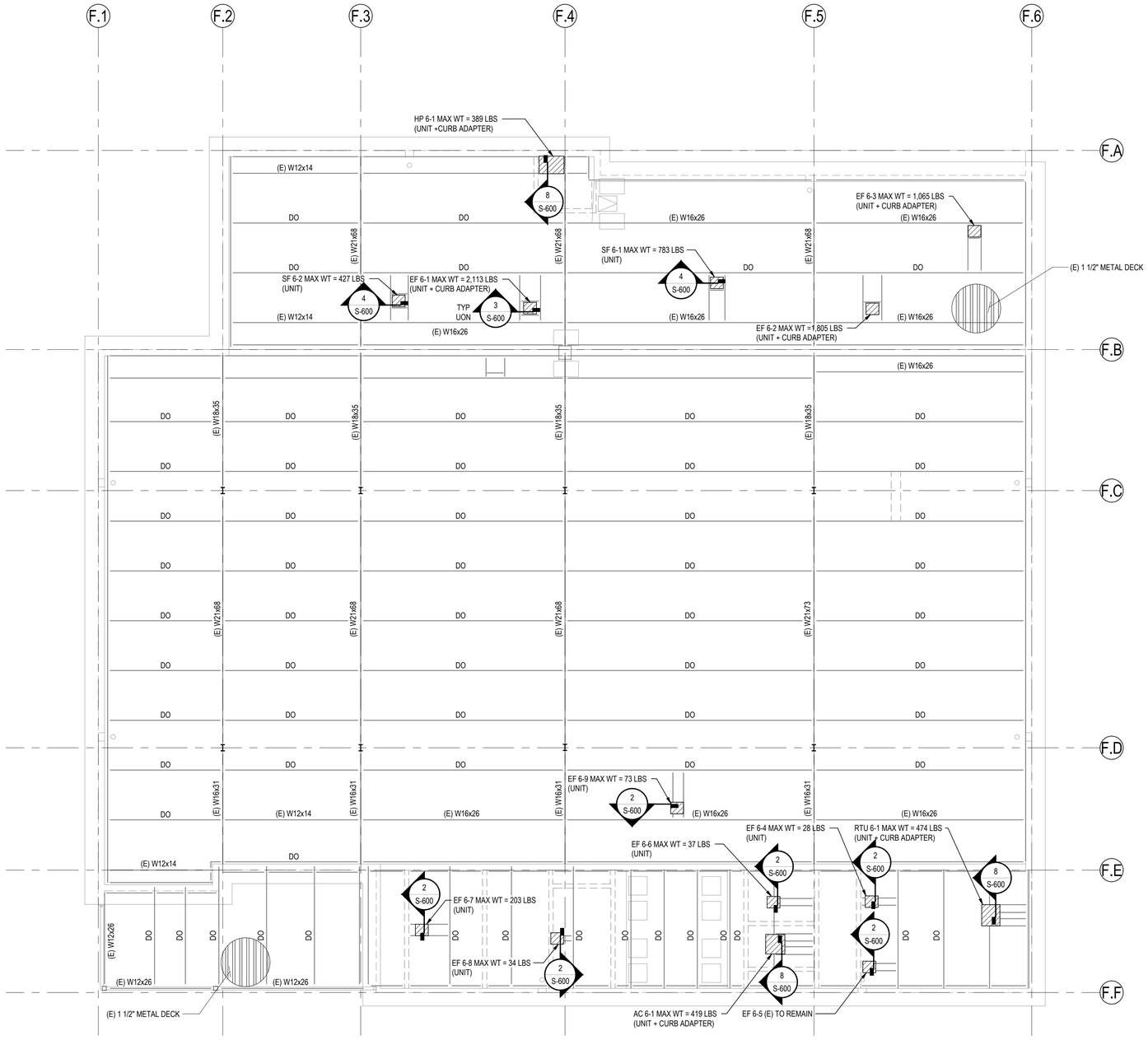

1
S-302

FUEL/BRAKE/TIRE REPAIR BUILDING STRUCTURAL ROOF PLAN

1" = 10'-0"

N

ROOF PLAN NOTES:

1. SEE SHEET S-100 FOR STRUCTURAL GENERAL NOTES
2. VERIFY/OBTAIN ALL DIMENSIONS FROM MEP DRAWINGS.
3. INDICATES (E) EXTERIOR PERIMETER WALL.
4. PROVIDE AND COORDINATE OPENING FOR MECHANICAL WORK AS REQUIRED.
5. CONTRACTOR TO FIELD VERIFY EXISTING CONDITIONS PRIOR TO COMMENCING WORKS. CONTRACTOR TO NOTIFY EOR OF DISREPANCIES BETWEEN FIELD CONDITIONS AND DRAWINGS.
6. INDICATES (N) MECHANICAL UNIT TO REPLACE EXISTING TYP UON.
7. EXISTING ROOF FRAMING INFORMATION WAS OBTAINED FROM RECORD DRAWINGS DATED 10/11/06.

IFB 4-2550 EXHIBIT B

Stantec

801 S. Figueroa Street, Suite 300
Los Angeles, CA 90017

Copyright Reserved
The Contractor shall verify and be responsible for all dimensions. DO NOT scale the drawing - any errors or omissions shall be reported to Stantec without delay.
The Copyright to all designs and drawings are the property of Stantec. Reproduction or use for any purpose other than that authorized by Stantec is forbidden.

REVISION	DESCRIPTION	DATE
5/13/2024	100% RESUBMITTAL	
03/27/2024	100% CONSTRUCTION DRAWING SUBMITTAL	
02/13/2024	UPDATED 90% CONSTRUCTION DRAWING SUBMITTAL	
12/07/2023	90% CONSTRUCTION DRAWING SUBMITTAL	

REPLACEMENT OF MECHANICAL UNITS AT SANTA ANA BUS BASE
4301 W. MAC ARTHUR BLVD., SANTA ANA, CA

FUEL/BRAKE/TIRE REPAIR BUILDING STRUCTURAL ROOF PLAN

JOB #:	
DESIGN BY:	IS
DRAWN BY:	DK
CHECKED BY:	MP
DATE:	12/07/2023
SCALE:	1" = 10'-0"
SHEET:	S-302F

REGISTERED PROFESSIONAL ENGINEER
ALAN W. DYCK
5470
EXP. 09-30-24
STRUCTURAL
STATE OF CALIFORNIA

03-22-24

OCTA
ORANGE COUNTY TRANSPORTATION AUTHORITY
550 SOUTH MAIN STREET, ORANGE, CA

Autodesk Docs://2014233703_Santa_Ana_Bus/stn_struc_2014233703_Santa_Ana_Bus_OCTA_CTO-3_Mech_Units.rvt

3/22/2024 10:38:16 AM

MODEL #'S	WT (LBS)	B (IN)	D (IN)	H (IN)	CG (IN)
SF 4-1	175	26	26	27.25	49
SF 5-1, 5-2, 5-3	766	52	52	39.25	56
SF 5-4	783	52	52	39.25	56
SF 5-5	307	34	34	27.25	49
SF 5-8	199	26	26	27.25	49
SF 5-9,6-2	427	40	40	31.25	52
SF 5-12	194	26	26	27.25	49
SF 5-13,5-16	196	26	26	27.25	49
SF 5-14	307	34	34	27.25	49
SF 5-15	194	26	26	27.25	49
SF 6-1	783	52	52	39.25	56
AC 4-2	419	52	45	46	60
AC 5-1, 5-2	419	52	45	46	73

NOTES:
1. MAX WEIGHT DOES NOT INCLUDE (E) CURB.
2. RE-USE EXISTING CURB SMD.

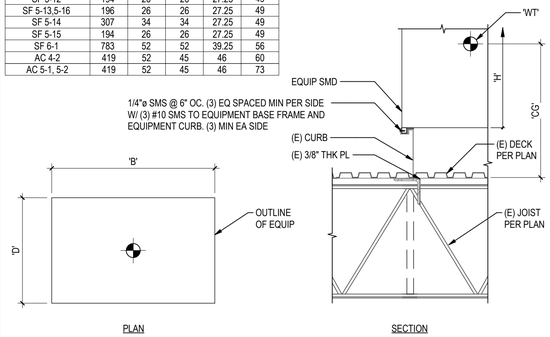

4 S-600 MECH UNIT ANCHORAGE GROUP C

NTS

MODEL #'S	WT (LBS)	B (IN)	D (IN)	H (IN)	CG (IN)
EF 5-1	2595	66	66	136.79	122
EF 5-2 & 5-5	2095	60	60	125.19	108
EF 5-3 & 5-4	2095	60	60	125.19	108
EF 5-6	745	40	40	83.45	94
EF 5-25	1035	48	48	103.79	105
EF 5-28	1225	66	66	134.79	121
EF 5-37	1036	48	48	103.79	105
EF 6-1	2113	60	60	127.19	117
EF 6-2	1805	56	56	120.45	114
EF 6-3	1065	48	48	101.79	104
SF 5-6	352	34	34	27.25	71
SF 5-10	377	34	34	27.25	71

NOTES:
1. MAX WEIGHT DOES NOT INCLUDE (E) CURB.
2. RE-USE EXISTING CURB SMD.

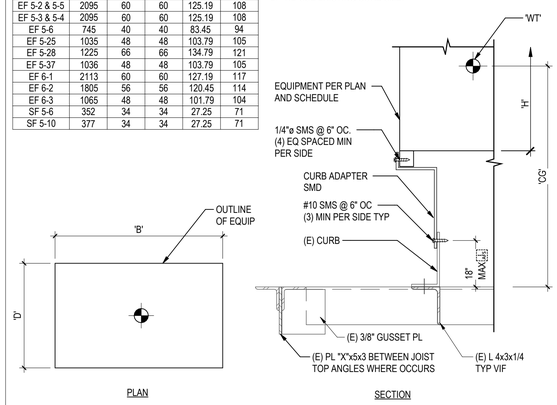

3 S-600 MECH UNIT ANCHORAGE GROUP B

NTS

MODEL #'S	WT (LBS)	B (IN)	D (IN)	H (IN)	CG (IN)
EF 4-1	45	19	19	28.25	46
EF 4-2	54	19	19	28.25	46
EF 4-3	54	19	19	28.25	46
EF 4-4, 5-26	34	19	19	13.38	38
EF 5-7, 5-8, 5-9, 5-10	165	34	34	33.88	49
EF 5-11	28	17	17	13.5	38
EF 5-13	54	19	19	28.25	46
EF 5-16, 5-17, 5-18	165	34	34	33.88	49
EF 5-19	140	30	30	28.63	46
EF 5-20	97	22	22	29.75	47
EF 5-21, 5-22	132	30	30	28.63	46
EF 5-24	76	22	22	29.75	47
EF 5-29	84	22	22	29.75	47
EF 5-31	119	22	22	29.75	47
EF 5-32	34	19	19	13.38	38
EF 5-33	203	34	34	33.88	49
EF 5-34	119	22	22	29.75	47
EF 5-35	67	19	19	28.25	46
EF 5-38	54	19	19	28.25	46
EF 5-39	40	19	19	15.25	39
EF 5-40	57	19	19	28.25	46
EF 5-41	72	22	22	29.75	47
EF 6-4	28	17	17	13.5	38
EF 6-6	37	19	19	13.38	38
EF 6-7	203	34	34	33.88	49
EF 6-8	34	19	19	13.38	38
EF 6-9	73	22	22	29.75	47
EF 7-1	773	40	40	36	50
EF 7-2	141	30	30	28.63	46
EF 8-1	45	19	19	28.25	46
EF 5-42	95	22.91	30.88	26	47

NOTES:
1. MAX WEIGHT DOES NOT INCLUDE (E) CURB.
2. RE-USE EXISTING CURB SMD.

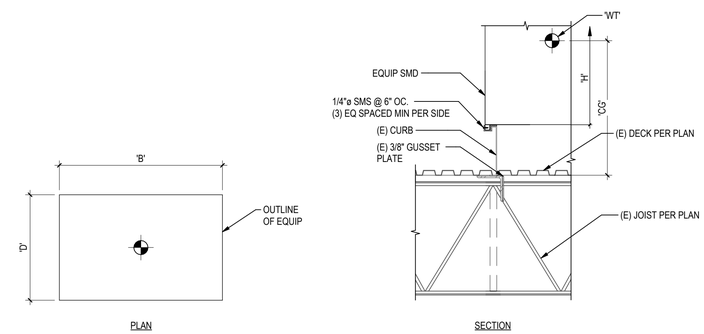

2 S-600 MECH UNIT ANCHORAGE GROUP A

NTS

MODEL #'S	WT (LBS)	B (IN)	D (IN)	H (IN)	CG (IN)
AC 4-1	419	52	45	46	73
RTU 5-4	389	48.8	41.3	35.4	80.3
RTU 6-1	474	58.6	44.3	39.4	94
HP 6-1	389	52	45	46	73
AC 6-1	419	52	45	46	73
RTU 5-5	389	52	45	46	73

NOTES:
1. MAX WEIGHT INCLUDES EQUIPMENT WT & CURB ADAPTER ONLY.
2. RE-USE EXISTING CURB SMD.

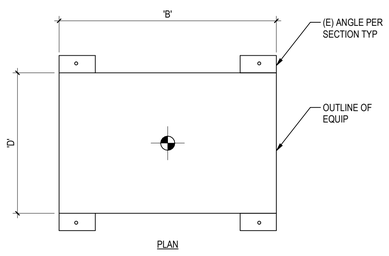

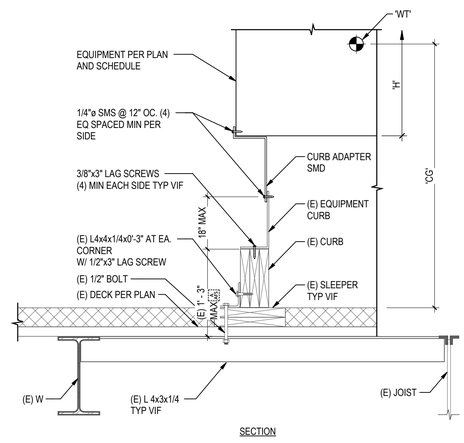

8 S-600 MECH UNIT ANCHORAGE GROUP F

NTS

MODEL #'S	WT (LBS)	B (IN)	D (IN)	H (IN)	CG (IN)
RTU 4-1	2106	52	45	46	119
RTU 4-2	968	88.08	53.28	50.88	87
RTU 4-3	1020	88.08	53.28	50.88	87
RTU 4-4	1020	88.08	53.28	50.88	87
RTU 5-1, 5-2	1924	123	87	59.04	94
RTU 5-3	1924	123	87	59.04	94

NOTES:
1. MAX WEIGHT INCLUDES EQUIPMENT WT & CURB ADAPTER ONLY.
2. RE-USE EXISTING CURB SMD.

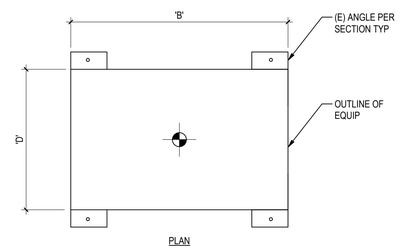

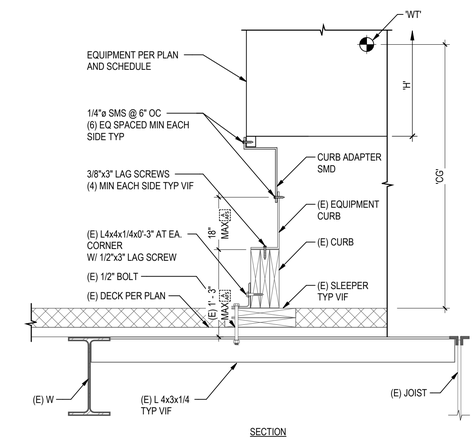

6 S-600 MECH UNIT ANCHORAGE GROUP E

NTS

MODEL #'S	WT (LBS)	B (IN)	D (IN)	H (IN)	CG (IN)
MAU 5-1	3129	186	91	60	85.5
MAU 5-2,5-5	2158	165.5	78	51	68.5
MAU 5-3,5-4	2158	165.5	78	51	68.5
MAU 5-6	3134	186	91	60	86.5
MAU 5-7	1407	140	52	39	68.5
MAU 5-8	1377	140	52	39	68.5

NOTES:
1. MAX WEIGHT INCLUDES EQUIPMENT WT & CURB ADAPTER ONLY.
2. RE-USE EXISTING CURB SMD.

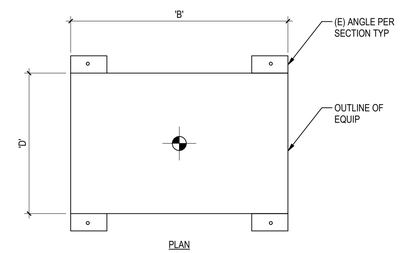

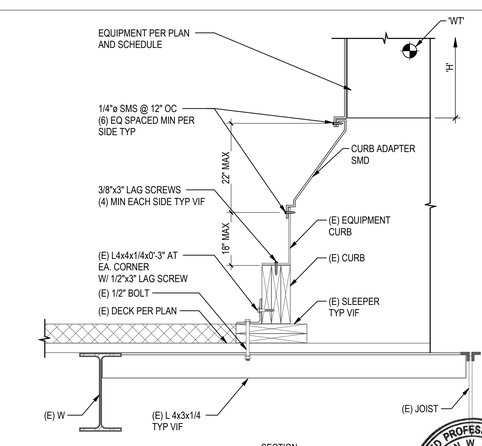

10 S-600 MECH UNIT ANCHORAGE GROUP D

NTS

REGISTERED PROFESSIONAL ENGINEER ALAN W. DYER 5470 EXP. 09-30-24 STRUCTURAL STATE OF CALIFORNIA
03-22-24

IFB 4-2550 EXHIBIT B

Stantec
801 S. Figueroa Street, Suite 300
Los Angeles, CA 90017

Copyright Reserved
The Contractor shall verify and be responsible for all dimensions. DO NOT scale the drawing - any errors or omissions shall be reported to Stantec without delay.
This drawing is the property of Stantec and must not be reproduced or used for any purpose other than that authorized by Stantec in writing before hand. Reproduction or use for any purpose other than that authorized by Stantec is forbidden.

REVISION	DESCRIPTION	DATE
5/13/2024	100% RESUBMITTAL	
03/27/2024	100% CONSTRUCTION DRAWING SUBMITTAL	
02/13/2024	UPDATED 90% CONSTRUCTION DRAWING SUBMITTAL	
12/07/2023	90% CONSTRUCTION DRAWING SUBMITTAL	

REPLACEMENT OF MECHANICAL UNITS AT SANTA ANA BUS BASE

4301 W. MAC ARTHUR BLVD., SANTA ANA, CA

ANCHORAGE SCHEDULES

JOB #:	
DESIGN BY:	IS
DRAWN BY:	DK
CHECKED BY:	MP
DATE:	12/07/2023
SCALE:	As indicated
SHEET:	S-600F

OCTA

ORANGE COUNTY TRANSPORTATION AUTHORITY
550 SOUTH MAIN STREET, ORANGE, CA

Autodesk Docs://2014233703_Santa_Ana_Bus/stn_struc_2014233703_Santa_Ana_Bus_OCTA_CTO-3_Mech_Units.rvt

3/22/2024 10:38:18 AM

IFB 4-2550 EXHIBIT B

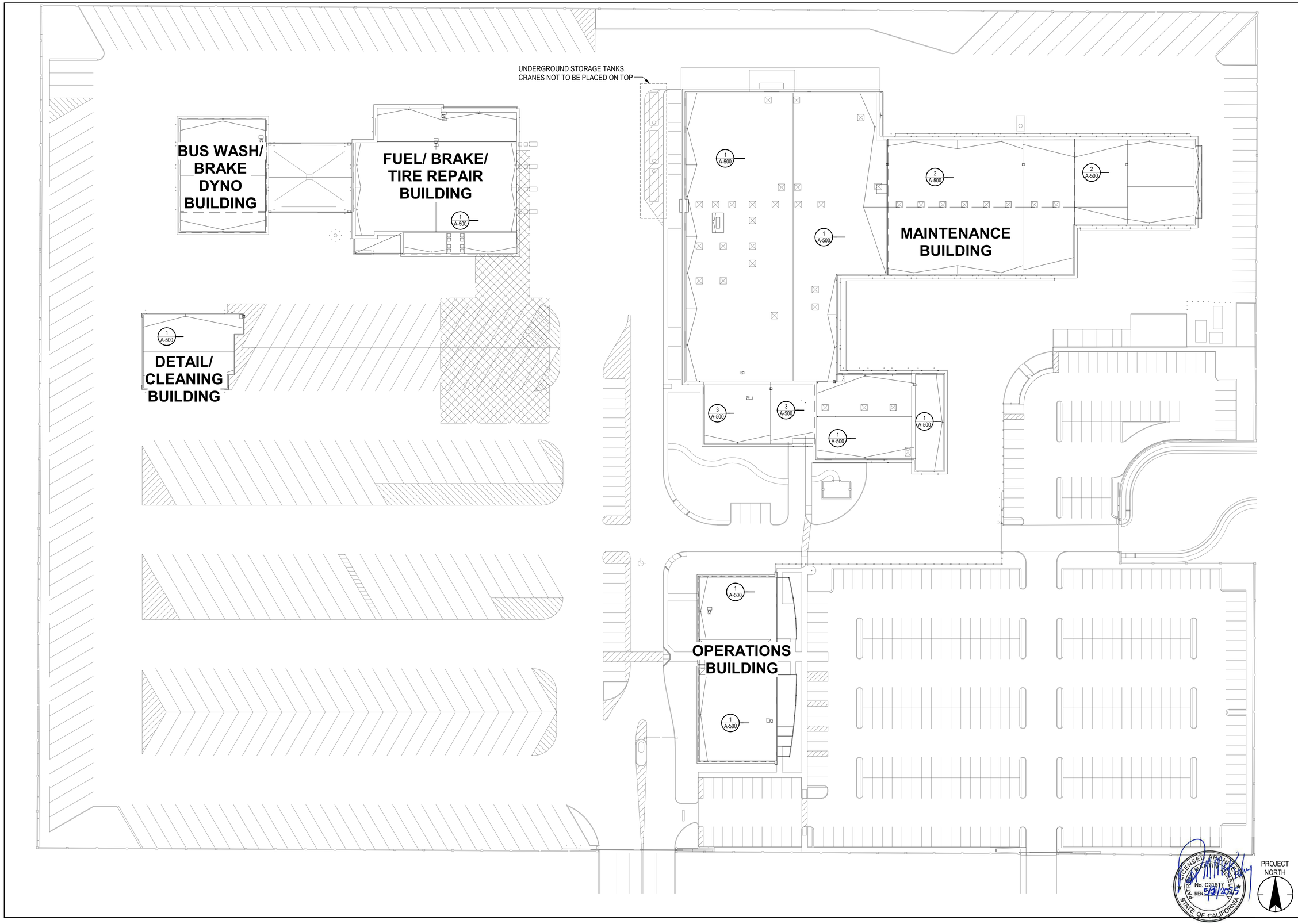

PROJECT NORTH

LICENSED ARCHITECT
PATRICK MARTIN HACKELEY
No. C21617
REN. 5/31/2025
STATE OF CALIFORNIA

Stantec
801 S. Figueroa Street, Suite 300
Los Angeles, CA 90017

Copyright Reserved
The Contractor shall verify and be responsible for all dimensions. DO NOT scale the drawing - any errors or omissions shall be reported to Stantec without delay.
The Copyright in the design and drawing is the property of Stantec. Reproduction or use for any purpose other than that authorized by Stantec is forbidden.

REVISION	DESCRIPTION	DATE
	100% RESUBMITTAL	5/13/2024
3	100% CONSTRUCTION DRAWING SUBMITTAL	03/18/2024
2	90% UPDATED CONSTRUCTION SUBMITTAL	02/13/2024
1	90% CONSTRUCTION DRAWING SUBMITTAL	12/07/2023

REPLACEMENT OF MECHANICAL UNITS AT SANTA ANA BUS BASE

4301 W MacArthur Blvd, Santa Ana, CA 92704

ARCHITECTURAL SITE PLAN

JOB #:	
DESIGN BY:	Designer
DRAWN BY:	Author
CHECKED BY:	Checker
DATE:	
SCALE:	1" = 40'-0"
SHEET:	A-100F

OCTA

ORANGE COUNTY TRANSPORTATION AUTHORITY
550 SOUTH MAIN STREET, ORANGE, CA

Autodesk Docs://2014233703_Santa_Ana_Bus/arch_2014233703-Revit22.rvt

5/9/2024 10:14:26 AM

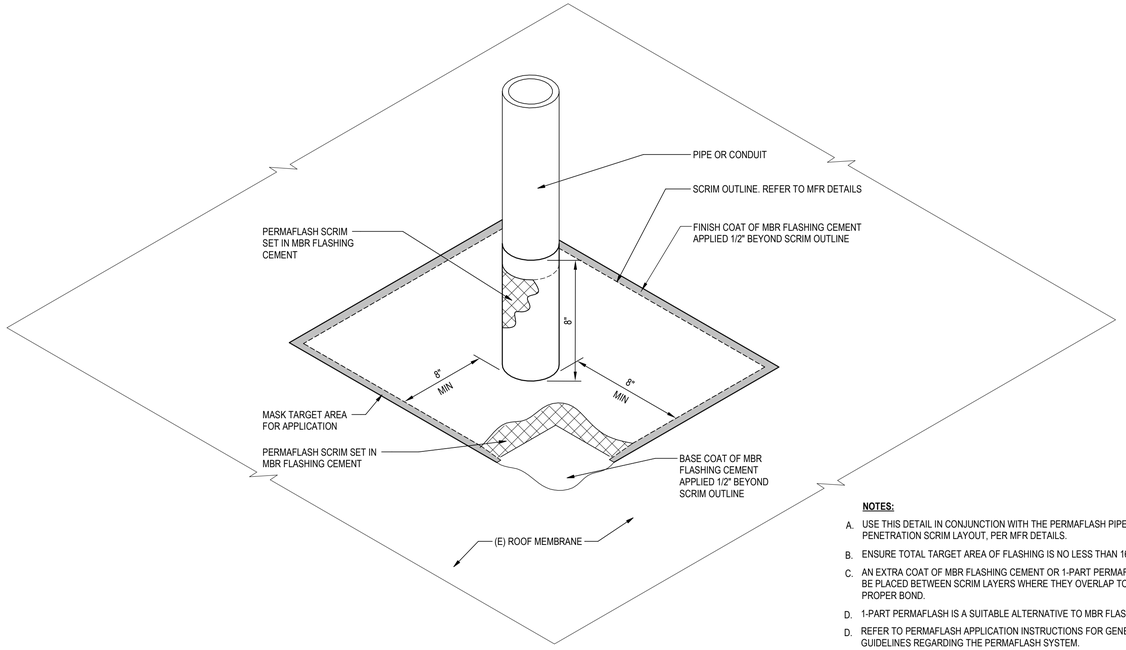

NOTES:

A. USE THIS DETAIL IN CONJUNCTION WITH THE PERMAFLASH PIPE PENETRATION SCRIM LAYOUT, PER MFR DETAILS.

B. ENSURE TOTAL TARGET AREA OF FLASHING IS NO LESS THAN 16" x 16".

C. AN EXTRA COAT OF MBR FLASHING CEMENT OR 1-PART PERMAFLASH MUST BE PLACED BETWEEN SCRIM LAYERS WHERE THEY OVERLAP TO ENSURE A PROPER BOND.

D. 1-PART PERMAFLASH IS A SUITABLE ALTERNATIVE TO MBR FLASHING CEMENT.

D. REFER TO PERMAFLASH APPLICATION INSTRUCTIONS FOR GENERAL GUIDELINES REGARDING THE PERMAFLASH SYSTEM.

E. AFTER THE PERMAFLASH HAS CURED OR GRANULES BROADCAST INTO THE WET CEMENT AN ADDITIONAL SURFACING OF JM COATING TO BE APPLIED.

5 A-500 PIPE/ CONDUIT PENETRATION @ ROOF TYPE 1 & 3

1 1/2" = 1'-0"

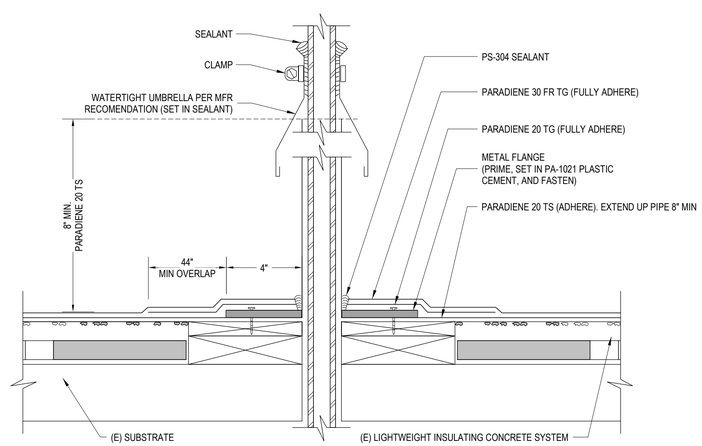

6 A-500 PIPE/ CONDUIT PENETRATION @ ROOF TYPE 2

3" = 1'-0"

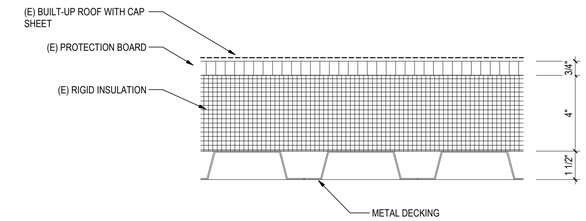

1 A-500 ROOF TYPE 1

3" = 1'-0"

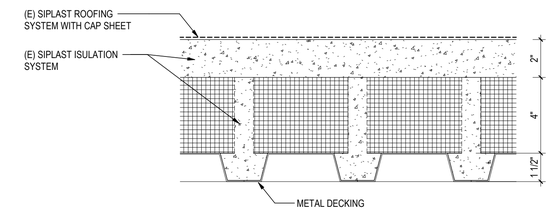

2 A-500 ROOF TYPE 2

3" = 1'-0"

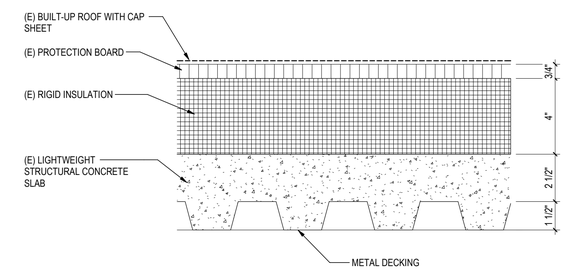

3 A-500 ROOF TYPE 3

3" = 1'-0"

Stantec
801 S. Figueroa Street, Suite 300
Los Angeles, CA 90017

Copyright Reserved
The Contractor shall verify and be responsible for all dimensions. DO NOT scale the drawing; any errors or omissions shall be reported to Stantec without delay.
The Copyright in the design and drawing is the property of Stantec. Reproduction or use for any purpose other than that authorized by Stantec is forbidden.

REVISION	DESCRIPTION	DATE
	100% RESUBMITTAL	5/13/2024
3	100% CONSTRUCTION DRAWING SUBMITTAL	03/18/2024
2	90% UPDATED CONSTRUCTION SUBMITTAL	02/13/2024
1	90% CONSTRUCTION DRAWING SUBMITTAL	12/07/2023

REPLACEMENT OF MECHANICAL UNITS AT SANTA ANA BUS BASE
4301 W MacArthur Blvd, Santa Ana, CA 92704

DETAILS

JOB #:	
DESIGN BY:	Designer
DRAWN BY:	Author
CHECKED BY:	Checker
DATE:	
SCALE:	As indicated
SHEET:	A-500F

LICENSED ARCHITECT
PATRICK MARTIN MICHELS
No. C21617
REN. 5/31/2025
STATE OF CALIFORNIA

OCTA
ORANGE COUNTY TRANSPORTATION AUTHORITY
550 SOUTH MAIN STREET, ORANGE, CA

Autodesk Docs://2014233703_Santa_Ana_Bus/arch_2014233703-Revit22.rvt
5/9/2024 10:14:26 AM

INDUSTRIAL EQUIPMENT GENERAL NOTES

1. THIS LAYOUT IS PROVIDED FOR GENERAL LOCATION OF INDUSTRIAL EQUIPMENT. UNLESS SPECIFICALLY LOCATED BY DIMENSIONS ON THE DRAWINGS, THE EQUIPMENT SHALL BE PLACED NEAR THE LOCATION ON THE DRAWINGS BUT IN THE MOST OPERATIONALLY EFFICIENT POSITION AND ORIENTATION. COORDINATE WORK WITH ARCHITECTURAL FEATURES TO AVOID INTERFERENCE BETWEEN PIPING, EQUIPMENT, MECHANICAL WORK, AND BUILDING STRUCTURE.
2. INDUSTRIAL EQUIPMENT AND COMPONENTS SHOWN ON THESE DRAWINGS ARE BASED ON A SPECIFIED MANUFACTURER OR STANDARD OF MATERIAL AND FABRICATION. ANY MODIFICATION AND/OR SUBSTITUTION OF SAID EQUIPMENT OR COMPONENT IS SUBJECT TO COMPLETE COORDINATION BY THE CONTRACTOR OF CONNECTION SERVICES, OPENING SIZE, AND ANY OTHER CONSTRUCTION-RELATED REQUIREMENTS.
3. CONTRACTOR SHALL BE RESPONSIBLE FOR COORDINATING WITH THE ROOFTOP CYCLONE UNIT MANUFACTURER TO ASSURE THAT ALL DUCTWORK AND LOCATION OF ALL COMPONENTS ARE IDENTIFIED AND PROVISIONS MADE FOR ALL UTILITY REQUIREMENTS TO ASSURE PROPER INSTALLATION.
4. CONTRACTOR SHALL TEST OPERATION OF EXISTING INDUSTRIAL EQUIPMENT WITH OWNER PRESENT PRIOR TO REMOVAL AND AFTER IT IS INSTALLED. EXISTING EQUIPMENT SHALL OPERATE IN THE SAME OR BETTER CONDITION AS PREVIOUSLY INSTALLED. COORDINATE SCHEDULE OF REMOVAL WITH OWNER.
5. VERIFY AND COORDINATE STRUCTURAL, MECHANICAL, ELECTRICAL, AND PLUMBING REQUIREMENTS OF EQUIPMENT WITH MANUFACTURER'S APPROVED SHOP DRAWINGS PRIOR TO INSTALLATION.
6. IN AREAS OF WORK, CONTRACTOR SHALL BE RESPONSIBLE FOR PROTECTION OF NEARBY EXISTING EQUIPMENT, INCLUDING FUELING EQUIPMENT, DUCTWORK, FLUID PIPING, AND FLUID OVERHEAD REELS DURING CONSTRUCTION.
7. INSTALLATION OF ROOFTOP CYCLONE UNIT REPLACEMENT SHALL BE IN PHASES. MINIMUM TWO CYCLONE VACUUMS IN SERVICE WHILE REPLACING OTHERS. CONTRACTOR TO COORDINATE WITH OCTA REPRESENTATIVE ON VACUUM SYSTEM REPLACEMENT PHASES AND DOWN TIME.
8. OUTLINES OF VEHICLES AND BUSES ARE INTENDED FOR REFERENCE ONLY WITH LOCATIONS OF INDUSTRIAL EQUIPMENT.
9. CONTRACTOR TO COORDINATE WITH OCTA REPRESENTATIVE ON ANY CHANGE IN LOCATION OF EQUIPMENT PRIOR TO RUNNING ANY UTILITIES. OCTA TO PROVIDE THE CONTRACTOR WITH POSSIBLE EQUIPMENT RELOCATION PRIOR TO THE CONTRACTOR BEGINNING WORK. ANY RELOCATIONS IDENTIFIED BY OCTA PRIOR TO CONTRACTOR COMMENCING WORK WILL BE DONE AT NO ADDITIONAL COST TO THE OWNER.

SYMBOLS

- ℄ CENTERLINE
- (#) KEYNOTE NUMBER
- ELEVATION
- BREAKLINE
- XX## EQUIPMENT TAG
- EXISTING EQUIPMENT
- REPAIR/UPDATE EQUIPMENT

Stantec
801 S. Figueroa Street, Suite 300
Los Angeles, CA 90017

Copyright Reserved
The contractor shall verify and be responsible for all dimensions. DO NOT scale the drawing - any discrepancies shall be reported to Stantec without delay.
This drawing is the property of Stantec and shall not be reproduced or used for other purposes by any other person than that authorized by Stantec in writing.

REVISION	DESCRIPTION	DATE
3	100% RESUBMITTAL	05/13/2024
2	90% UPDATED CONSTRUCTION SUBMITTAL	02/13/2024
1	90% CONSTRUCTION DRAWING SUBMITTAL	12/07/2023

REPLACEMENT OF MECHANICAL UNITS AT SANTA ANA BUS BASE
4301 W. MAC ARTHUR BLVD., SANTA ANA, CA

INDUSTRIAL EQUIPMENT - GENERAL NOTES

JOB #:	
DESIGN BY:	YK
DRAWN BY:	YK
CHECKED BY:	JW
DATE:	05/13/2024
SCALE:	As Indicated
SHEET:	Q-001F

OCTA
ORANGE COUNTY TRANSPORTATION AUTHORITY
550 SOUTH MAIN STREET, ORANGE, CA

Autodesk Docs://2014233703_Santa_Ana_Bus/Indust_SantaAnaBus_2014233703.rvt
5/8/2024 3:16:31 PM

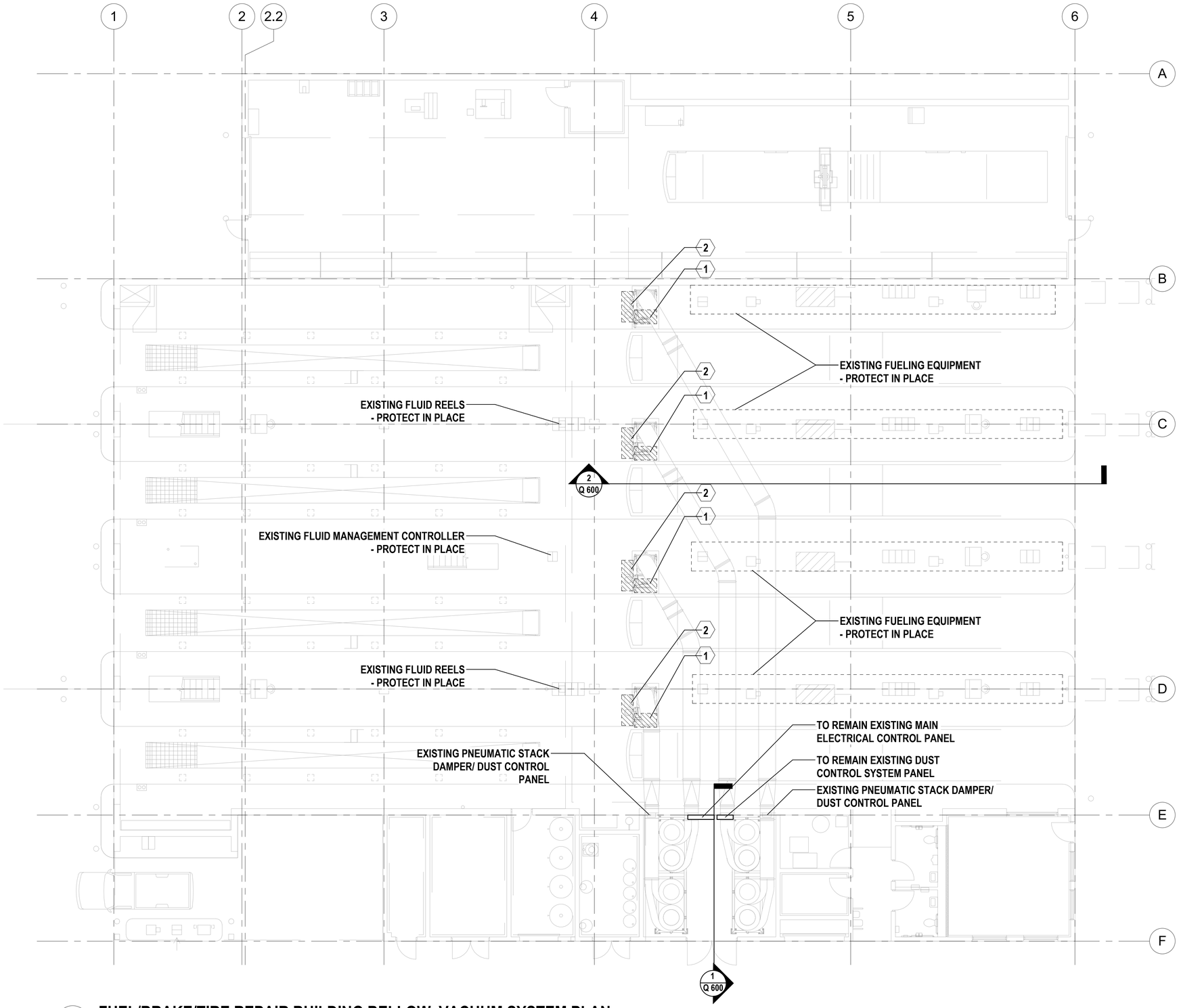

1 Q-101 **FUEL/BRAKE/TIRE REPAIR BUILDING BELLOW VACUUM SYSTEM PLAN**

1/8" = 1'-0"

INDUSTRIAL EQUIPMENT GENERAL NOTES

1. THIS LAYOUT IS PROVIDED FOR GENERAL LOCATION OF INDUSTRIAL EQUIPMENT. UNLESS SPECIFICALLY LOCATED BY DIMENSIONS ON THE DRAWINGS, THE EQUIPMENT SHALL BE PLACED NEAR THE LOCATION ON THE DRAWINGS BUT IN THE MOST OPERATIONALLY EFFICIENT POSITION AND ORIENTATION. COORDINATE WORK WITH ARCHITECTURAL FEATURES TO AVOID INTERFERENCE BETWEEN PIPING, EQUIPMENT, MECHANICAL WORK, AND BUILDING STRUCTURE.
2. INDUSTRIAL EQUIPMENT AND COMPONENTS SHOWN ON THESE DRAWINGS ARE BASED ON A SPECIFIED MANUFACTURER OR STANDARD OF MATERIAL AND FABRICATION. ANY MODIFICATION AND/OR SUBSTITUTION OF SAID EQUIPMENT OR COMPONENT IS SUBJECT TO COMPLETE COORDINATION BY THE CONTRACTOR OF CONNECTION SERVICES, OPENING SIZE, AND ANY OTHER CONSTRUCTION-RELATED REQUIREMENTS.
3. CONTRACTOR SHALL BE RESPONSIBLE FOR COORDINATING WITH THE ROOFTOP CYCLONE UNIT MANUFACTURER TO ASSURE THAT ALL DUCTWORK AND LOCATION OF ALL COMPONENTS ARE IDENTIFIED AND PROVISIONS MADE FOR ALL UTILITY REQUIREMENTS TO ASSURE PROPER INSTALLATION.
4. CONTRACTOR SHALL TEST OPERATION OF EXISTING INDUSTRIAL EQUIPMENT WITH OWNER PRESENT PRIOR TO REMOVAL AND AFTER IT IS INSTALLED, EXISTING EQUIPMENT SHALL OPERATE IN THE SAME OR BETTER CONDITION AS PREVIOUSLY INSTALLED. COORDINATE SCHEDULE OF REMOVAL WITH OWNER.
5. VERIFY AND COORDINATE STRUCTURAL, MECHANICAL, ELECTRICAL, AND PLUMBING REQUIREMENTS OF EQUIPMENT WITH MANUFACTURER'S APPROVED SHOP DRAWINGS PRIOR TO INSTALLATION.
6. IN AREAS OF WORK, CONTRACTOR SHALL BE RESPONSIBLE FOR PROTECTION OF NEARBY EXISTING EQUIPMENT, INCLUDING FUELING EQUIPMENT, DUCTWORK, FLUID PIPING, AND FLUID OVERHEAD REELS DURING CONSTRUCTION.
7. INSTALLATION OF ROOFTOP CYCLONE UNIT REPLACEMENT SHALL BE IN PHASES. MINIMUM TWO CYCLONE VACUUMS IN SERVICE WHILE REPLACING OTHERS. CONTRACTOR TO COORDINATE WITH OCTA REPRESENTATIVE ON VACUUM SYSTEM REPLACEMENT PHASES AND DOWN TIME.
8. OUTLINES OF VEHICLES AND BUSES ARE INTENDED FOR REFERENCE ONLY WITH LOCATIONS OF INDUSTRIAL EQUIPMENT.
9. CONTRACTOR TO COORDINATE WITH OCTA REPRESENTATIVE ON ANY CHANGE IN LOCATION OF EQUIPMENT PRIOR TO RUNNING ANY UTILITIES. OCTA TO PROVIDE THE CONTRACTOR WITH POSSIBLE EQUIPMENT RELOCATION PRIOR TO THE CONTRACTOR BEGINNING WORK. ANY RELOCATIONS IDENTIFIED BY OCTA PRIOR TO CONTRACTOR COMMENCING WORK WILL BE DONE AT NO ADDITIONAL COST TO THE OWNER.

KEYNOTE LEGEND

1. RE-BUILD AND UPDATE BELLOWS AND AIR CYLINDERS. REFERENCE DETAIL 2/Q600.
2. RE-BUILD PNEUMATIC PANEL. PROVIDE TUBING PROTECTION BETWEEN THE PNEUMATIC PANEL AND BELLOWS. REFERENCE DETAIL 2/Q600.
3. REMOVE AND REPLACE ROOFTOP CYCLONES WITH DAMPERS AND INNER STACK OBSTRUCTIONS IN KIND, ATTACH WITH FASTENERS AND SPACING TO MATCH EXISTING CONDITIONS AND EQUIPMENT MANUFACTURER'S RECOMMENDATIONS..
4. REPLACE VARIABLE FREQUENCY DRIVERS.
5. REMOVE EXISTING PLYWOOD BOARD AND PROVIDE (2) NEW DISCHARGE BLOWERS WITH DAMPERS AND INNER STACK OBSTRUCTION AND (2) VARIABLE FREQUENCY DRIVES WITH RELATED DRIVE ACCESSORIES.

Stantec
801 S. Figueroa Street, Suite 300
Los Angeles, CA 90017

Copyright Reserved
The contractor shall verify and be responsible for all dimensions. DO NOT scale the drawing; any errors or omissions shall be reported to Stantec without delay.
This drawing is the property of Stantec and shall not be reproduced or used for other purposes. Reproduction or use for any purpose other than that authorized by Stantec is prohibited.

REVISION	DESCRIPTION	DATE
3	100% RESUBMITTAL	05/13/2024
2	90% UPDATED CONSTRUCTION SUBMITTAL	02/13/2024
1	90% CONSTRUCTION DRAWING SUBMITTAL	12/07/2023

REPLACEMENT OF MECHANICAL UNITS AT SANTA ANA BUS BASE
4301 W. MAC ARTHUR BLVD., SANTA ANA, CA

FUEL/BRAKE/TIRE REPAIR BUILDING - FLOOR PLAN

JOB #:	
DESIGN BY:	YK
DRAWN BY:	YK
CHECKED BY:	JW
DATE:	05/13/2024
SCALE:	1/8" = 1'-0"
SHEET:	Q-101F

OCTA
ORANGE COUNTY
TRANSPORTATION AUTHORITY
550 SOUTH MAIN STREET, ORANGE, CA

Autodesk Docs://2014233703_Santa_Ana_Bus/Indust_SantaAnaBus_2014233703.rvt

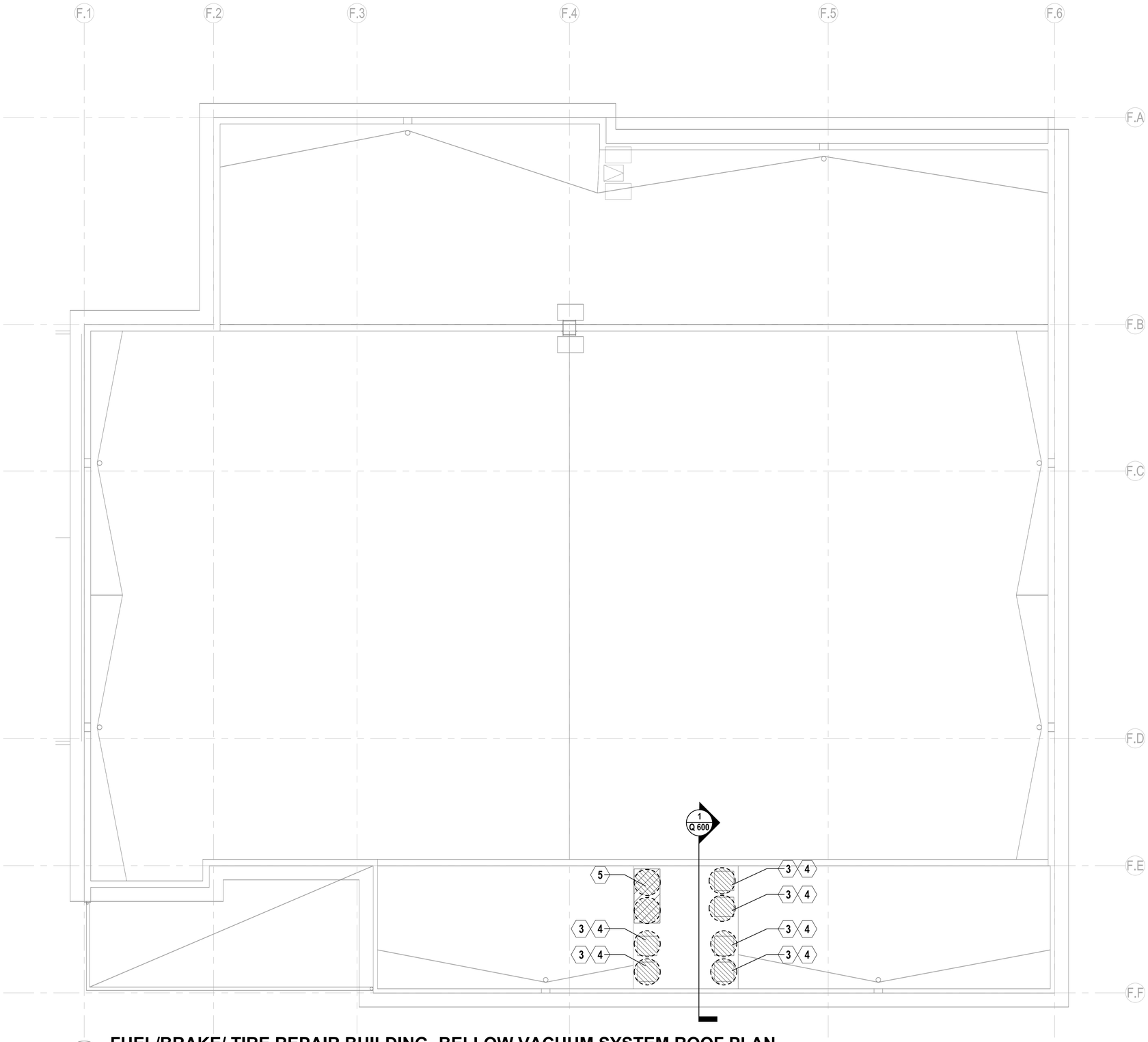

1 Q-102 **FUEL/BRAKE/ TIRE REPAIR BUILDING -BELLOW VACUUM SYSTEM ROOF PLAN**

1/8" = 1'-0"

INDUSTRIAL EQUIPMENT GENERAL NOTES

1. THIS LAYOUT IS PROVIDED FOR GENERAL LOCATION OF INDUSTRIAL EQUIPMENT. UNLESS SPECIFICALLY LOCATED BY DIMENSIONS ON THE DRAWINGS, THE EQUIPMENT SHALL BE PLACED NEAR THE LOCATION ON THE DRAWINGS BUT IN THE MOST OPERATIONALLY EFFICIENT POSITION AND ORIENTATION. COORDINATE WORK WITH ARCHITECTURAL FEATURES TO AVOID INTERFERENCE BETWEEN PIPING, EQUIPMENT, MECHANICAL WORK, AND BUILDING STRUCTURE.
2. INDUSTRIAL EQUIPMENT AND COMPONENTS SHOWN ON THESE DRAWINGS ARE BASED ON A SPECIFIED MANUFACTURER OR STANDARD OF MATERIAL AND FABRICATION. ANY MODIFICATION AND/OR SUBSTITUTION OF SAID EQUIPMENT OR COMPONENT IS SUBJECT TO COMPLETE COORDINATION BY THE CONTRACTOR OF CONNECTION SERVICES, OPENING SIZE, AND ANY OTHER CONSTRUCTION-RELATED REQUIREMENTS.
3. CONTRACTOR SHALL BE RESPONSIBLE FOR COORDINATING WITH THE ROOFTOP CYCLONE UNIT MANUFACTURER TO ASSURE THAT ALL DUCTWORK AND LOCATION OF ALL COMPONENTS ARE IDENTIFIED AND PROVISIONS MADE FOR ALL UTILITY REQUIREMENTS TO ASSURE PROPER INSTALLATION.
4. CONTRACTOR SHALL TEST OPERATION OF EXISTING INDUSTRIAL EQUIPMENT WITH OWNER PRESENT PRIOR TO REMOVAL AND AFTER IT IS INSTALLED, EXISTING EQUIPMENT SHALL OPERATE IN THE SAME OR BETTER CONDITION AS PREVIOUSLY INSTALLED. COORDINATE SCHEDULE OF REMOVAL WITH OWNER.
5. VERIFY AND COORDINATE STRUCTURAL, MECHANICAL, ELECTRICAL, AND PLUMBING REQUIREMENTS OF EQUIPMENT WITH MANUFACTURER'S APPROVED SHOP DRAWINGS PRIOR TO INSTALLATION.
6. IN AREAS OF WORK, CONTRACTOR SHALL BE RESPONSIBLE FOR PROTECTION OF NEARBY EXISTING EQUIPMENT, INCLUDING FUELING EQUIPMENT, DUCTWORK, FLUID PIPING, AND FLUID OVERHEAD REELS DURING CONSTRUCTION.
7. INSTALLATION OF ROOFTOP CYCLONE UNIT REPLACEMENT SHALL BE IN PHASES. MINIMUM TWO CYCLONE VACUUMS IN SERVICE WHILE REPLACING OTHERS. CONTRACTOR TO COORDINATE WITH OCTA REPRESENTATIVE ON VACUUM SYSTEM REPLACEMENT PHASES AND DOWN TIME.
8. OUTLINES OF VEHICLES AND BUSES ARE INTENDED FOR REFERENCE ONLY WITH LOCATIONS OF INDUSTRIAL EQUIPMENT.
9. CONTRACTOR TO COORDINATE WITH OCTA REPRESENTATIVE ON ANY CHANGE IN LOCATION OF EQUIPMENT PRIOR TO RUNNING ANY UTILITIES. OCTA TO PROVIDE THE CONTRACTOR WITH POSSIBLE EQUIPMENT RELOCATION PRIOR TO THE CONTRACTOR BEGINNING WORK. ANY RELOCATIONS IDENTIFIED BY OCTA PRIOR TO CONTRACTOR COMMENCING WORK WILL BE DONE AT NO ADDITIONAL COST TO THE OWNER.

KEYNOTE LEGEND

1. RE-BUILD AND UPDATE BELLOWS AND AIR CYLINDERS. REFERENCE DETAIL 2/Q600.
2. RE-BUILD PNEUMATIC PANEL. PROVIDE TUBING PROTECTION BETWEEN THE PNEUMATIC PANEL AND BELLOWS. REFERENCE DETAIL 2/Q600.
3. REMOVE AND REPLACE ROOFTOP CYCLONES WITH DAMPERS AND INNER STACK OBSTRUCTIONS IN KIND, ATTACH WITH FASTENERS AND SPACING TO MATCH EXISTING CONDITIONS AND EQUIPMENT MANUFACTURER'S RECOMMENDATIONS..
4. REPLACE VARIABLE FREQUENCY DRIVERS.
5. REMOVE EXISTING PLYWOOD BOARD AND PROVIDE (2) NEW DISCHARGE BLOWERS WITH DAMPERS AND INNER STACK OBSTRUCTION AND (2) VARIABLE FREQUENCY DRIVES WITH RELATED DRIVE ACCESSORIES.

Stantec
801 S. Figueroa Street, Suite 300
Los Angeles, CA 90017

Copyright Reserved
The contractor shall verify and be responsible for all dimensions. DO NOT scale the drawing - any errors or omissions shall be reported to Stantec without delay.
This drawing is the property of Stantec and shall not be reproduced by Stantec. Reproduction or use for any purpose other than that authorized by Stantec is forbidden.

REVISION	DESCRIPTION	DATE
3	100% RESUBMITTAL	05/13/2024
2	90% UPDATED CONSTRUCTION SUBMITTAL	02/13/2024
1	90% CONSTRUCTION DRAWING SUBMITTAL	12/07/2023

REPLACEMENT OF MECHANICAL UNITS AT SANTA ANA BUS BASE
4301 W. MAC ARTHUR BLVD., SANTA ANA, CA

FUEL/BRAKE/TIRE REPAIR BUILDING - ROOF PLAN

JOB #:	
DESIGN BY:	YK
DRAWN BY:	YK
CHECKED BY:	JW
DATE:	05/13/2024
SCALE:	1/8" = 1'-0"
SHEET:	Q-102F

OCTA
ORANGE COUNTY TRANSPORTATION AUTHORITY
550 SOUTH MAIN STREET, ORANGE, CA

Autodesk Docs://2014233703_Santa_Ana_Bus/Indust_SantaAnaBus_2014233703.rvt
5/8/2024 3:16:32 PM

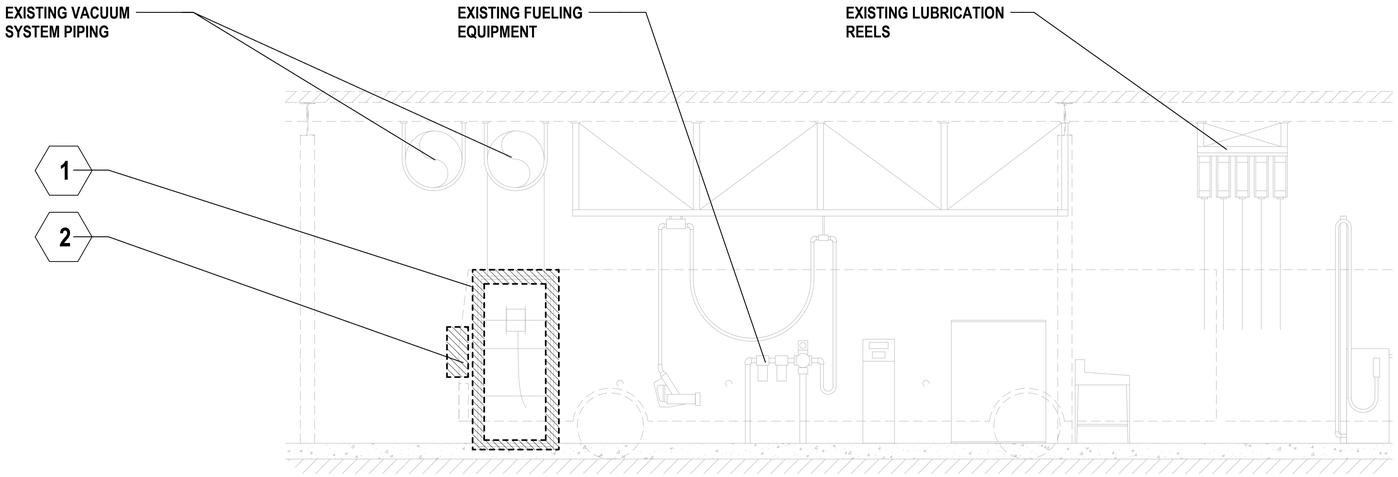

2 / Q 600 **FUEL/SERVICE LANE ELEVATION**
1/4" = 1'-0"

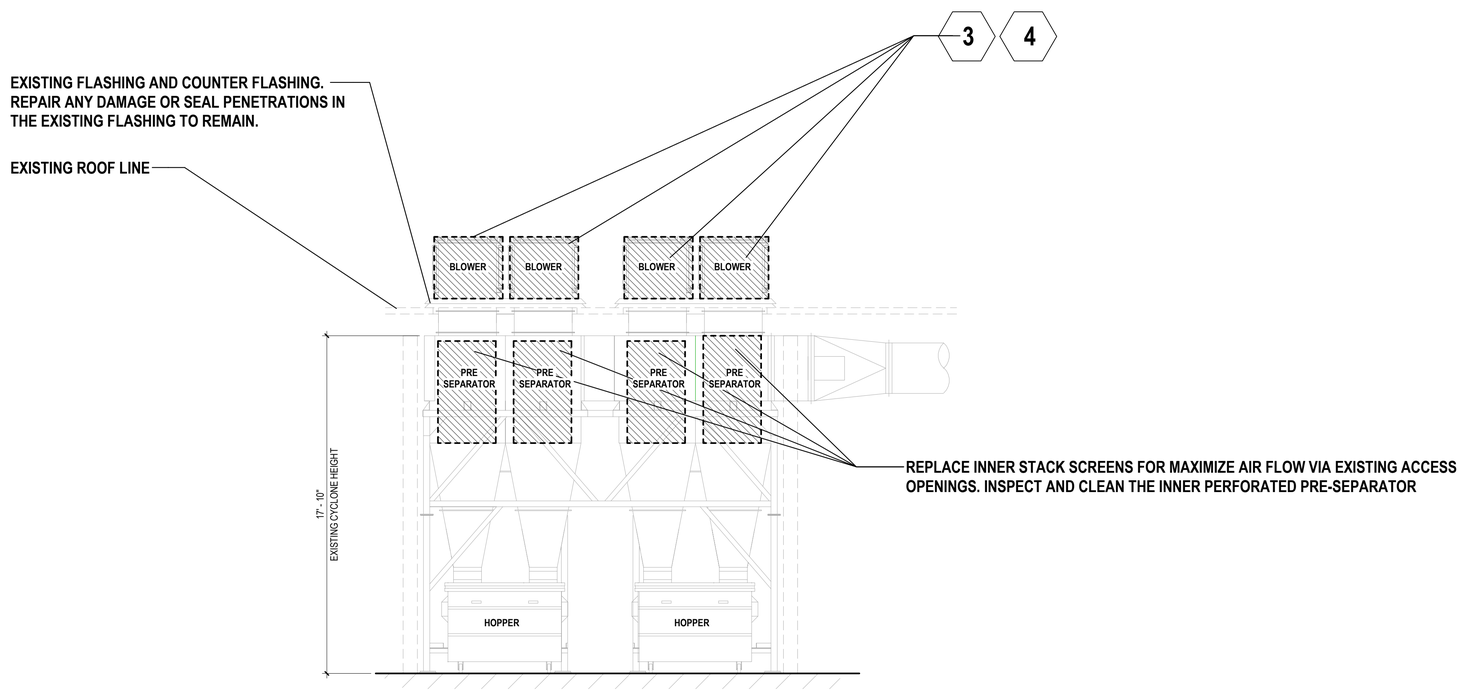

1 / Q 600 **BELLOW VACUUM ELEVATION**
1/4" = 1'-0"

INDUSTRIAL EQUIPMENT GENERAL NOTES

1. THIS LAYOUT IS PROVIDED FOR GENERAL LOCATION OF INDUSTRIAL EQUIPMENT. UNLESS SPECIFICALLY LOCATED BY DIMENSIONS ON THE DRAWINGS, THE EQUIPMENT SHALL BE PLACED NEAR THE LOCATION ON THE DRAWINGS BUT IN THE MOST OPERATIONALLY EFFICIENT POSITION AND ORIENTATION. COORDINATE WORK WITH ARCHITECTURAL FEATURES TO AVOID INTERFERENCE BETWEEN PIPING, EQUIPMENT, MECHANICAL WORK, AND BUILDING STRUCTURE.
2. INDUSTRIAL EQUIPMENT AND COMPONENTS SHOWN ON THESE DRAWINGS ARE BASED ON A SPECIFIED MANUFACTURER OR STANDARD OF MATERIAL AND FABRICATION. ANY MODIFICATION AND/OR SUBSTITUTION OF SAID EQUIPMENT OR COMPONENT IS SUBJECT TO COMPLETE COORDINATION BY THE CONTRACTOR OF CONNECTION SERVICES, OPENING SIZE, AND ANY OTHER CONSTRUCTION-RELATED REQUIREMENTS.
3. CONTRACTOR SHALL BE RESPONSIBLE FOR COORDINATING WITH THE ROOFTOP CYCLONE UNIT MANUFACTURER TO ASSURE THAT ALL DUCTWORK AND LOCATION OF ALL COMPONENTS ARE IDENTIFIED AND PROVISIONS MADE FOR ALL UTILITY REQUIREMENTS TO ASSURE PROPER INSTALLATION.
4. CONTRACTOR SHALL TEST OPERATION OF EXISTING INDUSTRIAL EQUIPMENT WITH OWNER PRESENT PRIOR TO REMOVAL AND AFTER IT IS INSTALLED, EXISTING EQUIPMENT SHALL OPERATE IN THE SAME OR BETTER CONDITION AS PREVIOUSLY INSTALLED. COORDINATE SCHEDULE OF REMOVAL WITH OWNER.
5. VERIFY AND COORDINATE STRUCTURAL, MECHANICAL, ELECTRICAL, AND PLUMBING REQUIREMENTS OF EQUIPMENT WITH MANUFACTURER'S APPROVED SHOP DRAWINGS PRIOR TO INSTALLATION.
6. IN AREAS OF WORK, CONTRACTOR SHALL BE RESPONSIBLE FOR PROTECTION OF NEARBY EXISTING EQUIPMENT, INCLUDING FUELING EQUIPMENT, DUCTWORK, FLUID PIPING, AND FLUID OVERHEAD REELS DURING CONSTRUCTION.
7. INSTALLATION OF ROOFTOP CYCLONE UNIT REPLACEMENT SHALL BE IN PHASES. MINIMUM TWO CYCLONE VACUUMS IN SERVICE WHILE REPLACING OTHERS. CONTRACTOR TO COORDINATE WITH OCTA REPRESENTATIVE ON VACUUM SYSTEM REPLACEMENT PHASES AND DOWN TIME.
8. OUTLINES OF VEHICLES AND BUSES ARE INTENDED FOR REFERENCE ONLY WITH LOCATIONS OF INDUSTRIAL EQUIPMENT.
9. CONTRACTOR TO COORDINATE WITH OCTA REPRESENTATIVE ON ANY CHANGE IN LOCATION OF EQUIPMENT PRIOR TO RUNNING ANY UTILITIES. OCTA TO PROVIDE THE CONTRACTOR WITH POSSIBLE EQUIPMENT RELOCATION PRIOR TO THE CONTRACTOR BEGINNING WORK. ANY RELOCATIONS IDENTIFIED BY OCTA PRIOR TO CONTRACTOR COMMENCING WORK WILL BE DONE AT NO ADDITIONAL COST TO THE OWNER.

KEYNOTE LEGEND

1. RE-BUILD AND UPDATE BELLOWS AND AIR CYLINDERS. REFERENCE DETAIL 2/Q600.
2. RE-BUILD PNEUMATIC PANEL. PROVIDE TUBING PROTECTION BETWEEN THE PNEUMATIC PANEL AND BELLOWS. REFERENCE DETAIL 2/Q600.
3. REMOVE AND REPLACE ROOFTOP CYCLONES WITH DAMPERS AND INNER STACK OBSTRUCTIONS IN KIND, ATTACH WITH FASTENERS AND SPACING TO MATCH EXISTING CONDITIONS AND EQUIPMENT MANUFACTURER'S RECOMMENDATIONS..
4. REPLACE VARIABLE FREQUENCY DRIVERS.
5. REMOVE EXISTING PLYWOOD BOARD AND PROVIDE (2) NEW DISCHARGE BLOWERS WITH DAMPERS AND INNER STACK OBSTRUCTION AND (2) VARIABLE FREQUENCY DRIVES WITH RELATED DRIVE ACCESSORIES.

Stantec
801 S. Figueroa Street, Suite 300
Los Angeles, CA 90017

Copyright Reserved
The contractor shall verify and be responsible for all dimensions. DO NOT scale the drawing; any errors or omissions shall be reported to Stantec without delay.
This drawing and design is the property of Stantec and may not be used, reproduced or copied for any purpose other than that authorized by Stantec in writing.

REVISION	DESCRIPTION	DATE
3	100% RESUBMITTAL	05/13/2024
2	90% UPDATED CONSTRUCTION SUBMITTAL	02/13/2024
1	90% CONSTRUCTION DRAWING SUBMITTAL	12/07/2023

REPLACEMENT OF MECHANICAL UNITS AT SANTA ANA BUS BASE
4301 W. MAC ARTHUR BLVD., SANTA ANA, CA

INDUSTRIAL EQUIPMENT - DETAILS

JOB #:	
DESIGN BY:	Designer
DRAWN BY:	Author
CHECKED BY:	Checker
DATE:	05/13/2024
SCALE:	As indicated
SHEET:	Q-600F

OCTA
ORANGE COUNTY TRANSPORTATION AUTHORITY
550 SOUTH MAIN STREET, ORANGE, CA

Autodesk Docs://2014233703_Santa_Ana_Bus/Indust_SantaAnaBus_2014233703.rvt

(HVAC)

*NOTE: ALL DUCT SIZES ARE INTERIOR, FREE DIMENSIONS ALWAYS WIDTH (HORIZONTAL DIM.) x HEIGHT (VERTICAL DIM.)

Symbol	Description
	AIR FLOW ARROW
18"x12" — 18"x12"	RECTANGULAR DUCT AND SIZE*
18"ø — 18"ø	ROUND DUCT AND SIZE*
18"x12"ø — 18"x12"ø	FLAT OVAL DUCT AND SIZE*
18"x12"	EXTERIOR DUCT TREATMENT*
18"x12" — 18"x12"	RECTANGULAR DUCT WITH ACOUSTIC LINING*
30"x12"	DUCT SECTION, SUPPLY AIR. APPLIES TO RECT., ROUND AND OVAL
	DUCT SECTION, OUTSIDE AIR. APPLIES TO RECT., ROUND AND OVAL
	DUCT SECTION, RETURN AIR. APPLIES TO RECT., ROUND AND OVAL
	DUCT SECTION, EXHAUST AIR. APPLIES TO RECT., ROUND AND OVAL
	FLEXIBLE DUCT
	ELBOW TURN, SUPPLY DOWN. APPLIES TO RECT., ROUND AND OVAL
	DUCT SECTION, OUTSIDE AIR. APPLIES TO RECT., ROUND AND OVAL
	DUCT SECTION, OUTSIDE AIR. APPLIES TO RECT., ROUND AND OVAL
	DUCT SECTION, OUTSIDE AIR. APPLIES TO RECT., ROUND AND OVAL
UP	CHANGE IN DUCT ELEVATION RISING IN DIRECTION INDICATED
DN	CHANGE IN DUCT ELEVATION DROPPING IN DIRECTION INDICATED
	END CAP
	ELBOW, RECTANGULAR, SMOOTH RADIUS WITH SPLITTER VANES (0.25 R/W DEFAULT)
	ELBOW, RECTANGULAR, SMOOTH RADIUS WITHOUT VANES (1.5 R/W DEFAULT)
	ELBOW, ROUND, SMOOTH RADIUS (1.5 R/W DEFAULT)
	MITERED ELBOW, RECTANGULAR, WITHOUT VANES
	MITERED ELBOW, RECTANGULAR, WITH TURNING VANES
	RECTANGULAR TO ROUND TRANSITION
	DUCT ACCESS DOOR (TOP, SIDE, BOTTOM)
	FLEXIBLE CONNECTION
BDD	BACKDRAFT DAMPER
COD	CABLE OPERATED DAMPER
	MANUAL DAMPER
M	MOTORIZED DAMPER
CAR	PRESSURE INDEPENDENT REGULATOR
	FIRE DAMPER
	SMOKE DAMPER
	SMOKE AND FIRE DAMPER
	DUCT SILENCER/TRANSFER ELBOW
T	CONTROL DEVICE (REFER TO CONTROLS LEGEND)
	AIR FLOW MEASURING STATION (REFER TO CONTROLS LEGEND)
QUANTITY / TYPE / SIZE (IN.) / VOLUME (CFM)	AIR OUTLET OR INLET TAG)REFER TO SCHEDULE)
	RECTANGULAR DIFFUSER, SUPPLY. OPTIONAL ARROWS SHOW THE FLOW DIRECTION.
	RECTANGULAR REGISTER OR GRILLE, RETURN
	RECTANGULAR REGISTER OR GRILLE, EXHAUST
	ROUND DIFFUSER, SUPPLY
	LINEAR DIFFUSER
	SIDEWALL REGISTER OR GRILLE, SUPPLY
	SIDEWALL GRILLE, RETURN OR EXHAUST
UC	UNDERCUT DOOR
	DOOR GRILLE OR LOUVER
	TRANSFER GRILLE OR LOUVER
	COIL (REFER TO CONTROLS LEGEND)
QUANTITY / TYPE / LENGTH (FT.) / CAPACITY (MBH)	RADIATION HEATING TAG (REFER TO SCHEDULE)

NOTE: NOT ALL SYMBOLS, SYSTEMS, AND ABBREVIATIONS MAY BE USED ON THIS PROJECT

(HVAC)

- EXHAUST FAN
- SUPPLY FAN
- EXHAUST FAN
- ROOFTOP UNIT
- MAKEUP AIR UNIT
- PACKAGED AIR CONDITIONER
- PACKAGED HEAT PUMP

WORK DEFINITION

- NEW WORK (N)
- EXISTING (E)
- REMOVE EXISTING (D)
- ### KEY NOTE
- ### EQUIPMENT IDENTIFICATION
- CONNECTION TO EXISTING
- DISCONNECT (CUT AND CAP)
- POINT OF DEMOLITION

ABBREVIATIONS

A/C	AIR CONDITIONING UNIT
AAV	AUTOMATIC AIR VENT
ADA	AMERICANS WITH DISABILITIES ACT
ADJ	ADJUSTABLE
AFC	ABOVE FINISHED CEILING
AFF	ABOVE FINISHED FLOOR
AFG	ABOVE FINISHED GRADE
AFR	ABOVE FINISH ROOF
AHJ	AUTHORITY HAVING JURISDICTION
AP	ACCESS PANEL
APD	AIR PRESSURE DROP
AVG	AVERGAGE
BAS	BUILDING AUTOMATION SYSTEM
BDD	BACKDRAFT DAMPER
BHP	BRAKE HORSEPOWER
BMS	BUILDING MANAGEMENT SYSTEM
BOD	BOTTOM OF DUCT
BOP	BOTTOM OF PIPE
BTU	BRITISH THERMAL UNIT
BTUH	BRITISH THERMAL UNIT PER HOUR
C/W	COMPLETE WITH
CAV	CONSTANT AIR VOLUME
CBV	CIRCUIT BALANCING VALVE
CFM	CUBIC FEET PER MINUTE
DB	DRY BULB TEMEPRATURE
dB	DECIBEL(S)
dBA	A-WEIGHTED DECIBLES
DDC	DIRECT DIGITAL CONTROL
DEG	DEGREE
DIA./Ø	DIAMETER
DIFF	DIFFERENTIAL
DIV	DIVISION
DN	DOWN
DWG	DRAWING
EA	EXHAUST AIR
EA (D)	EXHAUST AIR, DISHWASH
EA (G)	EXHAUST AIR, GENERAL
EA (K)	EXHAUST AIR, KITCHEN
EA (LAB)	EXHAUST AIR, LABORATORY
EA (LD)	EXHAUST AIR, LAUNDRY/DRYER
EA (W)	EXHAUST AIR, WASHROOM
EAT	ENTERING AIR TEMPERATURE
EAV	EXHAUST AIR VALVE
ECM	ELECTRONICALLY COMMUNICATED MOTOR
ED	EXISTING TO BE DEMOLISHED (DEMOLITION PLANS)
EER	ENERGY EFFICIENCY RATIO
EG	ETHELYENE GLYCOL
EMCS	ENERGY MANAGMENT CONTROL SYSTEM
ER	EXISTING RELOCATED (NEW CONSTRUCTION PLANS)
ERL	EXISTING TO BE RELOCATED (DEMOLITION PLANS)
ESP	EXTERNAL STATIC PRESSURE
EWT	ENTERING WATER TEMPERATURE
EXIST / E	EXISTING (DEMOLITION PLANS)
FC	FAIL CLOSED
FLA	FULL LOAD AMPERAGE
FO	FAIL OPEN
FP	FIRE PROTECTION
FPM	FEET PER MINUTE
FPS	FEET PER SECOND
FT	FOOT/FEET
GA	GAUGE
GAL	GALLON (US)
GC	GENERAL CONTRACTOR
GEO	GEODETIC
GPM	GALLONS PER MINUTE
HEPA	HIGH EFFICIENCY PARTICULATE AIR (FILTER)
HP	HORSEPOWER
HR	HOUR
HVAC	HEATING / VENTILATING / AIR CONDITIONING
HZ	HERTZ
IE	INVERT ELEVATION
IEER	INTEGRATED ENERGY EFFECIENCY RATIO
IN	INCHES
IN WG	INCHES WATER GAUGE
IPLV	INTEGRATED PART LOAD VALUE
kW	KILOWATT
kWh	KILOWATT HOUR
LAT	LEAVING AIR TEMPERATURE
LBS	POUNDS
LF	LINEAR FEET
LWT	LEAVING WATER TEMPERATURE
M	METER
MAX	MAXIMUM
MBH	THOUSAND OF BTUH
MCA	MINIMUM CIRCUIT AMPS
MERV	MINIMUM EFFECIENCY REPORTING VALUES
MFR	MANUFACTURER
MIN	MINIMUM
MOP	MAXIMUM OVERCURRENT PROTECTION
MWT	MEAN WATER TEMPERATURE
N/A	NOT APPLICABLE
NC	NOISE CRITERIA
NC	NORMALLY CLOSED
NIC	NOT IN CONTRACT
NO	NORMALLY OPEN
NPS	NOMINAL PIPE SIZE
NTS	NOT TO SCALE
OA	OUTSIDE AIR
OFCI	OWNER FURNISHED, CONTRACTOR INSTALLED
OFE	OWNER FURNISHED EQUIPMENT
OFOI	OWNER FURNISHED / OWNER INSTALLED
PG	PROPYLENE GLYCOL
POE	POINT OF ENTRANCE
POS	POINT OF SERVICE
PPM	PARTS PER MILLION
PSI	POUNDS PER SQUARE INCH
PSIA	POUNDS PER SQUARE INCH, ABSOLUTE
PSIG	POUNDS PER SQUARE INCH, GAGE
PTS	PNEUMATIC TUBE STATION
PVC	POLYVINYL CHLORIDE
RA	RETURN AIR
RELA	RELIEF AIR
REQD	REQUIRED
RH	RELATIVE HUMIDITY
RPM	REVOLUTIONS PER MINUTE
SA	SUPPLY AIR
SEER	SEASONAL ENERGY EFFICIENCY RATION
SP	STATIC PRESSURE
SP	STAIR PRESSURIZATION AIR (*)
SRV	SAFETY RELIEF VALVE
TA	TRANSFER AIR
TEMP	TEMPERATURE
TSP	TOTAL STATIC PRESSURE
TSTAT	THERMOSTAT
TYP	TYPICAL
UC	UNDER CUT (DOOR)
UG	UNDERGROUND
UP	UP
VAV	VARIABLE AIR VOLUME
VFD	VARIABLE FREQUENCY DRIVE
VIF	VERIFY IN FIELD
VTR	VENT-THRU-ROOF
W/	WITH
W/O	WITHOUT
WB	WET BULB TEMPERATURE
WG	WATER GAUGE
ZN-#	ZONE
°C	CELSIUS
°F	FAHRENHEIT

EQUIPMENT IDENTIFICATION

AB-#	AIR BLENDER
AC-#	AIR COMPRESSOR
ACU-#	AIR CONDITIONING UNIT
ADS-#	AIR AND DIRT SEPARATOR
AF-#	AIR FILTER
AHU-#	AIR HANDLING UNIT
AS-#	AIR SEPARATOR
ATU-#	AIR TERMINAL UNIT
B-#	BOILER
BCU-#	BLOWER COIL UNIT
BT-#	BATH TUB
CB-#	CHILLED BEAM
CC-#	COOLING COIL
CH-#	CHILLER
CONV-#	CONVECTOR
CRU-#	CONDENSATE RETURN UNIT
CT-#	COOLING TOWER
CU-#	CONDENSING UNIT
CUH-#	CABINET UNIT HEATER
CV-#	CONTROL VALVE
DAC-#	DOOR AIR CURTAIN
DC-#	DUST COLLECTOR
DCT-#	DECONTAMINATION TANK
DCVA-#	DOUBLE CHECK VALVE ASSEMBLY
DF-#	DRINKING FOUNTAIN
DG-#	DOOR GRILLE
DS-#	DUCT SILENCER
DU-#	DEHUMIDIFICATION UNIT
DWH-#	DOMESTIC WATER HEATER
E-#	EXHAUST GRILLE / REGISTER / DIFFUSER
EL-#	EXPANSION LOOP
ERC-#	ENERGY RECOVERY COIL
ERU-#	ENERGY RECOVERY UNIT
ES-#	EMERGENCY SHOWER
ETU-#	EXHAUST TERMINAL UNIT
EWC-#	ELECTRIC WATER COOLER
EWS-#	EYE WASH STATION
F(C)-#	FAN CEILING
F(E)-#	FAN EXHAUST
F(LE)-#	FAN LABORATORY EXHAUST
F(R)-#	FAN RETURN
F(S)-#	FAN SUPPLY
F(T)-#	FAN TRANSFER
F-#	FAN
FCU-#	FAN COIL UNIT
FD-#	FLOOR DRAIN
FFU-#	FAN FILTER UNIT
FPP-#	FIRE PROTECTION PUMP
FPTU-#	FAN POWERED TERMINAL UNIT
FTR-#	FINNED TUBE RADIATOR
FUR-#	FURNACE
GFS-#	GLYCOL FEED SYSTEM
GSG-#	GAS-FIRED STEAM GENERATOR(*)
H(C)-#	HOOD (CANOPY)
H(HC)-#	HOOD (HEAT AND CONDENSATE)
H(I)-#	HOOD (INTAKE)
H(K)-#	HOOD (KITCHEN)
H(R)-#	HOOD (RELIEF)
H(RH)-#	HOOD (RANGE)
H-#	HUMIDIFIER
HC-#	HEATING COIL
HP-#	HEAT PUMP
HRU-#	HEAT RECOVERY UNIT
HT-#	HYDROPNEUMATIC TANK
HX-#	HEAT EXCHANGER
LATU-#	LAB AIR TERMINAL UNIT
LAV-#	LAVATORY
MAC-#	MEDICAL AIR COMPRESSOR
MAU-#	MAKEUP AIR UNIT
MD-#	MOTORIZED DAMPER
MSK-#	MOP SINK
MV-#	MIXING VALVE
MVP-#	MEDICAL VACUUM PUMP
P-#	PUMP
PDU-#	POOL DEHUMIDIFICATION UNIT
PRV-#	PRESSURE REDUCING VALVE
PTAC-#	PACKAGED TERMINAL AIR CONDITIONER
R-#	RETURN AIR GRILLE / REGISTER / DIFFUSER
RD-#	ROOF DRAIN
RH-#	RANGE HOOD
RP-#	RADIANT PANEL
RPBP-#	REDUCED PRESSURE BACKFLOW PREVENTER
RTU-#	ROOFTOP UNIT
S-#	SUPPLY GRILLE / REGISTER / DIFFUSER
SH-#	SHOWER
SK-#	SINK
SPC-#	SOLAR PANEL COLLECTOR
SSF-#	SIDE STREAM FILTER
T(B)-#	TANK (BUFFER TANK)
T(E)-#	TANK (EXPANSION TANK)
T(H)-#	TANK (HYDRO PNEUMATIC TANK)
T(S)-#	TANK (STORAGE TANK)
T-#	TRANSFER AIR GRILLE
UH-#	UNIT HEATER
UR-#	URINAL
USG-#	UNFIRED STEAM GENERATOR
UV-#	UNIT VENTILATOR
VA-#	VALVE
VFD-#	VARIABLE FREQUENCY DRIVE
WC-#	WATER CLOSET
WS-#	WATER SOFTENER
L-#	LOUVER

LICENSED PROFESSIONAL ENGINEER SEVAK GALSTYAN M 39730 EXP. 12/31/25 MECHANICAL STATE OF CALIFORNIA

Stantec
801 S. Figueroa Street, Suite 300
Los Angeles, CA 90017

Copyright Reserved
The Contractor shall verify and be responsible for all dimensions. DO NOT scale the drawing - any errors or omissions shall be reported to Stantec without delay.
The Copyrights to all designs and drawings are the property of Stantec. Reproduction or use for any purpose other than that authorized by Stantec is forbidden.

REVISION	DESCRIPTION	DATE
	100% RESUBMITTAL	5/13/2024
	100% CONSTRUCTION DRAWING SUBMITTAL	3/27/2024
	90% UPDATED CONSTRUCTION SUBMITTAL	2/13/2024
	90% CONSTRUCTION DRAWING SUBMITTAL	12/07/2023

REPLACEMENT OF MECHANICAL UNITS AT SANTA ANA BUS BASE
4301 W. MAC ARTHUR BLVD., SANTA ANA, CA

MECHANICAL GENERAL NOTES, SYMBOLS AND ANNOTATIONS

JOB #:
DESIGN BY: SG
DRAWN BY: RW
CHECKED BY: GY
DATE:
SCALE: 12" = 1'-0"
SHEET: M-001 F

OCTA
ORANGE COUNTY TRANSPORTATION AUTHORITY
550 SOUTH MAIN STREET, ORANGE, CA

DEMO NOTES

1. NOT ALL EXISTING CONDITIONS HAVE BEEN SHOWN. CONTRACTOR TO FIELD VERIFY ALL EXISTING CONDITIONS PRIOR TO DEMO.
2. CONTRACTOR SHALL PROTECT ALL WORK AND EXISTING CONDITIONS ASSOCIATED WITH THIS CONTRACT FROM DAMAGE, COVER ENDS OF PIPING AND DUCTWORK NOT ACTIVELY BEING WORKED ON. IT IS THE CONTRACTOR RESPONSIBILITY TO REPAIR OR REPLACE ANY DAMAGED ITEMS THAT OCCURS DURING THIS CONSTRUCTION PROJECT AT NO COST TO THE OWNER.
3. REPLACE ALL REQUIRED EQUIPMENT, PIPING, HANGERS, CONTROLS AND ALL ASSOCIATED EXISTING SYSTEMS AS REQUIRED. TO REPLACE EACH SYSTEM, CONTRACTOR SHALL COORDINATE DEMOLITION WITH EXISTING SYSTEMS AND COMPONENTS TO REMAIN PRIOR TO WORK COMMENCING. EXISTING DUCTWORK IS TO REMAIN.
4. IT IS THE CONTRACTORS RESPONSIBILITY TO CLEAN UP ALL DEBRIS FROM SITE AT THE END OF EACH WORK DAY AND DISPOSE OFF EITHER IN LAY DOWN RECYCLE BINS PROVIDED BY THE CONTRACTOR OR OFFSITE ALL TOGETHER.
5. ALL DEMOLISHED EQUIPMENT SHALL BE TURNED OVER TO THE OWNER UNLESS DIRECTED OTHERWISE. IF OWNER IS NOT TO KEEP DEMOLISHED EQUIPMENT, DISPOSE AS REQUIRED.
6. THE CONTRACTOR SHALL VISIT THE SITE AND BE THOROUGHLY FAMILIARIZED WITH THE EXISTING CONDITIONS PRIOR TO BIDDING. INFORMATION GIVEN ON THESE DRAWINGS ABOUT THE EXISTING INSTALLATION HAS BEEN OBTAINED FROM THE EISTING AS-BUILT DRAWINGS BUT CANNOT BE GUARANTEED ACCURATE IN ALL RESPECTS. VERIFY ALL SUCH INFORMATION BEFORE PROCEEDING WITH ANY NEW WORK THAT MAY BE AFFECTED. INCLUDE AS PART OF THE CONTRACT AL WORK REQUIRED TO PRODUCE THE INDICATED RESULT.
7. UPON SUBMITTING A BID THE CONTRACTOR SHALL BE HELD TO HAVE MADE SUCH EXAMINATIONS OF THE SITE AND NO ALLOWANCE FOR EXTRAS WILL BE ALLOWED FOR ANY ERROR OR OVERSIGHT RESULTING FROM THE CONTRACTORS UNFAMILIARITY WITH THE SITE OR EXISTING CONDITIONS.
8. CONTRACTOR SHALL NOT SCALE DRAWINGS. DIMENSIONS MISSING FROM PLANS OR NEEDED FOR EXECUTION OF WORK SHALL BE CLARIFIED OR PROVIDED BY THE FACILITY REPRESENTATIVE BEFORE WORK IS INSTALLED.
9. INTERRUPTION OF EXISTING SERVICES: THE CONTRACTOR'S ATTENTION IS CALLED TO THE PRESENCE OF EXISTING, CONDUIT, PIPING, ETC. THE CONTRACTOR WILL BE HELD RESPONSIBLE FOR THE PROPER AND APPROVED REPAIR OF ANY AND ALL DAMAGE CAUSED BY HIM OR HIS WORK TO EXISTING BUILDING. ANY INTERRUPTIONS REQUIRED SHALL BE SCHEDULED TO MINIMIZE INCONVENIENCE TO THE FACILITY, AND AT TIMES AS APPROVED IN ADVANCE BY THE FACILITY REPRESENTATIVE. NEW WORK AND ISNTALLATIONS SHALL BOT IMPAIR THE PROPER FUNCTIONING OF THE EXISTING FACILITY. THE COMPLETED PROJECT SHALL BE A PROPERLY FUNCTIONING ENTITY THROUGHOUT. FURNISH ALL LABOR AND MATERIALS REQUIRED TO RELOCATE, REMOVE, REINSTALL, RECONNECT REPLACE, ETC. ANY EXISTING PIPING TO ACCOMMODATE THE WORK. CONTRACTOR SHOULD CONSIDER IN HIS BID ANY EXTRA WORK REQUIRED TO MINIMIZE SHUTDOWN TIME.
10. BEFORE DEMOLITION COMMENCES ON SITE, ALL EXISTING EQUIPMENT TO BE RETAINED AND REUSED WILL BE SURVEYED AND VALIDATED BY THE CONTRACTOR TO ESTABLISH CONDITION AND CAPACITIES. ANY EXISTING DAMAGE TO EQUIPMENT IS TO BE RECORDED AT THIS STAGE BY THE CONTRACTOR AND A FULL WRITTEN REPORT SUBMITED TO THE FACILITY REPRESENTATIVE FOR REVIEW. THE REPORT WILL INCLUDE PHOTOGRAPHIC EVIDENCE OF DAMAGE.
11. CONTRACTOR TO CROSS REFERENCE DEMOLITION AND NEW CONSTRUCTION DRAWINGS TO ENSURE CONSISTENCY IN DESIGN INTENT BEFORE PROCEEDING WITH ANY DEMOLITION WORK. ANY PIPE, VALVE, EQUIPMENT THAT IS MISTAKENLY DEMOLISHED SHALL BE RESTORED AT CONTRACTORS COST.
12. ALL POWER SUPPLIES TO EXISTING EQUIPMENT TO BE REMOVED SHALL BE ISOLATED AND MADE SAFE PER NEX PRIOR TO DEMOLITION STARTS. THIS PROCESS SHALL BE COORDINATED WITH FACILITY REPRESENTATIVES.
13. CONTRACTOR TO DO PRE-DEMOLITION SURVEY AND RED TAG UTILITIES FOR DEMOLITION. COORDIANTE WITH FACILITY REPRESENTATIVE ALL PROPOSED UTILITY SHUT DOWN AND ISOLATION PRIOR TO DEMOLITION.

APPLICABLE CODES AND DESIGN CONDITIONS

1. AMERICANS WITH DISABILITIES ACT (ADA).
2. NFPA 90A; STANDARD FOR THE INSTALLATION OF AIR-CONDITIONING AND VENTILATING SYSTEMS.
3. NFPA 90B: STANDARD FOR THE INSTALLATION OF WARM AIR HEATING AND AIR-CONDITIONING SYSTEMS.
4. NFPA 101: LIFE SAFETY CODE
5. ASHRAE 55 THERMAL ENVIRONMENTAL CONDITIONS FOR HUMAN OCCUPANCY.
6. ASHRAE 62.1 VENTILATION FOR ACCEPTABLE INDOOR AIR QUALITY.
8. 2022 CALIFORNIA MECHANICAL CODE
9. 2022 CALIFORNIA PLUMBING CODE
10. 2022 NATIONAL ELECTRICAL CODE
11. 2022 TITLE 24 REQUIREMENTS
12. CALGREEN STANDARDS

OUTDOOR DESIGN CONDITIONS:

LOCATION:
SUMMER: 98DB, 70WB
WINTER: 35DB
ELEVATION: 115 FEET

GENERAL NOTES

1. THE MECHANICAL PLANS ARE DIAGRAMMATIC IN NATURE AND ARE BASED ON ONE MANUFACTURER'S EQUIPMENT. THEY ARE NOT INTENDED TO SHOW EVERY ITEM IN ITS EXACT LOCATION. THE EXACT DIMENSIONS, OR ALL OF THE DETAILS FOR THE EQUIPMENT. THE MECHANICAL CONTRACTOR SHALL VERIFY THE ACTUAL DIMENSIONS OF THE EQUIPMENT AND ENSURE THAT IT WILL FIT IN THE AVAILABLE SPACE.
2. MECHANICAL CONTRACTOR RESPONSIBLE FOR INSTALLATION OF COMPLETED AND OPERATIONAL SYSTEMS WITH DUE RESPECT TO ALL APPLICABLE CODES AND AUTHORITIES HAVING JURISDICTION.
3. IT IS THE CONTRACTOR RESPONSIBILITY TO FIELD VERIFY ALL CONNECTION POINTS PRIOR TO INSTALL. NOT ALL CONNECTION SIZES ARE SHOWN, BUT THOSE THAT ARE APPROXIMATE AND TAKEN FROM EXISTING AS-BUILTS AND FIELD OBSERVATIONS.
4. COORDINATE PIPE ROUTING WITH DUCTWORK, SPRINKLER PIPING AND ELECTRICAL POWER/LIGHTING CIRCUITING AND STRUCTURAL MEMBERS PRIOR TO INSTALLATION.
5. CONTRACTORS TO VERIFY ALL GRADES, DIMENSIONS AND EXISTING CONDITIONS AT THE SITE BEFORE PROCEEDING WITH WORK. NOTIFY PRIME CONSULTANT OF ANY DISCREPANCIES BETWEEN DRAWINGS AND ACTUAL CONDITIONS BEFORE INSTALLATION.
6. ALL MECHANICAL EQUIPMENT CONTROLS SHALL MATCH TO WHAT IS EXISTING AT THE OCTA SANTA ANA BUS FACILITY.
7. COORDINATE INSTALLATION OF PIPING AND DUCTWORK WITH ELECTRICAL CONTRACTOR AND OTHER TRADES.
8. IF THERE IS A CONFLICT BETWEEN THE CONSTRUCTION DOCUMENTS AND SPECIFICATIONS, THE MOST STRINGENT WILL APPLY.
9. ALL EQUIPMENT SHALL BE INSTALLED IN STRICT ACCORDANCE WITH THE EQUIPMENT MANUFACTURERS. CONTRACTOR TO PROVIDE ALL FITTINGS, TRANSITIONS, DAMPERS, VALVES, AND OTHER DEVICES REQUIRED FOR A COMPLETE WORKABLE INSTALLATION.
10. PENETRATIONS OF DUCTS, PIPES, CONDUITS,ETC IN WALLS REQUIRING PROTECTED OPENINGS SHALL BE FIRE STOPPED, FIRE STOP MATERIAL, SHALL BE A UL/ULC-LISTED ASSEMBLY APPROPRIATE FOR FIRE OR SMOKE PENETRATIONS AS APPLICABLE AND AS APPROVED BY THE FIRE MARSHAL.
11. THE MECHANICAL CONTRACTOR SHALL PROVIDE AND INSTALL FIRE, SMOKE, OR COMBINATION SMOKE/FIRE DAMPERS AND ACCESS PANELS COMMENSURATE WITH THE RATING OF THE WALL IN ALL DUCTWORK THAT PENETRATES FIRE WALLS, FIRE BARRIERS, FIRE PARTITIONS, SMOKE BARRIERS AND SMOKE PARTITION IN ALL DUCTWORK THAT PENETRATES A HORIZONTAL OR VERTICAL FIRE PARTITION, OR AS OTHERWISE SHOWN ON THE DRAWINGS.
12. ALL BRANCH DUCTS SHALL HAVE VOLUME DAMPERS.
13. WHERE FLOW EXCEEDS 150 CFM, THE CONTRACTOR SHALL USE SMOOTH RADIUS ELBOWS OR TURNING VANES.
14. ALL DUCT JOINTS SHALL BE SEALED IN ACCORDANCE WITH SMACNA STANDARDS.
15. ALL DUCT DIMENSIONS ARE NET INSIDE VALUES. DIMENSIONS MAY BE CHANGED PROVIDED THAT THE NET FREE AREA IS MAINTAINED.
16. ALL CONCEALED DUCTWORK SHALL BE INSULATED WITH 1" FIBERGLASS INSULATING BLANKET WITH ALUMINUM FOIL FACING.
17. ALL DUCTWORK SHALL BE CONSTRUCTED, ERECTED AND TESTED IN ACCORDANCE WITH THE LOCAL REGULATIONS AND PROCEDURES DETAILED IN THE APPLICABLE STANDARDS ADOPTED BY THE SHEET METAL AND AIR CONDITIONING CONTRACTORS NATIONAL ASSOCIATION. (SMACNA).
18. ALL PIPE SHALL BE SUPPORTED FROM THE BUILDING STRUCTURE IN A NEAT AND WORKMANLIKE MANNER. THE USE OF WIRE OR METAL STRAPS TO SUPPORT PIPES WILL NOT BE PERMITTED. REFER TO SPECIFICATIONS FOR MINUMUM SPACING OF PIPE SUPPORTS.
19. THE HVAC SYSTEMS SHALL BE TESTED AND BALANCED BY AN INDEPENDENT AGENCY, UNDER THE SUPERVISION OF A LICENSED PROFESSIONAL ENGINEER. A SEALED TYPE WRITTEN REPORT SHALL BE SUBMITTED TO THE ARCHITECT/ENGINEER.
20. ALL EQUIPMENT, DUCTS PIPING, AND OTHER DEVICES AND MATERIALS INSTALLED OUTSIDE OF THE BUILDING OR OTHERWISE EXPOSED TO THE WEATHER SHALL BE COMPLETELY WEATHERPROOFED.
21. MECHANICAL EQUIPMENT, DUCTS AND PIPING ARE TO BE COORDINATED WITH STRUCTURAL JOISTS AND CROSS BRACING.
22. ALL EXPOSED PIPING IN OCCUPIED SPACES SUBJECT TO ARCHITECTURAL APPROVAL PRIOR TO INSTALLATION.

LICENSED PROFESSIONAL ENGINEER
SIYAR GALSTYAN
M-39730
EXP. 12/31/25
MECHANICAL
STATE OF CALIFORNIA

Stantec
801 S. Figueroa Street, Suite 300
Los Angeles, CA 90017

Copyright Reserved
This Contract or shall not be responsible for all dimensions. DO NOT SCALE THE DRAWING - in the event or omission shall be reported to Stantec without delay.
This drawing is the property of Stantec and shall not be reproduced in whole or in part. Reproduction or use for any purpose other than that authorized by Stantec is forbidden.

REVISION	DESCRIPTION	DATE
	100% RESUBMITTAL	5/13/2024
	100% CONSTRUCTION DRAWING SUBMITTAL	3/27/2024
	90% UPDATED CONSTRUCTION SUBMITTAL	2/13/2024
	90% CONSTRUCTION DRAWING SUBMITTAL	12/07/2023

REPLACEMENT OF MECHANICAL UNITS AT SANTA ANA BUS BASE
4301 W. MAC ARTHUR BLVD., SANTA ANA, CA

PROJECT NOTES AND SHEET INDEX

JOB #:	
DESIGN BY:	SG
DRAWN BY:	RW
CHECKED BY:	GY
DATE:	
SCALE:	12" = 1'-0"
SHEET:	M-002F

OCTA
ORANGE COUNTY TRANSPORTATION AUTHORITY
550 SOUTH MAIN STREET, ORANGE, CA

Autodesk Docs://2014233703_Santa_Ana_Bus/mech_SantaAnaBus_2014233703.rvt
5/8/2024 11:15:01 AM

IFB 4-2550 EXHIBIT B

FAN SCHEDULE

UNIT IDENTIFICATION				APPLICATION	MAX AIRFLOW (CFM)	MIN AIRFLOW (CFM)	ESP (IN-WG)	DRIVE TYPE	FAN WHEEL			FAN MOTOR				ELECTRICAL				OPERATING WEIGHT (LBS.)	CURB ADAPTER REQUIRED	EXISTING CURB SIZE	NEW CURB SIZE	MANUFACTURER	MODEL NUMBER	NOTES
MARK	NUMBER	BUILDING	UNIT/AREA SERVED						TYPE	ARRANGEMENT	SPEED (RPM)	BHP	HP	SPEED (RPM)	DRIVE TYPE	V / PH	FLA	MCA	MOP							
EF	4-1	OREPATIONS	OPER BLDG REST RM	EXHAUST	540	-	0.5	ECM	CENTRIFUGAL	UPBLAST	1,300	0.10	1/4	1,725	DIRECT	115 / 1	2.9	4.00	15	45	N	-	-	GREENHECK	CUE-099-VG	1-6, 9
EF	4-2	OPERATIONS	OPER BLDG MEN'S RM	EXHAUST	1,100	-	0.5	ECM	CENTRIFUGAL	UPBLAST	1,690	0.27	1/4	1,725	DIRECT	115 / 1	3.5	4.00	15	54	N	-	-	GREENHECK	CUE-100-VG	1-6, 9
EF	4-3	OPERATIONS	OPER BLDG ELEC RM 103	EXHAUST	700	-	0.5	ECM	CENTRIFUGAL	UPBLAST	1,330	0.13	1/4	1,725	DIRECT	115 / 1	3.5	4.00	15	54	N	-	-	GREENHECK	CUE-100-VG	1-6, 9
EF	4-4	OPERATIONS	OPER BLDG LOCKER	EXHAUST	320	-	0.5	ECM	CENTRIFUGAL	UPBLAST	1,525	0.08	1/10	1,725	DIRECT	115 / 1	1.5	2.00	15	34	N	-	-	GREENHECK	CUE-090-VG	1-6, 9
SF	4-1	OPERATIONS	ELEC RM 103	SUPPLY	700	-	0.37	ECM	CENTRIFUGAL	ROOF SUPPLY	681	0.10	1/4	1,725	BELT	115 / 1	5.8	7.25	15	175	N	-	-	GREENHECK	RSF-90-4	1-6, 8
EF	5-1	MAINTENANCE	RUNNING REPAIR RM 181	EXHAUST	40,000	20,000	1.0	VFD	CENTRIFUGAL	UPBLAST	951	hh	25	1,725	BELT	460 / 3	34.0	42.50	70	2,350	Y	72 x 72	66 x 66	GREENHECK	QEI-40	1-6, 7
EF	5-2	MAINTENANCE	RM 181	EXHAUST	30,000	15,000	1.0	VFD	CENTRIFUGAL	UPBLAST	969	14.11	15	1,725	BELT	460 / 3	21.0	26.20	45	1,880	Y	64 x 64	60 x 60	GREENHECK	QEI-36	1-6, 7
EF	5-3	MAINTENANCE	RM 178	EXHAUST	28,000	14,000	1.0	VFD	CENTRIFUGAL	UPBLAST	916	12.10	15	1,725	BELT	460 / 3	21.0	26.20	45	1,880	Y	64 x 64	60 x 60	GREENHECK	QEI-36	1-6, 7
EF	5-4	MAINTENANCE	RM 178	EXHAUST	28,000	14,000	1.0	VFD	CENTRIFUGAL	UPBLAST	916	12.10	15	1,725	BELT	460 / 3	21.0	26.20	45	1,880	Y	64 x 64	60 x 60	GREENHECK	QEI-36	1-6, 7
EF	5-5	MAINTENANCE	RM 178	EXHAUST	30,000	15,000	1.0	VFD	CENTRIFUGAL	UPBLAST	969	14.11	15	1,725	BELT	460 / 3	21.0	26.20	45	1,880	Y	64 x 64	60 x 60	GREENHECK	QEI-36	1-6, 7
EF	5-6	MAINTENANCE	STEAM CLEANER	EXHAUST	10,000	5,000	1.0	VFD	CENTRIFUGAL	UPBLAST	1,433	4.16	5	1,725	BELT	460 / 3	7.6	9.50	15	617	Y	40 x 40	38.5 x 38.5	GREENHECK	QEI-22	1-6, 7
EF	5-7	MAINTENANCE	PARTS RM 135	EXHAUST	5,950	-	0.5	VFD	CENTRIFUGAL	UPBLAST	888	1.75	2	1,725	BELT	460 / 3	3.4	4.25	15	165	N	-	-	GREENHECK	CUBE-220-20	1-6, 9
EF	5-8	MAINTENANCE	PARTS RM 135	EXHAUST	5,950	-	0.5	VFD	CENTRIFUGAL	UPBLAST	888	1.75	2	1,725	BELT	460 / 3	3.4	4.25	15	165	N	-	-	GREENHECK	CUBE-220-20	1-6, 9
EF	5-9	MAINTENANCE	PARTS RM 135	EXHAUST	5,950	-	0.5	VFD	CENTRIFUGAL	UPBLAST	888	1.75	2	1,725	BELT	460 / 3	3.4	4.25	15	165	N	-	-	GREENHECK	CUBE-220-20	1-6, 9
EF	5-10	MAINTENANCE	PARTS RM 135	EXHAUST	5,950	-	0.5	VFD	CENTRIFUGAL	UPBLAST	888	1.75	2	1,725	BELT	460 / 3	3.4	4.25	15	165	N	-	-	GREENHECK	CUBE-220-20	1-6, 9
EF	5-11	MAINTENANCE	JAN RM 219	EXHAUST	80	-	0.3	ECM	CENTRIFUGAL	UPBLAST	1,453	0.02	1/15	1,725	DIRECT	115 / 1	1.3	2.00	15	28	N	-	-	GREENHECK	CUE-060-VG	1-6, 9
(E) EF	*5-12*	MAINTENANCE	*MEN'S RM 214, WOMEN 213*	*EXHAUST*	*500*	-	*EXISTING TO REMAIN*														*N*	-	-	*DAYTON*	*5DVP0*	10
EF	5-13	MAINTENANCE	MEN'S RM 109	EXHAUST	750	-	0.6	ECM	CENTRIFUGAL	UPBLAST	1,435	0.16	1/4	1,725	DIRECT	115 / 1	3.5	4.00	15	54	N	-	-	GREENHECK	CUE-100-VG	1-6, 9
(E) EF	*5-14*	MAINTENANCE	*WOMEN/SH RM 115*	*EXHAUST*	*660*	-	*EXISTING TO REMAIN*														*N*	-	-	*DAYTON*	*20FT11*	10
(E) EF	*5-15*	MAINTENANCE	*JAN RM 114*	*EXHAUST*	*315*	-	*EXISTING TO REMAIN*														*N*	-	-	*DAYTON*	*5DVP0*	10
EF	5-16	MAINTENANCE	REBUILT RM 106	EXHAUST	6,200	3,100	0.5	VFD	CENTRIFUGAL	UPBLAST	838	1.60	2	1,725	BELT	460 / 3	3.4	4.25	15	165	N	-	-	GREENHECK	CUBE-240-20	1-6, 9
EF	5-17	MAINTENANCE	REBUILT RM 107	EXHAUST	6,200	3,100	0.5	VFD	CENTRIFUGAL	UPBLAST	838	1.60	2	1,725	BELT	460 / 3	3.4	4.25	15	165	N	-	-	GREENHECK	CUBE-240-20	1-6, 9
EF	5-18	MAINTENANCE	REBUILT RM 108	EXHAUST	6,200	3,100	0.5	VFD	CENTRIFUGAL	UPBLAST	838	1.60	2	1,725	BELT	460 / 3	3.4	4.25	15	165	N	-	-	GREENHECK	CUBE-240-20	1-6, 9
EF	5-19	MAINTENANCE	BREAK RM 121	EXHAUST	3,500	-	0.5	VFD	CENTRIFUGAL	UPBLAST	968	1.11	1 1/2	1,725	BELT	460 / 3	3.0	3.75	15	140	N	-	-	GREENHECK	CUBE-200-15	1-6, 9
EF	5-20	MAINTENANCE	CLEAN SHOP 141	EXHAUST	2,600	-	0.5	VFD	CENTRIFUGAL	UPBLAST	1,635	0.87	1	1,725	BELT	460 / 3	2.1	2.63	15	97	N	-	-	GREENHECK	CUBE-140-10	1-6, 9
EF	5-21	MAINTENANCE	MACHINE RM 144	EXHAUST	3,100	-	0.5	VFD	CENTRIFUGAL	UPBLAST	1,053	0.78	1	1,725	BELT	460 / 3	2.1	2.63	15	132	N	-	-	GREENHECK	CUBE-180-10	1-6, 9
EF	5-22	MAINTENANCE	MACHINE RM 145	EXHAUST	3,100	-	0.5	VFD	CENTRIFUGAL	UPBLAST	1,053	0.78	1	1,725	BELT	460 / 3	2.1	2.63	15	132	N	-	-	GREENHECK	CUBE-180-10	1-6, 9
(E) EF	*5-23*	MAINTENANCE	*COMP REP RM 143*	*EXHAUST*	*1,200*	-	*EXISTING TO REMAIN*														*N*	-	-	*DAYTON*	-	10
EF	5-24	MAINTENANCE	BLDG MAINT. RM 150	EXHAUST	2,330	-	0.5	ECM	CENTRIFUGAL	UPBLAST	1,501	0.64	3/4	1,725	DIRECT	115 / 1	8.8	11.00	15	76	N	-	-	GREENHECK	CUE-140-VG	1-6, 9
EF	5-25	MAINTENANCE	COMP EXCH. RM 148	EXHAUST	16,000	8,000	1.0	VFD	CENTRIFUGAL	UPBLAST	1,255	7.06	7 1/2	1,725	BELT	460 / 3	11.0	13.80	20	885	Y	46 x 46	46.5 x 46.5	GREENHECK	QEI-27	1-6, 7
EF	5-26	MAINTENANCE	REV. TOIL. RM 160/161	EXHAUST	300	-	0.5	ECM	CENTRIFUGAL	UPBLAST	1,621	0.10	1/10	1,725	DIRECT	115 / 3	1.5	2.00	15	34	N	-	-	GREENHECK	CUE-090-VG	1-6, 9
(E) EF	*5-27*	MAINTENANCE	*LOCKER RM 167*	*EXHAUST*	*140*	-	*EXISTING TO REMAIN*														*N*	-	-	*DAYTON*	*5DVN6*	10
EF	5-28	MAINTENANCE	BODY SHOP RM 174	EXHAUST	36,960	18,480	1.0	VFD	CENTRIFUGAL	UPBLAST	1,013	17.45	20	1,725	BELT	460 / 3	27.0	33.80	60	1,013	Y	64 x 64	64.5 x 64.5	GREENHECK	QEI-40	1-6, 7
EF	5-29	MAINTENANCE	STORAGE RM 155	EXHAUST	2,500	-	0.5	ECM	CENTRIFUGAL	UPBLAST	1,115	0.54	3/4	1,200	DIRECT	115 / 1	8.8	11.00	15	84	N	-	-	GREENHECK	CUE-160-VG	1-6
(E) EF	*5-30*	MAINTENANCE	*TEL RM 136*	*EXHAUST*	*285*	-	*EXISTING TO REMAIN*														*N*	-	-	*DAYTON*	*5DVP6*	10
EF	5-31	MAINTENANCE	ELEC RM 137	EXHAUST	3,000	-	0.65	ECM	CENTRIFUGAL	UPBLAST	1,406	1.07	2	1,725	DIRECT	460 / 3	3.2	4.00	15	119	N	-	-	GREENHECK	CUE-160-VG	1-6, 9
EF	5-32	MAINTENANCE	LUBE RM 138	EXHAUST	410	-	0.5	ECM	CENTRIFUGAL	UPBLAST	1,621	0.10	1/10	1,725	DIRECT	115 / 3	1.5	2.00	15	34	N	-	-	GREENHECK	CUE-090-VG	1-6, 9
EF	5-33	MAINTENANCE	C.A. RM 139	EXHAUST	6,500	-	1.0	VFD	CENTRIFUGAL	UPBLAST	1,185	2.78	3	1,725	BELT	460 / 3	4.8	6.00	15	203	N	-	-	GREENHECK	CUBE-240HP-30	1-6
EF	5-34	MAINTENANCE	ELEC RM 185	EXHAUST	2,850	-	0.5	ECM	CENTRIFUGAL	UPBLAST	1,312	0.87	2	1,725	DIRECT	460 / 3	3.2	4.00	15	119	N	-	-	GREENHECK	CUE-160-VG	1-6, 9
EF	5-35	MAINTENANCE	ELEC RM 184	EXHAUST	1,300	-	0.63	ECM	CENTRIFUGAL	UPBLAST	1,425	0.33	1/2	1,450	DIRECT	115 / 1	6.4	8.00	15	37	N	-	-	GREENHECK	CUE-130-VG	1-6, 9
(E) EF	*5-36*	MAINTENANCE	*ELEC RM 220*	*EXHAUST*	-	-	*EXISTING TO REMAIN*														*N*	-	-	*DAYTON*	*4HZ45G*	10
EF	5-37	MAINTENANCE	ENG. DYN. RM 103	EXHAUST	15,000	7,500	1.0	VFD	CENTRIFUGAL	UPBLAST	1,191	6.15	7 1/2	1,725	BELT	460 / 3	11.0	13.80	20	886	Y	46 x 46	46.5 x 46.5	GREENHECK	QEI-27	1-6, 9
EF	5-38	MAINTENANCE	TRAN DYN. RM 105	EXHAUST	850	-	0.5	ECM	CENTRIFUGAL	UPBLAST	1,448	0.17	1/4	1,725	DIRECT	115 / 1	3.5	4.00	15	54	N	-	-	GREENHECK	CUE-100-VG	1-6, 9
EF	5-39	MAINTENANCE	EQUIP. STOR. RM 129	EXHAUST	375	-	0.5	ECM	CENTRIFUGAL	UPBLAST	1,525	0.10	1/6	1,725	DIRECT	115 / 1	2.3	3.00	15	40	N	-	-	GREENHECK	CUE-095-VG	1-6, 9
EF	5-40	MAINTENANCE	LOADING ABY RM 170	EXHAUST	1,100	-	0.5	ECM	CENTRIFUGAL	UPBLAST	1,328	0.22	1/4	1,400	DIRECT	115 / 1	3.5	4.00	15	57	N	-	-	GREENHECK	CUE-120-VG	1-6, 9
EF	5-41	MAINTENANCE	UPHOLSTRY SHOP RM 151	EXHAUST	990	-	0.5	ECM	CENTRIFUGAL	UPBLAST	984	0.17	1/4	1,000	DIRECT	115 / 1	3.5	4.00	15	72	N	-	-	GREENHECK	CUE-140-VG	1-6, 9
EF	5-42	MAINTENANCE	FUEL RM 102	EXHAUST	650	-	1.0	ECM	CENTRIFUGAL	UPBLAST	1,633	0.18	1/4	1,770	DIRECT	115 / 1		7.25	15	95	N	-	-	GREENHECK	USF-8-VG	1-6, 9
(E) EF	*5-43*	MAINTENANCE	*PAINT BOOTH*	*EXHAUST*	-	-	*EXISTING TO REMAIN*														N	-	-	*NEW YORK BLOWER*	*PLR-33*	10
SF	5-1	MAINTENANCE	PARTS RM 135	SUPPLY	7,330	-	1.0	VFD	CENTRIFUGAL	ROOF SUPPLY	564	2.52	3	1,725	BELT	460 / 3	4.8	6.00	15	766	N	-	-	GREENHECK	RSF-200-30	1-6, 8
SF	5-2	MAINTENANCE	PARTS RM 135	SUPPLY	7,330	-	1.0	VFD	CENTRIFUGAL	ROOF SUPPLY	564	2.52	3	1,725	BELT	460 / 3	4.8	6.00	15	766	N	-	-	GREENHECK	RSF-200-30	1-6, 8
SF	5-3	MAINTENANCE	PARTS RM 135	SUPPLY	7,330	-	1.0	VFD	CENTRIFUGAL	ROOF SUPPLY	564	2.52	3	1,725	BELT	460 / 3	4.8	6.00	15	766	N	-	-	GREENHECK	RSF-200-30	1-6, 8
SF	5-4	MAINTENANCE	REBUILT RM 106	SUPPLY	9,200	-	1.0	VFD	CENTRIFUGAL	ROOF SUPPLY	605	3.87	5	1,725	BELT	460 / 3	7.6	9.50	15	783	N	-	-	GREENHECK	RSF-200-50	1-6, 8
SF	5-5	MAINTENANCE	BRAKE RM 121	SUPPLY	3,200	-	1.0	VFD	CENTRIFUGAL	ROOF SUPPLY	979	1.42	1.5	1,752	BELT	460 / 3	3.0	3.75	15	307	N	-	-	GREENHECK	RSF-120-15	1-6, 8
SF	5-6	MAINTENANCE	CLEAN SHOP RM 141	SUPPLY	2,400	-	1.0	VFD	CENTRIFUGAL	ROOF SUPPLY	896	0.86	1	1,725	BELT	460 / 3	2.1	2.63	15	302	Y	30 x 30	34 x 34	GREENHECK	RSF-120-10	1-6, 8
(E) SF	*5-7*	MAINTENANCE	*MECH SHOP RM 144*	*EXHAUST*	*3,000*	-	*EXISTING TO REMAIN*														*N*	-	-	*DAYTON*	*5AU56*	10
SF	5-8	MAINTENANCE	COMP. SHOP. RM 143	SUPPLY	1,300	-	1.0	VFD	CENTRIFUGAL	ROOF SUPPLY	1,274	0.57	3/4	1,725	BELT	460 / 3	1.6	2.00	15	199	N	-	-	GREENHECK	RSF-90-7	1-6, 8
SF	5-9	MAINTENANCE	BLDG MAINT. RM 150	SUPPLY	4,000	-	1.0	VFD	CENTRIFUGAL	ROOF SUPPLY	855	1.93	2	1,725	BELT	460 / 3	3.4	4.25	15	427	N	-	-	GREENHECK	RSF-150-20	1-6, 8
SF	5-10	MAINTENANCE	STORAGE RM 155	SUPPLY	2,500	-	1.0	VFD	CENTRIFUGAL	ROOF SUPPLY	905	0.92	1	1,725	BELT	460 / 3	2.1	2.63	15	302	Y	30 x 30	34 x 34	GREENHECK	RSF-120-10	1-6, 8
(E) SF	*5-11*	MAINTENANCE	*ELEC RM 137*	*EXHAUST*	*3,000*	-	*EXISTING TO REMAIN*														*N*	-	-	*DAYTON*	*SAU56*	10
SF	5-12	MAINTENANCE	ELEC RM 185	SUPPLY	850	-	0.5	VFD	CENTRIFUGAL	ROOF SUPPLY	844	0.18	1/2	1,725	BELT	460 / 3	1.1	1.38	15	194	N	-	-	GREENHECK	RSF-90-5	1-6, 8
SF	5-13	MAINTENANCE	ELEC RM 184	SUPPLY	1,200	-	0.8	VFD	CENTRIFUGAL	ROOF SUPPLY	1,147	0.43	1/2	1,725	BELT	460 / 3	1.1	1.38	15	196	N	-	-	GREENHECK	RSF-90-5	1-6, 8
SF	5-14	MAINTENANCE	ELEC RM 220	SUPPLY	3,100	-	1.0	VFD	CENTRIFUGAL	ROOF SUPPLY	968	1.34	1 1/2	1,725	BELT	460 / 3	3.0	3.75	15	307	N	-	-	GREENHECK	RSF-120-5	1-6, 8
SF	5-15	MAINTENANCE	TRAN DYN. RM 105	SUPPLY	820	-	0.4	VFD	CENTRIFUGAL	ROOF SUPPLY	764	0.15	1/2	1,725	BELT	460 / 3	1.1	1.38	15	194	N	-	-	GREENHECK	RSF-90-5	1-6, 8
SF	5-16	MAINTENANCE	LOADING ABY RM 170	SUPPLY	1,200	-	0.8	VFD	CENTRIFUGAL	ROOF SUPPLY	1,147	0.43	1/2	1,725	BELT	460 / 3	1.1	1.38	15	196	N	-	-	GREENHECK	RSF-90-5	1-6, 9
EF	6-1	FUEL/BRAKE	BRAKE/BST RM 114/001	EXHAUST	31,000	-	1.0	VFD	CENTRIFUGAL	UPBLAST	996	15.20	20	1,725	BELT	460 / 3	27.0	33.80	60	1,900	Y	64 x 64	60 x 60	GREENHECK	QEI-36	1-6, 7
EF	6-2	FUEL/BRAKE	FUEL AREA RM 115	EXHAUST	26,000	-	1.0	VFD	CENTRIFUGAL	UPBLAST	1,130	13.44	15	1,725	BELT	460 / 3	21.0	26.20	45	1,610	Y	58 x 58	54.5 x 54.5	GREENHECK	QEI-33	1-6, 7
EF	6-3	FUEL/BRAKE	BODY/SHOP 118/116	EXHAUST	18,000	-	1.0	VFD	CENTRIFUGAL	UPBLAST	1,384	9.21	10	1,725	BELT	460 / 3	14.0	17.50	30	912	Y	46 x 46	46.5 x 46.5	GREENHECK	QEI-27	1-6, 7
EF	6-4	FUEL/BRAKE	MEN'S RM	EXHAUST	120	-	0.25	ECM	CENTRIFUGAL	UPBLAST	1,691	0.03	1/15	1,725	DIRECT	115 / 1	1.3	2.00	15	28	N	-	-	GREENHECK	CUE-060-VG	1-6, 9
(E) EF	*6-5*	FUEL/BRAKE	*WOMEN'S RM*	*EXHAUST*	*100*	-	*EXISTING TO REMAIN*														*N*	-	-	*DAYTON*	*5DVN8*	10
EF	6-6	FUEL/BRAKE	LOCKER/LAUNDRY	EXHAUST	230	-	0.5	ECM	CENTRIFUGAL	UPBLAST	1,638	0.06	1/10	1,725	DIRECT	115 / 1	1.5	2.00	15	37	N	-	-	GREENHECK	CUE-080-VG	1-6, 9
EF	6-7	FUEL/BRAKE	C.A. 111/TEL. 112	EXHAUST	7,000	-	0.5	VFD	CENTRIFUGAL	UPBLAST	1,180	2.55	3	1,725	BELT	460 / 3	4.8	6.00	15	203	N	-	-	GREENHECK	CUBE-240HP-30	1-6, 9
EF	6-8	FUEL/BRAKE	FLUID TANK 110/GREESE TANK 109	EXHAUST	440	-	0.25	ECM	CENTRIFUGAL	UPBLAST	1,388	0.06	1/10	1,725	DIRECT	115 / 1	1.5	2.00	15	34	N	-	-	GREENHECK	CUE-90-VG	1-6, 9
EF	6-9	FUEL/BRAKE	FUEL RM 115	EXHAUST	1,500	-	0.75	ECM	CENTRIFUGAL	UPBLAST	1,268	0.38	1/2	1,300	DIRECT	115 / 1	6.4	8.00	15	73	N	-	-	GREENHECK	CUE-140-VG	1-6, 9
SF	6-1	FUEL/BRAKE	TIRE BAY RM 116	SUPPLY	9,000	-	1.0	VFD	CENTRIFUGAL	ROOF SUPPLY	BELT	3.69	5	1,725	BELT	460 / 3	7.6	9.50	15	783	N	-	-	GREENHECK	RSF-200-50	1-6, 8
SF	6-2	FUEL/BRAKE	BASEMENT 001	SUPPLY	4,000	-	1.0	VFD	CENTRIFUGAL	ROOF SUPPLY	855	1.93	2	1,725	BELT	460 / 3	3.4	4.25	15	427	N	-	-	GREENHECK	RSF-150-20	1-6, 8
EF	7-1	BUS WASH	BUS WASH	EXHAUST	8,000	-	0.5	VFD	CENTRIFUGAL	UPBLAST	601	1.59	2	1,725	BELT	460 / 3	3.4	4.25	15	206	N	-	-	GREENHECK	CUBE-300-20	1-6, 7
EF	7-2	BUS WASH	BUS WASH	EXHAUST	4,000	-	0.5	VFD	CENTRIFUGAL	UPBLAST	1,321	1.52	2	1,725	BELT	460 / 3	3.4	4.25	15	141	N	-	-	GREENHECK	CUBE-180-20	1-6, 9
EF	8-1	DETAILING	DETAILING/CLEANIN EQUIP. RM	EXHAUST	750	-	0.5	ECM	CENTRIFUGAL	UPBLAST	1,502	0.16	1/4	1,725	DIRECT	115 / 1	2.9	4.00	15	45	N	-	-	GREENHECK	CUE-099-VG	1-6, 9

NOTES:
1. CONTRACTOR TO VERIFY EXISTING ROOF CURB SIZE AND PROVIDE CURB ADAPTER AS NECESSARY FOR NEW FAN.
2. CONTRACTOR TO VERIFY THAT EXISTING ELECTRICAL SERVICE IS ADEQUATE FOR NEW FAN.
3. PROVIDE WITH DISCONNECT, BY DIV 26.
4. PROVIDE WITH BACKDRAFT DAMPER. LISTED MAX ETERNAL STATIC PRESSURE [EXCLUDES/INCLUDES] DAMPER. - FOR EXHAUST FANS ONLY.
5. PROVIDE WITH NEMA PREMIUM EFFICIENCY MOTORS.
6. PROVIDE WITH WEATHERPROOF CONSTRUCTION.
7. EQUIPMENT FURNISHED WITH BACK DRAFT DAMPER, DUCT ADAPTERS, TWO SPEED, 2-WINDING FAN MOTOR. INTERLOCK WITH FUTURE LNG SYSTEM.
8. PROVIDE WITH DUCT ADAPTER, BACKDRAFT DAMPER, DISCONNECT SWITCH, SMOKE DETECTOR, S'TAT AND FILTERS.
9. EQUIPMENT BACKDRAFT DAMPER AND DISCONNECT SWITCH.
10. EXISTING EQUIPMENT TO REMAIN.

Stantec
801 S. Figueroa Street, Suite 300
Los Angeles, CA 90017

Copyright Reserved
The Contractor shall verify and be responsible for all dimensions. DO NOT scale the drawing - any errors or omissions shall be reported to Stantec without delay.
The Copyrights to all designs and drawings are the property of Stantec. Reproduction or use for any purpose other than that authorized by Stantec is forbidden.

REVISION	DESCRIPTION	DATE
	100% RESUBMITTAL	5/13/2024
	100% CONSTRUCTION DRAWING SUBMITTAL	3/27/2024
	90% UPDATED CONSTRUCTION SUBMITTAL	2/13/2024
	90% CONSTRUCTION DRAWING SUBMITTAL	12/07/2023

REPLACEMENT OF MECHANICAL UNITS AT SANTA ANA BUS BASE
4301 W. MAC ARTHUR BLVD., SANTA ANA, CA

FAN SCHEDULE

JOB #:
DESIGN BY: SG
DRAWN BY: RW
CHECKED BY: GY
DATE:
SCALE:
SHEET: **M-003F**

LICENSED PROFESSIONAL ENGINEER
SEVAK GALSTYAN
M 39730
EXP. 12/31/25
MECHANICAL
STATE OF CALIFORNIA

OCTA
ORANGE COUNTY
TRANSPORTATION AUTHORITY
550 SOUTH MAIN STREET, ORANGE, CA

Autodesk Docs://20142333703_Santa_Ana_Bus/mech_SantaAnaBus_20142333703.rvt

5/8/2024 11:15:02 AM

PACKAGED ROOFTOP UNIT SCHEDULE

UNIT IDENTIFICATION					FAN DATA				COIL DATA												EFFICIENCY			ELECTRICAL				UNIT DIMENSIONS							
					INDOOR			OUTDOOR			DX COOLING COIL							HEATING COIL																
MARK	NUMBER	TYPE	BUILDING	AREA SERVED	FAN DRIVE TYPE	DESIGN AIRFLOW (CFM)	DESIGN ESP (INWC)	FAN DRIVE TYPE	AMBIENT DRY BULB	MINIMUM OUTSIDE AIR (CFM)	REFRIG.	TOTAL COOLING CAPACITY (BTU/H)	SENS. COOLING CAPACITY...	ENTERING DB (F)	ENTERING WB (F)	LEAVING DB (F)	LEAVING WB (F)	OUTPUT HEATING CAPACITY	ENTERIN G DB (F)	LEAVING DB (F)	HSPF	EER	SEER	V / PH	SYSTE M POWER (kW)	MCA	MOP	OPERATING WEIGHT (LBS)	HEIGHT (FT)	WIDTH (FT)	LENGTH (FT)	CURB ADAPTER MODEL	MANUFACTURER	MODEL	NOTES
RTU	4-1	PACKAGED RTU	OPERATIONS	NORTH	VARIABLE DIRECT	4,830	1	DIRECT	95	740	R-410A	178,000	125500	80	67	55	54	202	70	108	-	11	14.6	460 / 3	17.4	41.0	50	1,925	5	7.5	10.5	CA-TRN-593-TRN-592-...	TRANE	YSJ1804S0L	ALL
RTU	4-2	PACKAGED RTU	OPERATIONS	CENTRAL NORTH	VARIABLE DIRECT	2,350	1	DIRECT	95	100	R-410A	74,000	55,000	80	67	56	56	65	70	95	-	11	14.6	460 / 3	7.1	18.0	20	968	4.2	4.4	7.3	-	TRANE	YSJ072A4S0L	ALL
RTU	4-3	PACKAGED RTU	OPERATIONS	CENTRAL SOUTH	VARIABLE DIRECT	4,100	1	DIRECT	95	885	R-410A	118,000	91,000	80	67	58	57	121	70	97	-	11	14.6	460 / 3	11.8	29.0	40	1,020	4.2	4.4	7.3	-	TRANE	YSJ120A4S0L	ALL
RTU	4-4	PACKAGED RTU	OPERATIONS	SOUTH	VARIABLE DIRECT	4,000	1	DIRECT	95	940	R-410A	119,000	92,000	80	67	58	57	121	70	97	-	11	14.6	460 / 3	10.5	25.0	30	995	4.2	4.4	7.3	-	TRANE	YSJ102A4S0L	ALL
RTU	5-1	PACKAGED RTU	MAINTENANCE	2ND FLR OFFICES	VARIABLE DIRECT	5,910	1	DIRECT	95	830	R-410A	182,080	149,000	75	61	50	49	202	70	101	-	10.8	14.0	460 / 3	19.7	49.0	60	1,954	5	7.5	10.5	-	TRANE	YSJ210A4S0L	ALL
RTU	5-2	PACKAGED RTU	MAINTENANCE	BREAK ROOM	VARIABLE DIRECT	5,040	1	DIRECT	95	1,115	R-410A	179,000	128,000	80	67	56	55	202	70	104	-	10.8	14.0	460 / 3	17.6	41.0	50	1,924	5	7.5	10.5	-	TRANE	YSJ1804S0L	ALL
RTU	5-3	PACKAGED RTU	MAINTENANCE	REVENUE OFFICES	VARIABLE DIRECT	5,400	1	DIRECT	95	1,250	R-410A	180,000	132,000	80	67	56	55	202	70	104	-	10.8	14.0	460 / 3	17.6	41.0	50	1,924	5	7.5	10.5	-	TRANE	YSJ1804S0L	ALL
RTU	5-4	PACKAGED AC	MAINTENANCE	OFFICE	VARIABLE DIRECT	770	1	DIRECT	95	30	R-410A	23,800	6,600	80	67	55	53	23,200	70	95	7	11	13.4	208 / 1	1.8	20.6	30	328	3.3	3.75	4.9	CA-TRN-1213-TRN-59...	TRANE	4WCC4048E1000A	ALL
RTU	5-5	PACKAGED AC	MAINTENANCE	OFFICE	VARIABLE DIRECT	770	1	DIRECT	95	50	R-410A	23,800	9,300	80	67	55	53	23,200	70	95	7	11	13.4	208 / 1	1.8	20.6	30	328	3.3	3.75	4.9	CA-TRN-1213-TRN-59...	TRANE	4WCC4048E1000A	ALL
RTU	6-1	PACKAGED AC	FUEL/BRAKE	OFFICE	VARIABLE DIRECT	1,570	0.5	DIRECT	95	135	R-410A	47,000	42,000	80	67	55	53	45,000	70	95	7	11	13.4	208 / 1	4.1	31.9	50	425	4.1	4	5.1	CA-TRN-1235-TRN-5750	TRANE	4WCC4048E1000A	ALL

NOTES:
1. CONTRACTOR TO VERIFY EXISTING ROOF CURB SIZE AND PROVIDE CURB ADAPTER MODEL PER SCHEDULE FOR NEW EQUIPMENT.
2. PROVIDE WITH INTERMITTENT IGNITION DEVICE (IID)
3. FILTERS ARE TO BE PROVIDED WITH PRE-FILTER. MAXIMUM PRESSURE DROP SHALL BE BASED ON TOTAL PRESSURE DROP ACROSS THE FILTER BANK WITH DIRTY FILTERS.
4. PROVIDE WITH 100% MODULATING DRY-BULB TYPE AIR ECONOMIZER.
5. DISCONNECT PROVIDED BY DIVISION 26 CONTRACTOR.
6. PROVIDE SCCR RATINGS GREATER THAN FAULT AMPS SHOWN ON ELECTRICAL DRAWINGS.
7. PROVIDE SUPPLY AND POWERED EXHAUST FANS WITH VFD- BY RTU MANUFACTURER.
8. UNIT SHALL COMPLY WITH ECONOMIZER FAULT DETECTION AND DIAGNOSTICS (FDD) REQUIREMENTS PER CALIFORNIA TITLE 24, PART 6.
9. PROVIDE WITH DUCT SMOKE DETECTOR FOR AUTOMATIC UNIT SHUT OFF. FURNISHED AND WIRED BY DIV 26 CONTRACTOR. ISNTALLED BY DIV 23 CONTRACTOR.
10. LISTED UNIT OPERATING WEIGHT EXCLUDES CURB.
11. UNIT TO BE BACNET COMPATIBLE AND SHALL BE TIED TO THE EXISTING ENERGY MANAGEMENT CONTROL SYSTEM (EMCS).
12. PROVIDE VIBRATION ISOLATION AND SEISMIC RESTRAINT.
13. PROVIDE INVERTER-READY NEMA PREMIUM EFFICIENCY MOTOR WITH SHAFT GROUNDING SYSTEM.
14. PROVIDE A PROGRAMMABLE THERMOSTAT WITH TEMPERATURE SETPOINTS FOR AT LEAST FOUR SCHEDULING PERIODS WITHIN 24 HOURS.
15. PROVIDE CONDENSER COIL GAURD.
16. PROVIDE WITH 115V FIELD POWERED SERVICE OUTLET.
17. PROVIDE WITH MERV-13 FILTER.

MAKEUP AIR UNIT SCHEDULE

UNIT IDENTIFICATION					SUPPLY FAN					HEATING			ELECTRICAL				PHYSICAL CHARACTERISTICS							
MARK	NUMBER	TYPE	BUILDING	AREA SERVED	SUPPLY AIR VOLUME (CFM)	TOTAL STATIC PRESSURE (IN. W.C.)	MOTOR TYPE	MOTOR POWER (HP)	MOTOR SPEED (RPM)	MAX INPUT (BTU/H)	FUEL TYPE	SUPPLY GAS PRESSURE (INWC)	UNIT VOLT / PH	FLA	CONTROL V / PH	CONTROL TRANSFORMER (VA)	UNIT OPERATING WEIGHT (LBS)	HEIGHT (IN)	WIDTH (IN)	LENGTH (IN)	CURB ADAPTER MODEL	MANUFACTURER	MODEL	NOTES
MAU	5-1	MAKEUP AIR UNIT	MAINTENANCE	RUNNING REPAIR, RM 181	20,000	3	BELT	20	1,800	838,000	NATURAL GAS	10 - 14	460 / 3	28.1	115 / 1	500	2,699	63	91	186	VIBREX SRC-125	TRANE	DFOA-125-HLB	1-10
MAU	5-2	MAKEUP AIR UNIT	MAINTENANCE	RUNNING REPAIR, RM 179	15,000	3	BELT	15	1,800	668,000	NATURAL GAS	10 - 14	460 / 3	22.1	115 / 1	500	1,958	51	78	166	VIBREX SRC-122	TRANE	DFOA-122-HRB	1-10
MAU	5-3	MAKEUP AIR UNIT	MAINTENANCE	RUNNING REPAIR, RM 179	14,000	3	BELT	15	1,800	623,000	NATURAL GAS	10 - 14	460 / 3	22.1	115 / 1	500	1,958	51	78	166	VIBREX SRC-122	TRANE	DFOA-122-HRB	1-10
MAU	5-4	MAKEUP AIR UNIT	MAINTENANCE	RUNNING REPAIR, RM 179	14,000	3	BELT	15	1,800	623,000	NATURAL GAS	10 - 14	460 / 3	22.1	115 / 1	500	1,958	51	78	166	VIBREX SRC-122	TRANE	DFOA-122-HRB	1-10
MAU	5-5	MAKEUP AIR UNIT	MAINTENANCE	RUNNING REPAIR, RM 179	15,000	3	BELT	15	1,800	668,000	NATURAL GAS	10 - 14	460 / 3	22.1	115 / 1	500	1,958	51	78	166	VIBREX SRC-122	TRANE	DFOA-125-HRB	1-10
MAU	5-6	MAKEUP AIR UNIT	MAINTENANCE	BODY SHOP, RM 174	17,700	3	BELT	15	1,800	788,000	NATURAL GAS	10 - 14	460 / 3	22.1	115 / 1	500	2,699	63	91	186	VIBREX SRC-125	TRANE	DFOA-125-HRB	1-10
MAU	5-7	MAKEUP AIR UNIT	MAINTENANCE	COMP. EXH., RM 148	6,000	3	BELT	7 1/2	1,800	223,000	NATURAL GAS	10 - 14	460 / 3	12.1	115 / 1	500	1,187	39	52	140	VIBREX SRC-115	TRANE	DFOA-115-HRB	1-10
MAU	5-8	MAKEUP AIR UNIT	MAINTENANCE	CORR., RM 101	2,400	3	BELT	3	1,800	175,000	NATURAL GAS	10 - 14	460 / 3	5.9	115 / 1	500	1,187	39	52	140	VIBREX SRC-109	TRANE	DFOA-109-HRB	1-10
(E) MAU	*5-9*	*MAKEUP AIR UNIT*	*MAINTENANCE*	*PAINT BOOTH*	*37,800*	2	-	-	-	-	-	-	-	-	-	-	-	-	-	-	-	-	-	*11*

NOTES:
1. PROVIDE WITH INLET HOOD
2. PROVIDE WITH SHUTOFF DAMPERS
3. PROVIDE WITH VIBRATION ISOLATORS
4. PROVIDE WITH PAINTED CABINET / ACCESSORIES
5. PROVIDE WITH DISCONNECT SWITCH BY DIVISION 26.
6. PROVIDE WITH REMOTE CONTROL STATION
7. PROVIDE WITH MRT TOUCH REMOTE CONTROL STATION.
8. PROVIDE WITH G-90 GALVANIZED STEEL FILTER.
9. CONTRACTOR TO VERIFY EXISTING ROOF CURB SIZE AND PROVIDE CURB ADAPTER MODEL PER SCHEDULE FOR NEW EQUIPMENT.
10. PROVIDE WITH EMERGENCY POWER OFF SWITCH.
11. EXISTING EQUIPMENT TO REMAIN.

LICENSED PROFESSIONAL ENGINEER SEVAK GALSTYAN M-39730 EXP. 12/31/25 MECHANICAL STATE OF CALIFORNIA

IFB 4-2550 EXHIBIT B

Stantec
801 S. Figueroa Street, Suite 300
Los Angeles, CA 90017

Copyright Reserved
The Contractor shall verify and be responsible for all dimensions. DO NOT scale the drawing - use dimensions as indicated or as required by Engineer without delay.
This drawing is the property of the Consultant and may not be reproduced in whole or in part without the consent of the Consultant. Reproduction or use for any purpose other than that authorized by Stantec is forbidden.

REVISION	DESCRIPTION	DATE
	100% RESUBMITTAL	5/13/2024
	100% CONSTRUCTION DRAWING SUBMITTAL	3/27/2024
	90% UPDATED CONSTRUCTION SUBMITTAL	2/13/2024
	90% CONSTRUCTION DRAWING SUBMITTAL	12/07/2023

REPLACEMENT OF MECHANICAL UNITS AT SANTA ANA BUS BASE
4301 W. MAC ARTHUR BLVD., SANTA ANA, CA

ROOFTOP AND MAKEUP AIR UNITS SCHEDULES

JOB #:	
DESIGN BY:	SG
DRAWN BY:	RW
CHECKED BY:	GY
DATE:	
SCALE:	
SHEET:	M-004F

OCTA
ORANGE COUNTY TRANSPORTATION AUTHORITY
550 SOUTH MAIN STREET, ORANGE, CA

Autodesk Docs://2014233703_Santa_Ana_Bus/mech_SantaAnaBus_2014233703.rvt
5/8/2024 11:15:03 AM

PACKAGED HEAT PUMP SCHEDULE

UNIT IDENTIFICATION					FAN DATA			COIL DATA												EFFICIENCY		ELECTRICAL				UNIT DIMENSIONS							
											COOLING MODE						HEATING MODE																
MARK	NUMBER	TYPE	BUILDING	AREA SERVED	FAN DRIVE TYPE	DESIGN AIRFLOW (CFM)	DESIGN ESP (INWC)	AMBIENT DRY BULB (F)	MIN. OUTSIDE AIR (CFM)	REFRIG.	TOTAL COOLING CAPACITY (MBH)	POWER INPUT (kW)	ENTERING DB (F)	ENTERING WB (F)	LEAVING DB (F)	LEAVING WB (F)	OUTPUT HEATING CAPACITY	POWER INPUT (kW)	ENTERING DB (F)	LEAVING DB (F)	EER (BTU/WATT-HR)	SEER (BTU/WATT-HR)	V / PH	MCA	MOP	FILTER RATING	OPERATING WEIGHT (LBS)	HEIGHT (FT)	WIDTH (FT)	LENGTH (FT)	CURB ADAPTER MODEL	MANUFACTURER	MODEL	NOTES
HP	5-1	HEAT PUMP	MAINTENANCE	CONTROL	4-SPEED DIRECT	770	0.5	95	30	R-410A	23,800	2.09	76	62	55	54	23,200	1.95	70	95	11	13.4	208 / 1	20.6	30	MERV 13	328	46	45	52	-	TRANE	4WCC4024E1000A	ALL
HP	6-1	HEAT PUMP	FUEL/BRAKE	BLDG. OFFICE	4-SPEED DIRECT	770	0.5	95	30	R-410A	23,800	2.09	74	61	55	54	23,200	1.95	70	95	11	13.4	208 / 1	20.6	30	MERV 13	328	46	45	52	CA-TRN-1213-TRN-590-9	TRANE	4WCC4024E1000A	ALL

NOTES:
1. CONTRACTOR TO VERIFY EXISTING ROOF CURB SIZE AND PROVIDE CURB ADAPTER AS NECESSARY FOR NEW EQUIPMENT.
2. PROVIDE WITH INTERMITTENT IGNITION DEVICE (IID)
3. FILTERS ARE TO BE PROVIDED WITH PRE-FILTER. MAXIMUM PRESSURE DROP SHALL BE BASED ON TOTAL PRESSURE DROP ACROSS THE FILTER BANK WITH DIRTY FILTERS.
4. PROVIDE WITH 100% MODULATING DRY-BULB TYPE AIR ECONOMIZER.
5. DISCONNECT PROVIDED BY DICISION 26 CONTRACTOR.
6. PROVIDE SCCR RATINGS GREATER THAN FAULT AMPS SHOWN ON ELECTRICAL DRAWINGS.
7. PROVIDE SUPPLY AND POWERED EXHAUST FANS WITH VFD- BY RTU MANUFACTURER.
8. UNIT SHALL COMPLY WITH ECONOMIZER FAULT DETECTION AND DIAGNOSTICS (FDD) REQUIREMENTS PER CALIFORNIA TITLE 24, PART 6.
9. PROVIDE WITH DUCT SMOKE DETECTOR FOR AUTOMATIC UNIT SHUT OFF. FURNISHED AND WIRED BY DIV 26 CONTRACTOR. ISNTALLED BY DIV 23 CONTRACTOR.
10. LISTED UNIT OPERATING WEIGHT EXCLUDES CURB.
11. UNIT TO BE BACNET COMPATIBLE AND SHALL BE TIED TO THE EXISTING ENERGY MANAGEMENT CONTROL SYSTEM (EMCS).
12. PROVIDE VIBRATION ISOLATION AND SEISMIC RESTRAINT.
13. PROVIDE INVERTER-READY NEMA PREMIUM EFFICIENCY MOTOR WITH SHAFT GROUNDING SYSTEM.
14. PROVIDE A PROGRAMMABLE THERMOSTAT WITH TEMPERATURE SETPOINTS FOR AT LEAST FOUR SCHEDULING PERIODS WITHIN 24 HOURS.
15. PROVIDE CONDENSER COIL GAURD.
16. PROVIDE WITH 115V FIELD POWERED SERVICE OUTLET.

PACKAGED AIR CONDITIONER SCHEDULE

UNIT IDENTIFICATION					FAN DATA		COIL DATA			EFFICIENCY		ELECTRICAL				FILTER	UNIT DIMENSIONS							
MARK	NUMBER	TYPE	BUILDING	AREA SERVED	FAN DRIVE TYPE	DESIGN AIRFLOW (CFM)	AMBIENT DRY BULB (F)	REFRIGERANT	TOTAL COOLING CAPACITY (MBH)	EER	SEER	V / PH	SYSTEM POWER (kW)	MCA	MOP	FILTER RATING	OPERATING WEIGHT (LBS)	HEIGHT (IN)	WIDTH (IN)	LENGTH (IN)	CURB ADAPTER MODEL	MANUFACTURER	MODEL	NOTES
AC	4-1	PACKAGED COOLING UNIT	OPERATIONS	COMPUTER ROOM	4-SPEED DIRECT	785	95	R-410A	23,200	11	13.4	208 / 1	3.4	16.7	25	MERV 13	358	36	49	42	CA-TRN-1213-TRN-590-9	TRANE	4TCC4042E1000A	ALL
AC	4-2	PACKAGED COOLING UNIT	OPERATIONS	TELECOM ROOM	4-SPEED DIRECT	785	95	R-410A	23,200	11	13.4	208 / 1	3.4	16.7	25	MERV 13	358	36	49	42	-	TRANE	4TCC4042E1000A	ALL
AC	5-1	PACKAGED COOLING UNIT	MAINTENANCE	COMM ROOM	4-SPEED DIRECT	785	95	R-410A	23,200	11	13.4	208 / 1	3.4	16.7	25	MERV 13	358	36	49	42	-	TRANE	4TCC4042E1000A	ALL
AC	5-2	PACKAGED COOLING UNIT	MAINTENANCE	LAN ROOM	4-SPEED DIRECT	785	95	R-410A	23,200	11	13.4	208 / 1	3.4	16.7	25	MERV 13	358	36	49	42	-	TRANE	4TCC4042E1000A	ALL
AC	6-1	PACKAGED COOLING UNIT	FUEL/BRAKE	COMM	4-SPEED DIRECT	785	95	R-410A	23,200	11	13.4	208 / 1	3.4	16.7	25	MERV 13	358	36	49	42	CA-TRN-1213-TRN-590-9	TRANE	4TCC4042E1000A	ALL

NOTES:
1. CONTRACTOR TO VERIFY EXISTING ROOF CURB SIZE AND PROVIDE CURB ADAPTER AS NECESSARY FOR NEW EQUIPMENT.
2. PROVIDE WITH INTERMITTENT IGNITION DEVICE (IID)
3. FILTERS ARE TO BE PROVIDED WITH PRE-FILTER. MAXIMUM PRESSURE DROP SHALL BE BASED ON TOTAL PRESSURE DROP ACROSS THE FILTER BANK WITH DIRTY FILTERS.
4. PROVIDE WITH 100% MODULATING DRY-BULB TYPE AIR ECONOMIZER.
5. DISCONNECT PROVIDED BY DICISION 26 CONTRACTOR.
6. PROVIDE SCCR RATINGS GREATER THAN FAULT AMPS SHOWN ON ELECTRICAL DRAWINGS.
7. PROVIDE SUPPLY AND POWERED EXHAUST FANS WITH VFD- BY RTU MANUFACTURER.
8. UNIT SHALL COMPLY WITH ECONOMIZER FAULT DETECTION AND DIAGNOSTICS (FDD) REQUIREMENTS PER CALIFORNIA TITLE 24, PART 6.
9. PROVIDE WITH DUCT SMOKE DETECTOR FOR AUTOMATIC UNIT SHUT OFF. FURNISHED AND WIRED BY DIV 26 CONTRACTOR. ISNTALLED BY DIV 23 CONTRACTOR.
10. LISTED UNIT OPERATING WEIGHT EXCLUDES CURB.
11. UNIT TO BE BACNET COMPATIBLE AND SHALL BE TIED TO THE EXISTING ENERGY MANAGEMENT CONTROL SYSTEM (EMCS).
12. PROVIDE VIBRATION ISOLATION AND SEISMIC RESTRAINT.
13. PROVIDE INVERTER-READY NEMA PREMIUM EFFICIENCY MOTOR WITH SHAFT GROUNDING SYSTEM.
14. PROVIDE A PROGRAMMABLE THERMOSTAT WITH TEMPERATURE SETPOINTS FOR AT LEAST FOUR SCHEDULING PERIODS WITHIN 24 HOURS.
15. PROVIDE CONDENSER COIL GAURD.
16. PROVIDE WITH 115V FIELD POWERED SERVICE OUTLET.

LICENSED PROFESSIONAL ENGINEER
SEVAK GALSTIAN
M-39730
EXP. 12/31/25
MECHANICAL
STATE OF CALIFORNIA

IFB 4-2550 EXHIBIT B

Stantec
801 S. Figueroa Street, Suite 300
Los Angeles, CA 90017

Copyright Reserved
The Contractor shall verify and be responsible for all dimensions. DO NOT scale the drawing - use dimensions or omissions whether not specified to Engineer without delay.
This drawing is the property of the Consultant and shall not be reproduced in whole or in part without permission. Reproduction or use for any purpose other than that authorized by Stantec is forbidden.

REVISION	DESCRIPTION	DATE
	100% RESUBMITTAL	5/13/2024
	100% CONSTRUCTION DRAWING SUBMITTAL	3/27/2024
	90% UPDATED CONSTRUCTION SUBMITTAL	2/13/2024

REPLACEMENT OF MECHANICAL UNITS AT SANTA ANA BUS BASE
4301 W. MAC ARTHUR BLVD., SANTA ANA, CA

HEATPUMP AND AIR CONDITIONER SCHEDULES

JOB #:
DESIGN BY: Designer
DRAWN BY: Author
CHECKED BY: Checker
DATE:
SCALE:
SHEET: M-005F

OCTA
ORANGE COUNTY TRANSPORTATION AUTHORITY
550 SOUTH MAIN STREET, ORANGE, CA

Autodesk Docs://2014233703_Santa_Ana_Bus/mech_SantaAnaBus_2014233703.rvt
5/8/2024 11:15:03 AM

IFB 4-2550 EXHIBIT B

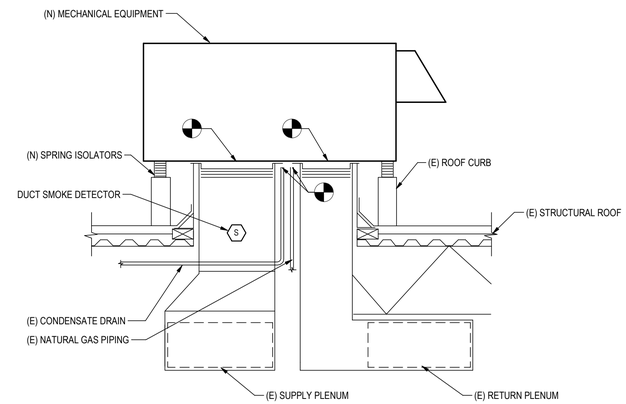

NOTES:

1. CONTRACTOR SHALL PERFORM WORK IN A MANNER SO THAT NO WARRANTIES ARE VOIDED.
2. REFER TO THE CONTRACT DOCUMENTS FOR DUCT MATERIAL AND INSULATION REQUIREMENTS.
3. THE CURB INSULATION SHALL BE EQUAL TO THE ROOF INSULATION RATING
4. COORDINATE THE LOCATION AND SIZE OF THE EQUIPMENT RAIL BASED ON THE EQUIPMENT.
5. CONTRACTOR TO REUSE EXISTING ROOF CURBS AND/OR PROVIDE NEW ROOF CURB ADAPTERS AS SPECIFIED ON THE SCHEDULES.
6. THE TOP OF THE CURB IS TO BE MOUNTED A MINIMUM OF 18 INCHES / 46 CM ABOVE THE TOP OF THE ROOF UNLESS NOTED OTHERWISE.
7. PROVIDE A HINGED FAN BASE FOR ACCESS TO THE MOTORIZED DAMPER
8. CONTRACTOR TO VERIFY EXISTING ROOF CURB IS ADEQUATE FOR NEW EQUIPMENT AND PROVIDE WITH CURB ADAPTER AS REQUIRED.

2 M-006 ROOFTOP EQUIPMENT RECONNECTION DETAIL

12" = 1'-0"

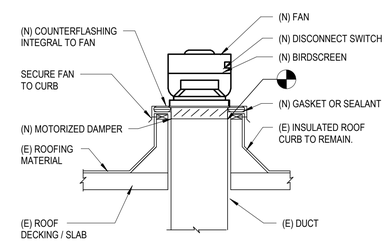

NOTES:

1. COORDINATE SCOPE OF WORK WITH ROOFING CONTRACTOR / OWNER TO NOT VOID ANY WARRANTIES.
2. CONTRACTOR IS TO REUSE EXISTING DUCT.
3. COORDINATE THE LOCATION AND SIZE OF THE EQUIPMENT RAIL BASED ON THE EQUIPMENT.
4. CONTRACTOR IS TO REUSE EXISTING INSULATED ROOF CURB AND/OR PROVIDE NEW ROOF CURB ADAPTERS AS SPECIFIED ON THE SCHEDULES.
5. THE TOP OF THE CURB IS TO BE MOUNTED A MINIMUM OF 18 INCHES / 46 CM ABOVE THE TOP OF THE ROOF UNLESS NOTED OTHERWISE.
6. PROVIDE A HINGED FAN BASE FOR ACCESS TO THE MOTORIZED DAMPER.
7. CONTRACTOR TO VERIFY EXISTING ROOF CURB IS ADEQUATE FOR NEW EQUIPMENT AND PROVIDE WITH CURB ADAPTER AS REQUIRED.

1 M-006 ROOF MOUNTED FAN RECONNECTION DETAIL

12" = 1'-0"

LICENSED PROFESSIONAL ENGINEER
SEVAN GALSTYAN
M-39730
EXP. 02/31/25
MECHANICAL
STATE OF CALIFORNIA

Stantec
801 S. Figueroa Street, Suite 300
Los Angeles, CA 90017

Copyright Reserved
The Contractor shall verify and be responsible for all dimensions. DO NOT scale the drawing, any errors or omissions shall be reported to Stantec without delay.
This drawing is the property of Stantec and shall not be reproduced in whole or in part without written permission. Reproduction or use for any purpose other than that authorized by Stantec is forbidden.

REVISION	DESCRIPTION	DATE
	100% RESUBMITTAL	5/13/2024
	100% CONSTRUCTION DRAWING SUBMITTAL	3/27/2024
	90% UPDATED CONSTRUCTION SUBMITTAL	2/13/2024
	90% CONSTRUCTION DRAWING SUBMITTAL	12/07/2023

REPLACEMENT OF MECHANICAL UNITS AT SANTA ANA BUS BASE
4301 W. MAC ARTHUR BLVD., SANTA ANA, CA

MECHANICAL DETAILS

JOB #:	
DESIGN BY:	SG
DRAWN BY:	RW
CHECKED BY:	GY
DATE:	
SCALE:	12" = 1'-0"
SHEET:	M-006F

OCTA
ORANGE COUNTY TRANSPORTATION AUTHORITY
550 SOUTH MAIN STREET, ORANGE, CA

Autodesk Docs://2014233703_Santa_Ana_Bus/mech_SantaAnaBus_2014233703.rvt

5/8/2024 11:15:03 AM

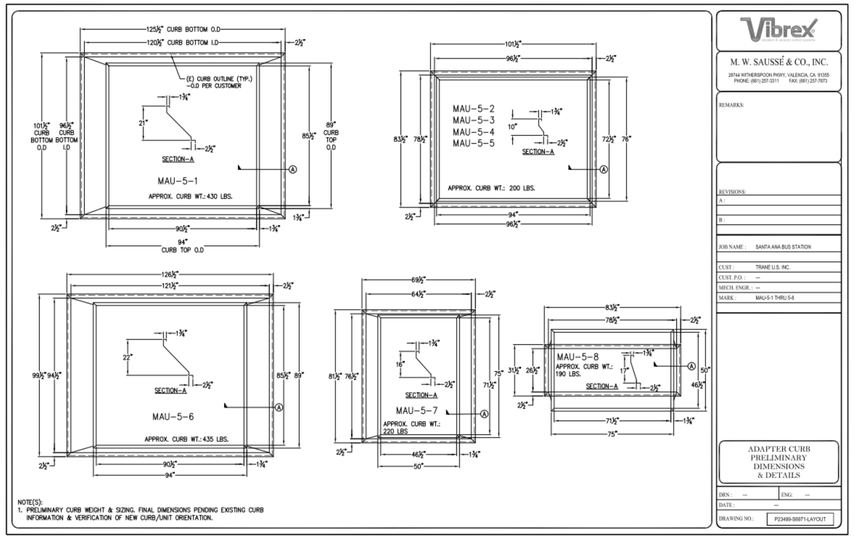

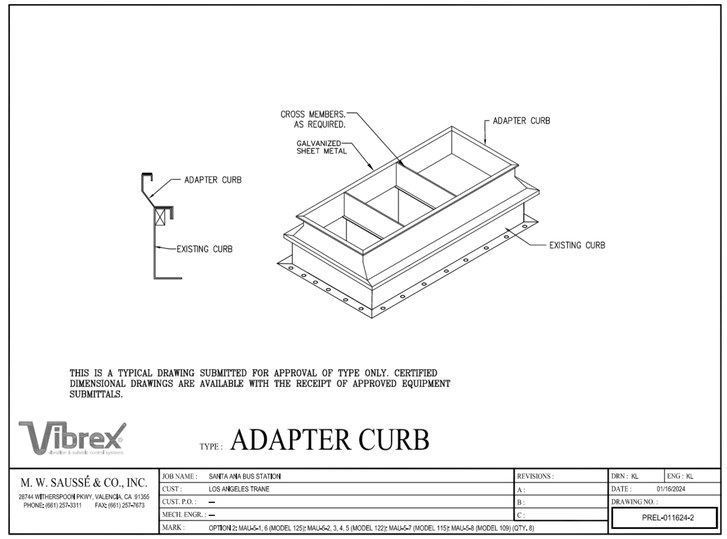

2 M-007 MAU ROOF CURB ADAPTER DETAIL

12" = 1'-0"

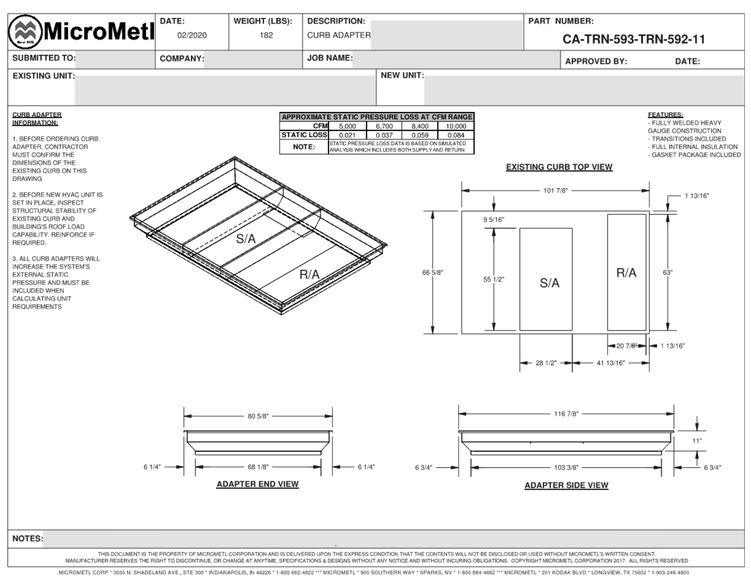

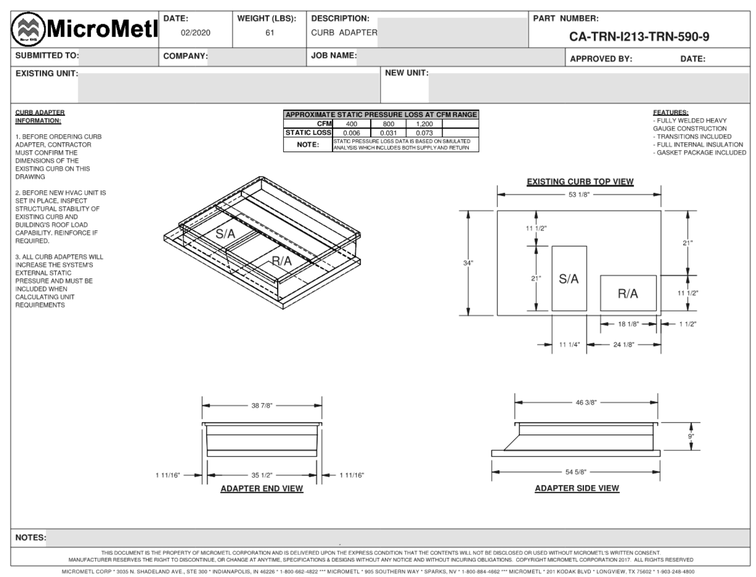

1 M-007 RTU ROOF CURB ADAPTER DETAIL

12" = 1'-0"

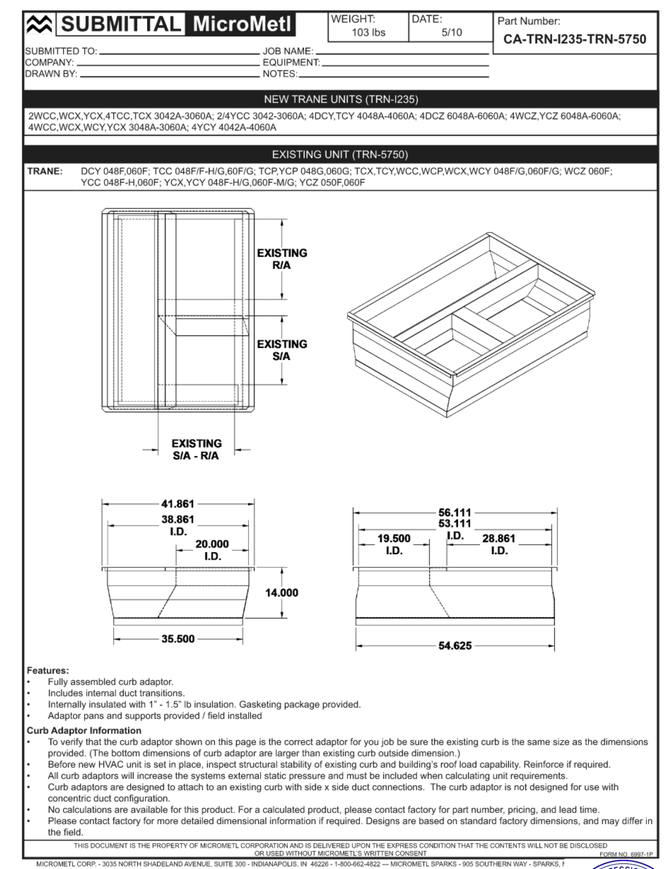

Stantec
801 S. Figueroa Street, Suite 300
Los Angeles, CA 90017

Copyright Reserved
The Contractor shall verify and be responsible for all dimensions. DO NOT scale the drawing - use dimensions or details as indicated. Report errors to Stantec without delay.
This drawing is the property of Stantec and shall not be reproduced in whole or in part without permission. Reproduction or use for any purpose other than that authorized by Stantec is forbidden.

REVISION	DESCRIPTION	DATE
	100% RESUBMITTAL	5/13/2024
	100% CONSTRUCTION DRAWING SUBMITTAL	3/27/2024
	90% UPDATED CONSTRUCTION SUBMITTAL	2/13/2024

REPLACEMENT OF MECHANICAL UNITS AT SANTA ANA BUS BASE

4301 W. MAC ARTHUR BLVD., SANTA ANA, CA

MECHANICAL DETAILS

JOB #:
DESIGN BY: SG
DRAWN BY: RW
CHECKED BY: GY
DATE:
SCALE: 12" = 1'-0"
SHEET: M-007F

LICENSED PROFESSIONAL ENGINEER SEYAK GALSTYAN M-39730 EXP. 12/31/25 MECHANICAL STATE OF CALIFORNIA

OCTA
ORANGE COUNTY TRANSPORTATION AUTHORITY
550 SOUTH MAIN STREET, ORANGE, CA

Autodesk Docs://2014233703_Santa_Ana_Bus/mech_SantaAnaBus_2014233703.rvt
5/8/2024 11:15:03 AM

IFB 4-2550 EXHIBIT B

Stantec

801 S. Figueroa Street, Suite 300
Los Angeles, CA 90017

Copyright Reserved
The Contractor shall verify and be responsible for all dimensions. DO NOT scale the drawing - use dimensions or contact the architect/engineer for clarification. Drawings not to be used for construction purposes until signed and sealed by the Architect/Engineer. Reproduction or use for any purpose other than that authorized by Stantec is forbidden.

REVISION	DESCRIPTION	DATE
	100% RESUBMITTAL	5/13/2024
	100% CONSTRUCTION DRAWING SUBMITTAL	3/27/2024
	90% UPDATED CONSTRUCTION SUBMITTAL	2/13/2024
	90% CONSTRUCTION DRAWING SUBMITTAL	12/07/2023

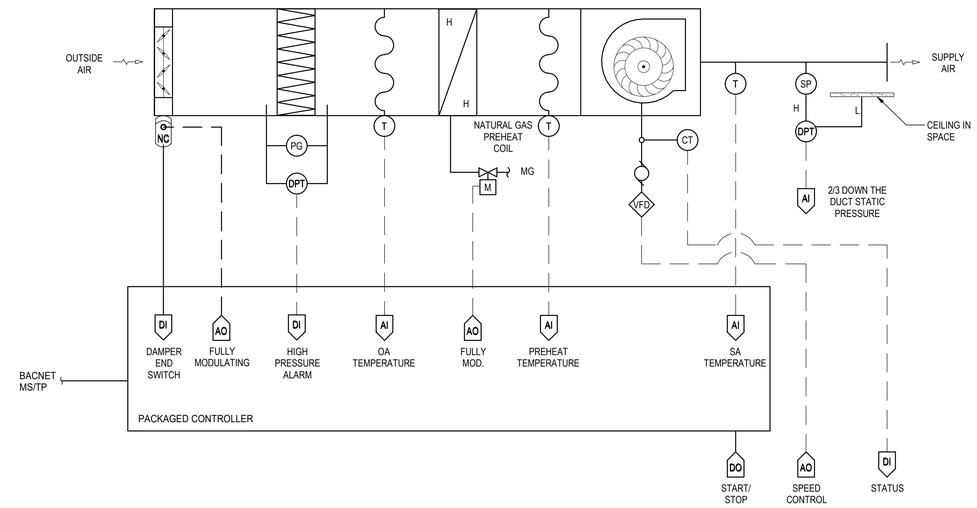

GENERAL EXHAUST EMCS POINTS LIST

TAG	NAME/FUNCTION	AI	AO	DI	DO	REMARKS
1	EXHAUST FAN ENABLE/DISABLE				√	
2	EXHAUST FAN ALARM			√		

GENERAL EXHAUST ALARMS

DESIGNATION	POINT	PROTOCOL
EXHAUST FAN FAILURE	2	ALARM AT OPERATOR'S SYSTEM TERMINAL.

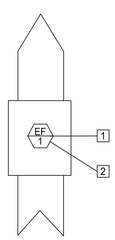

SEQUENCE OF OPERATION
APPLIES TO ALL EXHAUST FANS

OCCUPIED MODE:
EQUIPMENT SHALL OPERATE CONTINUOUSLY IN OCCUPIED (ENABLED) MODE. EF-X SHALL BE NORMALLY OFF.

1 M-008 **EXHAUST CONTROL DIAGRAM**
NOT TO SCALE

TYPICAL MAKEUP AIR UNIT

MAKEUP AIR HANDLER SEQUENCE OF OPERATION

GENERAL
1. ALL HAND-OFF-AUTO (HOA) SWITCHES NORMALLY REMAIN IN THE AUTO POSITION AND THE HAND AND OFF POSITIONS ARE USED FOR MAINTENANCE SITUATIONS. ALL SETPOINTS, DEADBANDS, AND TIME DELAY INTERVALS DESCRIBED IN SEQUENCE SHALL BE ADJUSTABLE BY SYSTEM OPERATORS. APPROPRIATE DEADBANDS AND TIME DELAYS SHALL BE USED TO PREVENT SHORT CYCLING SITUATIONS.
2. PROVIDE AND INSTALL ALL NECESSARY COMPONENTS AND ACCESSORIES FOR A COMPLETE AND OPERATIONAL SYSTEM INCLUDING, BUT NOT LIMITED TO SENSORS, RELAYS, COMMUNICATION WIRING AND CONDUIT, AND ALL NECESSARY ELECTRICAL DEVICES, WIRING, AND CONDUIT.
3. ALL MAKEUP AIR UNITS (MAU) SHALL INTERLOCK WITH EXHAUST FANS. REFER TO FLOOR PLANS FOR FURTHER DETAILS.

SCHEDULING
THE MAU SHALL HAVE SCHEDULING FUNCTIONALITY THROUGH THE DDC SYSTEM.

START UP MODE
1. UPON STARTUP OF EXHAUST FANS, DDC SHALL ISSUE COMMAND TO MAH FOR STARTUP.
2. THE OUTSIDE AIR DAMPER SHALL OPEN TO MINIMUM POSITION. THE DAMPER END-SWITCH SHALL VERIFY THAT THE DAMPER IS NOT CLOSED PRIOR TO ENERGIZING THE SUPPLY FAN.
3. THE SUPPLY FAN SHALL BE ENERGIZED.

SUPPLY FAN CONTROL
1. THE SUPPLY FAN IS ENERGIZED AND RUNS CONTINUOUSLY.
2. DDC MONITORS THE SUPPLY FAN THROUGH ITS CURRENT SENSOR. UPON A FAILURE, AN ALARM IS ISSUED.

SAFETY CONTROL
1. IF SMOKE IS DETECTED IN THE AIRSTREAM BY A DUCT SMOKE DETECTOR OR THE FIRE ALARM ZONE MODULE INDICATES A ZONE ALARM, THE SYSTEM SHALL BE DEACTIVATED

FILTER MONITORING
1. DDC SHALL MONITOR THE AIR FILTER PRESSURE DROP AND ISSUE A DIRTY FILTER ALARM UPON HIGH DIFFERENTIAL PRESSURE.

VENTILATION
1. DDC SHALL MODULATE SUPPLY FAN TO MAINTAIN A SPACE PRESSURE SET POINT.

2 M-008 **CONTROL DIAGRAM - MAKEUP AIR UNIT**
NOT TO SCALE

LICENSED PROFESSIONAL ENGINEER
SELVAK GALSTIAN
M-39730
EXP. 12/31/25
MECHANICAL
STATE OF CALIFORNIA

REPLACEMENT OF MECHANICAL UNITS AT SANTA ANA BUS BASE
4301 W. MAC ARTHUR BLVD., SANTA ANA, CA

MECHANICAL CONTROLS

JOB #:	
DESIGN BY:	SG
DRAWN BY:	RW
CHECKED BY:	GY
DATE:	
SCALE:	NOT TO SCALE
SHEET:	M-008F

OCTA

ORANGE COUNTY
TRANSPORTATION AUTHORITY
550 SOUTH MAIN STREET, ORANGE, CA

Autodesk Docs://2014233703_Santa_Ana_Bus/mech_SantaAnaBus_2014233703.rvt

5/8/2024 11:15:04 AM

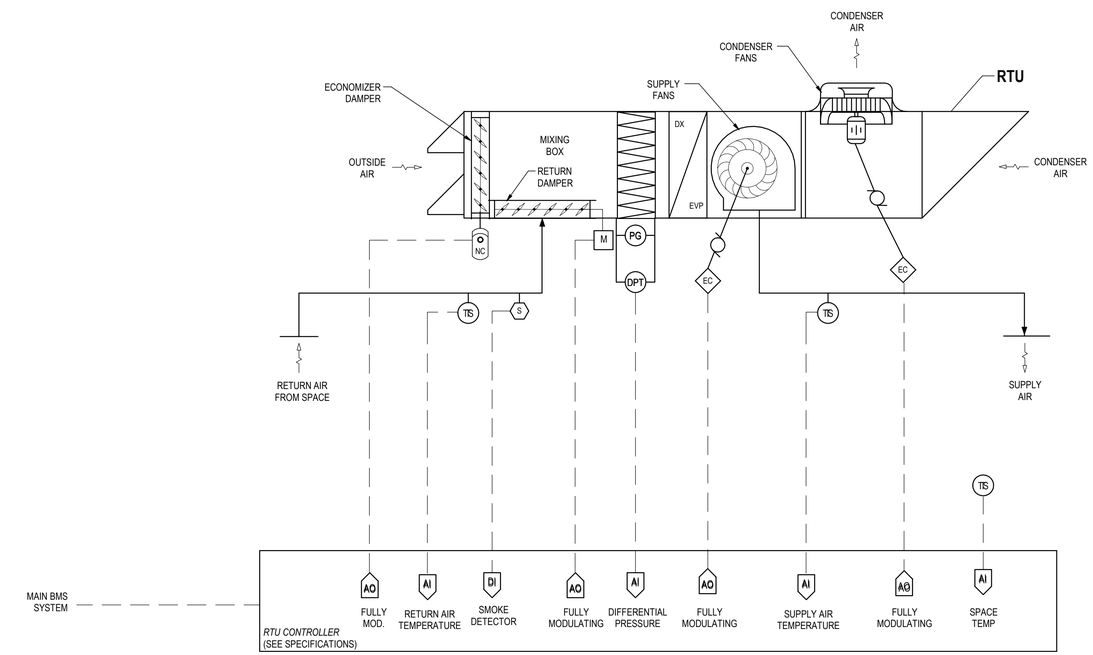

TYPICAL ROOFTOP UNIT

SEQUENCE OF OPERATION

GENERAL

1. ALL HAND-OFF-AUTO (HOA) SWITCHES NORMALLY REMAIN IN THE AUTO POSITION AND THE HAND AND OFF POSITIONS ARE USED FOR MAINTENANCE SITUATIONS. ALL SETPOINTS, DEADBANDS, AND TIME DELAY INTERVALS DESCRIBED IN SEQUENCE SHALL BE ADJUSTABLE BY SYSTEM OPERATORS. APPROPRIATE DEADBANDS AND TIME DELAYS SHALL BE USED TO PREVENT SHORT CYCLING SITUATIONS.
2. PROVIDE AND INSTALL ALL NECESSARY COMPONENTS AND ACCESSORIES FOR A COMPLETE AND OPERATIONAL SYSTEM INCLUDING, BUT NOT LIMITED TO SENSORS, RELAYS, COMMUNICATION WIRING AND CONDUIT, AND ALL NECESSARY ELECTRICAL DEVICES, WIRING, AND CONDUIT.

START-UP

1. THE ROOFTOP UNIT SHALL BE ACTIVATED BY THE MECHANICAL CONTROLLER AND SHALL RUN CONTINUOUSLY.
2. THE UNIT SHALL MONITOR AND LOG ALL SENSOR INPUTS.

SUPPLY FAN CONTROL

1. THE SUPPLY FAN IS ENERGIZED AND RUNS CONTINUOUSLY.
2. CONTROLLER SHALL MODULATE THE SUPPLY FAN SPEED BETWEEN MANUFACTURER'S ESTABLISHED RANGE TO MAINTAIN SPACE TEMPERATURE SETPOINT.
3. DDC MONITORS THE SUPPLY FAN THROUGH ITS CURRENT SENSOR. UPON A FAILURE, AN ALARM IS ISSUED.

ROOFTOP UNIT OPERATION

1. CONTROLLER SHALL PROVIDE ALL CONTROL OF SUPPLY FANS, CONDENSER FANS, MODULATING DAMPERS, COOLING COIL, REHEAT COIL, COMPRESSOR, AND ASSOCIATED COMPONENTS OF THE RTU UNIT.
2. ROOFTOP UNIT SHALL PROVIDE CONTINUOUS COOLING TO THE OFFICE SPACE BASED ON A 15-MIN AVERAGE RETURN AIR TEMPERATURE.
3. ROOFTOP UNIT SHALL PROVIDE ADJUSTABLE DISCHARGE AIR TEMPERATURE.

FILTER MONITORING

1. THE UNIT CONTROLLER SHALL MONITOR THE AIR FILTER DIFFERENTIAL PRESSURE DROP AND ISSUE A DIRTY FILTER ALARM UPON HIGH DIFFERENTIAL PRESSURE.

SAFETY CONTROL

1. IF SMOKE IS DETECTED IN THE AIRSTREAM BY A DUCT SMOKE DETECTOR OF THE FIRE ALARM ZONE MODULE INDICATES A ZONE ALARM, THE UNIT SHUTS DOWN. REFER TO SHUTDOWN MODE. IF A CONTROLLING SENSOR IS DETERMINED TO HAVE FAILED THAT WOULD DAMAGE THE EQUIPMENT OR CAUSE INAPPROPRIATE CONDITIONS IN THE SPACE, THE UNIT SHUTS DOWN. REFER TO SHUTDOWN MODE

SHUTDOWN MODE CONTROL

1. UPON A SHUTDOWN COMMAND FROM THE UNIT CONTROLLER OR A SAFETY CONTROL DEVICE COMMAND, THE UNIT COMMENCES SHUTDOWN.
2. THE SUPPLY FAN AND CONDENSER FAN ARE COMMANDED OFF.
3. THE RETURN AIR DAMPER IS MODULATES TO FULLY OPEN AND THE OUTSIDE AIR DAMPER MODULATES TO FULLY CLOSED.

SET POINTS

1. COOLING DISCHARGE AIR TEMPERATURE SETPOINT	55 F	(ADJ)
2. ROOM DIFFERENTIAL PRESSURE	+0.025 INWC	(ADJ)
3. ROOM DIFFERENTIAL PRESSURE TIME DELAY	1 MIN	(ADJ)

1 / M-009

CONTROL DIAGRAM - ROOF-MOUNTED PACKAGE UNIT WITH EXTERNAL POWERED ECONOMIZER

NOT TO SCALE

LICENSED PROFESSIONAL ENGINEER SEVAK GALSTYAN M-39730 EXP. 12/31/25 MECHANICAL STATE OF CALIFORNIA

Stantec
801 S. Figueroa Street, Suite 300
Los Angeles, CA 90017

Copyright Reserved
The Contractor shall verify and be responsible for all dimensions. DO NOT scale the drawing - any errors or omissions shall be reported to Stantec without delay.
This drawing is the property of Stantec and shall not be reproduced in whole or in part without permission. Reproduction or use for any purpose other than that authorized by Stantec is forbidden.

REVISION	DESCRIPTION	DATE
	100% RESUBMITTAL	5/13/2024
	100% CONSTRUCTION DRAWING SUBMITTAL	3/27/2024
	90% UPDATED CONSTRUCTION SUBMITTAL	2/13/2024
	90% CONSTRUCTION DRAWING SUBMITTAL	12/07/2023

REPLACEMENT OF MECHANICAL UNITS AT SANTA ANA BUS BASE
4301 W. MAC ARTHUR BLVD., SANTA ANA, CA

MECHANICAL CONTROLS

JOB #:	
DESIGN BY:	SG
DRAWN BY:	RW
CHECKED BY:	GY
DATE:	
SCALE:	NOT TO SCALE
SHEET:	M-009F

OCTA
ORANGE COUNTY TRANSPORTATION AUTHORITY
550 SOUTH MAIN STREET, ORANGE, CA

Autodesk Docs://2014233703_Santa_Ana_Bus/mech_SantaAnaBus_2014233703.rvt
5/8/2024 11:15:04 AM

IFB 4-2550 EXHIBIT B

GENERAL NOTES

1. COORDINATE LOCATIONS OF ALL EQUIPMENT AND ROUTING OF ALL DUCTWORK AND PIPING WITH OTHER TRADES PRIOR TO ANY ROUGH-IN. PROVIDE OFFSETS AND TRANSITIONS WHERE REQUIRED TO ACCOMODATE BUILDING CONDITIONS AND PRESERVE HEADROOM.
2. INSTALL AND ROUTE CONDENSATE PIPING FOR ROOFTOP HVAC EQUIPMENT AND ROUTE AT LEAST 12 FEET AWAY FROM UNIT IN DIRECTION OF ROOF SLOPE AND ROOF DRAINS, MIN 1% PIPE SLOPE.
3. INSTALL EQUIPMENT LEVEL ON ROOF.
4. MAINTAIN MINIMUM OF 10'-0" OF HORIZONTAL DISTANCE BETWEEN BUILDING OUTDOOR AIR INTAKE AND BUILDING EXHAUST AIR AND PLUMBING VENTS.
5. EXISTING ROOF CURB AND DUCT TO BE REUSED. CONTRACTOR TO PROVIDE CURB ADAPTER FOR NEW EQUIPMENT PER SCHEDULE.

Keynote Legend

Key Value	Keynote Text
M:01	EXISTING MECHANICAL EQUIPMENT.
M:02	INSTALL NEW SUPPLY FAN AND RECONNECT TO EXISTING DUCTWORK BELOW
M:03	INSTALL NEW EXHAUST FAN AND RECONNECT TO EXISTING DUCTWORK BELOW
M:04	INSTALL NEW HEAT PUMP AND RECONNECT TO EXISTING DUCTWORK BELOW
M:05	INSTALL NEW ROOFTOP UNIT AND RECONNECT TO EXISTING DUCTWORK BELOW
M:06	INSTALL NEW AIR CONDITIONING UNT AND RECONNECT TO EXISTING DUCTWORK BELOW

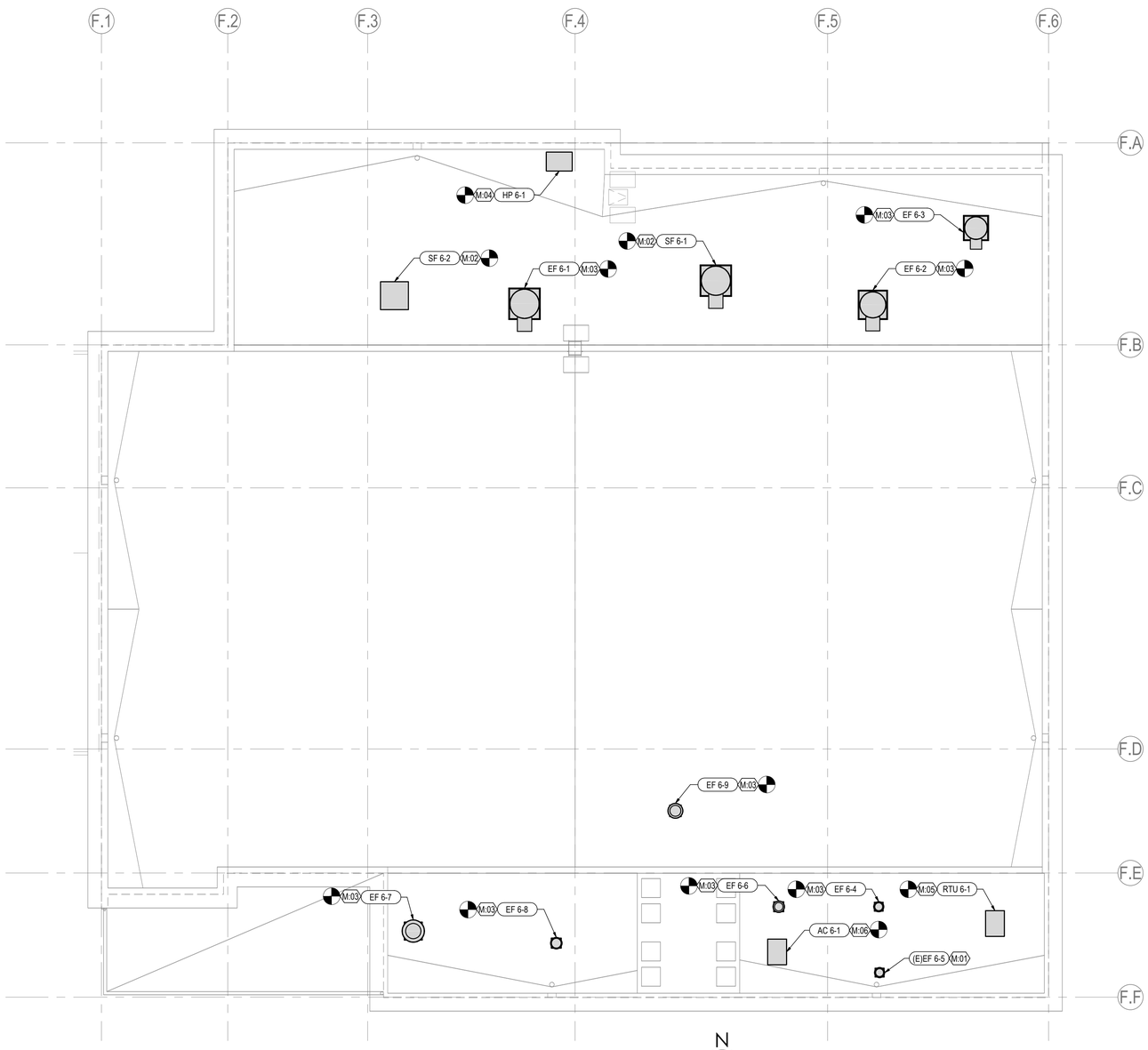

1 M-220 **FUEL/BRAKE/TIRE REPAIR BUILDING MECHANICAL ROOF PLAN**

3/32" = 1'-0"

LICENSED PROFESSIONAL ENGINEER SEVAK GALSTYAN M-39730 EXP. 03/31/25 MECHANICAL STATE OF CALIFORNIA

Stantec

801 S. Figueroa Street, Suite 300
Los Angeles, CA 90017

Copyright Reserved
The Contractor shall verify and be responsible for all dimensions. DO NOT scale the drawing, any errors or omissions shall be reported to Stantec without delay.
The copyright in the design and information shown on this drawing is the property of Stantec. Reproduction or use for any purpose other than that authorized by Stantec is forbidden.

REVISION	DESCRIPTION	DATE
	100% RESUBMITTAL	5/13/2024
	100% CONSTRUCTION DRAWING SUBMITTAL	3/27/2024
	90% UPDATED CONSTRUCTION SUBMITTAL	2/13/2024
	90% CONSTRUCTION DRAWING SUBMITTAL	12/07/2023

REPLACEMENT OF MECHANICAL UNITS AT SANTA ANA BUS BASE
4301 W. MAC ARTHUR BLVD., SANTA ANA, CA

FUEL/BRAKE/TIRE REPAIR BUILDING MECHANICAL ROOF PLAN

JOB #:	
DESIGN BY:	SG
DRAWN BY:	RW
CHECKED BY:	GY
DATE:	
SCALE:	As indicated
SHEET:	M-220F

OCTA

ORANGE COUNTY TRANSPORTATION AUTHORITY
550 SOUTH MAIN STREET, ORANGE, CA

Autodesk Docs://2014233703_Santa_Ana_Bus/mech_SantaAnaBus_2014233703.rvt

5/8/2024 11:15:07 AM

STATE OF CALIFORNIA

Mechanical Systems

CALIFORNIA ENERGY COMMISSION

CERTIFICATE OF COMPLIANCE			NRCC-MCH-E
This document is used to demonstrate compliance for mechanical systems that are within the scope of the permit application and are demonstrating compliance using the prescriptive path outlined in 140.4, or 141.0(b)2 for alterations.			
Project Name:	Santa Ana Bus Station	**Report Page:**	**(Page 1 of 9)**
Project Address:	4301 W. MacArthur Blvd, Santa Ana, CA, 92704	**Date Prepared:**	2023-12-05T15:51:16-05:00

A. GENERAL INFORMATION

01	Project Location (city)	Santa Ana, CA	04	Total Conditioned Floor Area	265000
02	Climate Zone	8	05	Total Unconditioned Floor Area	0
03	Occupancy Types Within Project:		06	# of Stories (Habitable Above Grade)	1

• All Other Occupancies

B. PROJECT SCOPE

This table Includes mechanical systems or components that are within the scope of the permit application and are demonstrating compliance using the prescriptive path outlined in 140.4, 170.2(b) or 141.0(b)2 and 180.2(b)2 for alterations.

01		02		03	
Air System(s)		Wet System Components		Dry System Components	
☒	Heating Air System	☐	Water Economizer	☐	Air Economizer
☒	Cooling Air System	☐	Pumps	☐	Electric Resistance Heat
Mechanical Controls		☐	System Piping	☐	Fan Systems
☒	Mechanical Controls (existing to remain, altered or new)	☐	Cooling Towers	☐	Ductwork (existing to remain, altered or new)
		☐	Chillers	☐	Ventilation
		☐	Boilers	☐	Zonal Systems/ Terminal Boxes

STATE OF CALIFORNIA

Mechanical Systems

CALIFORNIA ENERGY COMMISSION

CERTIFICATE OF COMPLIANCE			NRCC-MCH-E
Project Name:	Santa Ana Bus Station	**Report Page:**	**(Page 2 of 9)**
		Date Prepared:	2023-12-05T15:51:16-05:00

C. COMPLIANCE RESULTS

Table C will indicate if the project data input into the compliance document is compliant with mechanical requirements. This table is not editable by the user. If this table says "DOES NOT COMPLY" or "COMPLIES with Exceptional Conditions" refer to Table D., or the table indicated as not compliant for guidance.

01		02		03		04		05		06		07		08	09
System Summary 110.1, 110.2, 140.4, 170.2(c)	AND	Pumps 140.4(k), 170.2(c)4I	AND	Fans/ Economizers 140.4(c), 140.4(e), 170.2(c)	AND	System Controls 110.2, 120.2, 140.4(f), 170.2(c)	AND	Ventilation 120.1, 160.2	AND	Terminal Box Controls 140.4(d), 170.2(c)4B	AND	Distribution 120.3, 140.4(l), 160.2, 160.3	AND	Cooling Towers 110.2(e)2	Compliance Results
(See Table F)		(See Table G)		(See Table H)		(See Table I)		(See Table J)		(See Table K)		(See Table L)		(See Table M)	
Yes	AND		AND		AND	Yes	AND		AND		AND		AND		COMPLIES
Mandatory Measures Compliance (See Table Q for Details)									COMPLIES						

D. EXCEPTIONAL CONDITIONS

This table is auto-filled with uneditable comments because of selections made or data entered in tables throughout the form.

E. ADDITIONAL REMARKS

This table includes remarks made by the permit applicant to the Authority Having Jurisdiction.

F. HVAC SYSTEM SUMMARY (DRY & WET SYSTEMS)

Space Conditioning System Information

01	02	03	04	05	06
System Name	Quantity	System Serving	System Status	Space Type	Utilizing Recovered Heat
RTU 4-1	1	Multi-zone			☐
RTU 4-2	1	Single zone	Alteration		☐
RTU 4-3	1	Single zone	Alteration		☐
RTU 4-4	1	Single zone	Alteration		☐

STATE OF CALIFORNIA

Mechanical Systems

CALIFORNIA ENERGY COMMISSION

CERTIFICATE OF COMPLIANCE			NRCC-MCH-E
Project Name:	Santa Ana Bus Station	**Report Page:**	**(Page 3 of 9)**
		Date Prepared:	2023-12-05T15:51:16-05:00

F. HVAC SYSTEM SUMMARY (DRY & WET SYSTEMS)

Space Conditioning System Information

01	02	03	04	05	06
System Name	Quantity	System Serving	System Status	Space Type	Utilizing Recovered Heat
RTU 5-1	1	Multi-zone			☐
RTU 5-2	1	Multi-zone			☐
RTU 6-1	1	Single zone	Alteration		☐
RTU 5-3	1	Multi-zone			☐

Dry System Equipment Sizing (includes air conditioners, condensers, heat pumps, VRF, furnaces and unit heaters and DOAS systems)

01	02	03	04	05	06	07	08	09	10	11
Name or Item Tag	Equipment Category per Tables 110.2, 140.4(a)2 and 170.2(c)3aii	Equipment Type per Tables 110.2 and Title 20	Smallest Size Available[1] 140.4(a) and 170.2(c)1	Equipment Sizing per Mechanical Schedule (kBtu/h) 140.4(a&b), 170.2(c)1 & 170.2(c)2						
				Heating Output[2,3]			Cooling Output[2,3]		Load Calculations[3,4]	
				Per Design (kBtu/h)	Rated (kBtu/h)	Supp. Heating Output (kBtu/h)	Sensible Per Design (kBtu/h)	Rated (kBtu/h)	Total Heating Load (kBtu/h)	Total Sensible Cooling Load (kBtu/h)
RTU 4-1	Furnace + AC	AC, air cooled, single pkg + warm-air central furnace, gas-fired	Yes	202	202	0	125.5	178	202	180
RTU 4-2	Furnace + AC	AC, air cooled, single pkg + warm-air central furnace, gas-fired	Yes	65	65	0	74	74	65	74
RTU 4-3	Furnace + AC	AC, air cooled, single pkg + warm-air central furnace, gas-fired	Yes	121	121	0	91	118	121	118
RTU 4-4	Furnace + AC	AC, air cooled, single pkg + warm-air central furnace, gas-fired	Yes	121	121	0	119	119	121	119
RTU 5-1	Furnace + AC	AC, air cooled, split + warm-air central furnace, gas-fired	Yes	202	202	0	149	182	202	182
RTU 5-2	Furnace + AC	AC, air cooled, single pkg + warm-air central furnace, gas-fired	Yes	202	202	0	128	179	202	179

STATE OF CALIFORNIA

Mechanical Systems

CALIFORNIA ENERGY COMMISSION

CERTIFICATE OF COMPLIANCE			NRCC-MCH-E
Project Name:	Santa Ana Bus Station	**Report Page:**	**(Page 4 of 9)**
		Date Prepared:	2023-12-05T15:51:16-05:00

F. HVAC SYSTEM SUMMARY (DRY & WET SYSTEMS)

Dry System Equipment Sizing (includes air conditioners, condensers, heat pumps, VRF, furnaces and unit heaters and DOAS systems)

01	02	03	04	05	06	07	08	09	10	11
RTU 6-1	Unitary Heat Pumps (no elec. resistance)	Air-cooled, pkg (1phase)	Yes	45	45	0	47	47	47	47
RTU 5-3	Furnace + AC	AC, air cooled, single pkg + warm-air central furnace, gas-fired	Yes	202	202	0	132	180	202	180

[1]FOOTNOTES: Equipment shall be the smallest size, within the available options of the desired equipment line, necessary to meet the design heating and cooling loads of the building per 140.4(a) and 170.2(c)1. Healthcare facilities are excepted.

[2]It is common practice to show rated output capacity on the equipment schedule. Sensible cooling output comes from specification sheet tables.

[3] If equipment is heating only, leave cooling output and load blank. If equipment is cooling only, leave heating output and load blank.

[4] Authority Having Jurisdiction may ask for load calculations used for compliance per 140.4(b) and 170.2(c).

Dry System Equipment Efficiency (other than Package Terminal Air Conditioners (PTAC) and Package Terminal Heat Pumps (PTHP), DX-DOAS and Dual Fuel Heat Pumps)

01	02	03	04	05	06	07	08	09
Name or Item Tag	Size Category (Btu/h)	Heating Mode				Cooling Mode		
		Rating Condition (°F)	Efficiency Unit	Minimum Efficiency Required per Tables 110.2 / Title 20	Design Efficiency	Efficiency Unit	Minimum Efficiency Required per Tables 110.2 / Title 20	Design Efficiency
RTU 4-1	>=135kBtuh cooling/ <225kBtuh heating		AFUE	0.8	0.81	EER IEER	10.8 14	10.8 14
RTU 4-2	>=65kBtuh cooling/ <225kBtuh heating		AFUE	0.8	0.81	EER IEER	11 14.6	11 14.6
RTU 4-3	>=65kBtuh cooling/ <225kBtuh heating		AFUE	0.8	0.81	EER IEER	11 14.6	11 14.6
RTU 4-4	>=65kBtuh cooling/ <225kBtuh heating		AFUE	0.8	0.81	EER IEER	11 14.6	11 14.6
RTU 5-1	>=135kBtuh cooling/ <225kBtuh heating		AFUE	0.8	0.81	EER IEER	10.8 14	11 14

STATE OF CALIFORNIA

Mechanical Systems

CALIFORNIA ENERGY COMMISSION

CERTIFICATE OF COMPLIANCE			NRCC-MCH-E
Project Name:	Santa Ana Bus Station	**Report Page:**	**(Page 5 of 9)**
		Date Prepared:	2023-12-05T15:51:16-05:00

F. HVAC SYSTEM SUMMARY (DRY & WET SYSTEMS)

Dry System Equipment Efficiency (other than Package Terminal Air Conditioners (PTAC) and Package Terminal Heat Pumps (PTHP), DX-DOAS and Dual Fuel Heat Pumps)

01	02	03	04	05	06	07	08	09
Name or Item Tag	Size Category (Btu/h)	Heating Mode				Cooling Mode		
		Rating Condition (°F)	Efficiency Unit	Minimum Efficiency Required per Tables 110.2 / Title 20	Design Efficiency	Efficiency Unit	Minimum Efficiency Required per Tables 110.2 / Title 20	Design Efficiency
RTU 5-2	>=135kBtuh cooling/ <225kBtuh heating		AFUE	0.8	0.81	EER IEER	10.8 14	10.8 14
RTU 6-1	<65,000		HSPF2	6.7	7	SEER2	13.4	13.4
RTU 5-3	>=135kBtuh cooling/ <225kBtuh heating		AFUE	0.8	0.81	EER IEER	10.8 14	10.8 14

G. PUMPS

This section does not apply to this project.

H. FAN SYSTEMS & AIR ECONOMIZERS

This section does not apply to this project.

STATE OF CALIFORNIA

Mechanical Systems

CALIFORNIA ENERGY COMMISSION

CERTIFICATE OF COMPLIANCE			NRCC-MCH-E
Project Name:	Santa Ana Bus Station	**Report Page:**	**(Page 6 of 9)**
		Date Prepared:	2023-12-05T15:51:16-05:00

I. SYSTEM CONTROLS

This table is used to demonstrate compliance with mandatory controls in 110.2 and 120.2 and prescriptive controls in 140.4(f) and (n), 170.2(c)4D 170.2(c)4L or requirements in 141.0(b)2E 180.2(b)2 for altered space conditioning systems.

01	02	03	04	05	06	07	08	09
System Name	System Zoning	Conditioned Floor Area Being Served (ft^2)	Thermostats 110.2(b) & (c)[1], 120.2(a) 160.3(a)2A or 141.0(b)2E & 180.2(b)2	Shut-Off Controls 120.2(e) & 160.3(a)2D	Isolation Zone Controls 120.2(g) & 160.3(a)2F	Demand Response 110.12 120.2(b) & 160.3(a)2B	Supply Air Temp. Reset 140.4(f) & 170.2(c)4D	Window Interlocks per 140.4(n) & 170.2(c)4D
BMS	Multi-zone	> 25,000 ft^2	EMCS	EMCS	EMCS	EMCS	Included	NA: No operable windows

[1]FOOTNOTES: Gravity gas wall heaters, gravity floor heaters, gravity room heaters, non-central electric heaters, fireplaces or decorative gas appliances, wood stoves are not required to have setback thermostats.

J. VENTILATION AND INDOOR AIR QUALITY

This section does not apply to this project.

K. TERMINAL BOX CONTROLS

This section does not apply to this project.

L. DISTRIBUTION (DUCTWORK and PIPING)

This section does not apply to this project.

M. COOLING TOWERS

This section does not apply to this project.

Stantec
801 S. Figueroa Street, Suite 300
Los Angeles, CA 90017

Copyright Reserved
The Contractor shall verify and be responsible for all dimensions. DO NOT scale the drawing - any errors or omissions shall be reported to Stantec without delay.
The Copyrights to all designs and drawings are the property of Stantec. Reproduction or use for any purpose other than that authorized by Stantec is forbidden.

REVISION	DESCRIPTION	DATE
	90% CONSTRUCTION DRAWING SUBMITTAL	12/07/2023
	90% UPDATED CONSTRUCTION SUBMITTAL	2/13/2024
	100% CONSTRUCTION DRAWING SUBMITTAL	3/27/2024
	100% RESUBMITTAL	5/13/2024

REPLACEMENT OF MECHANICAL UNITS AT SANTA ANA BUS BASE

4301 W. MAC ARTHUR BLVD., SANTA ANA, CA

TITLE 24 CODE COMPLIANCE

JOB #:	
DESIGN BY:	SG
DRAWN BY:	RW
CHECKED BY:	GY
DATE:	
SCALE:	
SHEET:	M-300F

LICENSED PROFESSIONAL ENGINEER SEVAK GALSTYAN M 39730 EXP. 12/31/25 MECHANICAL STATE OF CALIFORNIA

OCTA
ORANGE COUNTY TRANSPORTATION AUTHORITY
550 SOUTH MAIN STREET, ORANGE, CA

Autodesk Docs://2014233703_Santa_Ana_Bus/mech_SantaAnaBus_2014233703.rvt
5/8/2024 11:15:08 AM

STATE OF CALIFORNIA
Mechanical Systems
CALIFORNIA ENERGY COMMISSION

CERTIFICATE OF COMPLIANCE		NRCC-MCH-E
Project Name: Santa Ana Bus Station	Report Page:	(Page 7 of 9)
	Date Prepared:	2023-12-05T15:51:16-05:00

N. DECLARATION OF REQUIRED CERTIFICATES OF INSTALLATION

Selections have been made based on information provided in previous tables of this document. If any selection needs to be changed, please explain why in Table E Additional Remarks. These documents must be provided to the building inspector during construction and can be found online at https://www.energy.ca.gov/programs-and-topics/programs/building-energy-efficiency-standards/2022-building-energy-efficiency-4

Form/Title
NRCI-MCH-01-E - Must be submitted for all buildings

O. DECLARATION OF REQUIRED CERTIFICATES OF ACCEPTANCE

Selections have been made based on information provided in previous tables of this document. If any selection needs to be changed, please explain why in Table E Additional Remarks. These documents must be provided to the building inspector during construction and can be found online at https://www.energy.ca.gov/title24/2019standards/2019_compliance_documents/Nonresidential_Documents/NRCA/

Form/Title	Systems/Spaces To Be Field Verified
NRCA-MCH-16-A Supply Air Temperature Reset Controls	BMS
NRCA-MCH-18-A Energy Management Control Systems	BMS

P. DECLARATION OF REQUIRED CERTIFICATES OF VERIFICATION

There are no NRCV forms required for this project.

STATE OF CALIFORNIA
Mechanical Systems
CALIFORNIA ENERGY COMMISSION

CERTIFICATE OF COMPLIANCE		NRCC-MCH-E
Project Name: Santa Ana Bus Station	Report Page:	(Page 8 of 9)
	Date Prepared:	2023-12-05T15:51:16-05:00

Q. MANDATORY MEASURES DOCUMENTATION LOCATION

This table is used to indicate where mandatory measures are documented in the plan set or construction documentation.

01		02
Compliance with Mandatory Measures documented through MCH Mandatory Measures Note Block	No	Plan sheet or construction document location
03		04
Mandatory Measure		**Plan sheet or construction document location**
Heating Equipment Efficiency per 110.1		M-004 MECHANICAL SCHEDULES
Cooling Equipment Efficiency per 110.1		M-004 MECHANICAL SCHEDULES
Furnace Standby Loss Control per 110.2(d)		M-004 MECHANICAL SCHEDULES
Heat Pump with Supplemental electric Resistance Heater Controls per 110.2(b)		N/A

STATE OF CALIFORNIA
Mechanical Systems
CALIFORNIA ENERGY COMMISSION

CERTIFICATE OF COMPLIANCE		NRCC-MCH-E
Project Name: Santa Ana Bus Station	Report Page:	(Page 9 of 9)
Project Address: 4301 W. MacArthur Blvd, Santa Ana, CA, 92704	Date Prepared:	2023-12-05T15:51:16-05:00

DOCUMENTATION AUTHOR'S DECLARATION STATEMENT

I certify that this Certificate of Compliance documentation is accurate and complete.

Documentation Author Name: Ryan Walsh	Documentation Author Signature: Walsh, Ryan
Company: stantec	Signature Date: 12/5/2023
Address: 6385 Corporate Drive, Suite 200	CEA/ HERS Certification Identification (if applicable):
City/State/Zip: Colorado Springs, CO 80919	Phone: 860-964-0406

RESPONSIBLE PERSON'S DECLARATION STATEMENT

I certify the following under penalty of perjury, under the laws of the State of California:

1. The information provided on this Certificate of Compliance is true and correct.
2. I am eligible under Division 3 of the Business and Professions Code to accept responsibility for the building design or system design identified on this Certificate of Compliance (responsible designer)
3. The energy features and performance specifications, materials, components, and manufactured devices for the building design or system design identified on this Certificate of Compliance conform to the requirements of Title 24, Part 1 and Part 6 of the California Code of Regulations.
4. The building design features or system design features identified on this Certificate of Compliance are consistent with the information provided on other applicable compliance documents, worksheets, calculations, plans and specifications submitted to the enforcement agency for approval with this building permit application.
5. I will ensure that a completed signed copy of this Certificate of Compliance shall be made available with the building permit(s) issued for the building, and made available to the enforcement agency for all applicable inspections. I understand that a completed signed copy of this Certificate of Compliance is required to be included with the documentation the builder provides to the building owner at occupancy.

Responsible Designer Name: Ryan Walsh	Responsible Designer Signature: Walsh, Ryan
Company: stantec	Date Signed: 12/5/2023
Address: 6385 Corporate Drive, Suite 200	License: N/A
City/State/Zip: Colorado Springs, CO 80919	Phone: 860-964-0406

LICENSED PROFESSIONAL ENGINEER
SIYAR GALSTYAN
M-39730
EXP. 12/31/25
MECHANICAL
STATE OF CALIFORNIA

IFB 4-2550 EXHIBIT B

Stantec
801 S. Figueroa Street, Suite 300
Los Angeles, CA 90017

Copyright Reserved
This drawing and all ideas and size are responsible for all dimensions. DO NOT scale the drawing. Any errors or omissions should be reported to Stantec without delay.
This drawing is the property of Stantec and shall not be reproduced in whole or in part. Reproduction or use for any purpose other than that authorized by Stantec is forbidden.

REVISION	DESCRIPTION	DATE
	100% RESUBMITTAL	5/13/2024
	100% CONSTRUCTION DRAWING SUBMITTAL	3/27/2024
	90% UPDATED CONSTRUCTION SUBMITTAL	2/13/2024
	90% CONSTRUCTION DRAWING SUBMITTAL	12/07/2023

REPLACEMENT OF MECHANICAL UNITS AT SANTA ANA BUS BASE
4301 W. MAC ARTHUR BLVD., SANTA ANA, CA

TITLE 24 CODE COMPLIANCE

JOB #:	
DESIGN BY:	SG
DRAWN BY:	RW
CHECKED BY:	GY
DATE:	
SCALE:	
SHEET:	M-301F

OCTA
ORANGE COUNTY TRANSPORTATION AUTHORITY
550 SOUTH MAIN STREET, ORANGE, CA

Autodesk Docs://2014233703_Santa_Ana_Bus/mech_SantaAnaBus_2014233703.rvt
5/8/2024 11:15:08 AM

CIRCUITS
EMERGENCY NORMAL

RECEPTACLES

- SINGLE RECEPTACLE, 120V
- SINGLE RECEPTACLE, 120V, CEILING MOUNTED
- DUPLEX RECEPTACLE, 120V
- DUPLEX RECEPTACLE, 120V, CEILING MOUNTED
- DOUBLE DUPLEX RECEPTACLE, 120V
- DOUBLE DUPLEX RECEPTACLE, 120V, CEILING MOUNTED
- SPLIT WIRED RECEPTACLE, 120V, TOP CONTROLLED, BOTTOM CONSTANTLY ENERGIZED
- RECEPTACLE, NEMA #
- RECEPTACLE, NEMA #, CEILING MOUNTED
- COMBINATION RECEPTACLE, NEMA # AND 120V
- FURNITURE SYSTEMS RECEPTACLE, 120V
- N/A INDICATES FULLY CONTROLLED
- N/A INDICATES 15A
- N/A INDICATES TWIST LOCK
- N/A INDICATES MOUNTED ABOVE COUNTER BACKSPLASH
- N/A MULTI-SERVICE ASSEMBLY (RECEPTACLES AS INDICATED)
- N/A MULTI-SERVICE CEILING BOX (RECEPTACLES AS INDICATED)
- N/A MULTI-SERVICE FLOOR BOX (RECEPTACLES AS INDICATED)
- N/A MULTI-SERVICE FURNITURE BOX (RECEPTACLES AS INDICATED)
- N/A MULTI-SERVICE POKE THRU (RECEPTACLES AS INDICATED)
- N/A MULTI-SERVICE POWER POLE (RECEPTACLES AS INDICATED)
- N/A MULTI-SERVICE WALL BOX (RECEPTACLES AS INDICATED)
- N/A PLUG STRIP (HORIZONTAL/VERTICAL)
- N/A CLOCK RECEPTACLE, 120V
- CORD DROP, 120V
- CEILING CORD DROP, 120V

RECEPTACLE TYPES

- A ARC FAULT CIRCUIT INTERRUPTER
- AT ARC FAULT CIRCUIT INTERRUPTER AND TAMPER RESISTANT
- D DEDICATED CIRCUIT
- G GROUND FAULT CIRCUIT INTERRUPTER
- GT GROUND FAULT CIRCUIT INTERRUPTER AND TAMPER RESISTANT
- IG ISOLATED GROUND
- S SURGE PROTECTOR
- T TAMPER RESISTANT
- U INTEGRAL USB PORT(S)
- WP WEATHER RESISTANT COVER

CONTROLS

- NON-FUSED SAFETY SWITCH
- FUSED SAFETY SWITCH, FUSE RATING INDICATED
- COMBINATION MOTOR STARTER AND FUSED SAFETY SWITCH, FUSE RATING INDICATED
- MOTOR STARTER
- MANUAL MOTOR STARTER
- AUTOMATIC DOOR PUSHPLATE
- DEAD FRONT GFCI
- EMERGENCY SHUTDOWN
- ENCLOSED CIRCUIT BREAKER
- ENCLOSED CONTACTOR
- PUSH BUTTON CONTROL STATION
- $M TOGGLE SWITCH, MOTOR RATED
- TOUCHLESS AUTOMATIC DOOR OPENER
- DDC DIRECT DIGITAL CONTROL PANEL
- R RELAY
- T THERMOSTAT
- TC TIME CLOCK
- VFD VARIABLE FREQUENCY DRIVE

WORK DEFINITION

- NEW WORK
- EXISTING
- REMOVE EXISTING
- REMOVE EXISTING ELECTRICAL EQUIPMENT
- FUTURE
- TEMPORARY, AS NOTED
- ?##/## KEY NOTE
- ??? EQUIPMENT IDENTIFICATION
- XX/X-X MECHANICAL EQUIPMENT IDENTIFICATION

RACEWAYS

- RACEWAY CONCEALED IN CEILING OR WALL. EXPOSED RACEWAY IS ALLOWED ONLY WHERE NOTED.
- RACEWAY BELOW SLAB OR UNDERGROUND
- RACEWAY UP
- RACEWAY DOWN
- RACEWAY CONTINUATION
- RACEWAY STUB-OUT WITH BUSHING
- SURFACE RACEWAY (HORIZONTAL/VERTICAL)
- J JUNCTION BOX, CEILING OR ABOVE CEILING MOUNTED
- J JUNCTION BOX, WALL MOUNTED
- J JUNCTION BOX, IN-GROUND
- PB PULL BOX

ELECTRICAL EQUIPMENT

- 208V OR 240V POWER PANELBOARD
- 480V OR 600V POWER PANELBOARD
- EQUIPMENT CABINET OR PANEL
- EQUIPMENT CONNECTION, FILL INDICATES EMERGENCY CIRCUIT
- GROUND BAR
- MOTOR CONNECTION, 1Ø
- MOTOR CONNECTION, 3Ø
- BUS DUCT
- ATS AUTOMATIC TRANSFER SWITCH
- B BUS DUCT PLUG
- SPD SURGE PROTECTIVE DEVICE
- T TRANSFORMER, NOT TO SCALE
- TRANSFORMER, DRAWN TO SCALE

ABBREVIATIONS

#/C	MULTI-CONDUCTOR, # INDICTATES QUANTITY
(D)	DEMOLISH
(E)	EXISTING
(N)	NEW
(R)	EXISTING TO BE RELOCATED
1/C	SINGLE CONDUCTOR
A	AMPS
A/C	AIR CONDITIONING UNIT
AC	ALTERNATING CURRENT
ACH	ABOVE COUNTER HEIGHT
ACT	ACOUSTICAL CEILING TILE
ADA	AMERICANS WITH DISABILITIES ACT
ADJ	ADJUSTABLE
AF	AMP FRAME
AFC	ABOVE FINISHED CEILING
AFCI	ARC FAULT CIRCUIT INTERRUPTER
AFF	ABOVE FINISHED FLOOR
AFG	ABOVE FINISHED GRADE
AHJ	AUTHORITY HAVING JURISDICTION
AHU	AIR HANDLING UNIT
AIC	AMPERE INTERRUPTING CAPACITY
AL	ALUMINUM
ALD	ASSISTED LISTENING DEVICE
ALT	ALTERNATE
ARCH	ARCHITECTURAL
AS	AMP SWITCH
AT	AMP TRIP
ATS	AUTOMATIC TRANSFER SWITCH
AUTO	AUTOMATIC
AV	AUDIO VISUAL
AVG	AVERAGE
AWG	AMERICAN WIRE GAUGE
BC	BONDING CONDUCTOR
BCU	BARE COPPER
BFC	BELOW FINISHED CEILING
BFG	BELOW FINISHED GRADE
BKR	BREAKER
BLDG	BUILDING
BOF	BOTTOM OF FIXTURE
BOH	BACK OF HOUSE
BTM	BOTTOM
C	CONDUIT
C/W	COMPLETE WITH
CAP	CAPACITY
CATV	COMMUNITY ANTENNA TELEVISION
CB	CIRCUIT BREAKER
CCTV	CLOSED CIRCUIT TELEVISION
CEC	CANADIAN ELECTRIC CODE
CFOI	CONTRACTOR FURNISHED, OWNER INSTALLED
CIRC	CIRCULATING
CKT	CIRCUIT
CL	CENTERLINE
CLG	CEIILING
CM	CEIILING MOUNTED
CMU	CONCRETE MASONRY UNIT
CO	CONDUIT ONLY
COMM	COMMUNICATIONS
CONC	CONCRETE
CONN	CONNECTION
CONST	CONSTRUCTION
CONT	CONTINUOUS
CONTR	CONTRACTOR
CPT	CONTROL POWER TRANSFORMER
CPU	CENTRAL PROCESSING UNIT
CR	CRITICAL BRANCH
CT	CURRENT TRANSFORMERS
CTR	CENTER
CU	COPPER
CUH	CABINET UNIT HEATER
D	DEDICATED
DALI	DIGITAL ADDRESSABLE LIGHTING INTERFACE
DC	DIRECT CURRENT
DET	DETAIL
DIA	DIAMETER
DIM	DIMENSION
DISC	DISCONNECT
DIV	DIVISION
DL	DAMP LOCATION
DMX	DIGITAL MULTIPLEX
DMX-RDM	DIGITAL MULTIPLEX REMOTE DEVICE MANAGEMENT
DN	DOWN
DP	DISTRIBUTION PANEL
DPDT	DOUBLE POLE, DOUBLE THROW
DPR	DAMPER
DPST	DOUBLE POLE, SINGLE THROW
DWG	DRAWING
DWH	DOMESTIC WATER HEATER
EA	EACH
EC	ELECTRICAL CONTRACTOR
EF	EXHAUST FAN
ELEC	ELECTRICAL
ELEV	ELEVATOR
EM	EMERGENCY
EM GEN	EMERGENCY GENERATOR
EMT	ELECTRICAL METALLIC TUBING
ENCL	ENCLOSURE
EP	ELECTRIC-PNEUMATIC
EPO	EMERGENCY POWER OFF
EQ	EQUIPMENT BRANCH
EQUIP	EQUIPMENT

ABBREVIATIONS

ETD	EMERGENCY TRANSFER DEVICE
EWC	ELECTRIC WATER COOLER
EXH	EXHAUST
EXP	EXPLOSION PROOF
EXTER	EXTERIOR
F&I	FURNISHED AND INSTALLED
FA	FIRE ALARM
FAA	FIRE ALARM ANNUNCIATOR
FACP	FIRE ALARM CONTROL PANEL
FB	FLOOR BOX
FCU, FC	FAN COIL UNIT
FLR	FLOOR
FLUOR	FLUORESCENT
FO	FIBER (FIBRE) OPTIC
FOH	FRONT OF HOUSE
FP	FIRE PROTECTION
FPC	FORWARD PHASE CONTROL
FS	FUSIBLE SWITCH
FSCS	FIRE FIGHTER SMOKE CONTROL STATION
FU	FUSE
FVNR	FULL VOLTAGE NON REVERSING
FVR	FULL VOLTAGE REVERSING
G, GND	GROUND
G/Y	GREEN YELLOW
GA	GAUGE
GAL	GALLONS
GC	GENERAL CONTRACTOR
GEN	GENERATOR
GFI, GFCI	GROUND FAULT (CIRCUIT) INTERRUPTER
H	HOT CONDUCTOR
HC	HORIZONTAL CROSS CONNECT
HD	HAND DRYER
HFF	HANDS FREE FIXTURE
HH	HANDHOLE
HID	HIGH INTENSITY DISCHARGE
HK	HOUSE KEEPING PAD
HM	HORIZONTALLY MOUNTED
HOA	HAND-OFF-AUTO
HOR	HORIZONTAL
HP	HEAT PUMP
HP	HORSEPOWER
HT	HEATING
HV	HIGH VOLTAGE
HVCB	HIGH VOLTAGE CIRCUIT BREAKER
HW	HOT WATER
HZ	HERTZ
IC	INTERMEDIATE CROSS CONNECT
ID	INSIDE DIAMETER
IDF	INTERMEDIATE DISTRIBUTION FRAME
IG	ISOLATED GROUND
IMC	INTERMEDIATE METAL CONDUIT
INST	INSTANTANEOUS
IP	INTERNET PROTOCOL
JB	JUNCTION BOX
K	KIRK KEY INTERLOCK
KAIC	KILO-AMPS INTERRUPTING CAPACITY
KV	KILOVOLT
KVA	KILOVOLT-AMPERES
KW	KILOWATT
LED	LIGHT EMITTING DIODE
LR	LEGALLY REQUIRED
LS	LIFE SAFETY BRANCH
LSIG	LONG TIME, SHORT TIME, INSTANTANEOUS, GROUND FAULT LIGHTING
LTG	LIGHTING
LV	LOW VOLTAGE
MAU	MAKE UP AIR UNIT
MAX	MAXIMUM
MC	METAL CLAD CABLE
MCA	MINIMUM CIRCUIT AMPS
MCB	MAIN CIRCUIT BREAKER
MCC	MOTOR CONTROL CENTER
MCCB	MOLDED CASE CIRCUIT BREAKER
MCP	MOTOR CIRCUIT PROTECTOR
MCT	MAIN CROSS CONNECT
MDF	MAIN DISTRIBUTION FRAME
MDP	MAIN DISTRIBUTION PANEL
MECH	MECHANICAL
MET	MAIN EARTHING TERMINAL
MFR	MANUFACTURER
MH	MANHOLE
MIN	MINIMUM
MISC	MISCELLANEOUS
MLO	MAIN LUG ONLY
MM	MULTIMODE FIBER (FIBRE) OPTIC STRAND
MSB	MAIN SWITCHBOARD
MTD	MOUNTED
MTG	MOUNTING
MTS	MAIN TERMINAL SPACE
MV	MEDIUM VOLTAGE
MVCB	MEDIUM VOLTAGE CIRCUIT BREAKER
MW	MICROWAVE OVEN
N	NEUTRAL
NAC	NOTIFICATION APPLIANCE CIRCUIT
NC	NORMALLY CLOSED
NEC	NATIONAL ELECTRIC CODE
NEMA	NATIONAL ELECTRICAL MANUFACTURERS ASSOCIATION

ABBREVIATIONS

NIC	NOT IN CONTRACT
NL	NIGHT LIGHT
NO	NORMALLY OPEN
NTS	NOT TO SCALE
OC	ON CENTER
OD	OUTSIDE DIAMETER
OFCI	OWNER FURNISHED, CONTRACTOR INSTALLED
OFE	OWNER FURNISHED EQUIPMENT
OH	OVERHEAD
OL	OVERLOAD
OS	OCCUPANCY SENSOR, OPTIONAL STANDBY
OSP	OUTSIDE PLANT
P	POLE
PA	PUBLIC ADDRESS
PB	PULL BOX
PD	PUNCHDOWN
PF	POWER FACTOR
PNL	PANEL
POE	POINT OF ENTRANCE
POS	POINT OF SERVICE
PR	PAIR
PT	POTENTIAL TRANSFORMERS
PTS	PNEUMATIC TUBE STATION
PTZ	PAN/TILT/ZOOM
PV	PHOTOVOLTAIC
PVC	POLYVINYL CHLORIDE
PWR	POWER
RA	RETURN AIR
REC	RECESSED
RECP	RECEPTACLE
REQD	REQUIRED
REX	REQUEST TO EXIT
RM	ROOM
RNC	RIGID NON-METALLIC CONDUIT
RO	RACEWAY ONLY
RPC	REVERSE PHASE CUT
RSC, RGS	RIGID STEEL CONDUIT
SCCR	SHORT CIRCUIT CURRENT RATING
SEC	SECURITY
SECT	SECTION
SIM	SIMILAR
SM	SINGLE MODE FIBER OPTIC STRAND
SMR	SURFACE MOUNTED RACEWAY
SPD	SURGE PROTECTED DEVICE
SPDT	SINGLE POLE DOUBLE THROW
SPECS	SPECIFICATIONS
SPST	SINGLE POLE SINGLE THROW
SS	STAINLESS STEEL
ST	SHUNT TRIP
STD	STANDARD
SW	SWITCH
SWBD	SWITCHBOARD
SWGR	SWITCHGEAR
SYS	SYSTEM
TBB	TELECOMMUNICATIONS BACKBONE
TC	TEMPERATURE CONTROL OR TERMINAL CABINET
TE	TELECOMMUNICATIONS ENCLOSURE
TELE	TELEPHONE
TELECOM	TELECOMMUNICATIONS
TEMP	TEMPERATURE
TERM	TERMINAL
TGB	TELECOMMUNICATIONS GROUND BAR
TMGB	TELECOMMUNICATIONS MAIN GROUND BAR
TOF	TOP OF FIXTURE
TP	TAMPER RESISTANT
TR	TELECOMMUNICATIONS ROOM
TSP	TWISTED SHIELDED PAIR
TSTAT	THERMOSTAT
TTB	TELECOM TERMINAL BOARD
TV	TELEVISION
TYP	TYPICAL
UG	UNDERGROUND
UH	UNIT HEATER
UNO	UNLESS NOTED OTHERWISE
UNV	UNIVERSAL VOLTAGE
UPS	UNINTERRUPTIBLE POWER SUPPLY
USB	UNIVERSAL SERIAL BUS
UTP	UNSHIELDED TWISTED PAIR
UV	UNIT VENTILATOR
V	VOLTS
VA	VOLT-AMPS
VAV	VARIABLE AIR VOLUME
VC	VOLUME CONTROL
VDT	VISUAL DISPLAY TERMINAL
VERT	VERTICAL
VFD	VARIABLE FREQUENCY DRIVE
VIF	VERIFY IN FIELD
VOL	VOLUME
VT	VAPOR TIGHT
W	WIRE, WATT
WAP	WIRELESS ACCESS POINT
WG	WIREGUARD
WL	WET LOCATION
WP	WEATHERPROOF
WT	WATERTIGHT
XFMR	TRANSFORMER
Ø, PH	PHASE

PROJECT NOTES

1. THE ELECTRICAL CONTRACTOR SHALL OBTAIN ALL NECESSARY PERMITS FROM AUTHORITIES HAVING JURISDICTION AND PAY ALL ASSOCIATED FEES.
2. LOCATE JUNCTION AND PULL BOXES AS REQUIRED TO ALLOW ACCESS AFTER EQUIPMENT AND APPURTENANCES ARE INSTALLED. COORDINATE EXACT LOCATIONS WITH THE OTHER TRADES. COORDINATE LOCATIONS AND ELEVATIONS OF ELECTRICAL DEVICES WITH DRAWINGS AND OTHER TRADES PRIOR TO INSTALLATION.
3. PROTECT PERMANENT BUILDING FINISHES FROM DAMAGE DURING CONSTRUCTION PERIOD. PROVIDE PLYWOOD OR SIMILAR MATERIAL UNDER EQUIPMENT OR MATERIALS STORED ON FLOORS, AND IN AREAS WHERE CONSTRUCTION MAY DAMAGE FINISHES. SURFACES OR FINISHES DAMAGED DURING CONSTRUCTION SHALL BE REPLACED AT THE COST OF THE CONTRACTOR AT FAULT.
4. CONTRACTORS SHALL COORDINATE LOCATIONS OF FIXTURES AND ELECTRICAL DEVICES INSTALLED IN OR ON THE CEILING WITH ARCHITECTURAL REFLECTED CEILING PLAN. CEILING MOUNTED ELECTRICAL DEVICES SHALL BE MOUNTED IN THE CENTER OF THE CEILING TILES, UNLESS OTHERWISE NOTED.
5. WHERE DIRECTED TO USE OR RETAIN EXISTING CIRCUITS, AND THE CIRCUIT NUMBERS DIFFER FROM THE DRAWING, UPDATE DIRECTORIES AND RECORD DRAWINGS.
6. PROPERLY SUPPORT PER CODE LOW VOLTAGE CABLING NOT IN CONDUIT. IN AREAS SUCH AS CORRIDORS DESIGNATED FOR NEW CEILINGS AND FINISHES, SUPPORT EXISTING ELECTRICAL DEVICES AND EQUIPMENT IN AND ABOVE THE CEILING, INCLUDING CONDUIT AND CABLING. PROVIDE PROPER PERMANENT SUPPORT AS NEEDED TO COMPLY WITH CODE AND TAKE WEIGHT OFF CEILING SUPPORTS. REMOVE AND REINSTALL ELECTRICAL DEVICES AND EQUIPMENT AS NEEDED FOR PAINTING, WALL COVERINGS, CEILINGS, AND FINISH WORK. REFER TO ARCHITECTURAL DRAWINGS. LOW VOLTAGE CABLING LOCATED IN EXPOSED STRUCTURE (CEIILING) AREAS SHALL BE INSTALLED IN CONDUIT (OR CABLE TRAY, IF APPLICABLE) AND ROUTED TIGHT TO DECK. INSTALLATIONS NOT IN COMPLIANCE WITH THIS REQUIREMENT SHALL BE REMOVED AND REINSTALLED AT CONTRACTOR'S EXPENSE.
7. WHERE PROJECT PHASING IS INDICATED IN ANY PART OF THE WORKING DOCUMENT PACKAGE, ELECTRICAL CONTRACTOR IS TO PLAN WORK SO AS TO FACILITATE SUCH PHASING.
8. FOR BRANCH CIRCUITS OVER 75' (25 METERS) IN LENGTH (TOTAL ONE WAY) FROM THE PANEL, THE ELECTRICAL CONTRACTOR SHALL CALCULATE THE VOLTAGE DROP AND PROVIDE AN APPROPRIATE CONDUCTOR SIZE TO ACHIEVE NO MORE THAN 3% MAXIMUM ALLOWABLE VOLTAGE DROP.
9. DO NOT SCALE THE DRAWINGS. BECAUSE OF THE SCALE OF THE DRAWINGS, IT IS NOT POSSIBLE TO INDICATE ALL OFFSETS, FITTINGS OR OTHER SIMILAR ITEMS WHICH MAY BE REQUIRED TO MAKE A COMPLETE OPERATING SYSTEM. CAREFULLY INVESTIGATE CONDITIONS AFFECTING WORK AND INSTALL WORK IN SUCH MANNER THAT INTERFERENCES BETWEEN PIPES, CONDUITS, DUCTS, EQUIPMENT, ARCHITECTURAL AND STRUCTURAL FEATURES SHALL BE AVOIDED.

PROJECT DEMOLITION NOTES

1. ANY EXISTING WIRING SERVING DEVICES TO REMAIN IN SERVICE, AND WHICH IS INTERRUPTED BY WORK PERFORMED UNDER THIS CONTRACT, SHALL BE REROUTED TO MAINTAIN CIRCUIT CONTINUITY. ALL EXISTING SYSTEMS/DEVICES TO REMAIN. PRIOR TO COMMENCING WITH DEMOLITION, IDENTIFY ALL POWER, LIGHTING, COMMUNICATION, AND SIGNAL CIRCUITS PASSING THROUGH THE DEMOLITION AREA OR EXTENDING BEYOND THE DEMOLITION AREA. COORDINATE WITH DEMOLITION WORK OF OTHER TRADES.
2. THE EXISTING BUILDING MUST BE KEPT IN OPERATION AT ALL TIMES. MAINTAIN ELECTRICAL SERVICES AND SYSTEMS EXCEPT FOR EQUIPMENT BEING REPLACED BY THIS PROJECT. MAINTAIN CONTINUITY OF FIRE ALARM, LIFE SAFETY AND SECURITY SYSTEMS TO ALL OCCUPIED AREAS OF THE BUILDING THROUGHOUT THE CONSTRUCTION PERIOD. PROVIDE TEMPORARY WIRING AND BRANCH CIRCUITING AS NECESSARY TO MAINTAIN OPERATION OF EXISTING CIRCUITS AND SYSTEMS EXTENDING BEYOND REMODEL AREA. ASSUME FULL RESPONSIBILITY FOR ANY DISRUPTION TO EXISTING SERVICES. RECONNECT ANY SERVICES WHICH ARE TO REMAIN, AND WHICH HAVE BEEN DISCONNECTED DURING DEMOLITION OR CONSTRUCTION. ARRANGE WORK IN SUCH A MANNER THAT INTERRUPTIONS IN SERVICES OCCUR ONLY AT PRE-SCHEDULED TIMES. CARRY OUT THE WORK WITH A MINIMUM OF NOISE, DUST AND DISTURBANCE.
3. PERMANENTLY REMOVE ABANDONED ELECTRICAL EQUIPMENT, LIGHTING FIXTURES, ELECTRICAL DEVICES, POWER AND SIGNALLING WIRING DEVICES AND ASSOCIATED WIRE, RACEWAYS, AND/OR JUNCTION BOXES. THE REMOVAL OR RELOCATION OF EXISTING ELECTRICAL EQUIPMENT PRESENTLY CONCEALED IN EXISTING CONSTRUCTION SHALL BE COORDINATED WITH THE OWNER PRIOR TO REMOVAL OR RELOCATION. RACEWAYS AND CONDUCTORS SHALL BE REMOVED BACK TO THE SOURCE OR NEAREST REMAINING JUNCTION BOX OR DEVICE AS FAR AS PRACTICAL, OR WHERE COMPLETE REMOVAL NOT PRACTICAL, RENDERED PERMANENTLY SAFE.
4. ANY EXISTING SYSTEM OUTAGES SHALL BE OF MINIMUM DURATION AND AT A TIME ACCEPTABLE TO THE OWNER, ARRANGED A MINIMUM OF 10 WORKING DAYS IN ADVANCE. LONGER NOTICES AND/OR ADDITIONAL RESTRICTIONS PERTAINING TO OUTAGES MAY BE REQUIRED IN SOME INSTANCES, AS PER SPECIFICATIONS. VERIFY PROTOCOL WITH ALL PROJECT STAKEHOLDERS INCLUDING OWNER, TENANT, CONSTRUCTION MANAGER AND/OR USER GROUP(S) AS APPLICABLE.
5. ELECTRICAL EQUIPMENT, FIXTURES, AND/OR DEVICES SCHEDULED TO REMAIN OR TO BE RELOCATED THAT ARE DAMAGED DURING DEMOLITION SHALL BE REPLACED WITH SIMILAR TYPE AS APPROVED BY THE OWNER, AT NO ADDITIONAL CHARGE TO THE OWNER.
6. IN THE EVENT THAT DEMOLITION WORK AFFECTS THE STRUCTURAL SUPPORT OF EXISTING ELECTRICAL EQUIPMENT THAT IS TO REMAIN IN SERVICE, IT SHALL BE RE-SUPPORTED IN ACCORDANCE WITH ALL APPLICABLE CODES. PROVIDE TEMPORARY SUPPORTS WHERE REQUIRED.
7. UNUSED FLUSH MOUNTED DEVICES, OUTLET AND OTHER BOXES IN FINISHED AREAS SHALL BE REMOVED FROM WALL AND THE REMAINING HOLE PATCHED TO MATCH ADJACENT WALL SURFACES. UNUSED RACEWAYS AND SLEEVES SHALL BE CUT FLUSH AT CEILING, FLOOR OR WALL AND FILLED WITH GROUT OR REQUIRED FIRE SEALANT. UNUSED RACEWAYS ABOVE ACCESSIBLE CEILINGS SHALL BE REMOVED.
8. ELECTRICAL MATERIAL SCHEDULED FOR REMOVAL IS TO BE REMOVED FROM THE SITE AND PROPERLY DISPOSED OF AS PART OF THIS CONTRACT. ANY ELECTRICAL MATERIAL THE OWNER WISHES TO RETAIN TO BECOME THE PROPERTY OF THE OWNER AND TO BE REMOVED AND PLACED AT A LOCATION ON THE SITE AS DIRECTED BY THE OWNER.
9. THE DEMOLITION DRAWINGS SHOW THE GENERAL SCOPE OF THE DEMOLITION AND NOT EXACT DETAILS OR TOTAL EXTENT. FOR EXACT DETAILS AND TOTAL EXTENT, EACH SERVICE MUST BE CAREFULLY CHECKED ON SITE. BEFORE REMOVING SERVICES FOLLOW THE SERVICE THROUGH TO ENSURE OTHER AREAS OF THE BUILDING ARE NOT AFFECTED.

NEW THERMOSTATS FOR ALL NEW MECHANICAL UNITS ARE GOING TO BE PROVIDED BY MECHANICAL.
REFER TO GENERAL NOTES ON MECHANICAL SET OF DRAWINGS.

REGISTERED PROFESSIONAL ENGINEER
PAUL K. ERICSON
No. 11219
exp.06/30/2025
ELECTRICAL
STATE OF CALIFORNIA

05-13-2024

IFB 4-2550 EXHIBIT B

Stantec
801 S. Figueroa Street, Suite 300
Los Angeles, CA 90017

Copyright Reserved
The contractor shall verify and be responsible for all dimensions. DO NOT scale the drawing - any errors or omissions shall be reported to Stantec without delay.
The copyrights to all designs and drawings are the property of Stantec. Reproduction or use for any purpose other than that authorized by Stantec is prohibited.

REVISION	DESCRIPTION	DATE
4	100% RESUBMITTAL	05/13/2024
3	100% CONSTRUCTION DRAWING SUBMITTAL	03/27/2024
2	90% UPDATED CONSTRUCTION SUBMITTAL	02/13/2024
1	90% CONSTRUCTION DRAWING SUBMITTAL	12/07/2023

REPLACEMENT OF MECHANICAL UNITS AT SANTA ANA BUS BASE
4301 W. MAC ARTHUR BLVD., SANTA ANA, CA

SYMBOLS, NOTES AND ANNOTATIONS

JOB #:	
DESIGN BY:	IZ
DRAWN BY:	ERL
CHECKED BY:	PKE
DATE:	02/13/2024
SCALE:	12" = 1'-0"
SHEET:	E-001F

OCTA
ORANGE COUNTY TRANSPORTATION AUTHORITY
550 SOUTH MAIN STREET, ORANGE, CA

Autodesk Docs://2014233703_Santa_Ana_Bus/elec_SantaAnaBus_2014233703.rvt
5/8/2024 9:59:41 AM

SCHEMATICS

CABLE IDENTIFICATION, TABLE

C01 / 3 | 1 | 1

- CIRCUIT IDENTIFICATION, SEE FEEDER TABLE
  - A = ALUMINUM
  - C = COPPER
  - M = METAL CLAD
- QUANTITY OF GROUND CONDUCTORS, SIZE PER FEEDER TABLE
  - 0 = NOT REQUIRED
  - 1 = 1 GROUND CONDUCTOR
  - 2 = 1 GROUND CONDUCTOR AND 1 ISOLATED GROUND CONDUCTOR
- QUANTITY OF NEUTRAL CONDUCTORS, SIZE PER FEEDER TABLE
  - 0 = NOT REQUIRED
  - 1 = 1 NEUTRAL CONDUCTOR
  - 2 = 2 NEUTRAL CONDUCTORS
- QUANTITY OF PHASE CONDUCTORS, SIZE PER FEEDER TABLE

CABLE IDENTIFICATION, TEXT

4 #12+ 1 #12G, [SIZE]C

- CONDUIT SIZE
- QUANTITY AND SIZE OF GROUNDS
- QUANTITY AND SIZE OF CONDUCTORS

CABLE IDENTIFICATION, TEXT — CONDUIT SIZE

4 SETS (3×1/C 600 kcmil +1 #3/0G, Cu, 15kV, 133%, TR-XLPE, [SIZE]C)

- CABLE TYPE
- INSULATION LEVEL
- INSULATION VOLTS
- MATERIAL
- QUANTITY AND SIZE OF GROUNDS
- QUANTITY AND SIZE OF CONDUCTORS
- QUANTITY OF SETS

#×1/C — SINGLE CONDUCTOR CABLE, # INDICATES QUANTITY OF CABLES

#/C — MULTI-CONDUCTOR CABLE, # INDICATES QUANTITY OF CONDUCTORS

— SHORT CIRCUIT CURRENT RATING, # INDICATES RATING

BUS DUCT

BUS

FEEDER

PANEL, SINGLE TUB	PANEL, DOUBLE TUB, MAIN LUGS		PANEL, DOUBLE TUB, FEED THRU LUGS	
NAME LOCATION 225 A MCB 480 V 3 Ø, 4 W 42 CCT	NAME LOCATION 225 A MCB 480 V 3 Ø, 4 W 42 CCT	NAME	NAME LOCATION 225 A MCB 480 V 3 Ø, 4 W 42 CCT	NAME LOCATION 225 A MCB 480 V 3 Ø, 4 W 42 CCT

SCHEMATICS

- AC/DC INVERTER
- AUTOTRANSFORMER
- AUTOMATIC TRANSFER SWITCH, DUAL BYPASS
- AUTOMATIC TRANSFER SWITCH, SINGLE BYPASS
- BATTERY
- BIMETALLIC THERMAL OVERLOAD
- CAPACITOR
- CIRCUIT BREAKER, LOW VOLTAGE, DRAW OUT
- CIRCUIT BREAKER, LOW VOLTAGE, FIXED
- CIRCUIT BREAKER, LOW VOLTAGE, WITH LIMITER
- CIRCUIT BREAKER, MEDIUM VOLTAGE, DRAW OUT
- CIRCUIT BREAKER, MEDIUM VOLTAGE, FIXED
- CIRCUIT BREAKER, MEDIUM VOLTAGE, VACUUM INTERRUPTER
- CONNECTION, CONNECTED
- CONNECTION, DRAW OUT, DISCONNECTED
- CONNECTION, FEED FROM/TO
- CONNECTION, SPLICE
- CONTACT
- CURRENT TRANSFORMER
- DEAD BREAK ELBOW
- DRAW OUT FUSE AND POTENTIAL TRANSFORMER
- FUSE
- FUSED CUTOUT
- GROUND
- GROUND STUD
- INDUCTOR
- LIGHTNING ARRESTOR, GAP TYPE
- LIGHTNING ARRESTOR, MOV TYPE
- LOAD BREAK ELBOW
- NOT CONNECTED
- POTENTIAL TRANSFORMER
- POTHEAD
- STRESS CONE
- SWITCH, FUSED LOAD BREAK
- SWITCH, NON-FUSED LOAD BREAK
- SWITCH, NON-FUSED DOUBLE LOAD BREAK
- SWITCH, NON-FUSED LOAD BREAK WITH GROUNDING POSITION
- RESISTOR
- ? — TERMINAL BLOCK

SCHEMATICS

- TRANSFER SWITCH
- TRANSFORMER
- TRANSFORMER CONFIGURATION, DELTA
- TRANSFORMER CONFIGURATION, DELTA, CORNER GROUND
- TRANSFORMER CONFIGURATION, DELTA, OPEN
- TRANSFORMER CONFIGURATION, WYE
- TRANSFORMER CONFIGURATION, WYE, INDUCTOR, CURRENT TRANSFORMER, GROUND
- TRANSFORMER CONFIGURATION, WYE, RESISTOR, CURRENT TRANSFORMER, GROUND
- TRANSFORMER CONFIGURATION, WYE, RESISTOR, GROUND
- TRANSFORMER CONFIGURATION, WYE, SOLID GROUND
- TRANSFORMER CONFIGURATION, ZIGZAG
- ZERO SEQUENCE CURRENT TRANSFORMER
- 50 — RELAY, SINGLE FUNCTION
- 50/51 — RELAY, DUAL FUNCTION
- 50 50 50 / 50 50 50 — RELAY, MULTIFUNCTION
- A — AMMETER
- AS — AMPERAGE METER SWITCH
- DMS — DIGITAL METERING SYSTEM
- G — GENERATOR
- K — KEY OPERATED SWITCH
- LSIG — RELAY, TRIP UNIT
- LSIG — DRAW OUT BREAKER C/W INTEGRAL SOLID STATE TRIP UNIT
- LSIG — DRAW OUT BREAKER C/W SERIES ELECTROMECHANICAL TRIP UNIT
- M — INLINE SOCKET METER
- METER — METER
- O/L — ELECTRONIC THERMAL OVERLOAD
- SB — SHORTING BLOCK
- SPACE — SPACE, DRAW OUT BREAKER
- SPACE — SPACE, FIXED BREAKER
- SPD — SURGE PROTECTION DEVICE
- TS — TEST SWITCH
- V — VOLTMETER
- VS — VOLTAGE METER SWITCH
- X — INDICATOR, VOLTAGE PRESENT

STANDARD MOUNTING HEIGHTS

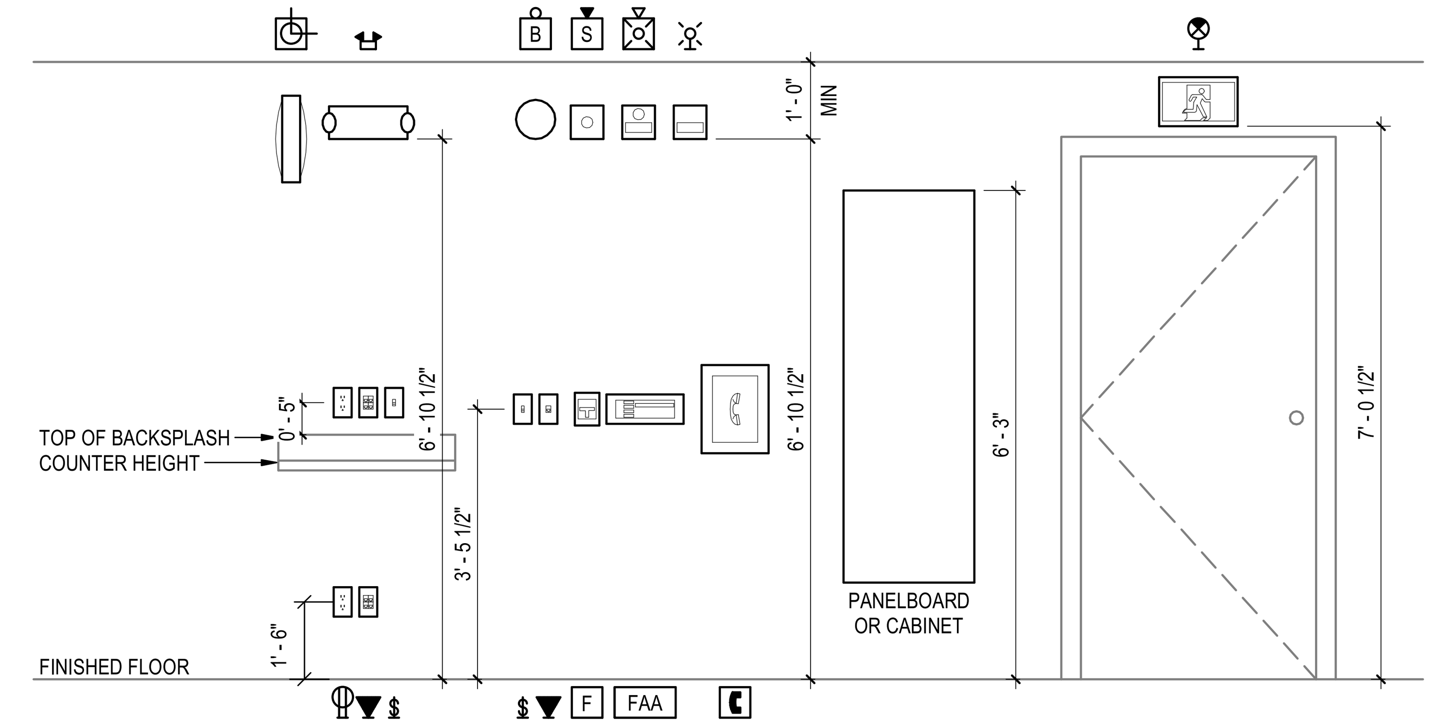

DRAWING INDEX

NO.	DRAWING NAME
E-001	SYMBOLS, NOTES AND ANNOTATIONS
E-002	SCHEMATIC SYMBOLS AND ELECTRICAL DRAWING INDEX
E-210	OPERATIONS BUILDING ELECTRICAL ROOF PLAN
E-220	MAINTENANCE BUILDING OVERALL ELECTRICAL ROOF PLAN
E-221	MAINTENANCE BUILDING SECTION ONE ELECTRICAL ROOF PLAN
E-222	MAINTENANCE BUILDING SECTION TWO ELECTRICAL ROOF PLAN
E-223	MAINTENANCE BUILDING SECTION THREE ELECTRICAL ROOF PLAN
E-230	FUEL/BRAKE/TIRE REPAIR BUILDING ELECTRICAL ROOF PLAN
E-240	BUS WASH/BRAKE DYNO BUILDING ELECTRICAL ROOF PLAN
E-250	DETAIL/CLEANING BUILDING ELECTRICAL ROOF PLAN
E-600	ELECTRICAL SINGLE LINE DIAGRAM
E-601	ELECTRICAL SINGLE LINE DIAGRAM
E-700	PANEL SCHEDULES
E-701	PANEL SCHEDULES
E-702	PANEL SCHEDULES
E-703	PANEL SCHEDULES
E-704	PANEL SCHEDULES
E-800	CONDUIT SCHEDULES
E-801	CONDUIT SCHEDULES
E-802	CONDUIT SCHEDULES

ALUMINUM FEEDERS

ID	NOMINAL CIRCUIT RATING	SETS	CONDUCTORS	GROUND	CONDUIT W/ N (4W)	CONDUIT W/O N (3W)
A01	100	1	#1/0	#6	2"	2"
A02	125	1	#2/0	#4	2"	2"
A03	150	1	#3/0	#4	2"	2"
A04	175	1	#4/0	#4	2 1/2"	2"
A05	200	1	250 kcmil	#4	2 1/2"	2 1/2"
A06	225	1	350 kcmil	#2	3"	2 1/2"
A07	250	1	350 kcmil	#2	3"	2 1/2"
A08	300	1	500 kcmil	#2	3 1/2"	3"
A09	350	1	750 kcmil	#1	4"	3 1/2"
A10	400	2	250 kcmil	#1	2 1/2"	2 1/2"
A11	450	2	350 kcmil	#1/0	3"	2 1/2"
A12	500	2	350 kcmil	#1/0	3"	2 1/2"
A13	600	2	500 kcmil	#2/0	3 1/2"	3"
A14	800	3	350 kcmil	#3/0	3"	3"
A15	900	3	500 kcmil	#4/0	3 1/2"	3"
A16	1000	3	600 kcmil	#4/0	4"	4"
A17	1200	4	500 kcmil	250 kcmil	3 1/2"	3"
A18	1600	6	400 kcmil	350 kcmil	3"	2 1/2"
A19	2000	6	750 kcmil	500 kcmil	4"	4"
A20	2500	7	750 kcmil	750 kcmil	5"	4"
A21	3000	8	750 kcmil	750 kcmil	5"	4"
A22	4000	11	750 kcmil	750 kcmil	5"	4"

FEEDER GENERAL NOTES:

1. COPPER CONDUCTORS ARE BASED ON TYPE THHN/THWN COPPER CONDUCTORS ONLY. CONDUITS BASED ON THHN/THWN CONDUCTORS ONLY. OTHER CONDUCTORS MAY REQUIRE LARGER CONDUITS.
2. ALUMINUM CONDUCTORS ARE BASED ON TYPE XHHN COMPACT STRANDED ALUMINUM CONDUCTORS ONLY. CONDUITS BASED ON XHHN CONDUCTORS ONLY. OTHER CONDUCTORS MAY REQUIRE LARGER CONDUITS.

COPPER FEEDERS

ID	NOMINAL CIRCUIT RATING	SETS	CONDUCTORS	BOND	CONDUIT W/ NEUTRAL (4W)	CONDUIT W/O NEUTRAL (3W)	MAXIMUM LENGTH*
C01	20	1	#12	#12	3/4"	3/4"	
C02	30	1	#10	#12	3/4"	3/4"	
C03	40	1	#8	#10	3/4"	3/4"	
C04	50	1	#6	#10	1"	3/4"	
C05A	60	1	#4	#10	1"	1"	*BASED ON 75 DEGREE
C05B	60	1	#4	#10	1 1/4"	1 1/4"	*BASED ON 60 DEGREE
C06	70	1	#4	#8	1 1/4"	1 1/4"	
C07A	80	1	#4	#8	1 1/4"	1 1/4"	*BASED ON 75 DEGREE
C07B	80	1	#3	#8	1 1/4"	1 1/4"	*BASED ON 60 DEGREE
C08	90	1	#3	#8	1 1/4"	1 1/4"	
C09A	100	1	#3	#8	1 1/4"	1 1/4"	*BASED ON 75 DEGREE
C09B	100	1	#1	#6	1 1/2"	1 1/2"	*BASED ON 60 DEGREE
C10	125	1	#1	#6	1 1/2"	1 1/2"	
C11	150	1	#1/0	#6	2"	1 1/2"	
C12	175	1	#2/0	#6	2"	2"	
C13	200	1	#3/0	#6	2"	2"	
C14	225	1	#4/0	#4	2 1/2"	2"	
C15	250	1	250 kcmil	#4	2 1/2"	2 1/2"	
C16	300	1	350 kcmil	#3	3"	2 1/2"	
C17	350	1	500 kcmil	#3	3 1/2"	3"	
C18	400	2	#3/0	#6	2"	2"	
C19	450	2	#4/0	#4	2 1/2"	2"	
C20	500	2	250 kcmil	#4	2 1/2"	2 1/2"	
C21	600	2	350 kcmil	#3	3"	2 1/2"	
C22A	800	3	350 kcmil	#3	3"	2 1/2"	
C22B	800	4	#3/0	#6	2"	2"	
C23	900	3	350 kcmil	#3	3"	2 1/2"	
C24	1000	3	500 kcmil	#3	3 1/2"	3"	
C25	1200	4	350 kcmil	#3	3"	2 1/2"	
C26	1600	5	500 kcmil	#3	3 1/2"	3"	
C27	2000	6	500 kcmil	#3	3 1/2"	3"	
C28	2500	7	500 kcmil	#3	3 1/2"	3"	
C29	3000	8	500 kcmil	#3	3 1/2"	3"	
C30	4000	11	500 kcmil	#3	3 1/2"	3"	

Stantec
801 S. Figueroa Street, Suite 300
Los Angeles, CA 90017

Copyright Reserved
The Contractor shall verify and be responsible for all dimensions. DO NOT scale the drawing - any errors or omissions shall be reported to Stantec without delay.
The Copyrights to all designs and drawings are the property of Stantec. Reproduction or use for any purpose other than that authorized by Stantec is forbidden.

REVISION	DESCRIPTION	DATE
4	100% RESUBMITTAL	05/13/2024
3	100% CONSTRUCTION DRAWING SUBMITTAL	03/27/2024
2	90% UPDATED CONSTRUCTION SUBMITTAL	02/13/2024
1	90% CONSTRUCTION DRAWING SUBMITTAL	12/07/2023

REPLACEMENT OF MECHANICAL UNITS AT SANTA ANA BUS BASE

4301 W. MAC ARTHUR BLVD., SANTA ANA, CA

SCHEMATIC SYMBOLS AND ELECTRICAL DRAWING INDEX

JOB #:
DESIGN BY: IZ
DRAWN BY: ERL
CHECKED BY: PKE
DATE: 02/13/2024
SCALE: As indicated
SHEET: E-002F

REGISTERED PROFESSIONAL ENGINEER
PAUL K. ERICSON
No. 11219
exp.06/30/2025
ELECTRICAL
STATE OF CALIFORNIA

05-13-2024

OCTA
ORANGE COUNTY TRANSPORTATION AUTHORITY
550 SOUTH MAIN STREET, ORANGE, CA

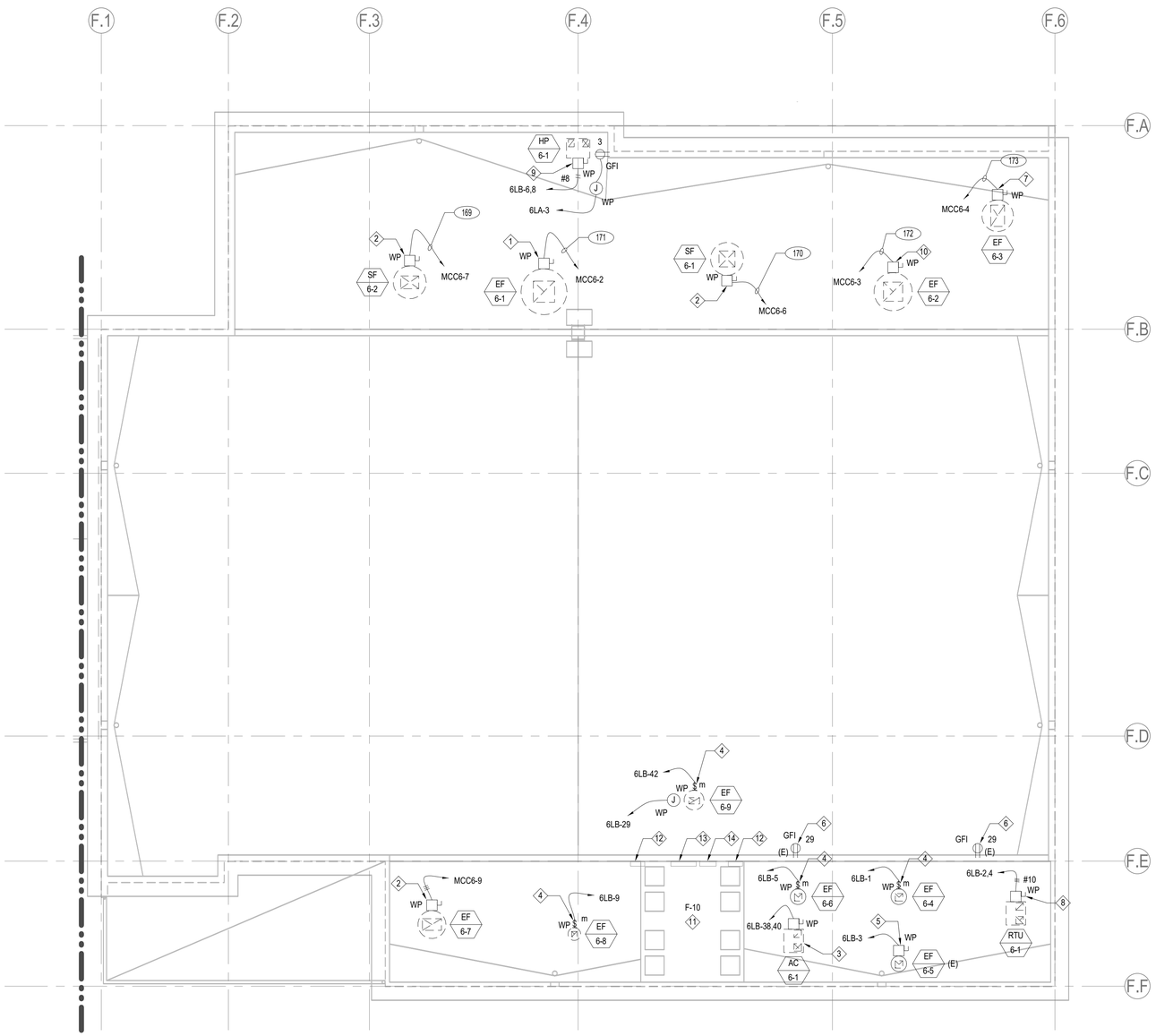

1 / E-230 FUEL/BRAKE/TIRE REPAIR BUILDING ELECTRICAL ROOF PLAN

3/32" = 1'-0"

N

GENERAL NOTES

1. ALL THE SIZES OF ELECTRICAL DISCONNECT SWITCHES, MOTOR RATED SWITCHES, CONDUIT AND WIRE SIZES FOR THE MECHANICAL EQUIPMENT ARE BASED ON NEW MECHANICAL EQUIPMENT THAT IS GOING TO BE INSTALLED.
2. ALL ELECTRICAL EQUIPMENT INSTALLED OUTDOORS SHALL BE IN WEATHER PROOF ENCLOSURES PER CEC 406.
3. REFER TO SHEETS E-800, E-801 AND E-802 CONDUIT SCHEDULES FOR VOLTAGE, PHASE, CONDUIT AND WIRE SIZES FOR ALL MECHANICAL EQUIPMENT BEING REPLACED.
4. NEW DISCONNECT SWITCHES TO BE PROVIDED AND INSTALLED TO MATCH EXISTING CONDITIONS.
5. KEY NOTES ARE PER SHEET NOT PER PROJECT.

KEY NOTES:

1 PROVIDE NEW 480V, 3PH, 60A DS, 50AF. CONNECT TO EXISTING CIRCUIT AS INDICATED, RE-USE EXISTING CONDUIT AND PROVIDE NEW CONDUCTORS TO MATCH EXISTING.

2 PROVIDE NEW 480V, 3PH, 30A DS, 15AF. CONNECT TO EXISTING CIRCUIT AS INDICATED, RE-USE EXISTING CONDUIT AND PROVIDE NEW CONDUCTORS TO MATCH EXISTING.

3 PROVIDE NEW 208V, 1PH, 30A DS, 25AF. CONNECT TO EXISTING CIRCUIT AS INDICATED, RE-USE EXISTING CONDUIT AND PROVIDE NEW CONDUCTORS TO MATCH EXISTING.

4 PROVIDE NEW 120V, 1PH, MOTOR RATED MANUAL SWITCH. CONNECT TO EXISTING CIRCUIT AS INDICATED, RE-USE EXISTING CONDUIT AND PROVIDE NEW CONDUCTORS TO MATCH EXISTING.

5 EXISTING MECHANICAL EQUIPMENT TO REMAIN. PRESERVE ALL ELECTRICAL CONNECTIONS, COVER UP DURING CONSTRUCTION TO PROTECT IN PLACE FROM DUST AND DAMAGE.

6 EXISTING RECEPTACLE TO REMAIN

7 PROVIDE NEW 480V, 3PH, 30A DS, 30AF. CONNECT TO EXISTING CIRCUIT AS INDICATED, RE-USE EXISTING CONDUIT AND PROVIDE NEW CONDUCTORS TO MATCH EXISTING.

8 PROVIDE NEW 208V, 1PH, 60A DS, 50AF. CONNECT TO EXISTING CIRCUIT AS INDICATED, RE-USE EXISTING CONDUIT AND PROVIDE NEW CONDUCTORS TO MATCH EXISTING.

9 PROVIDE NEW 208V, 1PH, 30A DS, 30AF. CONNECT TO EXISTING CIRCUIT AS INDICATED, RE-USE EXISTING CONDUIT AND PROVIDE NEW CONDUCTORS TO MATCH EXISTING.

10 PROVIDE NEW 480V, 3PH, 60A DS, 40AF.CONNECT TO EXISTING CIRCUIT AS INDICATED, RE-USE EXISTING CONDUIT AND PROVIDE NEW CONDUCTORS TO MATCH EXISTING.

11 ALL ELECTRICAL POWER CONNECTIONS AND ELECTRICAL EQUIPMENT USED FOR 'F-10' VACUUM SYSTEM IS EXISTING TO REMAIN.

12 EXISTING PNEWMATIC STACK DAMPER/DUST CONTROL PANEL.

13 MAIN ELECTRICAL CONTROL PANEL EXISTING TO REMAIN.

14 DUST CONTROL SYSTEM PANEL EXISTING TO REMAIN .

REGISTERED PROFESSIONAL ENGINEER
PAUL K. ERICSON
No. 11219
exp.06/30/2025
ELECTRICAL
STATE OF CALIFORNIA

05-13-2024

Stantec
801 S. Figueroa Street, Suite 300
Los Angeles, CA 90017

Copyright Reserved
The contractor shall verify and be responsible for all dimensions. DO NOT scale the drawing - any errors or omissions shall be reported to Stantec without delay.
This drawing is the property and copyright of Stantec and must not be altered or reproduced. Reproduction or use for any purpose other than that authorized by Stantec is forbidden.

REVISION	DESCRIPTION	DATE
4	100% RESUBMITTAL	05/13/2024
3	100% CONSTRUCTION DRAWING SUBMITTAL	03/27/2024
2	90% UPDATED CONSTRUCTION SUBMITTAL	02/13/2024
1	90% CONSTRUCTION DRAWING SUBMITTAL	12/07/2023

REPLACEMENT OF MECHANICAL UNITS AT SANTA ANA BUS BASE

4301 W. MAC ARTHUR BLVD., SANTA ANA, CA

FUEL/BRAKE/TIRE REPAIR BUILDING ELECTRICAL ROOF PLAN

JOB #:	
DESIGN BY:	IZ
DRAWN BY:	ERL
CHECKED BY:	PKE
DATE:	02/13/2024
SCALE:	As indicated
SHEET:	E-230F

OCTA

ORANGE COUNTY TRANSPORTATION AUTHORITY
550 SOUTH MAIN STREET, ORANGE, CA

Autodesk Docs://2014233703_Santa_Ana_Bus/elec_SantaAnaBus_2014233703.rvt
5/8/2024 9:59:45 AM

IFB 4-2550 EXHIBIT B

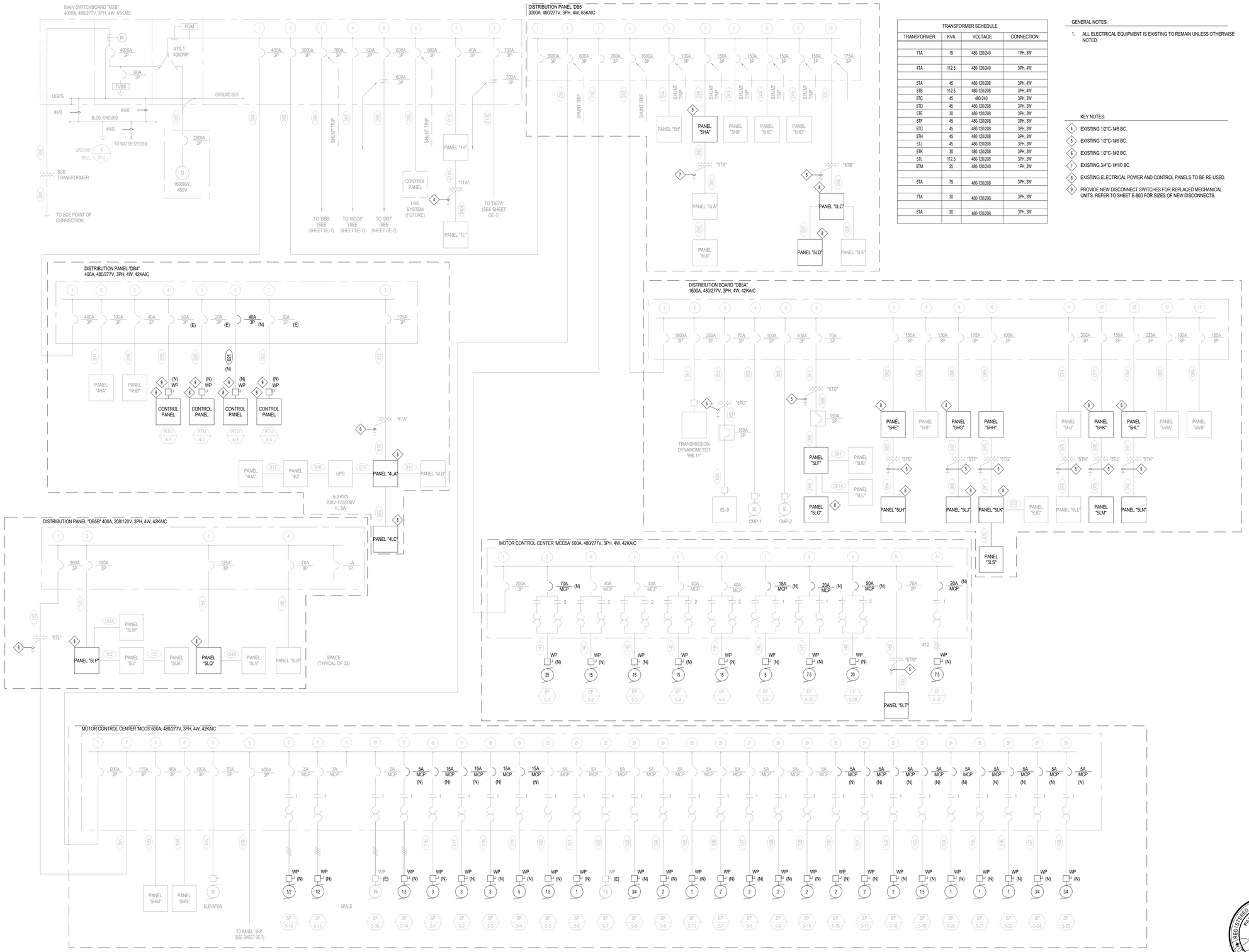

TRANSFORMER SCHEDULE			
TRANSFORMER	KVA	VOLTAGE	CONNECTION
1TA	15	480-120/240	1PH, 3W
4TA	112.5	480-120/240	3PH, 4W
5TA	45	480-120/208	3PH, 4W
5TB	112.5	480-120/208	3PH, 4W
5TC	45	480-240	3PH, 3W
5TD	45	480-120/208	3PH, 3W
5TE	30	480-120/208	3PH, 3W
5TF	45	480-120/208	3PH, 3W
5TG	45	480-120/208	3PH, 3W
5TH	45	480-120/208	3PH, 3W
5TJ	45	480-120/208	3PH, 3W
5TK	30	480-120/208	3PH, 3W
5TL	112.5	480-120/208	3PH, 3W
5TM	25	480-120/240	1PH, 3W
6TA	75	480-120/208	3PH, 3W
7TA	30	480-120/208	3PH, 3W
8TA	30	480-120/208	3PH, 3W

GENERAL NOTES:

1. ALL ELECTRICAL EQUIPMENT IS EXISTING TO REMAIN UNLESS OTHERWISE NOTED.

KEY NOTES:

4. EXISTING 1/2"C-1#8 BC.
5. EXISTING 1/2"C-1#6 BC.
6. EXISTING 1/2"C-1#2 BC.
7. EXISTING 3/4"C-1#1/0 BC.
8. EXISTING ELECTRICAL POWER AND CONTROL PANELS TO BE RE-USED.
9. PROVIDE NEW DISCONNECT SWITCHES FOR REPLACED MECHANICAL UNITS. REFER TO SHEET E-800 FOR SIZES OF NEW DISCONNECTS.

Stantec
801 S. Figueroa Street, Suite 300
Los Angeles, CA 90017

Copyright Reserved
The Contractor shall verify and be responsible for all dimensions. DO NOT scale the drawing - any errors or omissions shall be reported to Stantec without delay.
The Copyright Reserved shall be retained by the Stantec Corporation. Reproduction or use for any purpose other than that authorized by Stantec is forbidden.

REVISION	DESCRIPTION	DATE
4	100% RESUBMITTAL	05/13/2024
3	100% CONSTRUCTION DRAWING SUBMITTAL	03/27/2024
2	90% UPDATED CONSTRUCTION SUBMITTAL	02/13/2024
1	90% CONSTRUCTION DRAWING SUBMITTAL	12/07/2023

REPLACEMENT OF MECHANICAL UNITS AT SANTA ANA BUS BASE
4301 W. MAC ARTHUR BLVD., SANTA ANA, CA

ELECTRICAL SINGLE LINE DIAGRAM

JOB #:	
DESIGN BY:	IZ
DRAWN BY:	ERL
CHECKED BY:	PKE
DATE:	02/13/2024
SCALE:	NTS
SHEET:	E-600F

REGISTERED PROFESSIONAL ENGINEER
PAUL K. ERICSON
No. 11219
exp. 06/30/2025
ELECTRICAL
STATE OF CALIFORNIA

05-13-2024

OCTA
ORANGE COUNTY TRANSPORTATION AUTHORITY
550 SOUTH MAIN STREET, ORANGE, CA

Autodesk Docs://2014233703_Santa_Ana_Bus/elec_SantaAnaBus_2014233703.rvt

5/8/2024 9:59:45 AM

IFB 4-2550 EXHIBIT B

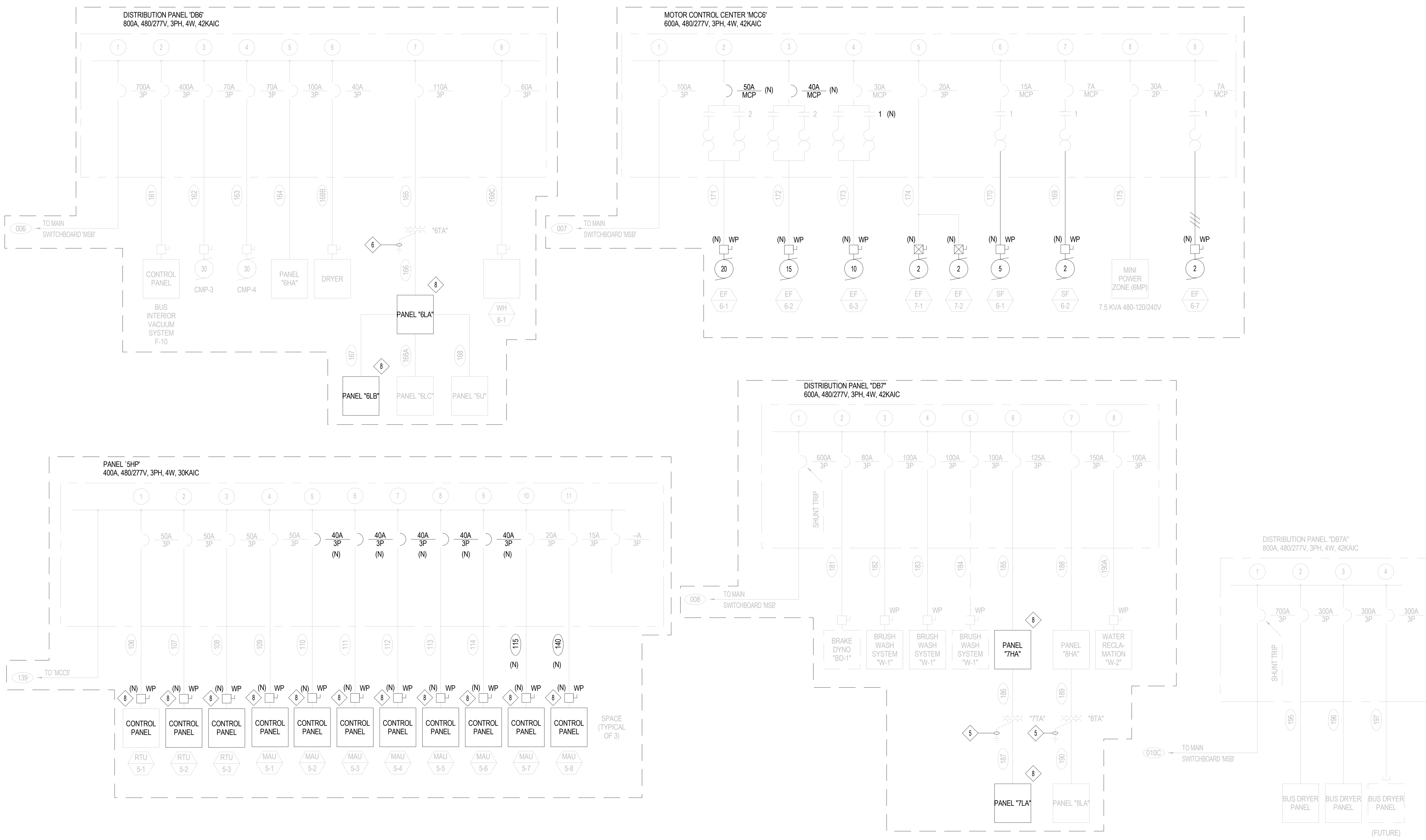

GENERAL NOTES:

1. ALL ELECTRICAL EQUIPMENT IS EXISTING TO REMAIN UNLESS OTHERWISE NOTED.

KEY NOTES:

4. EXISTING 1/2"C-1#8 BC.
5. EXISTING 1/2"C-1#6 BC.
6. EXISTING 1/2"C-1#2 BC.
7. EXISTING 3/4"C-1#1/0 BC.
8. EXISTING ELECTRICAL POWER AND CONTROL PANELS TO BE USED FOR REPLACED MECHANICAL UNITS.

DISTRIBUTION PANEL DB6

LOAD NAME	VOLTS	PH	CONNECTED HP	CONNECTED KVA	AMPS	REMARKS
F-10	480	3		253		
CMP-3	480	3	30	33		
CMP-4	480	3	30	33		
PANEL 6HA	480	3		53		
XFMR 6TA (PANEL 6LA)	480	3		68		
DRYER	480	3		21		
WH 6-1	480	3		36		
TOTAL	480	3		497	598	

MOTOR CONTROL CENTER MCC6

LOAD NAME	VOLTS	PH	CONNECTED HP	CONNECTED KVA	AMPS	REMARKS
EF 6-1	480	3	20	22.4		
EF 6-2	480	3	15	17.5		
EF 6-3	480	3	10	11.6		
EF 7-1, EF 7-2	480	3	2 x 2	5.6		
SF 6-1	480	3	5	6.3		
SF 6-2	480	3	2	2.8		
MINI POWER ZONE (6MP)	480	1		2.3		
EF 6-7	480	3	3	4.0		
TOTAL	480	3		72.5	87.2	

DISTRIBUTION PANEL DB7

LOAD NAME	VOLTS	PH	CONNECTED HP	CONNECTED KVA	AMPS	REMARKS
BD-1	480	3		45		
W-1	480	3		66		
W-1	480	3		66		
W-1	480	3		66		
PANEL 7HA	480	3		67		
PANEL 8HA	480	3		90		
W-2	480	3		36		
TOTAL	480	3		435	523	

DISTRIBUTION PANEL DB7A

LOAD NAME	VOLTS	PH	CONNECTED HP	CONNECTED KVA	AMPS	REMARKS
BUS DRYER PANEL	480	3	(9) 15	157		
BUS DRYER PANEL	480	3	(9) 15	157		
BUS DRYER PANEL	480	3	(9) 15	157		
TOTAL	480	3		471	567	

DISTRIBUTION PANEL DB5B

LOAD NAME	VOLTS	PH	CONNECTED HP	CONNECTED KVA	AMPS	REMARKS
PANEL 5LP	208	3		27		
PANEL 5LQ	208	3		36		
PANEL 5LR	208	3		19		
TOTAL	208	3		82	226	

MOTOR CONTROL CENTER MCC5A

LOAD NAME	VOLTS	PH	CONNECTED HP	CONNECTED KVA	AMPS	REMARKS
EF 5-1	480	3	25	28.3		
EF 5-2	480	3	15	17.5		
EF 5-3	480	3	15	17.5		
EF 5-4	480	3	15	17.5		
EF 5-5	480	3	15	17.5		
EF 5-6	480	3	5	6.3		
EF 5-25	480	3	7 1/2	9.1		
EF 5-28	480	3	20	22.4		
EF 5-37	480	3	7 1/2	9.1		
XFMR 5TM (PANEL 5LT)	480	1		18		
TOTAL	480	3		163.2	196.4	

DISTRIBUTION BOARD DB5A

LOAD NAME	VOLTS	PH	CONNECTED HP	CONNECTED KVA	AMPS	REMARKS
RB-11	480	3		150		
EL-9	480	3		43		
COMP. #1	480	3	50	54		
COMP. #2	480	3	50	54		
XFMR 5TD (PANEL 5LF)	480	3		45		
PANEL 5HE	480	3		73		
PANEL 5HF	480	3		79		
PANEL 5HG	480	3		115		
PANEL 5HH	480	3		45		
PANEL 5HJ	480	3		156		
PANEL 5HK	480	3		89		
PANEL 5HL	480	3		133		
PANEL 5WA	480	3		42		
PANEL 5WB	480	3		28		
TOTAL	480	3		1106	1330	

MOTOR CONTROL CENTER MCC5

LOAD NAME	VOLTS	PH	CONNECTED HP	CONNECTED KVA	AMPS	REMARKS
XFMR 5TL (DB5B)	480	3		82		
PANEL 5HM	480	3		8.4		
PANEL 5HN	480	3		48	238.9	287
PANEL 5HP	480	3		187		
ELEVATOR	480	3	30	33		
SF 5-1	480	3	3	4		
SF 5-2	480	3	3	4		
SF 5-3	480	3	3	4		
SF 5-4	480	3	5	6.3		
SF 5-5	480	3	1 1/2	2.5		
SF 5-6	480	3	1	1.7		
SF 5-7	480	3	1 1/2	2.5		
SF 5-8	480	3	3/4	1.3		
SF 5-9	480	3	2	2.8		
SF 5-10	480	3	1	1.7		
SF 5-14	480	3	1-1/2	2.5		
SF 5-15	480	3	1/2	0.9		
SF 5-16	480	3	1/2	0.9		
EF 5-7	480	3	2	2.8		
EF 5-8	480	3	2	2.8		
EF 5-9	480	3	2	2.8		
EF 5-10	480	3	2	2.8		
EF 5-16	480	3	2	2.8		
EF 5-17	480	3	2	2.8		
EF 5-18	480	3	2	2.8		
EF 5-19	480	3	1 1/2	2.5		
EF 5-20	480	3	1	1.7		
EF 5-21	480	3	1	1.7		
EF 5-22	480	3	1	1.7		
EF 5-24	480	3	3/4	1.3		
EF 5-29	480	3	1/2	0.9		
EF 5-36	480	3	3/4	1.3		
TOTAL	480	3		473.6	570	

PANEL 5HP

LOAD NAME	VOLTS	PH	CONNECTED HP	CONNECTED KVA	AMPS	REMARKS
RTU 5-1	480	3		40.7		
RTU 5-2	480	3		34		
RTU 5-3	480	3		34		
MAU 5-1	480	3	20	23.3		
MAU 5-2	480	3	15	18.4		
MAU 5-3	480	3	15	18.4		
MAU 5-4	480	3	15	18.4		
MAU 5-5	480	3	15	18.4		
MAU 5-6	480	3	15	18.4		
MAU 5-7	480	3	7 1/2	10		
MAU 5-8	480	3	3	4.9		
TOTAL	480	3		238.9	287	

MAIN SWITCHBOARD MSB LOAD SUMMARY / GENERATOR LOAD SUMMARY

LOAD NAME	VOLTS	PH	NORMAL CONNECTED HP	NORMAL CONNECTED KVA	NORMAL CONNECTED AMPS	NORMAL DEMAND	GENERATOR DEMAND
DB4	480	3		242			
DB5	480	3		2142			
DB6	480	3		497			
MCC6	480	3		72.5			
DB7	480	3		435			
LNG SYSTEM	480	3		582			
PANEL 1H	480	3		16			
DB7A	480	3		471			
TOTAL	480	3		4457	5364	(0.7) x 5364 = 3755 AMPS	2216KVA - 435KVA (DB7) - 471KVA (DB7A) = 1310KVA

NOTE:
1. 1500KW GENERATOR = 1666KVA
2. THE GENERATOR ESTIMATED DEMAND LOAD IS 50% OF THE NORMAL CONNECTED LOAD (4433KVA x 0.5 = 2216KVA).
3. BUS WASH/BRAKE DYNO BUILDING WILL DE-ENERGIZED WHEN THE GENERATOR STARTS.

DISTRIBUTION PANEL DB4

LOAD NAME	VOLTS	PH	CONNECTED HP	CONNECTED KVA	AMPS	REMARKS
PANEL 4HA	480	3		52		
PANEL 4HB	480	3		9.4		
RTU 4-1	480	3		34		
RTU 4-2	480	3		15		
RTU 4-3	480	3		24		
RTU 4-4	480	3		21		
XFMR 4TA (PANEL 4LA)	480	3		87		
TOTAL	480	3		242	291	

DISTRIBUTION PANEL DB5

LOAD NAME	VOLTS	PH	CONNECTED HP	CONNECTED KVA	AMPS	REMARKS
MCC5	480	3		421.7		
MCC5A	480	3		163.2		
DB5A	480	3		1106		
PANEL 5H	480	3		23		
PANEL 5HA	480	3		99.4		
PANEL 5HB	480	3		88		
PANEL 5HC	480	3		88		
PANEL 5HD	480	3		83		
XFMR 5TB (PANEL 5LC)	480	3		70		
TOTAL	480	3		2142	2576	

REGISTERED PROFESSIONAL ENGINEER
PAUL K. ERICSON
No. 11219
exp.06/30/2025
ELECTRICAL
STATE OF CALIFORNIA

05-13-2024

Stantec
801 S. Figueroa Street, Suite 300
Los Angeles, CA 90017

Copyright Reserved
The Contractor shall verify and be responsible for all dimensions. DO NOT scale the drawing - any errors or omissions shall be reported to Stantec without delay.
The Copyrights to all designs and drawings are the property of Stantec. Reproduction or use for any purpose other than that authorized by Stantec is forbidden.

REVISION	DESCRIPTION	DATE
4	100% RESUBMITTAL	05/13/2024
3	100% CONSTRUCTION DRAWING SUBMITTAL	03/27/2024
2	90% UPDATED CONSTRUCTION SUBMITTAL	02/13/2024
1	90% CONSTRUCTION DRAWING SUBMITTAL	12/07/2023

REPLACEMENT OF MECHANICAL UNITS AT SANTA ANA BUS BASE

4301 W. MAC ARTHUR BLVD., SANTA ANA, CA

ELECTRICAL SINGLE LINE DIAGRAM

JOB #:	
DESIGN BY:	IZ
DRAWN BY:	AD
CHECKED BY:	PKE
DATE:	02/13/2024
SCALE:	NTS
SHEET:	E-601F

OCTA

ORANGE COUNTY
TRANSPORTATION AUTHORITY
550 SOUTH MAIN STREET, ORANGE, CA

Autodesk Docs://2014233703_Santa_Ana_Bus/elec_SantaAnaBus_2014233703.rvt

5/8/2024 9:59:46 AM

IFB 4-2550 EXHIBIT B

Stantec
Panel

Name: **4LC** | Volts: 208Y/120V | Mains Type: MLO | Type:
Location: | Phases: 3 | Mains Rating: 225 A | AIC Rating: 10K
Supply From: 4LA | Wires: 4 | Max Rating: 225 A | Mounting: Surface
Serves: | Lugs: Single Lugs | Enclosure: Type 1

Notes:

CKT	Circuit Description	Trip	Poles	CB	A	A	B	B	C	C	CB	Poles	Trip	Circuit Description	CKT	Key Note
1	Spare	20 A	1	--	180	**348**					--	**1**	20 A	**EF 4-1**	2	1
3	MTCC-4	20 A	1	--			100	**420**			--	**1**	20 A	**EF 4-2**	4	1
5	PAC-1	20 A	1	--					180	**420**	--	**1**	20 A	**EF 4-3**	6	1
7	LAV/UR CONTROLS	20 A	1	--	1200	**180**					--	**1**	20 A	**EF 4-4**	8	1
9	ANNUNCIATOR-4	20 A	1	--			180	50			--	1	20 A	EF TIME CLOCK	10	
11	MASTER DOOR CTRL PNL	20 A	1	--					500	360	--	1	20 A	ROOF RECEPTACLES	12	
13	MASTER INTERCOM CTRL PNL	20 A	1	--	500	100					--	1	20 A	IRRIGATION CONTROLLER - A	14	
15	SPACE	20 A	1	--			450	100			--	1	20 A	IRRIGATION CONTROLLER - B	16	
17	RECEPTACLES PBX	20 A	1	--					360	1840	--	1	40 A	BUS ENTRANCE GATE	18	
19	RECEPTACLES PBX	20 A	1	--	360	1840					--	1	40 A	BUS ENTRANCE GATE	20	
21	RECEPTACLES OC-12	20 A	1	--			360	1840			--	1	40 A	EMPLOYEE ENTRANCE GATE	22	
23	RECEPTACLES OC-12	20 A	1	--					360	600	--	1	20 A	BUS STOP SHELTER	24	
25	RECEPTACLES OC-12	30 A	1	--	500	3120					--	2	40 A	LOT MONITORING SHACK	26	
27	RECEPTACLE	20 A	1	--			180	3120			--	--	--	--	28	
29	HOOD	20 A	1	--					600	**1737**	--	2	**25 A**	**AC 4-1**	30	1
31	Spare	20 A	1	--	0	**1737**					--	**--**	--	**--**	32	
33	ELECTRIC RANGE	60 A	2	--			4350	**1737**			--	2	**25 A**	**AC 4-2**	34	1
35	--	--	--	--					4350	**1737**	--	**--**	--	**--**	36	
37	IRRIGATION CONTROLLER - C	20 A	1	--	0	**696**					--	1	20 A	**SF 4-1**	38	1
39	Space	--	1	--			--	100			--	1	20 A	DAMPERS	40	
41	Space	--	1	--					--	--	--	1	--	Space	42	
				Total Load:	**10.76 kVA**		**12.99 kVA**		**13.04 kVA**							
				Total Amps:	**90 A**		**111 A**		**112 A**							

Load Classification	Connected Load	Demand Factor	Estimated Demand	Panel Totals	
Spare	36792 VA	100.00%	36792 VA		
				Total Conn. Load:	**36792 VA**
				Total Est. Demand:	**36792 VA**
				Total Conn.:	**102 A**
				Total Est. Demand:	**102 A**
				Existing Total Conn. Load:	**34710 VA**
				Existing Total Conn:	**96 A**

CB Legend (blank = circuit breaker):
G = GFCI S = Shunt Trip D = Switching Duty A = AFCI H = HID Rated C = HACR Rated † = Existing Circuit ‡ = Revised Circuit
Notes:

Stantec
Panel

Name: **5HA** | Volts: 480Y/277V | Mains Type: MLO | Type:
Location: ELECTRICAL RM 184 | Phases: 3 | Mains Rating: 225 A | AIC Rating: 22K
Supply From: DB5 | Wires: 4 | Max Rating: 225 A | Mounting: Surface
Serves: | Lugs: Single Lugs | Enclosure: Type 1

Notes:

CKT	Circuit Description	Trip	Poles	CB	A	A	B	B	C	C	CB	Poles	Trip	Circuit Description	CKT	Key Note
1	SITE LIGHTING	20 A	1	--	2880	1600					--	1	20 A	WALL LIGHTING	2	
3	SITE LIGHTING	20 A	1	--			2880	1200			--	1	20 A	WALL LIGHTING	4	
5	SITE LIGHTING	20 A	1	--					2880	1200	--	1	20 A	WALL LIGHTING	6	
7	STEAM CLEAN LTG	20 A	1	--	2228	7167					--	3	60 A	SC-1 PARALLELOGRAM LIFT	8	
9	STEAM CLEAN LTG	20 A	1	--			2228	7167			--	--	--	--	10	
11	BAY LTG	20 A	1	--					1988	7167	--	--	--	--	12	
13	BAY LTG	20 A	1	--	1966	336					--	1	20 A	CANOPY LTG	14	
15	BAY LTG	20 A	1	--			2156	420			--	1	20 A	CANOPY LTG	16	
17	BAY LTG	20 A	1	--					2156	588	--	1	20 A	CANOPY LTG	18	
19	BAY LTG	20 A	1	--	1398	504					--	1	20 A	CANOPY LTG	20	
21	BAY LTG	20 A	1	--			1398	5600			--	3	30 A	SC-3 HOT PRESS. WASHER	22	
23	STEAM CLEAN LTG	20 A	1	--					1632	5600	--	--	--	--	24	
25	STEAM CLEAN LTG	20 A	1	--	1632	5600					--	--	--	--	26	
27	Space	--	1	--			--	**1496**			--	**3**	20 A	**SF 5-12, 5-13 & EF 5-34**	28	1
29	Space	--	1	--					--	**1496**	--	**--**	**--**	**--**	30	
31	Space	--	1	--	--	**1496**					--	**--**	**--**	**--**	32	
33	Space	--	1	--			--	--			--	1	--	Space	34	
35	Space	--	1	--					--	--	--	1	--	Space	36	
37	Space	--	1	--	--	8335					--	3	70 A	PANEL 5LA (VIA XFMR 5TA)	38	
39	Space	--	1	--			--	8530			--	--	--	--	40	
41	Space	--	1	--					--	6485	--	--	--	--	42	
				Total Load:	**35.14 kVA**		**33.08 kVA**		**31.19 kVA**							
				Total Amps:	**128 A**		**120 A**		**113 A**							

Load Classification	Connected Load	Demand Factor	Estimated Demand	Panel Totals	
Spare	99409 VA	100.00%	99409 VA		
				Total Conn. Load:	**99409 VA**
				Total Est. Demand:	**99409 VA**
				Total Conn.:	**120 A**
				Total Est. Demand:	**120 A**
				Existing Total Conn. Load:	**98911 VA**
				Existing Total Conn:	**119 A**

CB Legend (blank = circuit breaker):
G = GFCI S = Shunt Trip D = Switching Duty A = AFCI H = HID Rated C = HACR Rated † = Existing Circuit ‡ = Revised Circuit
Notes:

Stantec
Panel

Name: **5HE** | Volts: 480Y/277V | Mains Type: MLO | Type:
Location: ELECTRICAL RM 137 | Phases: 3 | Mains Rating: 225 A | AIC Rating: 30K
Supply From: DB5A | Wires: 4 | Max Rating: 225 A | Mounting: Surface
Serves: | Lugs: Single Lugs | Enclosure: Type 1

Notes:

CKT	Circuit Description	Trip	Poles	CB	A	A	B	B	C	C	CB	Poles	Trip	Circuit Description	CKT	Key Note
1	SITE LTG	20 A	1	--	960	1200					--	1	20 A	WALL LTG	2	
3	SITE LTG	20 A	1	--			960	1600			--	1	20 A	WALL LTG	4	
5	SITE LTG	20 A	1	--					960	1284	--	1	20 A	WALL LTG	6	
7	PARTS ROOM LTG	20 A	1	--	2062	480					--	3	20 A	PS-1 STAK SYSTEM	8	
9	PARTS ROOM LTG	20 A	1	--			2002	480			--	--	--	--	10	
11	PARTS ROOM LTG	20 A	1	--					2760	480	--	--	--	--	12	
13	PARTS ROOM LTG	20 A	1	--	2760	4633					--	3	30 A	PS-10 FORKLIFT	14	
15	PARTS ROOM LTG	20 A	1	--			2645	4633			--	--	--	--	16	
17	PARTS ROOM LTG	20 A	1	--					2760	4633	--	--	--	--	18	
19	PARTS ROOM LTG	20 A	1	--	2243	**1884**					--	3	20 A	**EF 5-31, 5-33, & SF 5-11**	20	1
21	PARTS ROOM LTG	20 A	1	--			2090	**1884**			--	--	--	--	22	
23	PARTS ROOM LTG	20 A	1	--					2645	**1884**	--	--	--	--	24	
25	PARTS ROOM LTG	20 A	1	--	2530	0					--	1	20 A	Spare	26	
27	PARTS ROOM LTG	20 A	1	--			2415	0			--	1	20 A	Spare	28	
29	PARTS ROOM LTG	20 A	1	--					2530	0	--	1	20 A	Spare	30	
31	TEL, ELECT, LUBE, C.A. LTG	20 A	1	--	539	0					--	1	20 A	Spare	32	
33	TEL, ELECT, LUBE, C.A. LTG	20 A	1	--			385	0			--	1	20 A	Spare	34	
35	Spare	20 A	1	--					0	0	--	1	20 A	Spare	36	
37	Spare	20 A	1	--	0	6330					--	3	50 A	PANEL 5LH (VIA XFMR 5TE)	38	
39	Spare	20 A	1	--			0	3680			--	--	--	--	40	
41	Spare	20 A	1	--					0	4155	--	--	--	--	42	
				Total Load:	**25.62 kVA**		**22.77 kVA**		**24.09 kVA**							
				Total Amps:	**93 A**		**82 A**		**88 A**							

Load Classification	Connected Load	Demand Factor	Estimated Demand	Panel Totals	
Spare	72486 VA	100.00%	72486 VA		
				Total Conn. Load:	**72486 VA**
				Total Est. Demand:	**72486 VA**
				Total Conn.:	**87 A**
				Total Est. Demand:	**87 A**
				Existing Total Conn. Load:	**73134 VA**
				Existing Total Conn:	**88 A**

CB Legend (blank = circuit breaker):
G = GFCI S = Shunt Trip D = Switching Duty A = AFCI H = HID Rated C = HACR Rated † = Existing Circuit ‡ = Revised Circuit
Notes:

Stantec
Panel

Name: **5HJ** | Volts: 480Y/277V | Mains Type: MLO | Type:
Location: BODY 174 | Phases: 3 | Mains Rating: 400 A | AIC Rating: 22K
Supply From: DB5A | Wires: 4 | Max Rating: 400 A | Mounting: Surface
Serves: | Lugs: Single Lugs | Enclosure: Type 1

Notes:

CKT	Circuit Description	Trip	Poles	CB	A	A	B	B	C	C	CB	Poles	Trip	Circuit Description	CKT
1	BP-1 IN-GROUND LIFT	30 A	3	--	3733	5600					--	3	50 A	V-1 COLLECTION VACUUM	2
3	--	--	--	--			3733	5600			--	--	--	--	4
5	--	--	--	--					3733	5600	--	--	--	--	6
7	BP-2 IN-GROUND LIFT	30 A	3	--	3733	504					--	1	20 A	CANOPY LTG	8
9	--	--	--	--			3733	420			--	1	20 A	CANOPY LTG	10
11	--	--	--	--					3733	0	--	1	20 A	SMOKER CANOPY LTG	12
13	BP-1 IN-GROUND LIFT	30 A	3	--	3733	0					--	1	20 A	Spare	14
15	--	--	--	--			3733	2134			--	1	20 A	BODY LTG	16
17	--	--	--	--					3733	2146	--	1	20 A	BODY LTG	18
19	BP-7 PAINT BOOTH	100 A	3	--	17800	0					--	1	20 A	LCP5D CONTROL	20
21	--	--	--	--			17800	1476			--	1	20 A	BODY LTG	22
23	--	--	--	--					17800	1834	--	1	20 A	BODY LTG	24
25	SM-1 SHEAR	20 A	3	--	2933	948					--	1	20 A	PAINT BOTH LTG	26
27	--	--	--	--			2933	711			--	1	20 A	VAC, STOR, PAINT MIX LTG	28
29	--	--	--	--					2933	1600	--	1	20 A	WALL LTG	30
31	SM-6 VERTICAL BAND SAW	20 A	3	--	1267	1600					--	1	20 A	WALL LTG	32
33	--	--	--	--			1267	1200			--	1	20 A	WALL LTG	34
35	--	--	--	--					1267	0	--	1	20 A	Spare	36
37	SM-20 OVERHEAD CRANE	20 A	3	--	1493	7540					--	3	70 A	PANEL 5LL (VIA XFMR 5TH)	38
39	--	--	--	--			1493	6280			--	--	--	--	40
41	--	--	--	--					1493	5990	--	--	--	--	42
				Total Load:	**50.88 kVA**		**52.51 kVA**		**51.86 kVA**						
				Total Amps:	**184 A**		**190 A**		**188 A**						

Load Classification	Connected Load	Demand Factor	Estimated Demand	Panel Totals	
Spare	155259 VA	100.00%	155259 VA		
				Total Conn. Load:	**155259 VA**
				Total Est. Demand:	**155259 VA**
				Total Conn.:	**187 A**
				Total Est. Demand:	**187 A**

CB Legend (blank = circuit breaker):
G = GFCI S = Shunt Trip D = Switching Duty A = AFCI H = HID Rated C = HACR Rated † = Existing Circuit ‡ = Revised Circuit
Notes:

KEY NOTES:

1 EXISTING EQUIPMENT TO BE REPLACED.

Stantec
801 S. Figueroa Street, Suite 300
Los Angeles, CA 90017

Copyright Reserved
The Contractor shall verify and be responsible for all dimensions. DO NOT scale the drawing - any errors or omissions shall be reported to Stantec without delay.
The Copyrights to all designs and drawings are the property of Stantec. Reproduction or use for any purpose other than that authorized by Stantec is forbidden.

REVISION	DESCRIPTION	DATE
4	100% RESUBMITTAL	05/13/2024
3	100% CONSTRUCTION DRAWING SUBMITTAL	03/27/2024
2	90% UPDATED CONSTRUCTION SUBMITTAL	02/13/2024
1	90% CONSTRUCTION DRAWING SUBMITTAL	12/07/2023

REPLACEMENT OF MECHANICAL UNITS AT SANTA ANA BUS BASE

4301 W. MAC ARTHUR BLVD., SANTA ANA, CA

PANEL SCHEDULES

JOB #:
DESIGN BY: IZ
DRAWN BY: AD
CHECKED BY: PKE
DATE: 02/13/2024
SCALE: NTS
SHEET: **E-700F**

4LC	5HA
5HE	5HJ

REGISTERED PROFESSIONAL ENGINEER
PAUL K. ERICSON
No. 11219
exp.06/30/2025
ELECTRICAL
STATE OF CALIFORNIA

05-13-2024

OCTA
ORANGE COUNTY
TRANSPORTATION AUTHORITY
550 SOUTH MAIN STREET, ORANGE, CA

Autodesk Docs://2014233703_Santa_Ana_Bus/elec_SantaAnaBus_2014233703.rvt
5/8/2024 9:59:47 AM

Panel 5LD

Stantec — Panel

Name: **5LD** | Volts: 208Y/120V | Mains Type: MLO | Type:
Location: RUNNING REPAIR AREA 178 | Phases: 3 | Mains Rating: 225 A | AIC Rating: 10K
Supply From: 5LC | Wires: 4 | Max Rating: 225 A | Mounting: Surface
Serves: | Lugs: Single Lugs | Enclosure: Type 1

Notes:

CKT	Circuit Description	Trip	Poles	CB	A		B		C		CB	Poles	Trip	Circuit Description	CKT
1	Spare	20 A	1	--	0	50					--	1	20 A	SOLENOID	2
3	Spare	20 A	1	--			0	50			--	1	20 A	SOLENOID	4
5	RECEPTACLES DROP	20 A	1	--					360	**276**	**--**	1	20 A	**EF 5-39**	6
7	B-4 BATTERY CHARGER	20 A	1	--	500	0					--	1	20 A	Spare	8
9	RECEPTACLES DROP	20 A	1	--			360	360			--	1	20 A	RECEPTACLES DROP	10
11	RECEPTACLES DROP	20 A	1	--					360	360	--	1	20 A	RECEPTACLES DROP	12
13	RECEPTACLES DROP	20 A	1	--	360	360					--	1	20 A	RECEPTACLES DROP	14
15	RECEPTACLES DROP	20 A	1	--			360	360			--	1	20 A	RECEPTACLES DROP	16
17	PR-27 FLUID MANAGEMENT	20 A	1	--					500	1375	--	2	20 A	PR-14 FILTER CRUSHER	18
19	PR-25 PARTS WASHER	20 A	1	--	670	1375					--	--	--	--	20
21	PR-27 FLUID MANAGEMENT	20 A	1	--			500	530			--	1	20 A	DRINKING FOUNTAIN DF 5-2	22
23	PR-25 PARTS WASHER	20 A	1	--					670	180	--	1	20 A	ROOF RECEPTACLES	24
25	RECEPTACLE B-4	20 A	1	--	180	1590					--	1	20 A	OVERHEAD SECT. DOOR	26
27	PR-27 FLUID MANAGEMENT	20 A	1	--			500	1590			--	1	20 A	OVERHEAD SECT. DOOR	28
29	RECEPTACLES	20 A	1	--					360	1590	--	1	20 A	OVERHEAD SECT. DOOR	30
31	RECEPTACLES	20 A	1	--	360	1590					--	1	20 A	OVERHEAD SECT. DOOR	32
33	WASTE OIL ALARM	20 A	1	--			0	1590			--	1	20 A	OVERHEAD SECT. DOOR	34
35	Spare	20 A	1	--					0	1590	--	1	20 A	OVERHEAD SECT. DOOR	36
37	Spare	20 A	1	--	0	1590					--	1	20 A	OVERHEAD SECT. DOOR	38
39	Spare	20 A	1	--			0	0			--	1	20 A	Spare	40
41	Spare	20 A	1	--					0	0	--	1	20 A	Spare	42
				Total Load:	**8.63 kVA**		**6.20 kVA**		**7.62 kVA**						
				Total Amps:	**74 A**		**52 A**		**65 A**						

Load Classification	Connected Load	Demand Factor	Estimated Demand	Panel Totals	
Spare	22446 VA	100.00%	22446 VA		
				Total Conn. Load:	**22446 VA**
				Total Est. Demand:	**22446 VA**
				Total Conn.:	**62 A**
				Total Est. Demand:	**62 A**
				Existing Total Conn. Load:	**22670 VA**
				Existing Total Conn:	**63 A**

CB Legend (blank = circuit breaker):
G = GFCI S = Shunt Trip D = Switching Duty A = AFCI H = HID Rated C = HACR Rated † = Existing Circuit ‡ = Revised Circuit

Notes:

Panel 5LG

Stantec — Panel

Name: **5LG** | Volts: 208Y/120V | Mains Type: MLO | Type:
Location: REBUILD 106 | Phases: 3 | Mains Rating: 225 A | AIC Rating: 10K
Supply From: 5LF | Wires: 4 | Max Rating: 225 A | Mounting: Surface
Serves: | Lugs: Single Lugs | Enclosure: Type 1

Notes:

CKT	Circuit Description	Trip	Poles	CB	A		B		C		CB	Poles	Trip	Circuit Description	CKT
1	RECEPTACLES	20 A	1	--	180	670					--	1	20 A	RB-25 JIB CRANE	2
3	RECEPTACLES	20 A	1	--			180	670			--	1	20 A	RB-25 JIB CRANE	4
5	RECEPTACLES	20 A	1	--					180	670	--	1	20 A	RB-25 JIB CRANE	6
7	RECEPTACLES	20 A	1	--	540	670					--	1	20 A	RB-25 JIB CRANE	8
9	RECEPTACLES	20 A	1	--			540	1000			--	1	20 A	EL-2 BUFFER/GRINDER	10
11	RECEPTACLES	20 A	1	--					360	180	--	1	20 A	EL-12 WORKBENCH	12
13	RB-1 WORKBENCH	20 A	1	--	360	360					--	1	20 A	RECEPTACLES	14
15	RB-1 WORKBENCH	20 A	1	--			180	360			--	1	20 A	RECEPTACLES	16
17	RB-1 WORKBENCH	20 A	1	--					180	180	--	1	20 A	RECEPTACLES	18
19	RB-1 WORKBENCH	20 A	1	--	180	180					--	1	20 A	EL-1 WORKBENCH W/VISE	20
21	RB-1 WORKBENCH	20 A	1	--			180	**2143**			**--**	**2**	**30 A**	**HP 5-1**	22
23	REC. OFFICE	20 A	1	--					180	**2143**	**--**	**--**	**--**	**--**	24
25	REC. OFFICE	20 A	1	--	180	510					--	1	20 A	UH 5-5	26
27	RB-8 BUFFER/GRINDER	20 A	1	--			1000	510			--	1	20 A	UH 5-9	28
29	RB-21 DRILL PRESS	20 A	1	--					1590	0	--	1	20 A	Spare	30
31	RB-3 TRANSM. DRAIN TABLE	20 A	1	--	540	0					--	1	20 A	Spare	32
33	RB-3 TRANSM. DRAIN TABLE	20 A	1	--			540	0			--	1	20 A	Spare	34
35	RB-3 TRANSM. DRAIN TABLE	20 A	1	--					360	0	--	1	20 A	Spare	36
37	RB-7 PARTS WASHER	20 A	1	--	180	0					--	1	20 A	Spare	38
39	Spare	20 A	1	--			0	0			--	1	20 A	Spare	40
41	Spare	20 A	1	--					0	0	--	1	20 A	Spare	42
				Total Load:	**4.55 kVA**		**7.30 kVA**		**6.02 kVA**						
				Total Amps:	**38 A**		**63 A**		**52 A**						

Load Classification	Connected Load	Demand Factor	Estimated Demand	Panel Totals	
Spare	17876 VA	100.00%	17876 VA		
				Total Conn. Load:	**17876 VA**
				Total Est. Demand:	**17876 VA**
				Total Conn.:	**50 A**
				Total Est. Demand:	**50 A**
				Existing Total Conn. Load:	**16630 VA**
				Existing Total Conn:	**46 A**

CB Legend (blank = circuit breaker):
G = GFCI S = Shunt Trip D = Switching Duty A = AFCI H = HID Rated C = HACR Rated † = Existing Circuit ‡ = Revised Circuit

Notes:

KEY NOTES:

1 EXISTING EQUIPMENT TO BE REPLACED.

Panel 5LH

Stantec — Panel

Name: **5LH** | Volts: 208Y/120V | Mains Type: MCB | Type:
Location: ELECTRICAL RM 137 | Phases: 3 | Mains Rating: 225 A | AIC Rating: 10K
Supply From: 5HE | Wires: 4 | MCB Rating: 100 A | Mounting: Surface
Serves: | Lugs: Single Lugs | Enclosure: Type 1

Notes:

CKT	Circuit Description	Trip	Poles	CB	A		B		C		CB	Poles	Trip	Circuit Description	CKT
1	RECEPTACLES	20 A	1	--	540	1040					--	2	20 A	AIR DRYER	2
3	RECEPTACLES	20 A	1	--			540	1040			--	--	--	--	4
5	RECEPTACLES	20 A	1	--					540	1040	--	2	20 A	AIR DRYER	6
7	RECEPTACLES	20 A	1	--	360	1040					--	--	--	--	8
9	RECEPTACLES	20 A	1	--			180	300			--	1	20 A	PANEL LCP5A	10
11	RECEPTACLES	20 A	1	--					180	385	--	1	20 A	UH 5-1	12
13	RECEPTACLES	20 A	1	--	720	1590					--	1	20 A	OVERHEAD SECT. DOOR	14
15	RECEPTACLES	20 A	1	--			720	100			--	1	20 A	AUT. DRAIN VALVES	16
17	RECEPTACLES	20 A	1	--					540	800	--	1	20 A	FIRE BELL	18
19	F.A.C.P	20 A	1	--	0	800					--	1	20 A	F/A PNL	20
21	Spare	20 A	1	--			0	800			--	1	20 A	MTC	22
23	L.N.G. PANEL	20 A	1	--					0	670	--	1	20 A	EF 5-30 (1/4)	24
25	L.N.G. U.P.S	20 A	1	--	0	**180**					**--**	1	20 A	**EF 5-32 (1/10)**	26
27	Space	--	1	--			--	0			--	1	20 A	Spare	28
29	Space	--	1	--					--	0	--	1	20 A	Spare	30
31	Space	--	1	--	--	--					--	1	--	Space	32
33	Space	--	1	--			--	--			--	1	--	Space	34
35	Space	--	1	--					--	--	--	1	--	Space	36
37	Space	--	1	--	--	--					--	1	--	Space	38
39	Space	--	1	--			--	--			--	1	--	Space	40
41	Space	--	1	--					--	--	--	1	--	Space	42
				Total Load:	**6.27 kVA**		**3.68 kVA**		**4.16 kVA**						
				Total Amps:	**53 A**		**31 A**		**35 A**						

Load Classification	Connected Load	Demand Factor	Estimated Demand	Panel Totals	
Spare	14105 VA	100.00%	14105 VA		
				Total Conn. Load:	**14105 VA**
				Total Est. Demand:	**14105 VA**
				Total Conn.:	**39 A**
				Total Est. Demand:	**39 A**
				Existing Total Conn. Load:	**14165 VA**
				Existing Total Conn:	**39 A**

CB Legend (blank = circuit breaker):
G = GFCI S = Shunt Trip D = Switching Duty A = AFCI H = HID Rated C = HACR Rated † = Existing Circuit ‡ = Revised Circuit

Notes:

Panel 5LJ

Stantec — Panel

Name: **5LJ** | Volts: 208Y/120V | Mains Type: MCB | Type:
Location: BUILDING MAINTENANCE 150 | Phases: 3 | Mains Rating: 225 A | AIC Rating: 10K
Supply From: 5HG | Wires: 4 | MCB Rating: 150 A | Mounting: Surface
Serves: | Lugs: Single Lugs | Enclosure: Type 1

Notes:

CKT	Circuit Description	Trip	Poles	CB	A		B		C		CB	Poles	Trip	Circuit Description	CKT
1	BM-1 WORKBENCH W/VISE	20 A	1	--	180	180					--	1	20 A	M-1 WORKBENCH W/VISE	2
3	BM-1 WORKBENCH W/VISE	20 A	1	--			180	180			--	1	20 A	M-1 WORKBENCH W/VISE	4
5	BM-1 WORKBENCH W/VISE	20 A	1	--					180	1000	--	1	20 A	M-6 BUFFER/GRINDER	6
7	BM-1 WORKBENCH W/VISE	20 A	1	--	180	1150					--	2	20 A	M-7 HORIZONTAL BAND SAW	8
9	BM-2 DRILL PRESS	20 A	1	--			1600	1150			--	--	--	--	10
11	BM-3 VERTICAL BAND SAW	20 A	1	--					180	1130	--	1	20 A	M-8 VERTICAL BAND SAW	12
13	BM-6 DUST COLLECTOR	40 A	1	--	1840	180					--	1	20 A	PLASMA CUTTER M-13	14
15	BM-5 BUFFER GRINDER	20 A	1	--			1000	1000			--	1	40 A	M-9 BELT DISC SANDER	16
17	BM-6 BELT/DISC SANDER	40 A	1	--					4140	720	--	1	20 A	RECEPTACLES	18
19	BM-18 COMP. MITRE SAW	40 A	1	--	1840	1080					--	1	20 A	RECEPTACLES	20
21	BM-19 PIPE THREADING	20 A	1	--			1130	1080			--	1	20 A	RECEPTACLES	22
23	REC. OFFICE #149	20 A	1	--					180	900	--	1	20 A	RECEPTACLES	24
25	RECEPTACLES	20 A	1	--	360	1590					--	1	20 A	OVERHEAD SECT. DOOR	26
27	RECEPTACLES	20 A	1	--			360	1590			--	1	20 A	OVERHEAD SECT. DOOR	28
29	RECEPTACLES	20 A	1	--					360	510	--	1	20 A	UH 5-10	30
31	RECEPTACLES	20 A	1	--	360	1840					--	1	40 A	M-25 FUME EXTRACTOR	32
33	RECEPTACLES	20 A	1	--			360	**1737**			**--**	2	**25 A**	**AC 5-1**	34
35	RECEPTACLES	20 A	1	--					180	**1737**	**--**	**--**	**--**	**--**	36
37	RECEPTACLES	20 A	1	--	540	900					--	3	20 A	M-5 DRILL PRESS	38
39	RECEPTACLES	20 A	1	--			360	900			--	--	--	--	40
41	RECEPTACLES	20 A	1	--					360	900	--	--	--	--	42
				Total Load:	**12.22 kVA**		**12.63 kVA**		**12.48 kVA**						
				Total Amps:	**102 A**		**106 A**		**104 A**						

Load Classification	Connected Load	Demand Factor	Estimated Demand	Panel Totals	
Spare	37324 VA	100.00%	37324 VA		
				Total Conn. Load:	**37324 VA**
				Total Est. Demand:	**37324 VA**
				Total Conn.:	**104 A**
				Total Est. Demand:	**104 A**
				Existing Total Conn. Load:	**36970 VA**
				Existing Total Conn:	**103 A**

CB Legend (blank = circuit breaker):
G = GFCI S = Shunt Trip D = Switching Duty A = AFCI H = HID Rated C = HACR Rated † = Existing Circuit ‡ = Revised Circuit

Notes:

5LD	5LG
5LH	5LG

REGISTERED PROFESSIONAL ENGINEER PAUL K. ERICSON No. 11219 exp.06/30/2025 ELECTRICAL STATE OF CALIFORNIA

05-13-2024

Stantec
801 S. Figueroa Street, Suite 300
Los Angeles, CA 90017

Copyright Reserved
The Contractor shall verify and be responsible for all dimensions. DO NOT scale the drawing - any errors or omissions shall be reported to Stantec without delay.
The Copyrights to all designs and drawings are the property of Stantec. Reproduction or use for any purpose other than that authorized by Stantec is forbidden.

REVISION	DESCRIPTION	DATE
4	100% RESUBMITTAL	05/13/2024
3	100% CONSTRUCTION DRAWING SUBMITTAL	03/27/2024
2	90% UPDATED CONSTRUCTION SUBMITTAL	02/13/2024
1	90% CONSTRUCTION DRAWING SUBMITTAL	12/07/2023

REPLACEMENT OF MECHANICAL UNITS AT SANTA ANA BUS BASE
4301 W. MAC ARTHUR BLVD., SANTA ANA, CA

PANEL SCHEDULES

JOB #:
DESIGN BY: IZ
DRAWN BY: AD
CHECKED BY: PKE
DATE: 02/13/2024
SCALE: NTS
SHEET: **E-701F**

OCTA
ORANGE COUNTY TRANSPORTATION AUTHORITY
550 SOUTH MAIN STREET, ORANGE, CA

Stantec — Panel

Name:	**5LK**	Volts:	208Y/120V	Mains Type:	MCB	Type:	
Location:	STORAGE 155	Phases:	3	Mains Rating:	225 A	AIC Rating:	10K
Supply From:	5HH (VIA XFMR 5TG)	Wires:	4	MCB Rating:	150 A	Mounting:	Surface
Serves:				Lugs:	Single Lugs	Enclosure:	Type 1

Notes:

Key Note	CKT	Circuit Description	Trip	Poles	CB	A	A	B	B	C	C	CB	Poles	Trip	Circuit Description	CKT	Key Note
	1	CAMERAS 6, 7, 8 & 9	20 A	1	--	600	180					--	1	20 A	REC. MANAGER OFFICE	2	
1	3	**EF 5-40**	20 A	**1**	**--**			**420**	180			--	1	20 A	REC. OFFICE	4	
	5	RECEPTACLES	20 A	1	--					0	360	--	1	20 A	RECEPTACLES COUNTER	6	
	7	RECEPTACLES	20 A	1	--	540	1000					--	1	20 A	REFRIGERATOR	8	
	9	RECEPTACLES	20 A	1	--			540	1200			--	1	20 A	MICROWAVE	10	
	11	RECEPTACLES	20 A	1	--					540	1200	--	1	20 A	MICROWAVE	12	
	13	RECEPTACLES	20 A	1	--	720	1590					--	1	20 A	GARBAGE DISPOSAL	14	
	15	RECEPTACLES	20 A	1	--			720	1300			--	1	20 A	HOT WATER DISPENSER	16	
	17	RECEPTACLES	20 A	1	--					720	900	--	1	20 A	RECEPTACLES RESTROOMS	18	
	19	RECEPTACLES	20 A	1	--	720	540					--	1	20 A	RECEPTACLES	20	
	21	RECEPTACLES	20 A	1	--			720	360			--	1	20 A	RECEPTACLES	22	
	23	RECEPTACLES	20 A	1	--					720	360	--	1	20 A	RECEPTACLES	24	
	25	SHREDDER	25 A	3	--	1267	540					--	1	20 A	RECEPTACLES	26	
	27	--	--	--	--			1267	540			--	1	20 A	RECEPTACLES	28	
	29	--	--	--	--					1267	540	--	1	20 A	RECEPTACLES	30	
	31	MASTER DOOR CTRL PNL	20 A	1	--	500	1130					--	1	20 A	COILING DOOR	32	
	33	MASTER INTERCOM CTRL PNL	20 A	1	--			500	1130			--	1	20 A	COILING DOOR	34	
	35	Spare	20 A	1	--					0	1200	--	1	20 A	DOCK LEVELER	36	
	37	PANEL 5UC	30 A	2	--	720	1860					--	3	40 A	PANEL 5LS	38	
	39	--	--	--	--			1080	1530			--	--	--	--	40	
	41	Spare	20 A	1	--					0	1920	--	--	--	--	42	
					Total Load:	**11.91 kVA**		**11.49 kVA**		**9.73 kVA**							
					Total Amps:	**101 A**		**98 A**		**81 A**							

Load Classification	Connected Load	Demand Factor	Estimated Demand	Panel Totals	
Spare	33121 VA	100.00%	33121 VA		
				Total Conn. Load:	**33121 VA**
				Total Est. Demand:	**33121 VA**
				Total Conn.:	**92 A**
				Total Est. Demand:	**92 A**
				Existing Total Conn. Load:	**33651 VA**
				Existing Total Conn:	**93 A**

CB Legend (blank = circuit breaker):
G = GFCI S = Shunt Trip D = Switching Duty A = AFCI H = HID Rated C = HACR Rated † = Existing Circuit ‡ = Revised Circuit

Notes:

Stantec — Panel

Name:	**5LM**	Volts:	208Y/120V	Mains Type:	MCB	Type:	
Location:	COMPONENT EXCHANGE 148	Phases:	3	Mains Rating:	225 A	AIC Rating:	10K
Supply From:	5HK (VIA TFMR 5TJ)	Wires:	4	MCB Rating:	150 A	Mounting:	Surface
Serves:				Lugs:	Single Lugs	Enclosure:	Type 1

Notes:

Key Note	CKT	Circuit Description	Trip	Poles	CB	A	A	B	B	C	C	CB	Poles	Trip	Circuit Description	CKT	Key Note
	1	SR-1 BUFFER GRINDER	20 A	1	--	1000	0					--	1	20 A	Spare	2	
	3	SR-2 SMALL PARTS CLEANER	20 A	1	--			1130	670			--	1	20 A	SR-9 JIB CRANE	4	
	5	SR-7 WORKBENCH W/VISE	20 A	1	--					180	180	--	1	20 A	CE-11 WORKBENCH W/VISE	6	
	7	SR-7 WORKBENCH W/VISE	20 A	1	--	180	180					--	1	20 A	CE-11 WORKBENCH W/VISE	8	
	9	SR-7 WORKBENCH W/VISE	20 A	1	--			180	180			--	1	20 A	CE-14 FLUID MANAGEMENT	10	
	11	SR-8 PARTS WASHER	20 A	1	--					670	0	--	1	20 A	Spare	12	
	13	RECEPTACLES	20 A	1	--	540	360					--	1	20 A	RECEPTACLES	14	
	15	RECEPTACLES	20 A	1	--			540	360			--	1	20 A	RECEPTACLES	16	
	17	RECEPTACLES	20 A	1	--					360	360	--	1	20 A	RECEPTACLES	18	
	19	RECEPTACLES	20 A	1	--	540	360					--	1	20 A	RECEPTACLES	20	
	21	RECEPTACLES	20 A	1	--			540	360			--	1	20 A	RECEPTACLES	22	
	23	RECEPTACLES	20 A	1	--					360	180	--	1	20 A	RECEPTACLES	24	
	25	REC. NETWORK RACK	20 A	1	--	360	1200					--	1	20 A	UP-5 SEWING MACHINE STA.	26	
	27	REC. NETWORK RACK	20 A	1	--			360	540			--	1	20 A	RECEPTACLES	28	
	29	REC. NETWORK RACK	20 A	1	--					360	360	--	1	20 A	RECEPTACLES	30	
1	31	**RTU 5-4**	40 A	2	**--**	**2965**	1590					--	1	20 A	OVERHEAD SECT. DOOR	32	
	33	--	**--**	**--**	**--**			**2965**	0			--	1	20 A	Spare	34	
1	35	**RTU 5-5**	40 A	2	**--**					**2965**	670	--	1	20 A	COILING DOOR	36	
	37	--	**--**	**--**	**--**	**2965**	1130					--	1	20 A	COILING DOOR	38	
	39	EF 5-23 (1/4)	20 A	1	--			670	300			--	1	20 A	FA REMOTE PWR SUPPLY	40	
	41	ROOF RECEPTACLES	20 A	1	--					720	510	--	1	20 A	Spare	42	
					Total Load:	**13.37 kVA**		**8.80 kVA**		**7.88 kVA**							
					Total Amps:	**113 A**		**74 A**		**66 A**							

Load Classification	Connected Load	Demand Factor	Estimated Demand	Panel Totals	
Spare	30040 VA	100.00%	30040 VA		
				Total Conn. Load:	**30040 VA**
				Total Est. Demand:	**30040 VA**
				Total Conn.:	**83 A**
				Total Est. Demand:	**83 A**
				Existing Total Conn. Load:	**25680 VA**
				Existing Total Conn:	**71 A**

CB Legend (blank = circuit breaker):
G = GFCI S = Shunt Trip D = Switching Duty A = AFCI H = HID Rated C = HACR Rated † = Existing Circuit ‡ = Revised Circuit

Notes:

Stantec — Panel

Name:	**5LN**	Volts:	208Y/120V	Mains Type:	MCB	Type:	
Location:	CLEAN SHOP 141	Phases:	3	Mains Rating:	225 A	AIC Rating:	10K
Supply From:	5HL (VIA XFMR 5TK)	Wires:	4	MCB Rating:	100 A	Mounting:	Surface
Serves:				Lugs:	Single Lugs	Enclosure:	Type 1

Notes:

Key Note	CKT	Circuit Description	Trip	Poles	CB	A	A	B	B	C	C	CB	Poles	Trip	Circuit Description	CKT	Key Note
	1	RECEPTACLES	20 A	1	--	900	300					--	1	20 A	BR-1 BRAKE LATHE (CNC)	2	
	3	RECEPTACLES	20 A	1	--			900	300			--	1	20 A	BR-2 BRAKE LATHE (STAR)	4	
	5	RECEPTACLES	20 A	1	--					900	300	--	1	20 A	BR-2 BRAKE LATHE (STAR)	6	
	7	BR-4 WORKBENCH	20 A	1	--	180	300					--	1	20 A	BR-2 BRAKE LATHE (STAR)	8	
	9	BR-4 WORKBENCH	20 A	1	--			180	**420**			**--**	1	20 A	**EF 5-38 (1/4)**	10	1
	11	BR-17 JIB CRANE	20 A	1	--					670	510	--	1	20 A	BR-9 DUST COLLECTOR	12	
	13	BR-17 JIB CRANE	20 A	1	--	670	1130					--	1	20 A	BR-11 ADJ WORK TABLE	14	
	15	BR-8	20 A	1	--			0	1130			--	1	20 A	BR-14 TOOL BIT GRINDER	16	
	17	Spare	20 A	1	--					0	1840	--	1	40 A	BR-15 PALLET WRAPPER	18	
	19	PC-12 JIB CRANE	20 A	3	--	1800	180					--	1	20 A	BR-16 ELECTRIC LIFT TRUCK	20	
	21	--	--	--	--			0	300			--	1	20 A	BR-2 BRAKE LATHE (STAR)	22	
	23	--	--	--	--					0	0	--	1	20 A	Spare	24	
	25	Space	--	1	--	--	830					--	1	20 A	PC-2 ABRASIVE PARTS WASH	26	
	27	Space	--	1	--			--	830			--	1	20 A	PC-2 ABRASIVE PARTS WASH	28	
	29	Space	--	1	--					--	0	--	1	20 A	Spare	30	
	31	Space	--	1	--	--	1130					--	1	20 A	COILING DOOR	32	
	33	Space	--	1	--			--	510			--	1	20 A	UH 5-6	34	
	35	Space	--	1	--					--	510	--	1	20 A	UH 5-7	36	
	37	Space	--	1	--	--	--					--	1	--	Space	38	
	39	Space	--	1	--			--	--			--	1	--	Space	40	
	41	Space	--	1	--					--	--	--	1	--	Space	42	
					Total Load:	**7.42 kVA**		**4.57 kVA**		**4.73 kVA**							
					Total Amps:	**62 A**		**38 A**		**40 A**							

Load Classification	Connected Load	Demand Factor	Estimated Demand	Panel Totals	
Spare	16720 VA	100.00%	16720 VA		
				Total Conn. Load:	**16720 VA**
				Total Est. Demand:	**16720 VA**
				Total Conn.:	**46 A**
				Total Est. Demand:	**46 A**
				Existing Total Conn. Load:	**16970 VA**
				Existing Total Conn:	**47 A**

CB Legend (blank = circuit breaker):
G = GFCI S = Shunt Trip D = Switching Duty A = AFCI H = HID Rated C = HACR Rated † = Existing Circuit ‡ = Revised Circuit

Notes:

Stantec — Panel

Name:	**5LP**	Volts:	208Y/120V	Mains Type:	MLO	Type:	
Location:	ELECTRICAL RM 202	Phases:	3	Mains Rating:	225 A	AIC Rating:	10K
Supply From:	DB5B	Wires:	4	Max Rating:	225 A	Mounting:	Surface
Serves:				Lugs:	Single Lugs	Enclosure:	Type 1

Notes:

Key Note	CKT	Circuit Description	Trip	Poles	CB	A	A	B	B	C	C	CB	Poles	Trip	Circuit Description	CKT	Key Note
	1	REC. REBUILD OFFICE	20 A	1	--	180	180					--	1	20 A	REC. MANAGER OFFICE	2	
	3	REC. INTERNS OFFICE	20 A	1	--			360	180			--	1	20 A	REC. ASSIST. OFFICE	4	
	5	PROJECTION SCREEN	20 A	1	--					510	1000	--	1	20 A	REFRIGERATOR	6	
	7	RECEPTACLES	20 A	1	--	900	1200					--	1	20 A	MICROWAVE	8	
	9	RECEPTACLES	20 A	1	--			540	180			--	1	20 A	RECEPTACLE COUNTER	10	
	11	RECEPTACLES	20 A	1	--					540	1200	--	1	20 A	GARBAGE DISPOSAL	12	
	13	RECEPTACLES	20 A	1	--	720	720					--	1	20 A	RECEPTACLES	14	
	15	RECEPTACLES	20 A	1	--			900	720			--	1	20 A	RECEPTACLES	16	
	17	RECEPTACLES	20 A	1	--					720	720	--	1	20 A	RECEPTACLES	18	
	19	RECEPTACLES	20 A	1	--	720	360					--	1	20 A	RECEPTACLES	20	
	21	RECEPTACLES	20 A	1	--			720	540			--	1	20 A	RECEPTACLES	22	
	23	RECEPTACLES	20 A	1	--					540	360	--	1	20 A	RECEPTACLES	24	
	25	ROOF RECPT.	20 A	1	--	0	900					--	1	20 A	RECEPTACLES RESTROOM	26	
	27	Spare	20 A	1	--			0	500			--	1	20 A	DRINKING FOUNTAIN	28	
	29	Spare	20 A	1	--					0	1300	--	1	20 A	COPIER	30	
	31	PANEL 5LW	50 A	3	--	1080	**156**					**--**	1	20 A	**EF 5-11 (1/15)**	32	1
	33	--	--	--	--			900	55			--	1	20 A	EF 5-12 (1/15)	34	
	35	--	--	--	--					720	**420**	**--**	1	20 A	**EF 5-13 (1/4)**	36	1
	37	PANEL 5U	40 A	2	--	2340	55					--	1	20 A	EF -14 (1/15)	38	
	39	--	--	--	--			2160	55			--	1	20 A	EF 5-15 (1/15)	40	
	41	HOT WATER DISPENSER	20 A	1	--					1300	20	--	1	20 A	BD-1 BY-PASS DAMPER	42	
					Total Load:	**9.51 kVA**		**7.81 kVA**		**9.35 kVA**							
					Total Amps:	**81 A**		**65 A**		**80 A**							

Load Classification	Connected Load	Demand Factor	Estimated Demand	Panel Totals	
Spare	26671 VA	100.00%	26671 VA		
				Total Conn. Load:	**26671 VA**
				Total Est. Demand:	**26671 VA**
				Total Conn.:	**74 A**
				Total Est. Demand:	**74 A**
				Existing Total Conn. Load:	**26775 VA**
				Existing Total Conn:	**74 A**

CB Legend (blank = circuit breaker):
G = GFCI S = Shunt Trip D = Switching Duty A = AFCI H = HID Rated C = HACR Rated † = Existing Circuit ‡ = Revised Circuit

Notes:

KEY NOTES:

1 EXISTING EQUIPMENT TO BE REPLACED.

5LK	5LM
5LN	5LP

REGISTERED PROFESSIONAL ENGINEER
PAUL K. ERICSON
No. 11219
exp.06/30/2025
ELECTRICAL
STATE OF CALIFORNIA

05-13-2024

Stantec
801 S. Figueroa Street, Suite 300
Los Angeles, CA 90017

Copyright Reserved
The Contractor shall verify and be responsible for all dimensions. DO NOT scale the drawing - any errors or omissions shall be reported to Stantec without delay.
The Copyrights to all designs and drawings are the property of Stantec. Reproduction or use for any purpose other than that authorized by Stantec is forbidden.

REVISION	DESCRIPTION	DATE
4	100% RESUBMITTAL	05/13/2024
3	100% CONSTRUCTION DRAWING SUBMITTAL	03/27/2024
2	90% UPDATED CONSTRUCTION SUBMITTAL	02/13/2024
1	90% CONSTRUCTION DRAWING SUBMITTAL	12/07/2023

REPLACEMENT OF MECHANICAL UNITS AT SANTA ANA BUS BASE

4301 W. MAC ARTHUR BLVD., SANTA ANA, CA

PANEL SCHEDULES

JOB #:	
DESIGN BY:	IZ
DRAWN BY:	AD
CHECKED BY:	PKE
DATE:	02/13/2024
SCALE:	NTS
SHEET:	**E-702F**

OCTA
ORANGE COUNTY
TRANSPORTATION AUTHORITY
550 SOUTH MAIN STREET, ORANGE, CA

Autodesk Docs://2014233703_Santa_Ana_Bus/elec_SantaAnaBus_2014233703.rvt
5/8/2024 9:59:50 AM

Panel 5LA

Stantec — Panel

Name: **5LA**	Volts: 208Y/120V	Mains Type: MLO	Type:
Location:	Phases: 3	Mains Rating: 150 A	AIC Rating: 10K
Supply From:	Wires: 4	Max Rating: 150 A	Mounting: Surface
Serves:		Lugs: Single Lugs	Enclosure: Type 1

Notes:

CKT	Circuit Description	Trip	Poles	CB	A	A	B	B	C	C	CB	Poles	Trip	Circuit Description	CKT	Key Note
1	RECEPTACLES	20 A	1	--	720	300					--	1	20 A	PANEL 'LPCSE'	2	
3	RECEPTACLES	20 A	1	--			720	300			--	1	20 A	CAMERAS 1&2	4	
5	PORTABLE LIGHT REC.	20 A	1	--					80	**768**	--	1	20 A	**EF 5-35**	6	⟨1⟩
7	WS 5-1	20 A	1	--	180	0					--	1	20 A	LIFT CONTROL	8	
9	Spare	20 A	1	--			0	0			--	1	20 A	Spare	10	
11	Spare	20 A	1	--					0	0	--	1	20 A	Spare	12	
13	Space	--	1	--	--	--					--	1	--	Space	14	
15	Space	--	1	--			--	--			--	1	--	Space	16	
17	Space	--	1	--					--	--	--	1	--	Space	18	
19	Space	--	1	--	--	--					--	1	--	Space	20	
21	Space	--	1	--			--	--			--	1	--	Space	22	
23	Space	--	1	--					--	--	--	1	--	Space	24	
25	Space	--	1	--	--	--					--	1	--	Space	26	
27	Space	--	1	--			--	--			--	1	--	Space	28	
29	Space	--	1	--					--	--	--	1	--	Space	30	
31	Space	--	1	--	--	--					--	1	--	Space	32	
33	Space	--	1	--			--	--			--	1	--	Space	34	
35	Space	--	1	--					--	--	--	1	--	Space	36	
37	Space	--	1	--	--	7135					--	3	100 A	PANEL 5LB	38	
39	Space	--	1	--			--	7510			--	--	--	--	40	
41	Space	--	1	--					--	5735	--	--	--	--	42	
				Total Load:	**8.34 kVA**		**8.53 kVA**		**6.58 kVA**							
				Total Amps:	**72 A**		**73 A**		**55 A**							

Load Classification	Connected Load	Demand Factor	Estimated Demand	Panel Totals	
Spare	23448 VA	100.00%	23448 VA		
				Total Conn. Load:	**23448 VA**
				Total Est. Demand:	**23448 VA**
				Total Conn.:	**65 A**
				Total Est. Demand:	**65 A**

CB Legend (blank = circuit breaker):
G = GFCI S = Shunt Trip D = Switching Duty A = AFCI H = HID Rated C = HACR Rated † = Existing Circuit ‡ = Revised Circuit

Notes:

Panel 5LQ

Stantec — Panel

Name: **5LQ**	Volts: 208Y/120V	Mains Type: MLO	Type:
Location: SMALL TOOL RM 130	Phases: 3	Mains Rating: 225 A	AIC Rating: 10K
Supply From: DB5B	Wires: 4	Max Rating: 225 A	Mounting: Surface
Serves:		Lugs: Single Lugs	Enclosure: Type 1

Notes:

Key Note	CKT	Circuit Description	Trip	Poles	CB	A	A	B	B	C	C	CB	Poles	Trip	Circuit Description	CKT
	1	RECEPTACLES	20 A	1	--	900	1000					--	1	20 A	REFRIGERATOR	2
	3	RECEPTACLES	20 A	1	--			900	1000			--	1	20 A	REFRIGERATOR	4
	5	RECEPTACLES	20 A	1	--					900	360	--	1	20 A	RECEPTACLES COUNTER	6
	7	RECEPTACLES	20 A	1	--	540	1590					--	1	20 A	GARBAGE DISPOSAL	8
	9	RECEPTACLES	20 A	1	--			540	1300			--	1	20 A	WATER HEATER	10
	11	RECEPTACLES	20 A	1	--					540	1200	--	1	20 A	MICROWAVE	12
	13	RECEPTACLES	20 A	1	--	720	1200					--	1	20 A	MICROWAVE	14
	15	RECEPTACLES	20 A	1	--			540	1200			--	1	20 A	MICROWAVE	16
	17	RECEPTACLES	20 A	1	--					720	1200	--	1	20 A	VENDING MACHINE	18
	19	RECEPTACLES	20 A	1	--	720	1200					--	1	20 A	VENDING MACHINE	20
	21	RECEPTACLES	20 A	1	--			720	1200			--	1	20 A	VENDING MACHINE	22
	23	RECEPTACLES	20 A	1	--					900	1200	--	1	20 A	VENDING MACHINE	24
	25	REC. WARRANTY OFF.	20 A	1	--	540	1200					--	1	20 A	VENDING MACHINE	26
	27	REC. PARTS (EAST)	20 A	1	--			360	500			--	1	20 A	DRINING FOUNTAIN	28
	29	REC. PARTS OFFICE	20 A	1	--					180	1590	--	1	20 A	RR-20 FREON RECOVERY	30
	31	REC. PARTS (SOUTH)	20 A	1	--	360	360					--	1	20 A	RECEPTACLES	32
	33	UH 5-2	20 A	1	--			385	540			--	1	20 A	RECEPTACLES	34
	35	UH 5-3	20 A	1	--					385	540	--	1	20 A	RECEPTACLES	36
⟨1⟩	37	**AC 5-2**	**25 A**	2	--	**1737**	440					--	3	50 A	PANEL 5V	38
	39	--	--	--	--			**1737**	1300			--	--	--	--	40
	41	ROOF RECEPTACLES	20 A	1	--					720	720	--	--	--	--	42
					Total Load:	**12.51 kVA**		**12.22 kVA**		**11.16 kVA**						
					Total Amps:	**106 A**		**103 A**		**93 A**						

Load Classification	Connected Load	Demand Factor	Estimated Demand	Panel Totals	
Spare	35884 VA	100.00%	35884 VA		
				Total Conn. Load:	**35884 VA**
				Total Est. Demand:	**35884 VA**
				Total Conn.:	**100 A**
				Total Est. Demand:	**100 A**
				Existing Total Conn. Load:	**33530 VA**
				Existing Total Conn:	**99 A**

CB Legend (blank = circuit breaker):
G = GFCI S = Shunt Trip D = Switching Duty A = AFCI H = HID Rated C = HACR Rated † = Existing Circuit ‡ = Revised Circuit

Notes:

Panel 5LS

Stantec — Panel

Name: **5LS**	Volts: 208Y/120V	Mains Type: MLO	Type:
Location: STORAGE 155	Phases: 3	Mains Rating: 100 A	AIC Rating: 10K
Supply From: 5LK	Wires: 4	Max Rating: 100 A	Mounting: Surface
Serves:		Lugs: Single Lugs	Enclosure: Type 1

Notes:

CKT	Circuit Description	Trip	Poles	CB	A	A	B	B	C	C	CB	Poles	Trip	Circuit Description	CKT	Key Note
1	COIN COUNTER	20 A	1	--	500	**180**					--	1	20 A	**EF 5-26 (1/10)**	2	⟨1⟩
3	COIN COUNTER	20 A	1	--			500	30			--	1	20 A	EF 5-27 (1/40)	4	
5	CURRENCY STRAPPER	20 A	1	--					500	**420**	--	1	20 A	**EF 5-41 (1/4)**	6	⟨1⟩
7	COMPUTER PRINTER	20 A	1	--	500	180					--	1	20 A	ROOF RECEPTACLE	8	
9	COIN COUNTER	20 A	1	--			500	--			--	1	--	Space	10	
11	COIN COUNTER	20 A	1	--					500	--	--	1	--	Space	12	
13	CURRENCY STRAPPER	20 A	1	--	500	--					--	1	--	Space	14	
15	COIN COUNTER	20 A	1	--			500	--			--	1	--	Space	16	
17	COIN COUNTER	20 A	1	--					500	--	--	1	--	Space	18	
19	Space	--	1	--	--	--					--	1	--	Space	20	
21	Space	--	1	--			--	--			--	1	--	Space	22	
23	Space	--	1	--					--	--	--	1	--	Space	24	
25	Space	--	1	--	--	--					--	1	--	Space	26	
27	Space	--	1	--			--	--			--	1	--	Space	28	
29	Space	--	1	--					--	--	--	1	--	Space	30	
31	Space	--	1	--	--	--					--	1	--	Space	32	
33	Space	--	1	--			--	--			--	1	--	Space	34	
35	Space	--	1	--					--	--	--	1	--	Space	36	
37	Space	--	1	--	--	--					--	1	--	Space	38	
39	Space	--	1	--			--	--			--	1	--	Space	40	
41	Space	--	1	--					--	--	--	1	--	Space	42	
				Total Load:	**1.86 kVA**		**1.53 kVA**		**1.92 kVA**							
				Total Amps:	**16 A**		**13 A**		**16 A**							

Load Classification	Connected Load	Demand Factor	Estimated Demand	Panel Totals	
Spare	5310 VA	100.00%	5310 VA		
				Total Conn. Load:	**5310 VA**
				Total Est. Demand:	**5310 VA**
				Total Conn.:	**15 A**
				Total Est. Demand:	**15 A**
				Existing Total Conn. Load:	**5430 VA**
				Existing Total Conn:	**15 A**

CB Legend (blank = circuit breaker):
G = GFCI S = Shunt Trip D = Switching Duty A = AFCI H = HID Rated C = HACR Rated † = Existing Circuit ‡ = Revised Circuit

Notes:

Panel 5LT

Stantec — Panel

Name: **5LT**	Volts: 240V/120V	Mains Type: MCB	Type:
Location: ELECTRICAL RM 202	Phases: 1	Mains Rating: 225 A	AIC Rating: 10K
Supply From: XFMR 5TM	Wires: 3	MCB Rating: 125 A	Mounting: Surface
Serves:		Lugs: Single Lugs	Enclosure: Type 1

Notes:

Key Note	CKT	Circuit Description	Trip	Poles	CB	A	A	B	B	C	C	CB	Poles	Trip	Circuit Description	CKT
	1	OVERHEAD SECT. DOOR	20 A	1	--	1590	1590					--	1	20 A	OVERHEAD SECT. DOOR	2
	3	OVERHEAD SECT. DOOR	20 A	1	--			1590	1590			--	1	20 A	OVERHEAD SECT. DOOR	4
	5	OVERHEAD SECT. DOOR	20 A	1	--	1590	1590					--	1	20 A	OVERHEAD SECT. DOOR	6
	7	OVERHEAD SECT. DOOR	20 A	1	--			1590	1590			--	1	20 A	OVERHEAD SECT. DOOR	8
	9	OVERHEAD SECT. DOOR	20 A	1	--	1590	1590					--	1	20 A	OVERHEAD SECT. DOOR	10
	11	OVERHEAD SECT. DOOR	20 A	1	--			1590	0			--	1	20 A	HVAC TIME CLOCK	12
⟨1⟩	13	**EF 5-42**	20 A	1	--	**696**	0					--	1	20 A	Spare	14
	15	Space	--	1	--			--	--			--	1	--	Space	16
	17	Space	--	1	--	--	--					--	1	--	Space	18
	19	Space	--	1	--			--	--			--	1	--	Space	20
					Total Load:	**10.24 kVA**		**7.95 kVA**		**0.00 kVA**						
					Total Amps:	**85 A**		**66 A**		**0 A**						

Load Classification	Connected Load	Demand Factor	Estimated Demand	Panel Totals	
Spare	18186 VA	100.00%	18186 VA		
				Total Conn. Load:	**18186 VA**
				Total Est. Demand:	**18186 VA**
				Total Conn.:	**76 A**
				Total Est. Demand:	**76 A**
				Existing Total Conn. Load:	**18320 VA**
				Existing Total Conn:	**76 A**

CB Legend (blank = circuit breaker):
G = GFCI S = Shunt Trip D = Switching Duty A = AFCI H = HID Rated C = HACR Rated † = Existing Circuit ‡ = Revised Circuit

Notes:

⟨#⟩ KEY NOTES:

1 EXISTING EQUIPMENT TO BE REPLACED.

5LA	5LQ
5LS	5LT

REGISTERED PROFESSIONAL ENGINEER
PAUL K. ERICSON
No. 11219
exp.06/30/2025
ELECTRICAL
STATE OF CALIFORNIA

05-13-2024

Stantec
801 S. Figueroa Street, Suite 300
Los Angeles, CA 90017

Copyright Reserved
The Contractor shall verify and be responsible for all dimensions. DO NOT scale the drawing - any errors or omissions shall be reported to Stantec without delay.
The Copyrights to all designs and drawings are the property of Stantec. Reproduction or use for any purpose other than that authorized by Stantec is forbidden.

REVISION	DESCRIPTION	DATE
4	100% RESUBMITTAL	05/13/2024
3	100% CONSTRUCTION DRAWING SUBMITTAL	03/27/2024
2	90% UPDATED CONSTRUCTION SUBMITTAL	02/13/2024
1	90% CONSTRUCTION DRAWING SUBMITTAL	12/07/2023

REPLACEMENT OF MECHANICAL UNITS AT SANTA ANA BUS BASE
4301 W. MAC ARTHUR BLVD., SANTA ANA, CA

PANEL SCHEDULES

JOB #:	
DESIGN BY:	IZ
DRAWN BY:	AD
CHECKED BY:	PKE
DATE:	02/13/2024
SCALE:	NTS
SHEET:	**E-703F**

OCTA
ORANGE COUNTY
TRANSPORTATION AUTHORITY
550 SOUTH MAIN STREET, ORANGE, CA

Stantec — Panel

Name: **6LB** | Volts: 208Y/120V | Mains Type: MLO | Type:
Location: | Phases: 3 | Mains Rating: 225 A | AIC Rating: 10
Supply From: | Wires: 4 | Max Rating: 225 A | Mounting: Surface
Serves: | Lugs: Single Lugs | Enclosure: Type 1

Notes:

CKT	Circuit Description	Trip	Poles	CB	A		B		C		CB	Poles	Trip	Circuit Description	CKT
1	**EF 6-4 (1/15)**	20 A	1	--	**156**	**3318**					--	2	**50 A**	**RTU 6-1**	2
3	EF 6-5 (1/60)	20 A	1	--			20	**3318**			--	--	--	--	4
5	**EF 6-6 (1/10)**	20 A	1	--					**180**	**2143**	--	2	40 A	**HP 6-1**	6
7	BC-14 FLUID MANAGEMENT	20 A	1	--	500	**2143**					--	--	--	--	8
9	**EF 6-8 (1/10)**	20 A	1	--			**180**	180			--	1	20 A	FACP-6	10
11	WATER HEATER/CIRC. PUMP	20 A	1	--					600	180	--	1	20 A	CC6	12
13	DRINIIKING FOUNTAIN	20 A	1	--	500	100					--	1	20 A	FUEL DISPENSER/CONT.	14
15	REC. OFFICE	20 A	1	--			360	100			--	1	20 A	FUEL DISPENSER/CONT.	16
17	RECEPTACLES DATA RACK	20 A	1	--					360	100	--	1	20 A	FUEL DISPENSER/CONT.	18
19	RECEPTACLES DATA RACK	20 A	1	--	360	100					--	1	20 A	FUEL DISPENSER/CONT.	20
21	RECEPTACLES DROP	20 A	1	--			360	100			--	1	20 A	FUEL DISPENSER/CONT.	22
23	RECEPTACLES DROP	20 A	1	--					360	1590	--	1	20 A	F-2 GASOLINE DISPENSER	24
25	RECEPTACLES	20 A	1	--	540	533					--	3	20 A	SP-1	26
27	RECEPTACLES	20 A	1	--			360	533			--	--	--	--	28
29	RECEPTACLES ROOF RTU-61	20 A	1	--					360	533	--	--	--	--	30
31	RECEPTACLES RESTROOM	20 A	1	--	360	150					--	1	20 A	AUTO DRAIN VALVES	32
33	RECEPTACLES PUMP ROOM	20 A	1	--			540	800			--	1	30 A	POWER SUPPLY CAMERAS	34
35	RECEPTACLES TELEPHONE	20 A	1	--					360	800	--	1	20 A	POWER SUPPLY CAMERAS	36
37	DRINIIKING FOUNTAIN	20 A	1	--	500	**1389**					--	2	**25 A**	**AC 6-1**	38
39	LAV/UR CONTROLS	20 A	1	--			300	**1389**			--	--	--	--	40
41	PHOTOSENSOR CTRL CAB.	20 A	1	--					100	100	--	1	20 A	FSD RM 116 & 118	42
				Total Load:	**10.65 kVA**		**8.54 kVA**		**7.77 kVA**						
				Total Amps:	**90 A**		**72 A**		**65 A**						

Load Classification	Connected Load	Demand Factor	Estimated Demand	Panel Totals	
Spare	26955 VA	100.00%	26955 VA	**Total Conn. Load:**	**26955 VA**
				Total Est. Demand:	**26955 VA**
				Total Conn.:	**75 A**
				Total Est. Demand:	**75 A**
				Existing Total Conn. Load:	**21984 VA**
				Existing Total Conn:	**61 A**

CB Legend (blank = circuit breaker):
G = GFCI S = Shunt Trip D = Switching Duty A = AFCI H = HID Rated C = HACR Rated † = Existing Circuit ‡ = Revised Circuit

Notes:

Stantec — Panel

Name: **8LA** | Volts: 208Y/120V | Mains Type: MCB | Type:
Location: DETAILING/CLEANING 101 | Phases: 3 | Mains Rating: 225 A | AIC Rating: 10
Supply From: 8HA (VIA XFMR 8TA) | Wires: 4 | MCB Rating: 100 A | Mounting: Surface
Serves: | Lugs: Single Lugs | Enclosure: Type 1

Notes:

CKT	Circuit Description	Trip	Poles	CB	A		B		C		CB	Poles	Trip	Circuit Description	CKT
1	RECEPTACLES	20 A	1	--	720	900					--	3	20 A	CL-11 WASHER	2
3	RECEPTACLES	20 A	1	--			720	900			--	--	--	--	4
5	RECEPTACLES	20 A	1	--					720	900	--	--	--	--	6
7	RECEPTACLES	20 A	1	--	500	900					--	3	20 A	CL-12 DRYER	8
9	RECEPTACLES	20 A	1	--			500	900			--	--	--	--	10
11	RECEPTACLES	20 A	1	--					500	900	--	--	--	--	12
13	RECEPTACLES	20 A	1	--	500	360					--	1	20 A	RECEPTACLES DROP	14
15	CAMERAS 12 & 13	20 A	1	--			300	360			--	1	20 A	RECEPTACLES DROP	16
17	Spare	20 A	1	--					0	360	--	1	20 A	RECEPTACLES DROP	18
19	Spare	20 A	1	--	0	360					--	1	20 A	RECEPTACLES DROP	20
21	Spare	20 A	1	--			0	0			--	1	20 A	Spare	22
23	Spare	20 A	1	--					0	**348**	--	1	20 A	**EF 8-1**	24
25	Spare	20 A	1	--	0	1120					--	1	20 A	VACUUM REEL	26
27	Spare	20 A	1	--			0	1120			--	1	20 A	VACUUM REEL	28
29	Spare	20 A	1	--					0	1120	--	1	20 A	VACUUM REEL	30
31	Spare	20 A	1	--	0	1120					--	1	20 A	VACUUM REEL	32
33	Spare	20 A	1	--			0	300			--	1	20 A	Spare	34
35	Spare	20 A	1	--					0	50	--	1	20 A	WATER HEATER	36
37	Space	--	1	--	--	50					--	1	20 A	DRAIN VALVE	38
39	Space	--	1	--			--	--			--	1	--	Space	40
41	Space	--	1	--					--	--	--	1	--	Space	42
				Total Load:	**6.53 kVA**		**5.10 kVA**		**4.90 kVA**						
				Total Amps:	**55 A**		**43 A**		**41 A**						

Load Classification	Connected Load	Demand Factor	Estimated Demand	Panel Totals	
Spare	16528 VA	100.00%	16528 VA	**Total Conn. Load:**	**16528 VA**
				Total Est. Demand:	**16528 VA**
				Total Conn.:	**46 A**
				Total Est. Demand:	**46 A**
				Existing Total Conn. Load:	**16850 VA**
				Existing Total Conn:	**47 A**

CB Legend (blank = circuit breaker):
G = GFCI S = Shunt Trip D = Switching Duty A = AFCI H = HID Rated C = HACR Rated † = Existing Circuit ‡ = Revised Circuit

Notes:

KEY NOTES:

1 EXISTING EQUIPMENT TO BE REPLACED.

REGISTERED PROFESSIONAL ENGINEER PAUL K. ERICSSON No. 11219 exp.06/30/2025 ELECTRICAL STATE OF CALIFORNIA

05-13-2024

6LB	7LA
8LA	---

Stantec
801 S. Figueroa Street, Suite 300
Los Angeles, CA 90017

Copyright Reserved
The contractor shall verify and be responsible for all dimensions. DO NOT scale the drawing - any errors or omissions shall be reported to Stantec without delay.
This drawing is the property of Stantec and shall not be reproduced or used for other purposes than that authorized by Stantec in writing.

REVISION	DESCRIPTION	DATE
4	100% RESUBMITTAL	05/13/2024
3	100% CONSTRUCTION DRAWING SUBMITTAL	03/27/2024
2	90% UPDATED CONSTRUCTION SUBMITTAL	02/13/2024
1	90% CONSTRUCTION DRAWING SUBMITTAL	12/07/2023

REPLACEMENT OF MECHANICAL UNITS AT SANTA ANA BUS BASE
4301 W. MAC ARTHUR BLVD., SANTA ANA, CA

PANEL SCHEDULES

JOB #:
DESIGN BY: IZ
DRAWN BY: AD
CHECKED BY: PKE
DATE: 02/13/2024
SCALE: NTS
SHEET: **E-704F**

OCTA
ORANGE COUNTY TRANSPORTATION AUTHORITY
550 SOUTH MAIN STREET, ORANGE, CA

Autodesk Docs://2014233703_Santa_Ana_Bus/elec_SantaAnaBus_2014233703.rvt
5/8/2024 9:59:52 AM

EQUIP TAG	DESCRIPTION	LOCATION	SERVICE	MOTOR POWER (OR) HP	ELECTRICAL DATA VOLTS	ø	HZ	FLA(A)	MCA(A)	MOCP(A)	DISCONNECT FRAME(A)	FUSE SIZE (A)	BY	STARTER TYPE	BY	EMERGENCY / NORMAL	CONDUIT REF #	CONDUIT	WIRE	PANEL	CIRCUIT	REMARK
ROOF TOP UNIT, 65 kAIC RATED																						
RTU 4-1	PACKAGED ROOFTOP UNIT	OPERATIONS BUILDING	OPER. BLDG	17.4 kW	480	3	60	-	41	50	60	50	DIV.26	N/A	N/A	NORMAL	19	1"	3#6 & 1#8G	DB4	4	POWER WIRING AND DISCONNECT BY EC
																						120V CIRCUIT FOR IONIZATION SYSTEM
RTU 4-2	PACKAGED ROOFTOP UNIT	OPERATIONS BUILDING	OPER. BLDG	7.1 kW	480	3	60	-	18	20	30	20	DIV.26	N/A	N/A	NORMAL	20	3/4"	3#12 & 1#12G	DB4	5	POWER WIRING AND DISCONNECT BY EC
																						120V CIRCUIT FOR IONIZATION SYSTEM
RTU 4-3	PACKAGED ROOFTOP UNIT	OPERTIONS BUILDING	OPER. BLDG	11.8 kW	480	3	60	-	29	40	60	40	DIV.26	N/A	N/A	NORMAL	21	3/4"	3#8 & 1#10G	DB4	6	POWER WIRING AND DISCONNECT BY EC
																						120V CIRCUIT FOR IONIZATION SYSTEM
RTU 4-4	PACKAGED ROOFTOP UNIT	OPERATIONS BUILDING	OPER. BLDG	10.5 kW	480	3	60	-	25	30	30	30	DIV.26	N/A	N/A	NORMAL	22	3/4"	3#10 & 1#10G	DB4	7	POWER WIRING AND DISCONNECT BY EC
																						120V CIRCUIT FOR IONIZATION SYSTEM
RTU 5-1	PACKAGED ROOFTOP UNIT	MAINTENANCE BUILDING	2ND FLR OFFICES	19.7 kW	480	3	60	-	49	60	60	50	DIV.26	N/A	N/A	NORMAL	106	1"	3#6 & 1#8G	5HP	1	POWER WIRING AND DISCONNECT BY EC
																						120V CIRCUIT FOR IONIZATION SYSTEM
RTU 5-2	PACKAGED ROOFTOP UNIT	MAINTENANCE BUILDING	BREAK ROOM	17.6 kW	480	3	60	-	41	50	60	50	DIV.26	N/A	N/A	NORMAL	107	1"	3#6 & 1#8G	5HP	2	POWER WIRING AND DISCONNECT BY EC
																						120V CIRCUIT FOR IONIZATION SYSTEM
RTU 5-3	PACKAGED ROOFTOP UNIT	MAINTENANCE BUILDING	REVENUE OFFICES	17.6 kW	480	3	60	-	41	50	60	50	DIV.26	N/A	N/A	NORMAL	108	1-1/4"	3#4 & 1#8G	5HP	3	POWER WIRING AND DISCONNECT BY EC
																						120V CIRCUIT FOR IONIZATION SYSTEM
RTU 5-4	PACKAGED AIR...	MAINTENANCE BUILDING	OFFICE	1.8 kW	208	1	60	-	20.6	30	30	30	DIV.26	N/A	N/A	NORMAL	-	3/4"	2#10 & 1#10G	5LM	31,33	POWER WIRING AND DISCONNECT BY EC
																						120V CIRCUIT FOR IONIZATION SYSTEM
RTU 5-5	PACKAGED AIR...	MAINTENANCE BUILDING	OFFICE	1.8 kW	208	1	60	-	20.6	30	30	30	DIV.26	N/A	N/A	NORMAL	-	3/4"	2#10 & 1#10G	5LM	35,37	POWER WIRING AND DISCONNECT BY EC
																						120V CIRCUIT FOR IONIZATION SYSTEM
RTU 6-1	PACKAGED AIR...	FUEL/BRAKE/TIRE REPAIR...	FUEL BLDG	4.1 kW	208	1	60	-	31.9	50	60	50	DIV.26	N/A	N/A	NORMAL	-	3/4"	2#10 & 1#10G	6LB	2,4	POWER WIRING AND DISCONNECT BY EC
																						120V CIRCUIT FOR IONIZATION SYSTEM
HEATING PUMP, 65 kAIC RATED																						
HP 5-1	HEAT PUMP	MAINTENANCE BUILDING	BLDG OFFICE		208	1	60	-	20.6	30	30	30	DIV.26	N/A	N/A	NORMAL	-	3/4"	2#10 & 1#10G	5LG	22.24	POWER WIRING AND DISCONNECT BY EC
																						120V CIRCUIT FOR IONIZATION SYSTEM
HP 6-1	HEAT PUMP	FUEL/BRAKE/TIRE REPAIR...	CONTROL		208	1	60	-	20.6	30	30	30	DIV.26	N/A	N/A	NORMAL	-	3/4"	2#10 & 1#10G	LB	6,8	POWER WIRING AND DISCONNECT BY EC
																						120V CIRCUIT FOR IONIZATION SYSTEM
AIR CONDITIONING UNIT, 65 kAIC RATED																						
AC 4-1	PACKAGED COOLING UNIT	OPERATIONS BUILDING	COMPUTER ROOM	3.4kW	208	1	60	-	16.7	25	30	25	DIV.26	N/A	N/A	NORMAL	-	3/4"	2#10 & 1#10G	4LC	30,32	POWER WIRING AND DISCONNECT BY EC
																						120V CIRCUIT FOR LIGHT AND RECEPTACLE
AC 4-2	PACKAGED COOLING UNIT	OPERATIONS BUILDING	TELECOM ROOM	3.4kW	208	1	60	-	16.7	25	30	25	DIV.26	N/A	N/A	NORMAL	-	3/4"	2#10 & 1#10G	4LC	34,36	POWER WIRING AND DISCONNECT BY EC
																						120V CIRCUIT FOR LIGHT AND RECEPTACLE
AC 5-1	PACKAGED COOLING UNIT	MAINTENANCE BUILDING	COMM ROOM	3.4kW	208	1	60	-	16.7	25	30	25	DIV.26	N/A	N/A	NORMAL	-	3/4"	2#10 & 1#10G	5LJ	34,36	POWER WIRING AND DISCONNECT BY EC
																						120V CIRCUIT FOR LIGHT AND RECEPTACLE
AC 5-2	PACKAGED COOLING UNIT	MAINTENANCE BUILDING	LAN ROOM	3.4kW	208	1	60	-	16.7	25	30	25	DIV.26	N/A	N/A	NORMAL	-	3/4"	2#10 & 1#10G	5LQ	37,39	POWER WIRING AND DISCONNECT BY EC
																						120V CIRCUIT FOR LIGHT AND RECEPTACLE
AC 6-1	PACKAGED COOLING UNIT	FUEL/BRAKE/TIRE REPAIR...	COMM	3.4kW	208	1	60	-	16.7	25	30	25	DIV.26	N/A	N/A	NORMAL	-	3/4"	2#10 & 1#10G	6LB	38,40	POWER WIRING AND DISCONNECT BY EC
																						120V CIRCUIT FOR LIGHT AND RECEPTACLE
MAKEUP AIR UNITS																						
MAU 5-1	MAKEUP AIR UNIT	MAINTENANCE BUILDING	OPER. BLDG	20	480	3	60	28.1	35	50	60	50	DIV.26	N/A	N/A	NORMAL	-	3/4"	3#10 & 1#10G	5HP	4	POWER WIRING AND DISCONNECT BY EC
MAU 5-2	MAKEUP AIR UNIT	MAINTENANCE BUILDING	OPER. BLDG	15	480	3	60	22.1	27.6	40	60	40	DIV.26	N/A	N/A	NORMAL	110	3/4"	3#10 & 1#10G	5HP	5	POWER WIRING AND DISCONNECT BY EC
MAU 5-3	MAKEUP AIR UNIT	MAINTENANCE BUILDING	OPER. BLDG	15	480	3	60	22.1	27.6	40	60	40	DIV.26	N/A	N/A	NORMAL	111	3/4"	3#10 & 1#10G	5HP	6	POWER WIRING AND DISCONNECT BY EC
MAU 5-4	MAKEUP AIR UNIT	MAINTENANCE BUILDING	OPER. BLDG	15	480	3	60	22.1	27.6	40	60	40	DIV.26	N/A	N/A	NORMAL	112	3/4"	3#10 & 1#10G	5HP	7	POWER WIRING AND DISCONNECT BY EC
MAU 5-5	MAKEUP AIR UNIT	MAINTENANCE BUILDING	2ND FLR OFFICES	15	480	3	60	22.1	27.6	40	60	40	DIV.26	N/A	N/A	NORMAL	113	3/4"	3#10 & 1#10G	5HP	8	POWER WIRING AND DISCONNECT BY EC
MAU 5-6	MAKEUP AIR UNIT	MAINTENANCE BUILDING	BREAK ROOM	15	480	3	60	22.1	27.6	40	60	40	DIV.26	N/A	N/A	NORMAL	114	1"	3#10 & 1#10G	5HP	9	POWER WIRING AND DISCONNECT BY EC
MAU 5-7	MAKEUP AIR UNIT	MAINTENANCE BUILDING	REVENUE OFFICES	7 1/2	480	3	60	12.1	15.1	20	30	20	DIV.26	N/A	N/A	NORMAL	115	3/4"	3#12 & 1#12G	5HP	10	POWER WIRING AND DISCONNECT BY EC
MAU 5-8	MAKEUP AIR UNIT	MAINTENANCE BUILDING	OFFICE	3	480	3	60	5.9	7.4	15	30	15	DIV.26	N/A	N/A	NORMAL	140	3/4"	3#12 & 1#12G	5HP	11	POWER WIRING AND DISCONNECT BY EC
MAU 5-9 (E)	MAKEUP AIR UNIT	MAINTENANCE BUILDING	PAINT BOOTH	-	480	3	60	-	-	-	-	-	DIV.26	N/A	N/A	NORMAL	-	-	-	5HJ	19	EXISTING TO REMAIN

REGISTERED PROFESSIONAL ENGINEER
PAUL K. ERIKSON
No. 11219
exp.06/30/2025
ELECTRICAL
STATE OF CALIFORNIA

05-13-2024

IFB 4-2550 EXHIBIT B

Stantec
801 S. Figueroa Street, Suite 300
Los Angeles, CA 90017

Copyright Reserved
The contractor shall verify and be responsible for all dimensions. DO NOT scale the drawing - any errors or omissions shall be reported to Stantec without delay.
This drawing is the property of Stantec and shall not be reproduced in whole or in part. Reproduction or use for any purpose other than that authorized by Stantec is prohibited.

REVISION	DESCRIPTION	DATE
4	100% RESUBMITTAL	05/13/2024
3	100% CONSTRUCTION DRAWING SUBMITTAL	03/27/2024
2	90% UPDATED CONSTRUCTION SUBMITTAL	02/13/2024
1	90% CONSTRUCTION DRAWING SUBMITTAL	12/07/2023

REPLACEMENT OF MECHANICAL UNITS AT SANTA ANA BUS BASE
4301 W. MAC ARTHUR BLVD., SANTA ANA, CA

CONDUIT SCHEDULES

JOB #:	
DESIGN BY:	IZ
DRAWN BY:	AD
CHECKED BY:	PKE
DATE:	02/13/2024
SCALE:	
SHEET:	E-800F

OCTA
ORANGE COUNTY TRANSPORTATION AUTHORITY
550 SOUTH MAIN STREET, ORANGE, CA

Autodesk Docs://2014233703_Santa_Ana_Bus/elec_SantaAnaBus_2014233703.rvt

5/8/2024 9:59:52 AM

EQUIP TAG	DESCRIPTION	LOCATION	SERVICE	MOTOR POWER (OR) HP	ELECTRICAL DATA VOLTS	ø	HZ	FLA(A)	MCA(A)	MOCP(A)	DISCONNECT FRAME(A)	FUSE SIZE (A)	BY	STARTER TYPE	BY	EMERGENCY / NORMAL	CONDUIT REF #	CONDUIT	WIRE	PANEL	CIRCUIT	REMARK
EF 4-1	EXHAUST FAN	OPERATIONS BUILDING	OPER BLDG REST RM	1/4	120	1	60	2.9	4	15	-	-	DIV.26	N/A	N/A	NORMAL	-	3/4"	2#10 & 1#10G	4LC	2	MOTOR RATED SWITCH
EF 4-2	EXHAUST FAN	OPERATIONS BUILDING	OPER BLD MEN'S RM	1/4	120	1	60	3.5	4	15	-	-	DIV.26	N/A	N/A	NORMAL	-	3/4"	2#10 & 1#10G	4LC	4	MOTOR RATED SWITCH
EF 4-3	EXHAUST FAN	OPERATIONS BUILDING	OPER BLD ELEC RM 103	1/4	120	1	60	3.5	4	15	-	-	DIV.26	N/A	N/A	NORMAL	-	3/4"	2#10 & 1#10G	4LC	6	MOTOR RATED SWITCH
EF 4-4	EXHAUST FAN	OPERATIONS BUILDING	OPER BLDG LOCKER	1/10	120	1	60	1.5	2	15	-	-	DIV.26	N/A	N/A	NORMAL	-	3/4"	2#10 & 1#10G	4LC	8	MOTOR RATED SWITCH
EF 5-1	EXHAUST FAN	MAINTENANCE BUILDING	RUNNING REPAIR RM 181	25	480	3	60	34	42.5	70	100	70	DIV.26	2	DIV.23	NORMAL	141	1-1/4"	6#8 & 1#10G	MCC5A	2	POWER WIRING AND DISCONNECT BY EC
EF 5-2	EXHAUST FAN	MAINTENANCE BUILDING	RM 181	15	480	3	60	21	26.2	45	60	45	DIV.26	2	DIV.23	NORMAL	142	1"	6#10 & 1#10G	MCC5A	3	POWER WIRING AND DISCONNECT BY EC
EF 5-3	EXHAUST FAN	MAINTENANCE BUILDING	RM 178	15	480	3	60	21	26.2	45	60	45	DIV.26	2	DIV.23	NORMAL	143	1"	6#10 & 1#10G	MCC5A	4	POWER WIRING AND DISCONNECT BY EC
EF 5-4	EXHAUST FAN	MAINTENANCE BUILDING	RM 178	15	480	3	60	21	26.2	45	60	45	DIV.26	2	DIV.23	NORMAL	144	1"	6#10 & 1#10G	MCC5A	5	POWER WIRING AND DISCONNECT BY EC
EF 5-5	EXHAUST FAN	MAINTENANCE BUILDING	RM 178	15	480	3	60	21	26.2	45	60	45	DIV.26	2	DIV.23	NORMAL	145	1"	6#10 & 1#10G	MCC5A	6	POWER WIRING AND DISCONNECT BY EC
EF 5-6	EXHAUST FAN	MAINTENANCE BUILDING	STEAM CLEANER	5	480	3	60	7.6	9.5	15	30	15	DIV.26	1	DIV.23	NORMAL	146	3/4"	6#12 & 1#12G	MCC5A	7	POWER WIRING AND DISCONNECT BY EC
EF 5-7	EXHAUST FAN	MAINTENANCE BUILDING	PARTS RM 135	2	480	3	60	3.4	4.25	15	30	15	DIV.26	1	DIV.23	NORMAL	126	3/4"	3#12 & 1#12G	MCC5	26	POWER WIRING AND DISCONNECT BY EC
EF 5-8	EXHAUST FAN	MAINTENANCE BUILDING	PARTS RM 135	2	480	3	60	3.4	4.25	15	30	15	DIV.26	1	DIV.23	NORMAL	127	3/4"	3#12 & 1#12G	MCC5	27	POWER WIRING AND DISCONNECT BY EC
EF 5-9	EXHAUST FAN	MAINTENANCE BUILDING	PARTS RM 135	2	480	3	60	3.4	4.25	15	30	15	DIV.26	1	DIV.23	NORMAL	128	3/4"	3#12 & 1#12G	MCC5	28	POWER WIRING AND DISCONNECT BY EC
EF 5-10	EXHAUST FAN	MAINTENANCE BUILDING	PARTS RM 135	2	480	3	60	3.4	4.25	15	30	15	DIV.26	1	DIV.23	NORMAL	129	3/4"	3#12 & 1#12G	MCC5	29	POWER WIRING AND DISCONNECT BY EC
EF 5-11	EXHAUST FAN	MAINTENANCE BUILDING	JAN RM 219	1/15	120	1	60	1.3	2.00	15	-	-	DIV.26	N/A	N/A	NORMAL	-	3/4"	2#12 & 1#12G	5LP	32	MOTOR RATED SWITCH
EF 5-12 (E)	EXHAUST FAN	MAINTENANCE BUILDING	MEN'S RM 214, WOMEN 213	(E)	120	1	60	-	-	-	-	-	DIV.26	N/A	N/A	NORMAL	-	3/4"	2#12 & 1#12G	5LP	34	EXISTING TO REMAIN
EF 5-13	EXHAUST FAN	MAINTENANCE BUILDING	MEN'S RM 109	1/4	120	1	60	3.5	4	15	-	-	DIV.26	N/A	N/A	NORMAL	-	3/4"	2#12 & 1#12G	5LP	36	MOTOR RATED SWITCH
EF 5-14 (E)	EXHAUST FAN	MAINTENANCE BUILDING	WOMEN/SH RM 115	(E)	120	1	60	-	-	-	-	-	DIV.26	N/A	N/A	NORMAL	-	3/4"	2#12 & 1#12G	5LP	38	EXISTING TO REMAIN
EF 5-15 (E)	EXHAUST FAN	MAINTENANCE BUILDING	JAN RM 114	(E)	120	1	60	-	-	-	-	-	DIV.26	N/A	N/A	NORMAL	-	-	-	5LP	40	EXISTING TO REMAIN
EF 5-16	EXHAUST FAN	MAINTENANCE BUILDING	REBUILT RM 106	2	480	3	60	3.4	4.25	15	30	15	DIV.26	N/A	N/A	NORMAL	130	3/4"	3#12 & 1#12G	MCC5	30	POWER WIRING AND DISCONNECT BY EC
EF 5-17	EXHAUST FAN	MAINTENANCE BUILDING	REBUILT RM 107	2	480	3	60	3.4	4.25	15	30	15	DIV.26	1	DIV.23	NORMAL	131	3/4"	3#12 & 1#12G	MCC5	31	POWER WIRING AND DISCONNECT BY EC
EF 5-18	EXHAUST FAN	MAINTENANCE BUILDING	REBUILT RM 108	2	480	3	60	3.4	4.25	15	30	15	DIV.26	1	DIV.23	NORMAL	132	3/4"	3#12 & 1#12G	MCC5	32	POWER WIRING AND DISCONNECT BY EC
EF 5-19	EXHAUST FAN	MAINTENANCE BUILDING	BREAK RM 121	1 1/2	480	3	60	3	3.75	15	30	15	DIV.26	1	DIV.23	NORMAL	133	3/4"	3#12 & 1#12G	MCC5	33	POWER WIRING AND DISCONNECT BY EC
EF 5-20	EXHAUST FAN	MAINTENANCE BUILDING	CLEAN SHOP 141	1	480	3	60	2.1	2.63	15	30	15	DIV.26	1	DIV.23	NORMAL	134	3/4"	3#12 & 1#12G	MCC5	34	POWER WIRING AND DISCONNECT BY EC
EF 5-21	EXHAUST FAN	MAINTENANCE BUILDING	MACHINE RM 144	1	480	3	60	2.1	2.63	15	30	15	DIV.26	1	DIV.23	NORMAL	135	3/4"	3#12 & 1#12G	MCC5	35	POWER WIRING AND DISCONNECT BY EC
EF 5-22	EXHAUST FAN	MAINTENANCE BUILDING	MACHINE RM 145	1	480	3	60	2.1	2.63	15	30	15	DIV.26	1	DIV.23	NORMAL	136	3/4"	3#12 & 1#12G	MCC5	36	POWER WIRING AND DISCONNECT BY EC
EF 5-23 (E)	EXHAUST FAN	MAINTENANCE BUILDING	COMP REP RM 143	(E)	480	3	60	-	-	-	-	-	DIV.26	-	-	NORMAL	-	-	-	5LM	39	EXISTING TO REMAIN
EF 5-24	EXHAUST FAN	MAINTENANCE BUILDING	BLDG MAIN. RM 150	3/4	480	3	60	1.6	2	15	30	15	DIV.26	1	DIV.23	NORMAL	137	3/4"	3#12 & 1#12G	MCC5	37	POWER WIRING AND DISCONNECT BY EC
EF 5-25	EXHAUST FAN	MAINTENANCE BUILDING	COMP EXCH RM 148	7 1/2	480	3	60	11	13.8	20	30	20	DIV.26	1	DIV.23	NORMAL	147	3/4"	6#12 & 1#12G	MCC5A	8	POWER WIRING AND DISCONNECT BY EC
EF 5-26	EXHAUST FAN	MAINTENANCE BUILDING	REV. TOIL. RM 160/161	1/10	120	1	60	1.5	2	15	-	-	DIV.26	N/A	N/A	NORMAL	-	3/4"	2#12 & 1#12G	5LS	2	MOTOR RATED SWITCH
EF 5-27 (E)	EXHAUST FAN	MAINTENANCE BUILDING	LOCKER RM 167	(E)	120	1	60	-	-	-	-	-	DIV.26	-	-	NORMAL	-	-	-	5LS	4	EXISTING TO REMAIN
EF 5-28	EXHAUST FAN	MAINTENANCE BUILDING	BODY SHOP RM 174	20	480	3	60	27	33.8	60	60	50	DIV.26	2	DIV.23	NORMAL	148	1"	6#10 & 1#10G	MCC5A	9	POWER WIRING AND DISCONNECT BY EC
EF 5-29	EXHAUST FAN	MAINTENANCE BUILDING	STORAGE RM 155	3/4	480	3	60	1.6	2	15	30	15	DIV.26	1	DIV.23	NORMAL	138	3/4"	3#12 & 1#12G	MCC5	38	POWER WIRING AND DISCONNECT BY EC
EF 5-30 (E)	EXHAUST FAN	MAINTENANCE BUILDING	TEL RM 136	(E)	120	1	60	-	-	-	-	-	DIV.26	-	-	NORMAL	-	-	-	5LH	24	EXISTING TO REMAIN
EF 5-31	EXHAUST FAN	MAINTENANCE BUILDING	ELEC RM 137	2	480	3	60	3.2	4	15	30	15	DIV.26	N/A	N/A	NORMAL	-	3/4"	3#12 & 1#12G	5HE	20	POWER WIRING AND DISCONNECT BY EC
EF 5-32	EXHAUST FAN	MAINTENANCE BUILDING	LUBE RM 138	1/10	120	1	60	1.5	2	15	-	-	DIV.26	N/A	N/A	NORMAL	-	3/4"	2#10 & 1#10G	5LH	24	MOTOR RATED SWITCH
EF 5-33	EXHAUST FAN	MAINTENANCE BUILDING	C.A. RM 139	3	480	3	60	4.8	6	15	30	15	DIV.26	N/A	N/A	NORMAL	-	3/4"	3#12 & 1#12G	5HE	20	POWER WIRING AND DISCONNECT BY EC
EF 5-34	EXHAUST FAN	MAINTENANCE BUILDING	ELEC RM 185	2	480	3	60	3.2	4	15	30	15	DIV.26	N/A	N/A	NORMAL	-	3/4"	3#12 & 1#12G	5HA	28	POWER WIRING AND DISCONNECT BY EC
EF 5-35	EXHAUST FAN	MAINTENANCE BUILDING	ELEC RM 184	1/2	120	1	60	6.4	8	15	-	-	DIV.26	N/A	N/A	NORMAL	128	3/4"	3#12 & 1#12G	5LA	6	MOTOR RATED SWITCH
EF 5-36 (E)	EXHAUST FAN	MAINTENANCE BUILDING	ELEC RM 220	(E)	480	3	60	-	-	-	-	-	DIV.26	-	-	NORMAL	-	-	-	MCC5	10	EXISTING TO REMAIN
EF 5-37	EXHAUST FAN	MAINTENANCE BUILDING	ENG. DYN. RM 103	7 1/2	480	3	60	11	13.8	20	30	20	DIV.26	1	DIV.23	NORMAL	-	3/4"	3#12 & 1#12G	MCC5A	11	POWER WIRING AND DISCONNECT BY EC
EF 5-38	EXHAUST FAN	MAINTENANCE BUILDING	TRAN DYN. RM 105	1/4	120	1	60	3.5	4	15	-	-	DIV.26	N/A	N/A	NORMAL	-	3/4"	2#12 & 1#12G	5LN	10	MOTOR RATED SWITCH
EF 5-39	EXHAUST FAN	MAINTENANCE BUILDING	EQUIP. STOR. RM 129	1/6	120	1	60	2.3	3	15	-	-	DIV.26	N/A	N/A	NORMAL	-	3/4"	2#12 & 1#12G	5LD	6	MOTOR RATED SWITCH
EF 5-40	EXHAUST FAN	MAINTENANCE BUILDING	LOADING ABY RM 170	1/4	120	1	60	3.5	4	15	-	-	DIV.26	N/A	N/A	NORMAL	-	3/4"	2#12 & 1#12G	5LK	3	MOTOR RATED SWITCH
EF 5-41	EXHAUST FAN	MAINTENANCE BUILDING	UPHOLSTERY SHOP RM...	1/4	120	1	60	3.5	4	15	-	-	DIV.26	N/A	N/A	NORMAL	-	3/4"	2#12 & 1#12G	5LS	6	MOTOR RATED SWITCH
EF 5-42	EXHAUST FAN	MAINTENANCE BUILDING	FUEL RM 102	1/4	120	1	60		7.25	15	-	-	DIV.26	N/A	N/A	NORMAL	-	3/4"	2#12 & 1#12G	5LT	13	MOTOR RATED SWITCH
EF 5-43 (E)	EXHAUST FAN	MAINTENANCE BUILDING	PAINT BOOTH	(E)	-	-	-	-	-	-	-	-	DIV.26	-	-	NORMAL	-	-	-	5HJ	19	EXISTING TO REMAIN
EF 6-1	EXHAUST FAN	FUEL/BRAKE/TIRE REPAIR...	BRAKE/BST RM 114/001	20	480	3	60	27	33.8	50	60	50	DIV.26	2	DIV.23	NORMAL	171	1"	6#10 & 1#10G	MCC6	2	POWER WIRING AND DISCONNECT BY EC
EF 6-2	EXHAUST FAN	FUEL/BRAKE/TIRE REPAIR...	FUEL AREA RM 115	15	480	3	60	21	26.2	40	60	40	DIV.26	2	DIV.23	NORMAL	172	1"	6#10 & 1#10G	MCC6	3	POWER WIRING AND DISCONNECT BY EC
EF 6-3	EXHAUST FAN	FUEL/BRAKE/TIRE REPAIR...	BODY/SHOP 118/116	10	480	3	60	14	17.5	30	30	30	DIV.26	1	DIV.23	NORMAL	173	3/4"	6#12 & 1#12G	MCC6	4	POWER WIRING AND DISCONNECT BY EC
EF 6-4	EXHAUST FAN	FUEL/BRAKE/TIRE REPAIR...	MEN'S RM	1/15	120	1	60	1.3	2	15	-	-	DIV.26	N/A	N/A	NORMAL	-	3/4"	2#12 & 1#12G	6LB	1	MOTOR RATED SWITCH
EF 6-5 (E)	EXHAUST FAN	FUEL/BRAKE/TIRE REPAIR...	WOMEN'S RM	(E)	120	1	60	-	-	-	-	-	DIV.26	-	-	NORMAL	-	-	-	6LB	3	EXISTING TO REMAIN
EF 6-6	EXHAUST FAN	FUEL/BRAKE/TIRE REPAIR...	LOCKER/LAUNDRY	1/10	120	1	60	1.5	2	15	-	-	DIV.26	N/A	N/A	NORMAL	-	3/4"	2#12 & 1#12G	6LB	5	MOTOR RATED SWITCH
EF 6-7	EXHAUST FAN	FUEL/BRAKE/TIRE REPAIR...	C.A. 111/TEL. 112	3	480	3	60	4.8	6	15	30	15	DIV.26	N/A	N/A	NORMAL	-	3/4"	3#12 & 1#12G	MCC5	9	POWER WIRING AND DISCONNECT BY EC
EF 6-8	EXHAUST FAN	FUEL/BRAKE/TIRE REPAIR BUILDING	FLUID TANK 110/GREESE TANK 109	1/10	120	1	60	1.5	2	15	-	-	DIV.26	N/A	N/A	NORMAL	-	3/4"	2#12 & 1#12G	6LB	9	MOTOR RATED SWITCH
EF 6-9	EXHAUST FAN	FUEL/BRAKE/TIRE REPAIR...	FUEL RM 115	1/2	120	1	60	6.4	8	15	-	-	DIV.26	N/A	N/A	NORMAL	-	3/4"	2#12 & 1#12G	6LB	42	MOTOR RATED SWITCH
EF 7-1	EXHAUST FAN	BUS WASH/BRAKE DYNO BUILDING	BUS WASH	2	480	3	60	3.4	4.25	15	30	15	DIV.26	N/A	N/A	NORMAL	174	3/4"	3#12 & 1#12G	MCC6	5	POWER WIRING AND DISCONNECT BY EC
EF 7-2	EXHAUST FAN	BUS WASH/BRAKE DYNO BUILDING	BUS WASH	2	480	3	60	3.4	4.25	15	30	15	DIV.26	N/A	N/A	NORMAL	174	3/4"	3#12 & 1#12G	MCC6	5	POWER WIRING AND DISCONNECT BY EC
EF 8-1	EXHAUST FAN	DETAIL/CLEANING BUILDING	DETAILING/CLEANIN EQUIP. RM	1/4	120	1	60	2.9	4	15	-	-	DIV.26	N/A	N/A	NORMAL	-	3/4"	2#12 & 1#12G	8LA	24	MOTOR RATED SWITCH

IFB 4-2550 EXHIBIT B

Stantec
801 S. Figueroa Street, Suite 300
Los Angeles, CA 90017

Copyright Reserved
The contractor shall verify and be responsible for all dimensions. DO NOT scale the drawing - any errors or omissions shall be reported to Stantec without delay.
The copyrights to all designs and drawings are the property of Stantec. Reproduction or use for any purpose other than that authorized by Stantec is prohibited.

REVISION	DESCRIPTION	DATE
4	100% RESUBMITTAL	05/13/2024
3	100% CONSTRUCTION DRAWING SUBMITTAL	03/27/2024
2	90% UPDATED CONSTRUCTION SUBMITTAL	02/13/2024
1	90% CONSTRUCTION DRAWING SUBMITTAL	12/07/2023

REGISTERED PROFESSIONAL ENGINEER
PAUL K. ERICSSON
No. 11219
exp.06/30/2025
ELECTRICAL
STATE OF CALIFORNIA

05-13-2024

REPLACEMENT OF MECHANICAL UNITS AT SANTA ANA BUS BASE
4301 W. MAC ARTHUR BLVD., SANTA ANA, CA

CONDUIT SCHEDULES

JOB #:
DESIGN BY: IZ
DRAWN BY: ERL
CHECKED BY: PKE
DATE: 02/13/2024
SCALE:
SHEET: **E-801F**

OCTA
ORANGE COUNTY TRANSPORTATION AUTHORITY
550 SOUTH MAIN STREET, ORANGE, CA

Autodesk Docs://2014233703_Santa_Ana_Bus/elec_SantaAnaBus_2014233703.rvt
5/8/2024 9:59:53 AM

EQUIP TAG	DESCRIPTION	LOCATION	SERVICE	MOTOR POWER (OR) HP	ELECTRICAL DATA						DISCONNECT			STARTER		EMERGENCY / NORMAL	CONDUIT REF #	CONDUIT	WIRE	PANEL	CIRCUIT	REMARK
					VOLTS	ø	HZ	FLA(A)	MCA(A)	MOCP(A)	FRAME(A)	FUSE SIZE (A)	BY	TYPE	BY							
SF 4-1	SUPPLY FAN	OPERATIONS BUILDING	ELEC RM 103	1/4	120	1	60	5.8	7.25	20	-	-	DIV.26	1	DIV.23	NORMAL	-	3/4"	2#12 & 1#12G	4LC	38	MOTOR RATED SWITCH
SF 5-1	SUPPLY FAN	MAINTENANCE BUILDING	PARTS RM 135	3	480	3	60	4.8	6	15	30	15	DIV.26	1	DIV.23	NORMAL	116	3/4"	3#12 & 1#12G	MCC5	16	POWER WIRING AND DISCONNECT BY EC
SF 5-2	SUPPLY FAN	MAINTENANCE BUILDING	PARTS RM 135	3	480	3	60	4.8	6	15	30	15	DIV.26	1	DIV.23	NORMAL	117	3/4"	3#12 & 1#12G	MCC5	17	POWER WIRING AND DISCONNECT BY EC
SF 5-3	SUPPLY FAN	MAINTENANCE BUILDING	PARTS RM 135	3	480	3	60	4.8	6	15	30	15	DIV.26	1	DIV.23	NORMAL	118	3/4"	3#12 & 1#12G	MCC5	18	POWER WIRING AND DISCONNECT BY EC
SF 5-4	SUPPLY FAN	MAINTENANCE BUILDING	REBUILT RM 106	5	480	3	60	7.6	9.5	15	30	15	DIV.26	1	DIV.23	NORMAL	119	3/4"	3#12 & 1#12G	MCC5	19	POWER WIRING AND DISCONNECT BY EC
SF 5-5	SUPPLY FAN	MAINTENANCE BUILDING	BRAKE RM 121	1.5	480	3	60	3	3.75	15	30	15	DIV.26	1	DIV.23	NORMAL	120	3/4"	3#12 & 1#12G	MCC5	20	POWER WIRING AND DISCONNECT BY EC
SF 5-6	SUPPLY FAN	MAINTENANCE BUILDING	CLEAN SHOP RM 141	1	480	3	60	2.1	2.63	15	30	15	DIV.26	1	DIV.23	NORMAL	121	3/4"	3#12 & 1#12G	MCC5	21	POWER WIRING AND DISCONNECT BY EC
SF 5-7 (E)	SUPPLY FAN	MAINTENANCE BUILDING	MECH SHOP RM 144	(E)	480	3	60	-	-	-	-	-	DIV.26	-	-	NORMAL	122	3/4"	3#12 & 1#12G	MCC5	22	EXISTING TO REMAIN
SF 5-8	SUPPLY FAN	MAINTENANCE BUILDING	COMP. SHOP.RM143	3/4	480	3	60	1.6	2	15	30	15	DIV.26	1	DIV.23	NORMAL	123	3/4"	3#12 & 1#12G	MCC5	23	POWER WIRING AND DISCONNECT BY EC
SF 5-9	SUPPLY FAN	MAINTENANCE BUILDING	BLD MAINT.RM 150	2	480	3	60	3.4	4.25	15	30	15	DIV.26	1	DIV.23	NORMAL	124	3/4"	3#12 & 1#12G	MCC5	24	POWER WIRING AND DISCONNECT BY EC
SF 5-10	SUPPLY FAN	MAINTENANCE BUILDING	STORAGE RM 155	1	480	3	60	2.1	2.63	15	30	15	DIV.26	1	DIV.23	NORMAL	125	3/4"	3#12 & 1#12G	MCC5	25	POWER WIRING AND DISCONNECT BY EC
SF 5-11 (E)	SUPPLY FAN	MAINTENANCE BUILDING	ELEC RM 137	(E)	480	3	60	-	-	-	-	-	DIV.26	-	-	NORMAL	-	-	-	5HE	20	EXISTING TO REMAIN
SF 5-12	SUPPLY FAN	MAINTENANCE BUILDING	ELEC RM 185	1/2	480	3	60	1.1	1.38	15	30	15	DIV.26	1	DIV.23	NORMAL	-	3/4"	3#12 & 1#12G	5HA	28	POWER WIRING AND DISCONNECT BY EC
SF 5-13	SUPPLY FAN	MAINTENANCE BUILDING	ELEC RM 184	1/2	480	3	60	1.1	1.38	15	30	15	DIV.26	1	DIV.23	NORMAL	-	3/4"	3#12 & 1#12G	5HA	28	POWER WIRING AND DISCONNECT BY EC
SF 5-14	SUPPLY FAN	MAINTENANCE BUILDING	ELEC RM 220	1 1/2	480	3	60	3	3.75	15	30	15	DIV.26	1	DIV.23	NORMAL	-	3/4"	3#12 & 1#12G	MCC5	11	POWER WIRING AND DISCONNECT BY EC
SF 5-15	SUPPLY FAN	MAINTENANCE BUILDING	TRAIN DYN. RM105	1/2	480	3	60	1.1	1.38	15	30	15	DIV.26	1	DIV.23	NORMAL	-	3/4"	3#12 & 1#12G	MCC5	8	POWER WIRING AND DISCONNECT BY EC
SF 5-16	SUPPLY FAN	MAINTENANCE BUILDING	LOADING ABY RM 170	1/2	480	3	60	1.1	1.38	15	30	15	DIV.26	1	DIV.23	NORMAL	-	3/4"	3#12 & 1#12G	MCC5	7	POWER WIRING AND DISCONNECT BY EC
SF 6-1	SUPPLY FAN	FUEL/BRAKE/TIRE REPAIR...	TIRE BAY RM 116	5	480	3	60	7.6	9.5	15	30	15	DIV.26	1	DIV.23	NORMAL	170	3/4"	3#12 & 1#12G	MCC6	6	POWER WIRING AND DISCONNECT BY EC
SF 6-2	SUPPLY FAN	FUEL/BRAKE/TIRE REPAIR...	BASEMENT 001	5	480	3	60	3.4	4.25	15	30	15	DIV.26	1	DIV.23	NORMAL	169	3/4"	3#12 & 1#12G	MCC6	7	POWER WIRING AND DISCONNECT BY EC

REGISTERED PROFESSIONAL ENGINEER
PAUL K. ERICSON
No. 11219
exp.06/30/2025
ELECTRICAL
STATE OF CALIFORNIA

05-13-2024

IFB 4-2550 EXHIBIT B

Stantec
801 S. Figueroa Street, Suite 300
Los Angeles, CA 90017

Copyright Reserved
The contractor shall verify and be responsible for all dimensions. DO NOT scale the drawing - any errors or omissions shall be reported to Stantec without delay.
This drawing is the property of Stantec and shall not be reproduced in whole or in part. Reproduction or use for any purpose other than that authorized by Stantec is prohibited.

REVISION	DESCRIPTION	DATE
4	100% RESUBMITTAL	05/13/2024
3	100% CONSTRUCTION DRAWING SUBMITTAL	03/27/2024
2	90% UPDATED CONSTRUCTION SUBMITTAL	02/13/2024
1	90% CONSTRUCTION DRAWING SUBMITTAL	12/07/2023

REPLACEMENT OF MECHANICAL UNITS AT SANTA ANA BUS BASE
4301 W. MAC ARTHUR BLVD., SANTA ANA, CA

CONDUIT SCHEDULES

JOB #:
DESIGN BY: IZ
DRAWN BY: AD
CHECKED BY: PKE
DATE: 02/13/2024
SCALE:
SHEET: **E-802F**

OCTA
ORANGE COUNTY TRANSPORTATION AUTHORITY
550 SOUTH MAIN STREET, ORANGE, CA

Autodesk Docs://2014233703_Santa_Ana_Bus/elec_SantaAnaBus_2014233703.rvt
5/8/2024 9:59:53 AM

ORANGE COUNTY TRANSPORTATION AUTHORITY
REPLACEMENT OF MECHANICAL UNITS AT SANTA ANA BUS BASE - BUS WASH/ BRAKE DYNO BUILDING

4301 W MacArthur Blvd, Santa Ana, CA 92704
CONTRACT NO. C-4-2550

SHEET INDEX

GENERAL
G-000W COVERSHEET
G-100W OVERALL SITE PLAN

MECHANICAL DEMO
MD-230W BUS WASH/BRAKE DYNO BUILDING MECHANICAL DEMO ROOF PLAN

ELECTRICAL DEMO
ED-240W BUS WASH/BRAKE DYNO BUILDING ELETRICAL DEMO ROOF PLAN

STRUCTURAL
S-100W GENERAL NOTES
S-200W OVERALL PLAN
S-303W BUS WASH/BRAKE DYNO BUILDING STRUCTURAL ROOF PLAN
S-600W ANCHORAGE SCHEDULES

ARCHITECTURAL
A-100W ARCHITECTURAL SITE PLAN
A-500W DETAILS

MECHANICAL
M-001W MECHANICAL GENERAL NOTES, SYMBOLS AND ANNOTATIONS
M-002W PROJECT NOTES AND SHEET INDEX
M-003W FAN SCHEDULE
M-004W ROOFTOP AND MAKE UP AIR SCHEDULES
M-005W HEAT PUMP AND AIR CONDITIONER SCHEDULES
M-006W MECHANICAL DETAILS
M-007W MECHANICAL DETAILS
M-008W MECHANICAL CONTROLS
M-009W MECHANICAL CONTROLS
M-230W BUS WASH/BRAKE DYNO BUILDING MECHANICAL ROOF PLAN
M-300W TITLE 24 CODE COMPLIANCE
M-301W TITLE 24 CODE COMPLIANCE

ELECTRICAL
E-001W SYMBOLS, NOTES AND ANNOTATIONS
E-002W SCHEMATIC SYMBOLS AND ELECTRICAL DRAWING INDEX
E-240W BUS WASH-BRAKE DYNO BUILDING ELECTRICAL ROOF PLAN
E-500W ELECTRICAL DETAILS
E-600W ELECTRICAL SINGLE LINE DIAGRAM
E-601W ELECTRICAL SINGLE LINE DIAGRAM
E-700W PANEL SCHEDULES
E-701W PANEL SCHEDULES
E-702W PANEL SCHEDULES
E-703W PANEL SCHEDULES
E-704W PANEL SCHEDULES
E-800W CONDUIT SCHEDULES
E-801W CONDUIT SCHEDULES
E-802W CONDUIT SCHEDULES

GENERAL INFORMATION

APPLICABLE CODES:
2022 CALIFORNIA MECHANICAL CODE
2022 CALIFORNIA PLUMBING CODE
2022 NATIONAL ELECTRICAL CODE
2022 TITLE 24 REQUIREMENTS
CALGREEN STANDARDS

ABBREVIATIONS

(E)	EXISTING
AB	ANCHOR BOLT
AC	AIR CONDITIONING
ACT	ACOUSTICAL TILE
ADJ	ADJACENT/ADJUSTABLE
AFF	ABOVE FINISH FLOOR
AFG	ABOVE FINISH GRADE
AHU	AIR HANDLING UNIT
ALT	ALTERNATE NO.
ALUM	ALUMINUM
ANOD	ANODIZED
ANSI	AMERICAN NATIONAL STANDARDS INSTITUTE
APPD	APPROVED
APPROX	APPROXIMATELY
ARCH	ARCHITECT
AVG	AVERAGE
BD	BOARD
BLDG	BUILDING
BLKG	BLOCKING
BM	BEAM/BENCH MARK
BOS	BOTTOM OF STEEL
BOT	BOTTOM
BUR	BUILT UP ROOFING
CEM	CEMENT
CF	CUBIC FOOT / FEET
CF/CI	CONTRACTOR FURNISHED/CONTRACTOR INSTALLED
CF/OI	CONTRACTOR FURNISHED/OWNER INSTALLED
CIP	CAST IN PLACE
CJ	CONTROL JOINT / CONTRACTION JOINT
CL	CENTERLINE
CLG	CEILING
CLR	CLEAR
CMU	CONCRETE MASONRY UNIT
CO	CLEAN OUT
COL	COLUMN
CONC	CONCRETE
COND	CONDITION
CONST	CONSTRUCTION
CONT	CONTINUE / CONTINUATION / CONTINUOUS
COORD	COORDINATE
CPT	CARPET
CT	CERAMIC TILE
CTR	CENTER
CU FT	CUBIC FOOT / CUBIC FEET
CU YD	CUBIC YARDS
CW	COLD WATER
D	DEPTH / DEEP
DBL	DOUBLE
DEG	DEGREE
DEL	DELETE
DEMO	DEMOLITION
DIA	DIAMETER
DIAG	DIAGONAL
DIM	DIMENSION
DISP	DISPENSER
DN	DOWN
DR	DOOR / DRAIN
DTL	DETAIL
DWG	DRAWING
E	EAST
EA	EACH
EF	EXHAUST FAN
EJ	EXPANSION JOINT
EL	REFERENCE ELEVATION / EASEMENT LINE
ELEC	ELECTRIC / ELECTRICAL
ELEV	ELEVATOR / ELEVATION
EMER	EMERGENCY
ENGR	ENGINEER / ENGINEERING
EOS	EDGE OF SLAB
EPDM	ETHYLENE PROPYLENE DIENE MONOMOR
EQ	EQUAL
EQUIP	EQUIPMENT
EST	ESTIMATE
ETC	ET CETERA
EW	EACH WAY
EXP	EXPOSED / EXPAND / EXPANSION
FA	FIRE ALARM / FACE AREA / FRESH AREA
FACP	FIRE ALARM CONTROL PANEL
FD	FLOOR DRAIN
FDTN	FOUNDATION
FE	FIRE EXTINGUISHER
FEC	FIRE EXTINGUISHER CABINET
FH	FIRE HYDRANT / FIRE HOSE
FHC	FIRE HOSE CABINET
FIN	FINISH
FIXT	FIXTURE
FL	FLOW LINE / FLOOR LINE
FLR	FLOOR / FLOORING
FR	FRAME / FIRE RATED / FIRE RETARTANT
FT	FOOT / FEET / FIRE TREATED / FULLY TEMPERED

ABBREVIATIONS

FTG	FOOTING
FURN	FURNISH / FURNITURE
GA	GAGE
GAL	GALLONS
GALV	GALVANIZED
GC	GENERAL CONTRACTOR
GEN	GENERAL / GENERATOR
GL	GLASS / GROUND LEVEL
GLZ	GLAZING
GND	GROUND
GYP BD	GYPSUM BOARD
HC	HANDICAPPED ACCESSIBLE / HOLLOW CORE
HD	HEAD / HEAVY DUTY
HDW	HARDWARE
HM	HOLLOW METAL
HORIZ	HORIZONTAL
HT	HEIGHT
HVAC	HEATING VENTILATION AND AIR CONDITIONING
HW	HOT WATER
ID	INSIDE DIAMETER / INTERIOR DESIGN
IF	INSIDE FACE / INTAKE FAN
IN	INCHES
INCL	INCLUDING
INSTL	INSTALL
INSUL	INSULATE / INSULATION
INT	INTERIOR / INTERNAL
INV	INVERT
INV EL	INVERT ELEVATION
J BOX	JUNCTION BOX
JT	JOINT
LAM	LAMINATE
LAV	LAVATORY
LBS	POUNDS
LF	LINEAR FEET
LH	LEFT HAND
LTG	LIGHTING
MAINT	MAINTENANCE
MATL	MATERIAL
MAX	MAXIMUM
MECH	MECHANICAL
MED	MEDIUM
MEMB	MEMBRANE
MFG	MANUFACTURING
MFR	MANUFACTURER
MIN	MINIMUM
MISC	MISCELLANEOUS
MTL	METAL
N	NORTH
N/A	NOT APPLICABLE
NEG	NEGATIVE
NIC	NOT IN CONTRACT
NO	NUMBER
NOM	NOMINAL
NTS	NOT TO SCALE
OC	ON CENTER
OD	OUTSIDE DIAMETER / OUTSIDE DIMENSION
OF/CI	OWNER FURNISHED/CONTRACTOR INSTALLED
OF/OI	OWNER FURNISHED/OWNER INSTALLED
OH	OPPOSITE HAND / OVERHEAD / OVERHANG
OPP	OPPOSITE
ORIG	ORIGINAL
PAT	PATTERN
PCC	PRECAST CONCRETE
PERF	PERFORATED
PERM	PERMANENT
PL	PLATE / PROPERTY LINE
PLAM	PLASTIC LAMINATE
PLAS	PLASTER / PLASTIC
PLBG	PLUMBING
PLYWD	PLYWOOD
PNL	PANEL
PREFAB	PREFABRICATED
PREFIN	PREFINISHED
PRELIM	PRELIMINARY
PREP	PREPARATION
PROJ	PROJECT
PT	PAINT / PRESSURE TREATED
PVC	POLYVINYL CHLORIDE
QTY	QUANTITY
R	RADIUS / RISER
RA	RETURN AIR
RCP	REFLECTED CEILING PLAN
RD	ROOF DRAIN
REBAR	REINFORCED STEEL BAR
REF	REFERENCE / REFRIGERATOR
REINF	REINFORCED / REINFORCEMENT
REQD	REQUIRED
REV	REVISION
RH	RIGHT HAND
RM	ROOM

ABBREVIATIONS

RO	ROUGH OPENING
ROW	RIGHT OF WAY
RTU	ROOF TOP UNIT
S	SOUTH
SALV	SALVAGE
SAN	SANITARY
SCHED	SCHEDULE / SCHEDULED
SEC	SECOND
SECT	SECTION
SF	SQUARE FOOT / SQUARE FEET / SUPPLY FAN
SGL	SINGLE
SIM	SIMILAR
SM	SHEET METAL / SMALL / SURFACE MOUNTED
SPEC	SPECIFICATION(S)
SPLY	SUPPLY
SQ	SQUARE
SST	STAINLESS STEEL
STC	SOUND TRANSMISSION CLASS
STD	STANDARD
STL	STEEL
STL JST	STEEL JOIST
STOR	STORAGE
STRUCT	STRUCTURAL
SURF	SURFACE
SUSP	SUSPENDED
SYMM	SYMMETRICAL
T	TREAD
T&B	TOP AND BOTTOM
TBD	TO BE DETERMINED
TEL	TELEPHONE
TEMP	TEMPERATURE / TEMPORARY
THK	THICK / THICKNESS
THRES	THRESHOLD
THRU	THROUGH
TO	TOP OF ____
TOC	TOP OF CONCRETE / TOP OF CURB
TOJ	TOP OF JOIST
TOM	TOP OF MASONRY
TOP	TOP OF PARAPET / TOP OF PAVEMENT
TOS	TOP OF STEEL / TOP OF SLAB
TOW	TOP OF WALL
TS	TUBE STEEL
TYP	TYPICAL
UBC	UNIFORM BUILDING CODE
UC	UNDERCUT
UL	UNDERWRITER'S LABORATORIES
UNFIN	UNFINISHED
UNO	UNLESS NOTED OTHERWISE
UTIL	UTILITY
VAR	VARIES
VCT	VINYL COMPOSITION TILE
VERT	VERTICAL
VIF	VERIFY IN FIELD
W	WEST / WIDTH / WIDE
W/	WITH
W/O	WITHOUT
WC	WATER CLOSET / WALL COVERING
WD	WOOD / WOOD DOOR
WF	WIDE FLANGE
WT	WEIGHT
YD	YARD / YARDS

PROJECT LOCATION

VICINITY MAP

GENERAL NOTES

1 DO NOT SCALE DRAWINGS.
2 ITEMS INDICATED ON THESE DRAWINGS ARE NEW, UNLESS NOTED OTHERWISE.
3 CONTRACTOR TO PROVIDE ROOFTOP SUPPORT SYSTEMS PER SPECIFICATIONS FOR ALL PIPING, CONDUITS, AND ALL OTHER ITEMS NOT OTHERWISE DIRECTLY OR INDIRECTLY ATTACHED TO THE BUILDINGS, PROVIDE SYSTEMS AS REQUIRED TO ACCOMMODATE EXISTING PIPING, CONDUITS, ETC. AND ANY NEW PIPING, CONDUITS, ETC.
4 CONTRACTOR TO PROTECT IN PLACE ALL PORTIONS OF THE BUILDINGS NOT IN SCOPE OR NOT INTENDED TO BE DEMOLISHED OR OTHERWISE PATCHED AND REPAIRED.
5 THE FOLLOWING GENERAL NOTES APPLY TO THE ENTIRE SET OF DRAWINGS AND ARE NOT SPECIFIC TO ANY ONE DISCIPLINE
6 IT IS THE CONTRACTORS RESPONSIBILITY TO REVIEW AND COORDINATE THE WORK OF ALL SUB-CONTRACTORS, TRADES AND SUPPLIERS WITH REQUIREMENTS OF THE CONTRACT BEFORE COMMENCING CONSTRUCTION, AND ASSURE THAT ALL PARTIES ARE AWARE OF ALL REQUIREMENTS, REGARDLESS OF WHERE THE REQUIREMENTS OCCUR IN THE CONTRACT DOCUMENTS, WHICH MIGHT AFFECT THE WORK OF THAT PARTY.
7 THE WORK DESCRIBED BY THE DRAWINGS OF ANY ONE DISCIPLINE MAY BE AFFECTED BY THE WORK DESCRIBED ON DRAWINGS OF ANOTHER DISCIPLINE AND MAY REQUIRE CROSS REFERENCE. PARTIAL SETS OF DRAWINGS ARE INCOMPLETE AND SHOULD NOT BE DISTRIBUTED OR UTILIZED BY THE CONTRACTOR.
8 THE DRAWINGS AND SPECIFICATIONS ESTABLISH MINIMUM REQUIREMENTS FOR THE DESIGN AND CONSTRUCTION OF THE PROJECT.
9 ARCHITECT IS NOT RESPONSIBLE FOR ACCURACY OF EXISTING CONDITIONS SHOWN IN THESE DOCUMENTS. GC SHALL CONTACT ARCHITECT IMMEDIATELY IF ANY DISCREPANCIES OCCUR IN THE FIELD.
10 THE DRAWINGS IN THIS SET ARE DIAGRAMMATIC AND ILLUSTRATE THE INTENT OF THE DESIGN.
11 THE CONTRACTOR SHALL IDENTIFY AND NOTIFY IN WRITING TO THE ARCHITECT CONFLICTS BETWEEN THE WORK OF DIFFERENT PARTIES, AND DISCREPANCIES BETWEEN THE DOCUMENTS AND THE ACTUAL CONDITIONS AT THE EARLIEST POSSIBLE DATE SO AS TO ALLOW REASONABLE AND ADEQUATE TIME FOR THE CONFLICT TO BE RESOLVED WITHOUT DELAYING THE WORK. ALL DEVIATIONS FROM THAT WHICH IS REQUIRED BY THE CONTRACT DOCUMENTS MUST BE APPROVED IN ADVANCE BY THE ARCHITECT AND OWNER PRIOR TO PROCEEDING.
12 THE GENERAL NOTES, SYMBOLS AND DEFINITIONS APPLICABLE TO EACH DISCIPLINE CAN BE FOUND AT THE FRONT OF EACH DISCIPLINE'S SET OF DRAWINGS AND IS LISTED AS PART OF THE OVERALL PROJECT INDEX OF DRAWINGS.
13 THE CONTRACTOR IS RESPONSIBLE TO COMPLY WITH ALL APPLICABLE LAWS, CODES, REGULATIONS AND ORDINANCES OF THE PLACE (CITY, COUNTY, DISTRICT, AND STATE) WHERE THE PROJECT IS LOCATED.
14 THE CONTRACTOR SHALL OBTAIN ALL REQUIRED PERMITS (IF REQUIRED) AND SIMILAR RELEASES REQUIRED FOR THE CONSTRUCTION AND OCCUPANCY OF THE PROJECT. THE CONTRACTOR SHALL FURNISH COPIES OF ALL SUCH ITEMS TO THE OWNER AND ARCHITECT WITHIN 10 DAYS OF RECEIPT OF SUCH ITEMS. IF PERMITS ARE ISSUED SUBJECT TO CERTAIN CONDITIONS OR REVISIONS TO THE WORK OR IF PERMITS ARE DELAYED FOR ANY REASON, THE CONTRACTOR SHALL IMMEDIATELY NOTIFY THE OWNER AND ARCHITECT.
15 THE CONTRACTOR SHALL BE SOLELY RESPONSIBLE FOR MEANS, METHODS AND SEQUENCES OF CONSTRUCTION.
16 THE CONTRACTOR SHALL PROMPTLY REMOVE AND PROPERLY DISPOSE OF ALL CONSTRUCTION AND DEMOLITION DEBRIS. THE CONTRACTOR SHALL OBTAIN APPROVAL OF OWNER FOR DETAILS RELATED TO ALL SITE ACCESS AND REMOVAL PLANS
17 CONTRACTOR NOT TO STORE NEW OR REMOVED MECHANICAL UNITS ON BUILDING ROOFTOPS
18 THE CONTRACTOR SHALL BECOME FAMILIAR WITH AND COMPLY WITH OWNER'S PROCEDURES FOR MAINTAINING A SECURE SITE AND BUILDING AS NOTED IN THE OCTA DIVISION 1 SPECIFICATIONS.
19 EACH INSTALLER SHALL EXAMINE THE SUBSTRATE CONDITION AND/OR SITE CONDITIONS WHICH AFFECT THE QUALITY OF EACH PRODUCT TO BE INSTALLED. IF ANY CONDITIONS EXIST WHICH WILL HAVE A DETRIMENTAL EFFECT ON THE QUALITY OF THE INSTALLATION, THE INSTALLER SHALL IMMEDIATELY ADVISE THE CONTRACTOR. INSTALLATION SHALL NOT PROCEED UNTIL THE UNSATISFACTORY CONDITIONS ARE CORRECTED. INSTALLATION OF PRODUCTS SHALL SIGNIFY ACCEPTANCE BY THE INSTALLER OF THE SUBSTRATE CONDITIONS.
20 THE CONTRACTOR SHALL MAINTAIN A CURRENT/UPDATED RECORD OF DRAWINGS ON SITE AT ALL TIMES.
21 CONTRACTOR SHALL PROVIDE TEMPORARY HVAC UNITS WHILE THE PERMANENT MECHANICAL SYSTEMS ARE BEING REPLACED.
22 GC NOT TO PLACE CRANE OVER UNDERGROUND STORAGE TANKS.
23 CONTRACTOR TO COORDINATE WITH OCTA FACILITIES MAINTENANCE, SUBMITTING A LAYDOWN PLAN WITH CRANE LOCATIONS PER THE HSE SPECIFICATION DOCUMENTS. CONTRACTOR TO SUBMIT A CRANE PLAN FOR OCTA HSE DEPARTMENT TO REVIEW AND CERTIFY.
24 PATCH AND REPAIR EXISTING BUILT UP ROOFING SYSTEM AS NEEDED PER MFR REQUIREMENTS WITH A MINIMUM OVERLAP OF 48". SEE ALSO SPEC 07 52 16.
25 CONSTRUCTION SEQUENCE: THE WORK SHALL BE PERFORMED IN TWO PHASES, THE DEMOLITION PHASE, AND THE NEW CONSTRUCTION PHASE. ALL CRANE WORK FOR THE DEMOLITION PHASE INCLUDING REMOVAL OF EXISTING HVAC UNITS SHALL BE COMPLETED ON A NORMAL WORKDAY BETWEEN 7:00AM AND 4:00PM. ALL CRANE WORK FOR THE NEW CONSTRUCTION PHASE INCUDING SETTING THE NEW HVAC SHALL BE COMPLETED ON A SUBSEQUENT NORMAL WORK DAY BETWEEN 7:00AM AND 4:00PM.
26 ALL REMOVED DEMOLISHED EQUIPMENT SHALL BE LEGALLY DISPOSED OFF THE SITE THE SAME DAY OF REMOVAL AT CONTRACTOR'S EXPENSE.
27 CONTRACTOR TO PROVIDE TEMPORARY HVAC UNITS FOR BUILDINGS WHILE THE PERMENANT HVAC FOR THAT BUILDING IS BEING WORKED ON

LICENSED ARCHITECT PATRICK MARTIN WICKELEY No. C21617 REN. 5/31/2025 STATE OF CALIFORNIA

GRAPHIC SYMBOLS LEGEND

DETAIL NUMBER — 1 / A802 SIM — DETAIL CALLOUTS — SHEET ON WHICH DETAIL IS SHOWN

ELEVATION NUMBER — A1 / A101 — EXTERIOR ELEVATIONS — SHEET ON WHICH ELEVATION IS SHOWN

ELEVATION NUMBER — 1 Ref / A101; 1 Ref, Ref 1, A101, Ref 1, 1 Ref — INTERIOR ELEVATIONS — SHEET ON WHICH ELEVATION IS SHOWN

SECTION NUMBER — 1 / A909 SIM — BUILDING SECTIONS — SHEET ON WHICH SECTION IS SHOWN

SECTION NUMBER — 1 / A909 SIM — WALL SECTIONS — SHEET ON WHICH SECTION IS SHOWN

FLOOR / 0'-0" — FLOOR OR ROOF LEVEL NAME — VERTICAL ELEVATION

TRUE NORTH — PROJECT NORTH — NORTH ARROW

1 — DRAWING REVISION

MATCH LINE

Stantec
801 S. Figueroa Street, Suite 300
Los Angeles, CA 90017

Copyright Reserved
The Contractor shall verify and be responsible for all dimensions. DO NOT scale the drawing - any errors or omissions shall be reported to Stantec without delay.
The Copyrights to all designs and drawings are the property of Stantec. Reproduction or use for any purpose other than that authorized by Stantec is forbidden.

REVISION	DESCRIPTION	DATE
5	100% RESUBMITTAL 2	08/19/2024
	100% RESUBMITTAL	5/13/2024
3	100% CONSTRUCTION DRAWING SUBMITTAL	03/18/2024
2	90% UPDATED CONSTRUCTION SUBMITTAL	02/13/2024
1	90% CONSTRUCTION DRAWING SUBMITTAL	12/07/2023

REPLACEMENT OF MECHANICAL UNITS AT SANTA ANA BUS BASE
4301 W MacArthur Blvd, Santa Ana, CA 92704

COVERSHEET

JOB #:	
DESIGN BY:	Designer
DRAWN BY:	Author
CHECKED BY:	Checker
DATE:	
SCALE:	12" = 1'-0"
SHEET:	G-000W

OCTA
ORANGE COUNTY TRANSPORTATION AUTHORITY
550 SOUTH MAIN STREET, ORANGE, CA

IFB 4-2550 EXHIBIT B

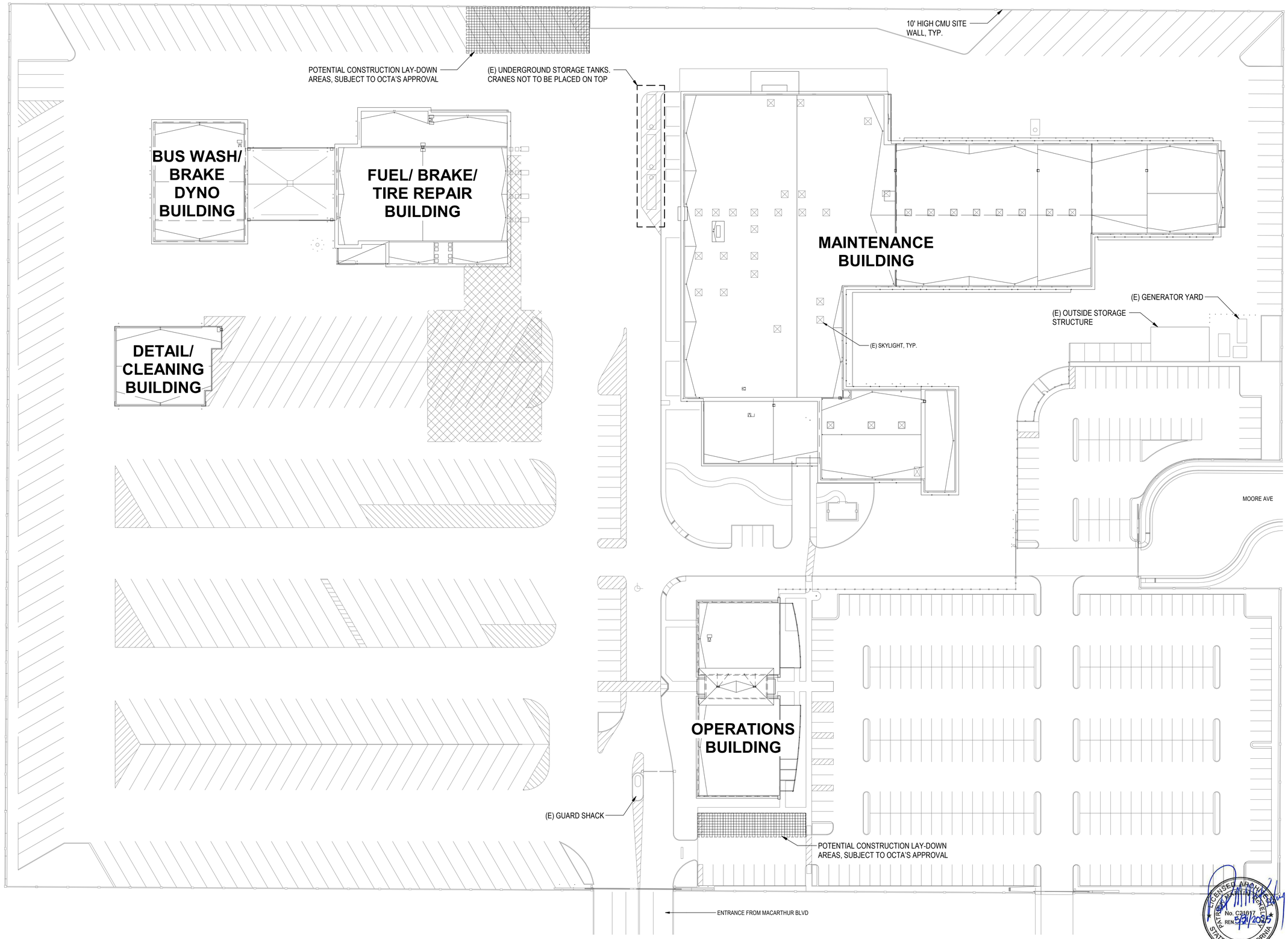

Stantec

801 S. Figueroa Street, Suite 300
Los Angeles, CA 90017

Copyright Reserved
The Contractor shall verify and be responsible for all dimensions. DO NOT scale the drawing - any errors or omissions shall be reported to Stantec without delay.
The Copyright in all designs and drawings are the property of Stantec. Reproduction or use for any purpose other than that authorized by Stantec is forbidden.

REVISION	DESCRIPTION	DATE
	100% RESUBMITTAL	5/13/2024
3	100% CONSTRUCTION DRAWING SUBMITTAL	03/18/2024
2	90% UPDATED CONSTRUCTION SUBMITTAL	02/13/2024
1	90% CONSTRUCTION DRAWING SUBMITTAL	12/07/2023

REPLACEMENT OF MECHANICAL UNITS AT SANTA ANA BUS BASE
4301 W MacArthur Blvd, Santa Ana, CA 92704

OVERALL SITE PLAN

JOB #:	
DESIGN BY:	Designer
DRAWN BY:	Author
CHECKED BY:	Checker
DATE:	
SCALE:	1" = 40'-0"
SHEET:	G-100W

OCTA
ORANGE COUNTY TRANSPORTATION AUTHORITY
550 SOUTH MAIN STREET, ORANGE, CA

LICENSED ARCHITECT
PATRICK MARTIN PACKELL
No. C21617
REN. 5/31/2025
STATE OF CALIFORNIA

Autodesk Docs://2014233703_Santa_Ana_Bus/arch_2014233703-Revit22.rvt

5/9/2024 10:14:27 AM

IFB 4-2550 EXHIBIT B

GENERAL NOTES

1. FOR ALL THE EXISTING EQUIPMENT NOTED TO BE RETAINED AND REUSED:
   BEFORE DEMOLITION COMMENCES ON SITE, THE CONTRACTOR SHALL SURVEY AND ESTABLISH CONDITION AND CAPACITIES. ANY DAMAGE OR DEFICIENCY TO EXISTING EQUIPMENT DISCOVERED BY THE CONTRACTOR SHALL BE RECORDED AT THIS STAGE BY THE CONTRACTOR AND A FULL WRITTEN REPORT SUBMITTED TO THE OWNERS REPRESENTATIVE FOR REVIEW. THE REPORT WILL INCLUDE PHOTOGRAPHIC EVIDENCE OF DAMAGE.
2. ALL POWER SUPPLIES TO EXISTING EQUIPMENT TO BE REMOVED SHALL BE ISOLATED AND MADE SAFE PER NEC PRIOR TO DEMOLITION STARTS.
3. THE PIPEWORK AND ASSOCIATED EQUIPMENT TO BE DEMOLISHED SHALL BE REMOVED FROM SITE.
4. ALL EQUIPMENT TO BE REUSED SHALL BE CAREFULLY REMOVED PRIOR TO DEMOLITON, AND STORED IN A PROTECTED AREA ON SITE READY FOR LATER RE-INSTALLATION. EQUIPMENT TO REMAIN IN PLACE SHALL BE WELL PROTECTED FROM DAMAGE OR DUST.,
5. NO EQUIPMENT SHALL BE STORED ON THE ROOF.
6. ANY DAMAGE TO EXISTING EQUIPMENT DURING DEMOLITION SHALL BE THE RESPONSIBILITY OF THE CONTRACTOR.
7. ALL PIPEWORK/VALVES IS TO BE REINSULATED TO COMPLY WITH THE SPECIFICATION REQUIREMENTS.
8. CONTRACTOR SHALL REMOVE CONSTRUCTION DEBRIS AND VACUUM CLEAN ALL RETAINED EQUIPMENT (INTERNAL AND EXTERNAL)- PRIOR TO TEST AND BALANCE.

DEMO WORK DEFINITION

——— EXISTING (E)

- - - - - - REMOVE EXISTING (D)

⟨###⟩ KEY NOTE

Keynote Legend

Key Value	Keynote Text
D:03	EXISTING EXHAUST FAN TO BE DEMOLISHED.

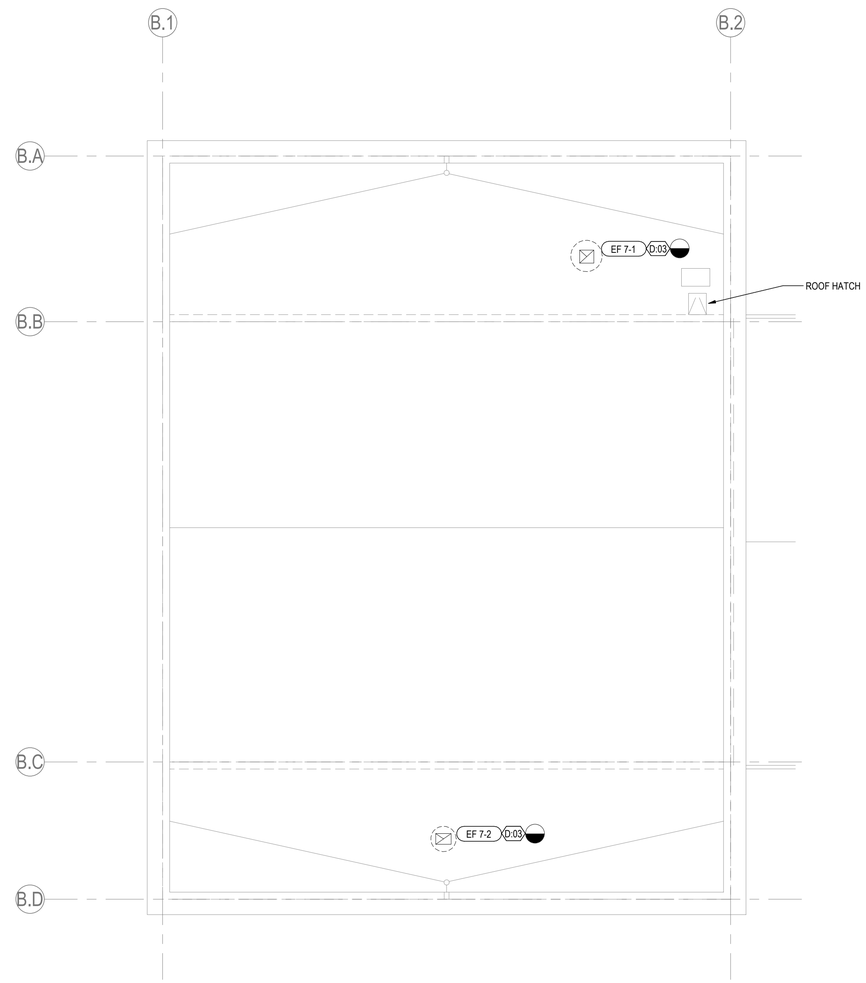

1 / MD-230 **BUS WASH/BRAKE DYNO BUILDING MECHANICAL DEMO ROOF PLAN**

3/32" = 1'-0"

N

LICENSED PROFESSIONAL ENGINEER SEVAK GALSTYAN M-39730 EXP. 12/31/25 MECHANICAL STATE OF CALIFORNIA

Stantec

801 S. Figueroa Street, Suite 300
Los Angeles, CA 90017

Copyright Reserved
The Contractor shall verify and be responsible for all dimensions. DO NOT scale the drawing - use dimensions. This drawing is not to be reproduced in any form or manner without the permission of Stantec. Reproduction or use for any purpose other than that authorized by Stantec is forbidden.

REVISION	DESCRIPTION	DATE
	100% RESUBMITTAL	5/13/2024
	100% CONSTRUCTION DRAWING SUBMITTAL	3/27/2024
	90% UPDATED CONSTRUCTION SUBMITTAL	2/13/2024
	90% CONSTRUCTION DRAWING SUBMITTAL	12/07/2023

REPLACEMENT OF MECHANICAL UNITS AT SANTA ANA BUS BASE

4301 W. MAC ARTHUR BLVD., SANTA ANA, CA

BUS WASH/BRAKE DYNO BUILDING MECHANICAL DEMO ROOF PLAN

JOB #:	
DESIGN BY:	SG
DRAWN BY:	RW
CHECKED BY:	GY
DATE:	
SCALE:	As indicated
SHEET:	MD-230W

OCTA

ORANGE COUNTY TRANSPORTATION AUTHORITY
550 SOUTH MAIN STREET, ORANGE, CA

Autodesk Docs://2014233703_Santa_Ana_Bus/mech_SantaAnaBus_2014233703.rvt

5/8/2024 11:15:09 AM

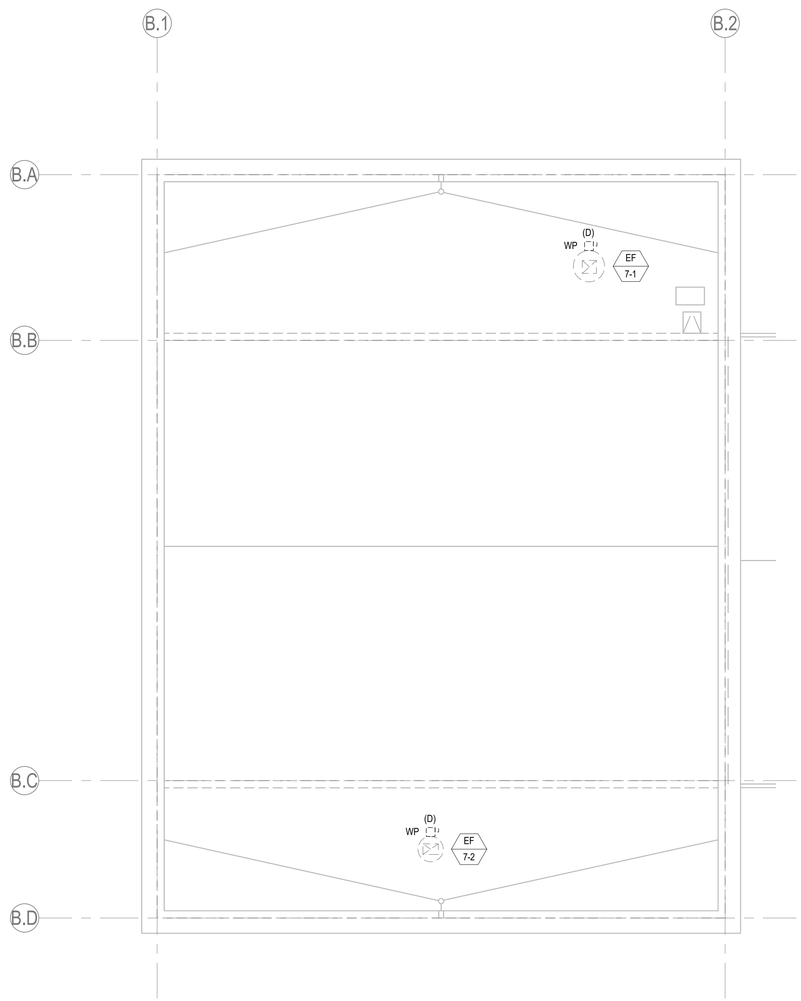

1 ED-240 **BUS WASH/BRAKE DYNO BUILDING ELECTRICAL DEMO ROOF PLAN**

3/32" = 1'-0"

N

GENERAL NOTES

1. DISCONNECT EXISTING, TO BE REPLACED, MECHANICAL UNITS POWER CONNECTION FROM EXISTING ELECTRICAL PANELS, MOTOR CONTROL CENTERS, DISTRIBUTION PANELS. REMOVE EXISTING DISCONNECT SWITCHES AND EXISTING WIRES USED FOR POWER CONNECTION TO THE EXISTING MECHANICAL UNITS, SALVAGE AND RETURN TO OWNER. PROVIDE NEW DISCONNECTS FOR THE NEW MECHANICAL UNIT POWER CONNECTION. REFER TO E-200 SERIES SHEETS FOR ADDITIONAL INFORMATION.

(E) - EXISTING TO REMAIN, PROTECT IN PLACE.
(D) - EXISTING TO BE DEMOLISHED.
$M - TOGGLE SWITCH, MOTOR RATED.
□ - NON-FUSED SAFETY SWITCH
WP - WEATHER PROOF

PROJECT DEMOLITION NOTES

1. ANY EXISTING WIRING SERVING DEVICES TO REMAIN IN SERVICE, AND WHICH IS INTERRUPTED BY WORK PERFORMED UNDER THIS CONTRACT, SHALL BE REROUTED TO MAINTAIN CIRCUIT CONTINUITY. ALL EXISTING SYSTEMS/DEVICES TO REMAIN. PRIOR TO COMMENCING WITH DEMOLITION, IDENTIFY ALL POWER, LIGHTING, COMMUNICATION, AND SIGNAL CIRCUITS PASSING THROUGH THE DEMOLITION AREA OR EXTENDING BEYOND THE DEMOLITION AREA. COORDINATE WITH DEMOLITION WORK OF OTHER TRADES.

2. THE EXISTING BUILDING MUST BE KEPT IN OPERATION AT ALL TIMES. MAINTAIN ELECTRICAL SERVICES AND SYSTEMS EXCEPT FOR EQUIPMENT BEING REPLACED BY THIS PROJECT. MAINTAIN CONTINUITY OF FIRE ALARM, LIFE SAFETY AND SECURITY SYSTEMS TO ALL OCCUPIED AREAS OF THE BUILDING THROUGHOUT THE CONSTRUCTION PERIOD. PROVIDE TEMPORARY WIRING AND BRANCH CIRCUITING AS NECESSARY TO MAINTAIN OPERATION OF EXISTING CIRCUITS AND SYSTEMS EXTENDING BEYOND REMODEL AREA. ASSUME FULL RESPONSIBILITY FOR ANY DISRUPTION TO EXISTING SERVICES. RECONNECT ANY SERVICES WHICH ARE TO REMAIN, AND WHICH HAVE BEEN DISCONNECTED DURING DEMOLITION OR CONSTRUCTION. ARRANGE WORK IN SUCH A MANNER THAT INTERRUPTIONS IN SERVICES OCCUR ONLY AT PRE-SCHEDULED TIMES. CARRY OUT THE WORK WITH A MINIMUM OF NOISE, DUST AND DISTURBANCE.

3. PERMANENTLY REMOVE ABANDONED ELECTRICAL EQUIPMENT, LIGHTING FIXTURES, ELECTRICAL DEVICES, POWER AND SIGNALLING WIRING DEVICES AND ASSOCIATED WIRE, RACEWAYS, AND/OR JUNCTION BOXES. THE REMOVAL OR RELOCATION OF EXISTING ELECTRICAL EQUIPMENT PRESENTLY CONCEALED IN EXISTING CONSTRUCTION SHALL BE COORDINATED WITH THE OWNER PRIOR TO REMOVAL OR RELOCATION. RACEWAYS AND CONDUCTORS SHALL BE REMOVED BACK TO THE SOURCE OR NEAREST REMAINING JUNCTION BOX OR DEVICE AS FAR AS PRACTICAL, OR WHERE COMPLETE REMOVAL NOT PRACTICAL, RENDERED PERMANENTLY SAFE.

4. ANY EXISTING SYSTEM OUTAGES SHALL BE OF MINIMUM DURATION AND AT A TIME ACCEPTABLE TO THE OWNER, ARRANGED A MINIMUM OF 10 WORKING DAYS IN ADVANCE. LONGER NOTICES AND/OR ADDITIONAL RESTRICTIONS PERTAINING TO OUTAGES MAY BE REQUIRED IN SOME INSTANCES, AS PER SPECIFICATIONS. VERIFY PROTOCOL WITH ALL PROJECT STAKEHOLDERS INCLUDING OWNER, TENANT, CONSTRUCTION MANAGER AND/OR USER GROUP(S) AS APPLICABLE.

5. ELECTRICAL EQUIPMENT, FIXTURES, AND/OR DEVICES SCHEDULED TO REMAIN OR TO BE RELOCATED THAT ARE DAMAGED DURING DEMOLITION SHALL BE REPLACED WITH SIMILAR TYPE AS APPROVED BY THE OWNER, AT NO ADDITIONAL CHARGE TO THE OWNER.

6. IN THE EVENT THAT DEMOLITION WORK AFFECTS THE STRUCTURAL SUPPORT OF EXISTING ELECTRICAL EQUIPMENT THAT IS TO REMAIN IN SERVICE, IT SHALL BE RE-SUPPORTED IN ACCORDANCE WITH ALL APPLICABLE CODES. PROVIDE TEMPORARY SUPPORTS WHERE REQUIRED.

7. UNUSED FLUSH MOUNTED DEVICES, OUTLET AND OTHER BOXES IN FINISHED AREAS SHALL BE REMOVED FROM WALL AND THE REMAINING HOLE PATCHED TO MATCH ADJACENT WALL SURFACES. UNUSED RACEWAYS AND SLEEVES SHALL BE CUT FLUSH AT CEILING, FLOOR OR WALL AND FILLED WITH GROUT OR REQUIRED FIRE SEALANT. UNUSED RACEWAYS ABOVE ACCESSIBLE CEILINGS SHALL BE REMOVED.

8. ELECTRICAL MATERIAL SCHEDULED FOR REMOVAL IS TO BE REMOVED FROM THE SITE AND PROPERLY DISPOSED OF AS PART OF THIS CONTRACT. ANY ELECTRICAL MATERIAL THE OWNER WISHES TO RETAIN TO BECOME THE PROPERTY OF THE OWNER AND TO BE REMOVED AND PLACED AT A LOCATION ON THE SITE AS DIRECTED BY THE OWNER.

9. THE DEMOLITION DRAWINGS SHOW THE GENERAL SCOPE OF THE DEMOLITION AND NOT EXACT DETAILS OR TOTAL EXTENT. FOR EXACT DETAILS AND TOTAL EXTENT, EACH SERVICE MUST BE CAREFULLY CHECKED ON SITE. BEFORE REMOVING SERVICES FOLLOW THE SERVICE THROUGH TO ENSURE OTHER AREAS OF THE BUILDING ARE NOT AFFECTED.

REGISTERED PROFESSIONAL ENGINEER
PAUL A. ERTSON
No. 11219
exp.06/30/2025
ELECTRICAL
STATE OF CALIFORNIA

05-13-2024

Stantec
801 S. Figueroa Street, Suite 300
Los Angeles, CA 90017

Copyright Reserved
The contractor shall verify and be responsible for all dimensions. DO NOT scale the drawing - any errors or omissions shall be reported to Stantec without delay.
This drawing is the property of Stantec and shall not be reproduced in any manner. Reproduction or use for any purpose other than that authorized by Stantec is forbidden.

REVISION	DESCRIPTION	DATE
3	100% RESUBMITTAL	05/13/2024
2	100% CONSTRUCTION DRAWING SUBMITTAL	03/27/2024
1	90% UPDATED CONSTRUCTION SUBMITTAL	02/13/2024

REPLACEMENT OF MECHANICAL UNITS AT SANTA ANA BUS BASE
4301 W. MAC ARTHUR BLVD., SANTA ANA, CA

BUS WASH/BRAKE DYNO BUILDING ELECTRICAL DEMO ROOF PLAN

JOB #:	
DESIGN BY:	IZ
DRAWN BY:	ERL
CHECKED BY:	PKE
DATE:	02/13/2024
SCALE:	As indicated
SHEET:	ED-240W

OCTA
ORANGE COUNTY TRANSPORTATION AUTHORITY
550 SOUTH MAIN STREET, ORANGE, CA

SPECIAL INSPECTION AND TEST REQUIREMENTS				
TYPE		FREQUENCY	REQUIRED INSPECTIONS AND/OR TESTS	REFERENCES CODES/STANDARDS
NONSTRUCTURAL COMPONENTS				
1. PLUMBING, MECHANICAL, AND ELECTRICAL COMPONENTS	☑	PERIODIC	INSTALLATION OF MECHANICAL AND ELECTRICAL EQUIPMENT, INCLUDING DUCTWORK, PIPING SYSTEMS AND THEIR STRUCTURAL SUPPORTS, WHERE AUTOMATIC FIRE SPRINKLER SYSTEMS ARE INSTALLED TO VERIFY ONE OF THE FOLLOWING REQUIREMENTS (SDC C,D,E,F): • MINIMUM CLEARANCES HAVE BEEN PROVIDED AS REQUIRED BY ASCE-7 SECTION 13.2.3 • A NOMINAL CLEARANCE OF NOT LESS THAN 3 INCHES HAS BEEN PROVIDED BETWEEN FIRE PROTECTION SPRIKLER SYSTEM DROPS AND SPRIGS AND: STRUCTURAL MEMBERS NOT USED COLLECTIVELY OR INDEPENDENTLY TO SUPPORT THE SPRINKERS; EQUIPMENT ATTACHED TO THE BUILDING STRUCTURE; AND OTHER SYSTEMS' PIPING	CBC 1705.12.6
	☑	PERIODIC	DESIGNATED SEISMIC SYSTEMS - EXAMINE DESIGNATED SEISMIC SYSTEMS REQUIRING SEISMIC QUALIFICATION IN ACCORDANCE WITH ASCE 7 SECTION 13.2.2 AND VERIFY THAT THE LABEL, ANCHORAGE AND MOUNTING CONFORM TO THE CERTIFICATE OF COMPLIANCE (SDC C,D,E,F): • ACTIVE MECHANICAL AND ELECTRICAL EQUIPMENT THAT MUST REMAIN OPERABLE FOLLOWING THE DESIGN EARTHQUAKE GROUND MOTION • COMPONENTS WITH HAZARDOUS SUBSTANCES AND ASSIGNED A COMPONENT IMPORTANCE FACTOR, I_p OF 1.5.	CBC 1705.12.4

STATEMENT OF SPECIAL INSPECTIONS

INSPECTION AND TESTING REQUIREMENTS ON THIS SHEET ARE IN ACCORDANCE WITH SECTION 1705 OF THE CALIFORNIA BUILDING CODE (CBC) AND HAVE BEEN IDENTIFIED AS A STATEMENT OF SPECIAL INSPECTIONS AS REQUIRED BY CBC SECTION 1704.3. THE OWNER OF THE OWNER'S AUTHORIZED AGENT, OTHER THAN THE CONTRACTOR, SHALL EMPLOY ONE OR MORE APPROVED AGENCIES TO PROVIDE THE SPECIAL INSPECTIONS AND TESTS DURING CONSTRUCTION AS REQUIRED BY CBC SECTION 1705 AND IDENTIFY THE APPROVED AGENCIES TO THE BUILDING OFFICIAL. THESE SPECIAL INSPECTIONS AND TESTS ARE IN ADDITION TO THE INSPECTIONS BY THE BUILDING OFFICIAL THAT ARE IDENTIFIED IN CBC SECTION 110. SPECIAL INSPECTORS SHALL BE QUALIFIED IN ACCORDANCE WITH CBC SECTION 1704.2.1, AND ALL OTHER APPLICABLE SECTIONS AND STANDARDS.

DEFINITIONS	
SPECIAL INSPECTION	INSPECTION OF CONSTRUCTION REQUIRING THE EXPERTISE OF AN APPROVED SPECIAL INSPECTOR IN ORDER TO ENSURE COMPLIANCE WITH THE BUILDING CODE AND THE APPROVED CONSTRUCTION DOCUMENTS.
SPECIAL INSPECTOR	A QUALIFIED PERSON EMPLOYED OR RETAINED BY AN APPROVED AGENCY AND APPROVED BY THE BUILDING OFFICIAL AS HAVING THE COMPETENCE NECESSARY TO INSPECT A PARTICULAR TYPE OF CONSTRUCTION REQUIRING SPECIAL INSPECTION.
PERIODIC	SPECIAL INSPECTION BY THE SPECIAL INSPECTOR WHO IS INTERMITTENTLY PRESENT WHERE THE WORK HAS BEEN OR IS BEING PERFORMED AND AT THE COMPLETION OF WORK.
CONTINUOUS	SPECIAL INSPECTION BY THE SPECIAL INSPECTOR WHO IS PRESENT CONTINUOUSLY WHEN AND WHERE THE WORK TO BE INSPECTED IS BEING PERFORMED
☑	INDICATES SPECIAL INSPECTION OF ITEM MAY BE REQUIRED FOR THE WORK DEFINED IN THE CONSTRUCTION DOCUMENTS FOR THIS PROJECT.

GENERAL NOTES

VI. STRUCTURAL LUMBER

1. ALL STRUCTURAL SAWN LUMBER SHALL BE DOUGLAS FIR LARCH AS GRADED BY THE WWPA OR WCLIB WITH THE FOLLOWING MINIMUM GRADES, UNLESS NOTED OTHERWISE:
   A. 4X AND LARGER BEAMS OR JOISTS, CONCEALED: NO. 1
   B. 4X AND LARGER BEAMS OR JOISTS, EXPOSED: SELECT STRUCTURAL
2. ALL STRUCTURAL COMPOSITE LUMBER (SCL) OR ENGINEERED LUMBER SHALL BE AS FOLLOWS:
   A. I-JOISTS: TJI JOISTS MANUFACTURED BY WEYERHAUSER (ESR-1153)
   B. LSL: TIMBERSTRAND LSL MANUFACTURED BY WEYERHAUSER (ESR-1387)
   C. LVL: MICROLLAM LVL (2.0E) MANUFACTURED BY WEYERHAUSER (ESR-1387)
   D. PSL: PARALLAM PSL (2.0E) MANUFACTURED BY WEYERHAUSER (ESR-1387)
   E. SUBSTITUTION OF PRODUCTS LISTED ABOVE SHALL BE SUBMITTED TO ENGINEER FOR REVIEW AND APPROVAL.
3. ALL STRUCTURAL TIMBER FRAMING SHALL HAVE A MAXIMUM MOISTURE CONTENT OF 19% AT THE TIME OF ENCLOSURE, REGARDLESS OF THE MOISTURE CONTENT AT THE TIME OF MANUFACTURE. TIMBER FLOOR FRAMING, INCLUDING JOISTS AND BEAMS, WITH MORE THAN 2 FRAMED LEVELS ABOVE THEM SHALL BE DESIGNATED AS 'S-DRY' OR 'MC15' AND HAVE A MAXIMUM MOISTURE CONTENT OF 15% AT THE TIME OF ENCLOSURE.
4. ALL LUMBER LOCATED IN DIRECT CONTACT WITH CONCRETE OR MASONRY INCLUDING BUT NOT LIMITED TO SILL PLATES, NAILERS, AND LEDGERS SHALL BE PRESSURE TREATED DOUGLAS FIR.
5. ALL HARDWARE SHALL BE SIMPSON STRONG-TIE CO INSTALLED PER MANUFACTURERS RECOMMENDATIONS. SUBSTITUTION OF EQUIVALENT HARDWARE FROM AN ALTERNATE MANUFACTURER SHALL BE SUBMITTED TO THE ENGINEER FOR REVIEW AND APPROVAL.
6. MINIMUM FASTENING AND NAILING OF TIMBER COMPONENTS SHALL BE IN ACCORDANCE WITH CBC TABLE 2304.10.1.
7. FASTENERS SHALL BE PROVIDED NEW AND WITHOUT EXCESSIVE RUST. ALL FASTENERS EXPOSED TO WEATHER SHALL BE GALVANIZED.
8. ALL METAL FASTENERS IN CONTACT WITH PRESERVATIVE-TREATED LUMBER SHALL BE STAINLESS STEEL OR OTHERWISE CERTIFIED BY THE MANUFACTURER TO RESIST CORROSION CAUSED BY THE SPECIFIC TREATMENT APPLIED TO THE WOOD.
9. DO NOT CUT, BORE, COUNTERSINK OR NOTCH WOOD MEMBERS EXCEPT WHERE EXPLICITY SHOWN IN THE DETAILS.
10. BOLTS AND LAG SCREWS:
   A. BOLTS AND LAG SCREWS SHALL CONFORM TO ASTM A307 AND MEET THE DIMENSIONAL STANDARDS OF ANSI/ASME B18.2.1.
   B. HOLES FOR BOLTS SHALL BE A MINIMUM 1/32" TO A MAXIMUM OF 1/16" LARGER THAN THE BOLT DIAMETER.
   C. BOLTS SHALL BE ACCURATELY ALIGNED IN MAIN MEMBERS AND SIDE PLATES. BOLTS SHALL NOT BE FORCIBLY DRIVEN INTO PLACE.
   D. BORED LEAD HOLES FOR LAG SCREWS SHALL BE 40-70% OF THE SHANK DIAMETER AT THE THREADED PORTION OF THE SCREW, AND THE SAME DIAMETER AS THE SHANK AT THE SHANK.
   E. LAG SCREWS SHALL BE TURNED, NOT DRIVEN INTO PLACE.
   F. ALL BOLTS, NUTS, AND LAG SCREWS SHALL BE PROVIDED WITH FLAT OR MALLEABLE WASHERS WHERE BEARING AGAINST DIRECTLY AGAINST WOOD.
   G. ALL BOLTS AND LAG SCREWS SHALL BE TIGHTENED UPON INSTALLATION AND RE-TIGHTENED BEFORE CLOSING IN OR AT COMPLETION OF JOB.

VII. STRUCTURAL STEEL:

1. STRUCTURAL STEEL SHALL BE DETAILED, FABRICATED AND ERECTED IN ACCORDANCE WITH AISC 360.
2. UNLESS OTHERWISE NOTED, ALL STRUCTURAL STEEL SHALL CONFORM TO THE FOLLOWING:
   A. ANGLES AND CHANNELS: ASTM A36 (FY = 36 KSI)
   B. PLATES, BARS: ASTM A36 (FY = 36 KSI)
3. FIELD CUTTING OR DRILLING STRUCTURAL STEEL IS STRICTLY PROHIBITED WITHOUT PRIOR REVIEW AND APPROVAL BY SEOR. ALL HOLES AND CUTS SHALL BE PERFORMED IN THE SHOP AS IDENTIFIED ON STRUCTURAL DRAWINGS OR SHOP DRAWINGS.
4. WELDED CONNECTIONS:
   A. ALL WELDS SHALL CONFORM TO AWS D1.1. WELDING ELECTRODES SHALL BE CLASS E70XX.
   B. MINIMUM FILLET WELD SIZE SHALL BE 1/4 " UNLESS NOTED OTHERWISE.
   C. WELDING SHALL BE PERFORMED BY QUALIFIED WELDERS, REFER TO SPECIFICATIONS.
   D. WHERE FIELD WELDING IS SPECIFICALLY NOTED, THE DESIGNATION IS GIVEN AS A SUGGESTED CONSTRUCTION PROCEDURE ONLY. THE CONTRACTOR SHALL DETERMINE SUITABILITY OF SHOP OR FIELD WELDING FOR ALL CONDITIONS. ALL BOLTED CONNECTIONS MUST BE IN ADDITION TO THESE REQUIREMENTS.
   E. WELD LENGTHS SPECIFIED ON PLANS ARE THE NET EFFECTIVE LENGTH. WELD SIZE SHALL BE AISC MINIMUM UON AS LARGER WELD.
   F. ALL CJP WELDS SHALL BE MADE WITH FILLER METAL WITH A MINIMUM CVN TOUGHNESS OF 20 FT-LBS AT -20 DEGREES F. NDT AND INSPECTIONS PER THE 'STRUCTURAL TESTING AND INSPECTIONS' SHEET.
   G. CONTRACTOR TO PROVIDE WELDING PROCEDURE SPECIFICATION FOR REVIEW AND APPROVAL BY SEOR.
5. STEEL FINISHES SHALL BE AS FOLLOWS, UNLESS NOTED OTHERWISE IN ARCHITECTURAL SPECIFICATIONS:
   A. INTERIOR TO RECEIVE ENCASEMENT OR SPRAY-ON FIREPROOFING: NONE
   B. INTERIOR TO RECEIVE FINISH PAINT: REFER TO SPECIFICATIONS
   C. EXTERIOR: HOT-DIPPED GALVANIZED COATING CONFORMING TO ASTM A123 OR HIGH-PERFORMANCE COATING AT CONDITIONS AS IDENTIFIED IN SPECIFICATIONS.
6. SCREWS SHALL BE SELF-TAPPING AND COMPLY WITH ASTM C1513.

I. GENERAL NOTES:

1. ALL STRUCTURAL WORK SHALL CONFORM TO THE DRAWINGS, THE PROJECT SPECIFICATIONS, ALL DRAWING NOTES, AND THE 2022 CALIFORNIA BUILDING CODE (CBC).
2. ALL APPLICABLE REFERENCE STANDARDS, AS MODIFIED BY THE BUILDING CODE, INCLUDE:
   A. ASCE/SEI 7-16: MINIMUM DESIGN LOADS FOR BUILDINGS AND OTHER STRUCTURES
   B. AWS D1.1: STRUCTURAL WELDING CODE - STEEL
3. THE SCOPE OF WORK IS NOT SOLELY DEFINED BY THESE DOCUMENTS.
4. TYPICAL DETAILS APPLY THROUGHOUT THE PROJECT, EVEN IF NOT SPECIFICALLY REFERENCED IN PLANS OR DETAILS. DETAILS OF CONSTRUCTION NOT FULLY SHOWN OR NOTED ON THE DRAWINGS NOR CALLED OUT IN THE SPECIFICATIONS SHALL BE OF THE SAME SIZE AND CHARACTER AS FOR SIMILAR CONDITIONS WHICH ARE SHOWN AND NOTED.
5. ALL FORCES INDICATED IN THE STRUCTURAL DRAWINGS ARE SERVICE LOADS AS DEFINED BY ASCE-7, UNLESS NOTED OTHERWISE.
6. DO NOT USE SCALED DIMENSIONS; USE ONLY WRITTEN DIMENSIONS. WHERE NO DIMENSION IS PROVIDED, CONSULT THE ARCHITECT FOR CLARIFICATIONS BEFORE PROCEEDING WITH WORK.
7. THE CONTRACTOR SHALL BE SOLELY RESPONSIBLE FOR THE CONDITIONS OF THE JOB SITE INCLUDING SAFETY OF PERSONS AND PROPERTY AND THE MEANS AND METHODS OF CONSTRUCTION.
8. ALL STRUCTURAL WORK SHALL BE COORDINATED WITH ARCHITECTURAL, MECHANICAL, ELECTRICAL, PLUMBING, ETC. REQUIREMENTS. REFER TO ARCHITECTURAL DRAWINGS FOR DIMENSIONS NOT SHOWN ON PLAN. DISCREPANCIES AND/OR INTERFERENCES SHALL BE REPORTED TO THE ARCHITECT IMMEDIATELY.
9. OPENINGS SHALL NOT BE MADE IN ANY STRUCTURAL MEMBER UNLESS SPECIFICALLY SHOWN ON THE STRUCTURAL DRAWINGS OR APPROVED BY THE STRUCTURAL ENGINEER.
10. DEFICIENT WORK AND WORK NOT IN CONFORMANCE WITH THE CONTRACT DOCUMENTS AS IDENTIFIED BY THE ARCHITECT OR INSPECTOR SHALL BE REPAIRED AT THE CONTRACTOR'S EXPENSE. CONTRACTOR SHALL COMPENSATE OWNER FOR SERVICES ARISING FROM DEFICIENT WORK.
11. CONSTRUCTION MATERIALS SHALL BE SPREAD OUT WHEN PLACED ON FRAMED FLOORS OR ROOFS. THE CONSTRUCTION MATERIAL LOAD SHALL NOT EXCEED THE DESIGN LIVE LOAD PER SQUARE FOOT. CONTRACTOR SHALL BE RESPONSIBLE FOR SHORING WHERE STRUCTURE IS NOT COMPLETE OR HAS NOT ATTAINED DESIGN STRENGTH.

II. DESIGN LOADS:

1. WIND LOAD:
   A. ULTIMATE DESIGN BASIC WIND SPEED Vult — 95 MPH
   B. WIND EXPSOURE CATEGORY: — C
   C. INTERNAL PRESSURE COEFFICIENT (GCPi): — +/- 0.18
   D. GUST EFFECT FACTOR (G): — 0.85
2. SEISMIC LOAD:
   A. SITE CLASS: — D (DEFAULT)
   B. RISK CATEGORY: — II
   C. SEISMIC IMPORTANCE FACTOR (I_p): — 1.00
   D. MAPPED SPECTRAL RESPONSE:
      a. SHORT PERIOD S_S: — 1.32g
      b. 1-SECOND PERIOD S_1: — 0.48 g
   E. DESIGN SPECTRAL RESPONSE (5% DAMPED):
      a. SHORT PERIOD S_{DS}: — 1.06 g
   F. SEISMIC DESIGN CATEGORY: — D

III. EXISTING STRUCTURE & EXISTING CONDITIONS

1. CONTRACTOR IS TO NOTIFY ENGINEER OF QUESTIONABLE EXISTING STRUCTURAL COMPONENTS (MASONRY WALLS, STEEL BEAMS & LINTEL, EXPOSED FOUNDATIONS, ETC.) AND FRAMING CONNECTIONS WHEN ENCOUNTERED.
2. CONTRACTOR TO VERIFY EXACT LOCATION OF ALL EXISTING STRUCTURAL COMPONENTS THAT WILL BE CONNECTED TO NEW FRAMING PRIOR TO STEEL FABRICATION. IT IS THE CONTRACTOR'S RESPONSIBILITY TO VERIFY ALL EXISTING DIMENSIONS AND COORDINATE THESE DIMENSIONS WITH THE STEEL FABRICATOR PRIOR TO STEEL FABRICATION TO ENSURE ARCHITECTURAL AND STRUCTURAL DESIGN CONCEPT. CONTRACTOR SHALL NOTIFY ARCHITECT AND/OR ENGINEER OF DISCREPANCIES.

IV. MECHANICAL/ELECTRICAL/PLUMBING SYSTEM SUPPORTS

1. THE CONTRACTOR SHALL DESIGN AND SUPPLY ALL ADDITIONAL MISCELLANEOUS METALS AND SYSTEM SUPPORT COMPONENTS THAT ARE NECESSARY TO SUPPORT ALL MECHANICAL, ELECTRICAL (TELECOM, AUDIO VISUAL, ETC.) AND PLUMBING/FIRE PROTECTION SYSTEMS. SUCH METALS AND SUPPORT COMPONENTS AND THEIR CONNECTIONS SHALL BE PROVIDED AS NECESSARY TO DIRECTLY AND CONCENTRICALLY IMPOSE LOADS ON THE PRIMARY STRUCTURE. STEEL ROOF DECK SHALL NOT DIRECTLY SUPPORT THESE SYSTEMS. THE CONNECTIONS TO THE PRIMARY STRUCTURE ARE SUBJECT TO THE REQUIREMENTS OF THE MISCELLANEOUS METALS SECTION ABOVE.

V. QUALITY ASSURANCE AND SPECIAL INSPECTIONS

1. OWNER WILL ENGAGE AN INDEPENDENT TESTING AGENCY TO PERFORM THE TESTS AND INSPECTIONS SHOWN ON THE 'STRUCTURAL TESTING AND INSPECTIONS' SHEET. IT IS THE CONTRACTOR'S RESPONSIBILITY TO PROVIDE ADEQUATE PRIOR NOTICE TO ALLOW FOR COMPLETION OF THESE REQUIREMENTS.

ABBREVIATIONS

#	POUND
&	AND
(N)	NEW
@	AT
AB	ANCHOR BOLT
ACS	ALL COMMON SIDES
ADDL	ADDITIONAL
AESS	ARCHITECTURALLY EXPOSED STRUCTURAL STEEL
ALT	ALTERNATE
ARCH, ARCH'L	ARCHITECT, ARCHITECTURAL
BL	BRICKLEDGE
BLDG	BUILDING
BLKG	BLOCKING
BM	BEAM
BN	BOUNDARY NAILING
BO	BOTTOM OF
BOB	BOTTOM OF BEAM
BOD	BOTTOM OF DECK
BOS	BOTTOM OF STEEL
BOT, BOTT	BOTTOM
BP	BASE PLATE
BRBF	BUCKLING RESTRAINED BRACED FRAME
BRG	BEARING
BTWN	BETWEEN
C	CHANNEL
CB	CONCRETE BEAM
CC	CARRIED COLUMN
CEN	CENTER
CFMF	COLD-FORMED METAL FRAMING
CIP	CAST IN PLACE
CJ	CONTROL JOINT
CJP	COMPLETE JOINT PENETRATION
CL	CENTERLINE
CLR	CLEAR
CMU	CONCRETE MASONRY UNIT
COL	COLUMN
CONC	CONCRETE
CONN	CONNECT, CONNECTION
CONT	CONTINUOUS
CTR	CENTERED
CWI	CERTIFIED WELDING INSPECTOR
D, DIA	DIAMETER
DBA	DEFORMED BAR ANCHOR
DBL	DOUBLE
DEF	DEFORMED, DEFINITION
DEFL	DEFLECTION
DET, DTL	DETAIL
DIAG	DIAGONAL
DN	DOWN
DWG	DRAWING
EA	EACH
EF	EACH FACE
EJ	EXPANSION JOINT
EL	ELEVATION
ELEV	ELEVATOR
EN	EDGE NAILING
EOR	ENGINEER OF RECORD
EOS	EDGE OF SLAB
EQ	EQUAL
EQ SPA	EQUAL SPACE
ES	EACH SIDE
EW	EACH WAY
EXIST, (E)	EXISTING
EXT	EXTERIOR
FD	FLOOR DRAIN
FDN, FNDN	FOUNDATION
FF EL	FINISH FLOOR ELEVATION
FN	FIELD NAILING
FOA	FACE OF ANGLE
FOC	FACE OF CONCRETE
FOM	FACE OF MASONRY
FT	FEET
FTG	FOOTING
Fy	YIELD STRESS
GA	GAGE, GAUGE
GALV	GALVANIZED
GB	GRADE BEAM
GLB	GLUED-LAMINATED BEAM
GT	GIRDER TRUSS
H, HORIZ	HORIZONTAL
HC	HOLLOW CORE
HI	HIGH
HK	HOOK
HSS	HOLLOW STRUCTURAL STEEL
IN	INCHES
INFO	INFORMATION
INT	INTERIOR
JST	JOIST
JT	JOINT
K	KIPS
KB	KNEE BRACE
L	ANGLE
LB	POUND
LF	LINEAR FOOT
LG	LENGTH
LLBB	LONG LEG BACK TO BACK
LLH	LONG LEG HORIZONTAL
LLV	LONG LEG VERTICAL
LO	LOW
LT WT	LIGHTWEIGHT
LVL	LEVEL
LWC	LIGHT WEIGHT CONCRETE
MAX	MAXIMUM
MC	MOMENT CONNECTION
MCJ	MASONRY CONTROL JOINT
MECH	MECHANICAL
MEP	MECHANICAL, ELECTRICAL & PLUMBING
MEZZ	MEZZANINE
MFR, MANUF	MANUFACTURER
MID	MIDDLE
MIL	MILLIMETER
MIN	MINIMUM
MISC	MISCELLANEOUS
MO	MASONRY OPENING
MTL	METAL
N	NORTH
NA	NOT APPLICABLE
NDT	NON-DESTRUCTIVE TESTING
NIC	NOT IN CONTRACT
NTS	NOT TO SCALE
OC	ON CENTER
OH	OPPOSITE HAND
OPNG	OPENING
OPP	OPPOSITE
OWJ	OPEN WEB JOIST
PAF	POWER ACTUATED FASTENERS
PERP	PERPENDICULAR
PJP	PARTIAL JOINT PENETRATION
PL	PLATE
PLF	POUNDS PER LINEAR FOOT
PLYWD	PLYWOOD
PSF	POUNDS PER SQUARE FOOT
PSI	POUNDS PER SQUARE INCH
R	RADIUS
REF	REFER, REFERENCE
REINF	REINFORCED, REINFORCEMENT
REM	REMAINDER
REQ'D	REQUIRED
REQ'MTS, REQMTS	REQUIREMENTS
REV	REVISION
SAD	SEE ARCHITECTURAL DRAWINGS
SC	SLIP CRITICAL
SCHED	SCHEDULE
SECT	SECTION
SF	SQUARE FEET
SHT	SHEET
SHTG	SHEATHING
SIM	SIMILAR
SMD	SEE MECHANICAL DRAWINGS
SMS	SHEET METAL SCREW
SOG	SLAB ON GRADE
SPA	SPACES, SPACING
SQ	SQUARE
SSH	SHORT SLOTTED HOLE
STD	STANDARD
STL	STEEL
STRUCT	STRUCTURE, STRUCTURAL
SUPP	SUPPORT
T&B	TOP AND BOTTOM
TEMP	TEMPORARY
THK	THICK
TO	TOP OF
TOC	TOP OF CONCRETE
TOF	TOP OF FOUNDATION
TOM	TOP OF MASONRY
TOS	TOP OF STEEL
TOSC	TOP OF STRUCTURAL CONCRETE
TOSL	TOP OF SLAB
TOT	TOTAL
TOW	TOP OF WALL
TYP	TYPICAL
UON	UNLESS OTHERWISE NOTED
V, VERT	VERTICAL
VIF	VERIFY IN FIELD
W	WIDE FLANGE
W/	WITH
W/O	WITHOUT
WB	WIND BRACE
WBBP	WIND BRACE BASEPLATE
WHSS	WELDED HEADED STEEL STUD
WP	WORKING POINT, WORK POINT
WRT	WITH RESPECT TO
WT	WEIGHT
WWF	WELDED-WIRE FABRIC
YD	YARD

REGISTERED PROFESSIONAL ENGINEER
ALAN W. DYCK
5470
EXP. 09-30-24
STRUCTURAL
STATE OF CALIFORNIA
03-22-24

IFB 4-2550 EXHIBIT B

Stantec
801 S. Figueroa Street, Suite 300
Los Angeles, CA 90017

Copyright Reserved
The Contractor shall verify and be responsible for all dimensions. DO NOT scale the drawing - any errors or omissions shall be reported to Stantec without delay.
The Copyrights to all designs and drawings are the property of Stantec. Reproduction or use for any purpose other than that authorized by Stantec is forbidden.

REVISION	DESCRIPTION	DATE
5/13/2024	100% RESUBMITTAL	
03/27/2024	100% CONSTRUCTION DRAWING SUBMITTAL	
02/13/2024	UPDATED 90% CONSTRUCTION DRAWING SUBMITTAL	
12/07/2023	90% CONSTRUCTION DRAWING SUBMITTAL	

REPLACEMENT OF MECHANICAL UNITS AT SANTA ANA BUS BASE
4301 W. MAC ARTHUR BLVD., SANTA ANA, CA

GENERAL NOTES

JOB #:	
DESIGN BY:	IS
DRAWN BY:	DK
CHECKED BY:	MP
DATE:	12/07/2023
SCALE:	3/4" = 1'-0"
SHEET:	S-100W

OCTA
ORANGE COUNTY
TRANSPORTATION AUTHORITY
550 SOUTH MAIN STREET, ORANGE, CA

IFB 4-2550 EXHIBIT B

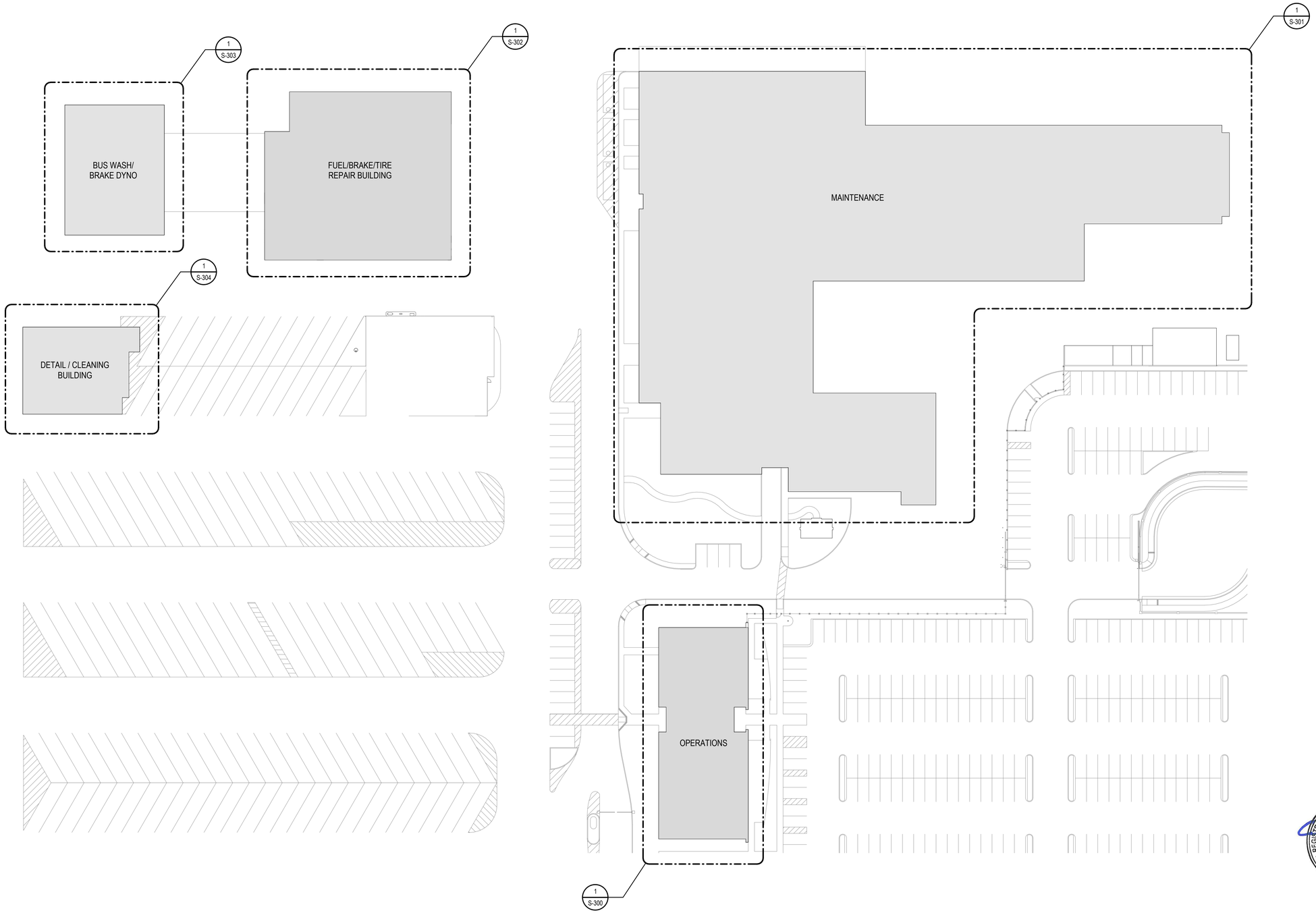

1 S-200 **OVERALL PLAN**
1" = 40'-0"

N

Stantec
801 S. Figueroa Street, Suite 300
Los Angeles, CA 90017

Copyright Reserved
The Contractor shall verify and be responsible for all dimensions. DO NOT scale the drawing - any errors or omissions shall be reported to Stantec without delay.
The copyright in all designs and drawings are the property of Stantec. Reproduction or use for any purpose other than that authorized by Stantec is forbidden.

REVISION	DESCRIPTION	DATE
5/13/2024	100% RESUBMITTAL	
03/27/2024	100% CONSTRUCTION DRAWING SUBMITTAL	
02/13/2024	UPDATED 90% CONSTRUCTION DRAWING SUBMITTAL	
12/07/2023	90% CONSTRUCTION DRAWING SUBMITTAL	

REPLACEMENT OF MECHANICAL UNITS AT SANTA ANA BUS BASE
4301 W. MAC ARTHUR BLVD., SANTA ANA, CA

OVERALL PLAN

JOB #:	
DESIGN BY:	IS
DRAWN BY:	DK
CHECKED BY:	MP
DATE:	12/07/2023
SCALE:	1" = 40'-0"
SHEET:	S-200W

REGISTERED PROFESSIONAL ENGINEER
ALAN W. DYCK
5470
EXP. 09-30-24
STRUCTURAL
STATE OF CALIFORNIA
03-22-24

OCTA
ORANGE COUNTY
TRANSPORTATION AUTHORITY
550 SOUTH MAIN STREET, ORANGE, CA

Autodesk Docs://2014233703_Santa_Ana_Bus/stn_struc_2014233703_Santa_Ana_Bus_OCTA_CTO-3_Mech_Units.rvt

3/22/2024 10:38:09 AM

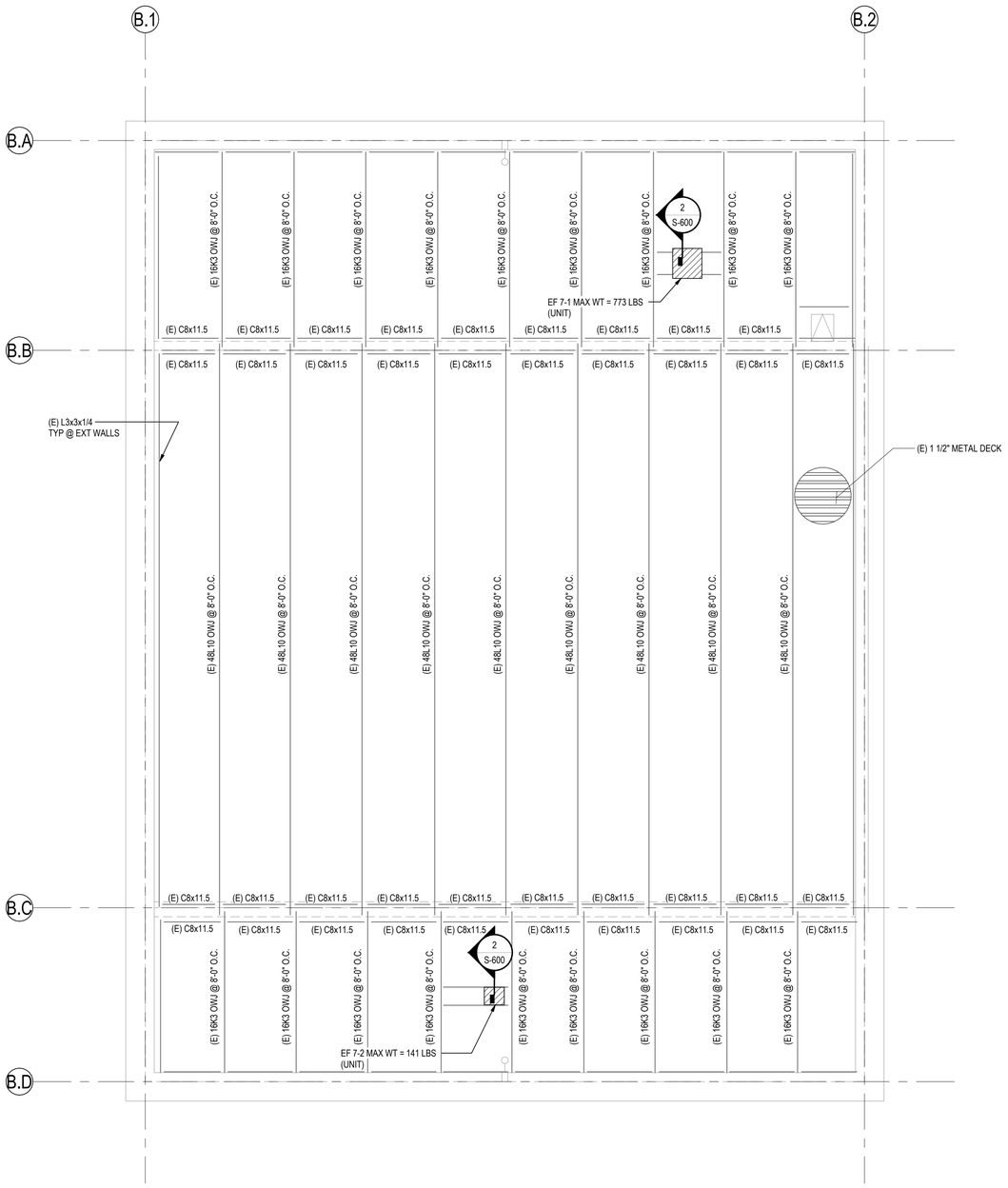

ROOF PLAN NOTES:

1. SEE SHEET S-100 FOR STRUCTURAL GENERAL NOTES
2. VERIFY/OBTAIN ALL DIMENSIONS FROM MEP DRAWINGS.
3. INDICATES (E) EXTERIOR PERIMETER WALL.
4. PROVIDE AND COORDINATE OPENING FOR MECHANICAL WORK AS REQUIRED.
5. CONTRACTOR TO FIELD VERIFY EXISTING CONDITIONS PRIOR TO COMMENCING WORKS. CONTRACTOR TO NOTIFY EOR OF DISREPANCIES BETWEEN FIELD CONDITIONS AND DRAWINGS.
6. INDICATES (N) MECHANICAL UNIT TO REPLACE EXISTING TYP UON.
7. EXISTING ROOF FRAMING INFORMATION WAS OBTAINED FROM RECORD DRAWINGS DATED 10/11/06.

1 S-303 **BUS WASH/BRAKE DYNO BUILDING STRUCTURAL ROOF PLAN**

1/8" = 1'-0"

N

Stantec
801 S. Figueroa Street, Suite 300
Los Angeles, CA 90017

Copyright Reserved
The Contractor shall verify and be responsible for all dimensions. DO NOT scale the drawing - any errors or omissions shall be reported to Stantec without delay.
These drawings and specifications are the property and copyright of Stantec. Reproduction or use for any purpose other than that authorized by Stantec is forbidden.

REVISION	DESCRIPTION	DATE
5/13/2024	100% RESUBMITTAL	
03/27/2024	100% CONSTRUCTION DRAWING SUBMITTAL	
02/13/2024	UPDATED 90% CONSTRUCTION DRAWING SUBMITTAL	
12/07/2023	90% CONSTRUCTION DRAWING SUBMITTAL	

REPLACEMENT OF MECHANICAL UNITS AT SANTA ANA BUS BASE
4301 W. MAC ARTHUR BLVD., SANTA ANA, CA

BUS WASH/BRAKE DYNO BUILDING STRUCTURAL ROOF PLAN

JOB #:	
DESIGN BY:	IS
DRAWN BY:	DK
CHECKED BY:	MP
DATE:	12/07/2023
SCALE:	1/8" = 1'-0"
SHEET:	S-303W

REGISTERED PROFESSIONAL ENGINEER
ALAN W. DYCK
5470
EXP. 09-30-24
STRUCTURAL
STATE OF CALIFORNIA
03-22-24

OCTA
ORANGE COUNTY TRANSPORTATION AUTHORITY
550 SOUTH MAIN STREET, ORANGE, CA

Autodesk Docs://2014233703_Santa_Ana_Bus/stn_struc_2014233703_Santa_Ana_Bus_OCTA_CTO-3_Mech_Units.rvt
3/22/2024 10:38:17 AM

MODEL #'S	WT (LBS)	B (IN)	D (IN)	H (IN)	CG (IN)
SF 4-1	175	26	26	27.25	49
SF 5-1, 5-2, 5-3	766	52	52	39.25	56
SF 5-4	783	52	52	39.25	56
SF 5-5	307	34	34	27.25	49
SF 5-8	199	26	26	27.25	49
SF 5-9,6-2	427	40	40	31.25	52
SF 5-12	194	26	26	27.25	49
SF 5-13,5-16	196	26	26	27.25	49
SF 5-14	307	34	34	27.25	49
SF 5-15	194	26	26	27.25	49
SF 6-1	783	52	52	39.25	56
AC 4-2	419	52	45	46	60
AC 5-1, 5-2	419	52	45	46	73

NOTES:
1. MAX WEIGHT DOES NOT INCLUDE (E) CURB.
2. RE-USE EXISTING CURB SMD.

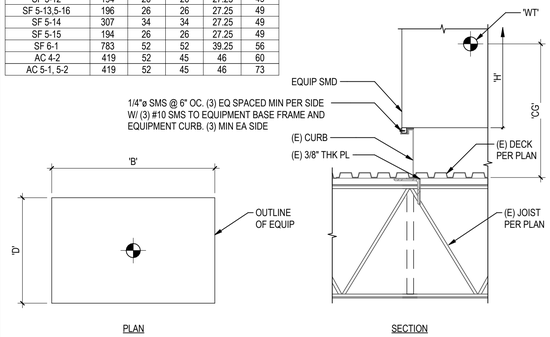

4 S-600 MECH UNIT ANCHORAGE GROUP C

NTS

MODEL #'S	WT (LBS)	B (IN)	D (IN)	H (IN)	CG (IN)
EF 5-1	2595	66	66	136.79	122
EF 5-2 & 5-5	2095	60	60	125.19	108
EF 5-3 & 5-4	2095	60	60	125.19	108
EF 5-6	745	40	40	83.45	94
EF 5-25	1035	48	48	103.79	105
EF 5-28	1225	66	66	134.79	121
EF 5-37	1036	48	48	103.79	105
EF 6-1	2113	60	60	127.19	117
EF 6-2	1805	56	56	120.45	114
EF 6-3	1065	48	48	101.79	104
SF 5-6	352	34	34	27.25	71
SF 5-10	377	34	34	27.25	71

NOTES:
1. MAX WEIGHT DOES NOT INCLUDE (E) CURB.
2. RE-USE EXISTING CURB SMD.

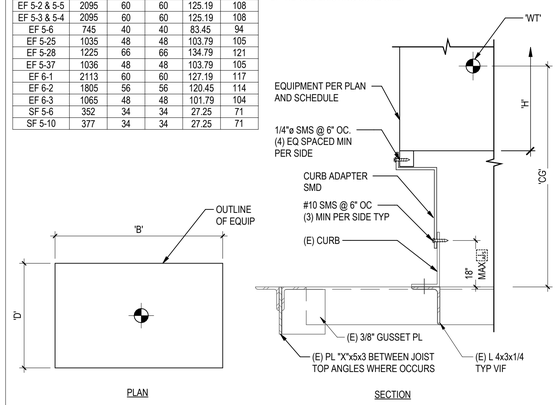

3 S-600 MECH UNIT ANCHORAGE GROUP B

NTS

MODEL #'S	WT (LBS)	B (IN)	D (IN)	H (IN)	CG (IN)
EF 4-1	45	19	19	28.25	46
EF 4-2	54	19	19	28.25	46
EF 4-3	54	19	19	28.25	46
EF 4-4, 5-26	34	19	19	13.38	38
EF 5-7, 5-8, 5-9, 5-10	165	34	34	33.88	49
EF 5-11	28	17	17	13.5	38
EF 5-13	54	19	19	28.25	46
EF 5-16, 5-17, 5-18	165	34	34	33.88	49
EF 5-19	140	30	30	28.63	46
EF 5-20	97	22	22	29.75	47
EF 5-21, 5-22	132	30	30	28.63	46
EF 5-24	76	22	22	29.75	47
EF 5-29	84	22	22	29.75	47
EF 5-31	119	22	22	29.75	47
EF 5-32	34	19	19	13.38	38
EF 5-33	203	34	34	33.88	49
EF 5-34	119	22	22	29.75	47
EF 5-35	67	19	19	28.25	46
EF 5-38	54	19	19	28.25	46
EF 5-39	40	19	19	15.25	39
EF 5-40	57	19	19	28.25	46
EF 5-41	72	22	22	29.75	47
EF 6-4	28	17	17	13.5	38
EF 6-6	37	19	19	13.38	38
EF 6-7	203	34	34	33.88	49
EF 6-8	34	19	19	13.38	38
EF 6-9	73	22	22	29.75	47
EF 7-1	773	40	40	36	50
EF 7-2	141	30	30	28.63	46
EF 8-1	45	19	19	28.25	46
EF 5-42	95	22.91	30.88	26	47

NOTES:
1. MAX WEIGHT DOES NOT INCLUDE (E) CURB.
2. RE-USE EXISTING CURB SMD.

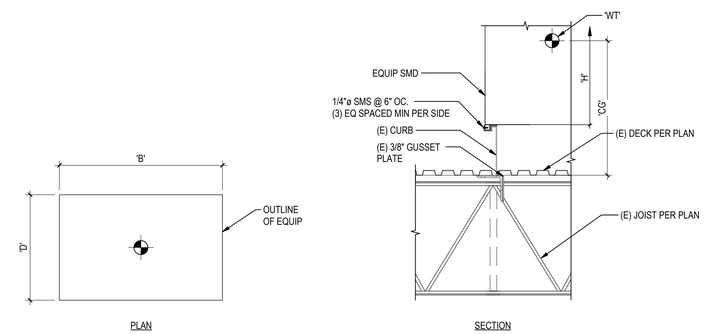

2 S-600 MECH UNIT ANCHORAGE GROUP A

NTS

MODEL #'S	WT (LBS)	B (IN)	D (IN)	H (IN)	CG (IN)
AC 4-1	419	52	45	46	73
RTU 5-4	389	48.8	41.3	35.4	80.3
RTU 6-1	474	58.6	44.3	39.4	94
HP 6-1	389	52	45	46	73
AC 6-1	419	52	45	46	73
RTU 5-5	389	52	45	46	73

NOTES:
1. MAX WEIGHT INCLUDES EQUIPMENT WT & CURB ADAPTER ONLY.
2. RE-USE EXISTING CURB SMD.

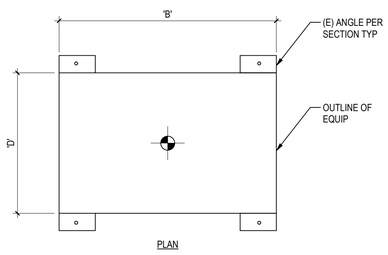

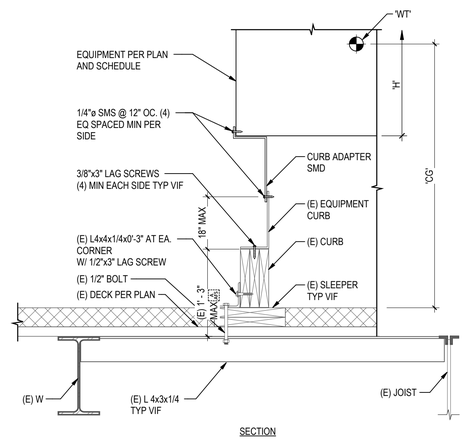

8 S-600 MECH UNIT ANCHORAGE GROUP F

NTS

MODEL #'S	WT (LBS)	B (IN)	D (IN)	H (IN)	CG (IN)
RTU 4-1	2106	52	45	46	119
RTU 4-2	968	88.08	53.28	50.88	87
RTU 4-3	1020	88.08	53.28	50.88	87
RTU 4-4	1020	88.08	53.28	50.88	87
RTU 5-1, 5-2	1924	123	87	59.04	94
RTU 5-3	1924	123	87	59.04	94

NOTES:
1. MAX WEIGHT INCLUDES EQUIPMENT WT & CURB ADAPTER ONLY.
2. RE-USE EXISTING CURB SMD.

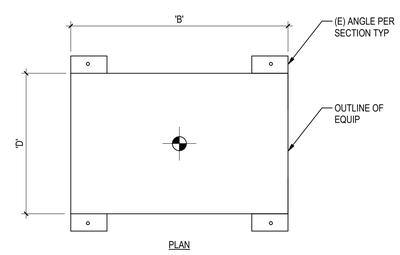

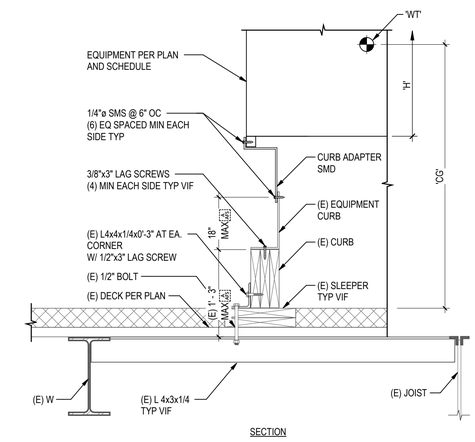

6 S-600 MECH UNIT ANCHORAGE GROUP E

NTS

MODEL #'S	WT (LBS)	B (IN)	D (IN)	H (IN)	CG (IN)
MAU 5-1	3129	186	91	60	85.5
MAU 5-2,5-5	2158	165.5	78	51	68.5
MAU 5-3,5-4	2158	165.5	78	51	68.5
MAU 5-6	3134	186	91	60	86.5
MAU 5-7	1407	140	52	39	68.5
MAU 5-8	1377	140	52	39	68.5

NOTES:
1. MAX WEIGHT INCLUDES EQUIPMENT WT & CURB ADAPTER ONLY.
2. RE-USE EXISTING CURB SMD.

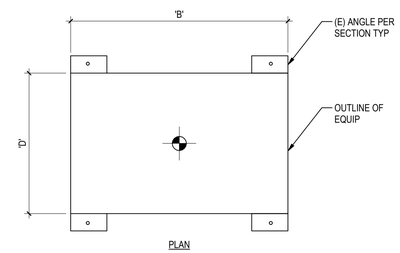

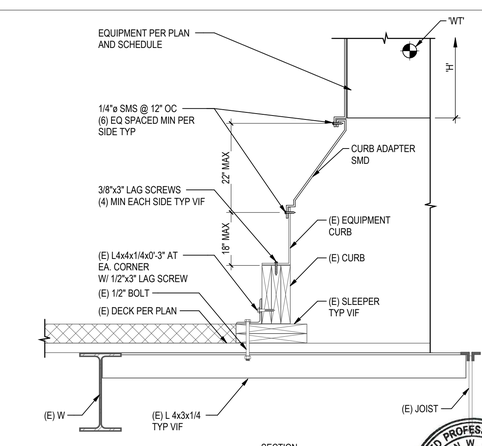

10 S-600 MECH UNIT ANCHORAGE GROUP D

NTS

REGISTERED PROFESSIONAL ENGINEER ALAN W. DYER 5470 EXP. 09-30-24 STRUCTURAL STATE OF CALIFORNIA
03-22-24

IFB 4-2550 EXHIBIT B

Stantec
801 S. Figueroa Street, Suite 300
Los Angeles, CA 90017

Copyright Reserved
The Contractor shall verify and be responsible for all dimensions. DO NOT scale the drawing - any errors or omissions shall be reported to Stantec without delay.
This drawing is the property of Stantec and must not be reproduced or used for any purpose other than that authorized by Stantec in writing before hand. Reproduction or use for any purpose other than that authorized by Stantec is forbidden.

REVISION	DESCRIPTION	DATE
5/13/2024	100% RESUBMITTAL	
03/27/2024	100% CONSTRUCTION DRAWING SUBMITTAL	
02/13/2024	UPDATED 90% CONSTRUCTION DRAWING SUBMITTAL	
12/07/2023	90% CONSTRUCTION DRAWING SUBMITTAL	

REPLACEMENT OF MECHANICAL UNITS AT SANTA ANA BUS BASE

4301 W. MAC ARTHUR BLVD., SANTA ANA, CA

ANCHORAGE SCHEDULES

JOB #:	
DESIGN BY:	IS
DRAWN BY:	DK
CHECKED BY:	MP
DATE:	12/07/2023
SCALE:	As indicated
SHEET:	S-600W

OCTA

ORANGE COUNTY TRANSPORTATION AUTHORITY
550 SOUTH MAIN STREET, ORANGE, CA

Autodesk Docs://2014233703_Santa_Ana_Bus/stn_struc_2014233703_Santa_Ana_Bus_OCTA_CTO-3_Mech_Units.rvt

3/22/2024 10:38:18 AM

IFB 4-2550 EXHIBIT B

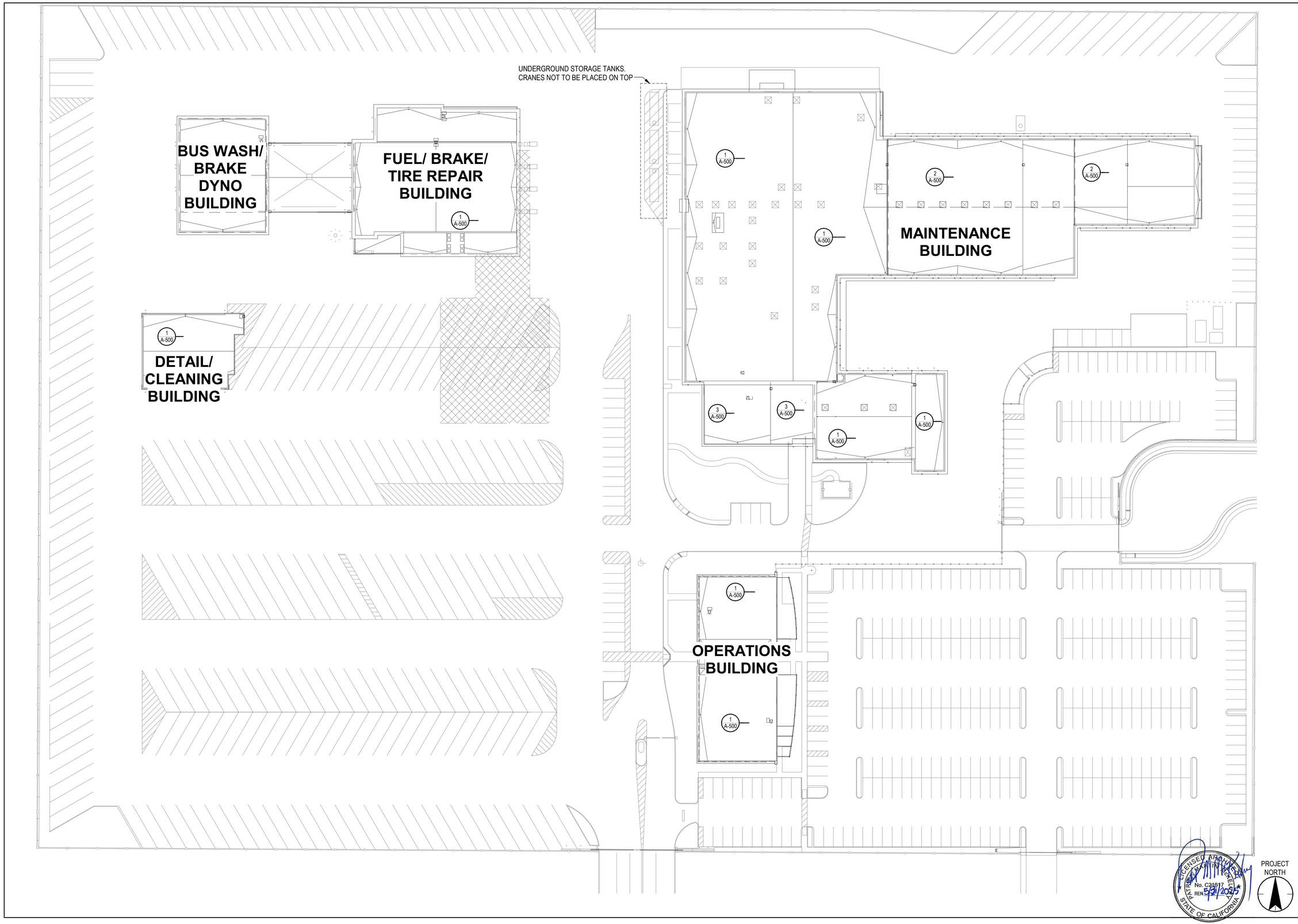

PROJECT NORTH

LICENSED ARCHITECT
PATRICK MARTIN HACKELEY
No. C21617
REN. 5/31/2025
STATE OF CALIFORNIA

Stantec
801 S. Figueroa Street, Suite 300
Los Angeles, CA 90017

Copyright Reserved
The Contractor shall verify and be responsible for all dimensions. DO NOT scale the drawing - any errors or omissions shall be reported to Stantec without delay.
The Copyright in the design and drawing is the property of Stantec. Reproduction or use for any purpose other than that authorized by Stantec is forbidden.

REVISION	DESCRIPTION	DATE
	100% RESUBMITTAL	5/13/2024
3	100% CONSTRUCTION DRAWING SUBMITTAL	03/18/2024
2	90% UPDATED CONSTRUCTION SUBMITTAL	02/13/2024
1	90% CONSTRUCTION DRAWING SUBMITTAL	12/07/2023

REPLACEMENT OF MECHANICAL UNITS AT SANTA ANA BUS BASE
4301 W MacArthur Blvd, Santa Ana, CA 92704

ARCHITECTURAL SITE PLAN

JOB #:	
DESIGN BY:	Designer
DRAWN BY:	Author
CHECKED BY:	Checker
DATE:	
SCALE:	1" = 40'-0"
SHEET:	A-100W

OCTA
ORANGE COUNTY TRANSPORTATION AUTHORITY
550 SOUTH MAIN STREET, ORANGE, CA

Autodesk Docs://2014233703_Santa_Ana_Bus/arch_2014233703-Revit22.rvt

5/9/2024 10:14:26 AM

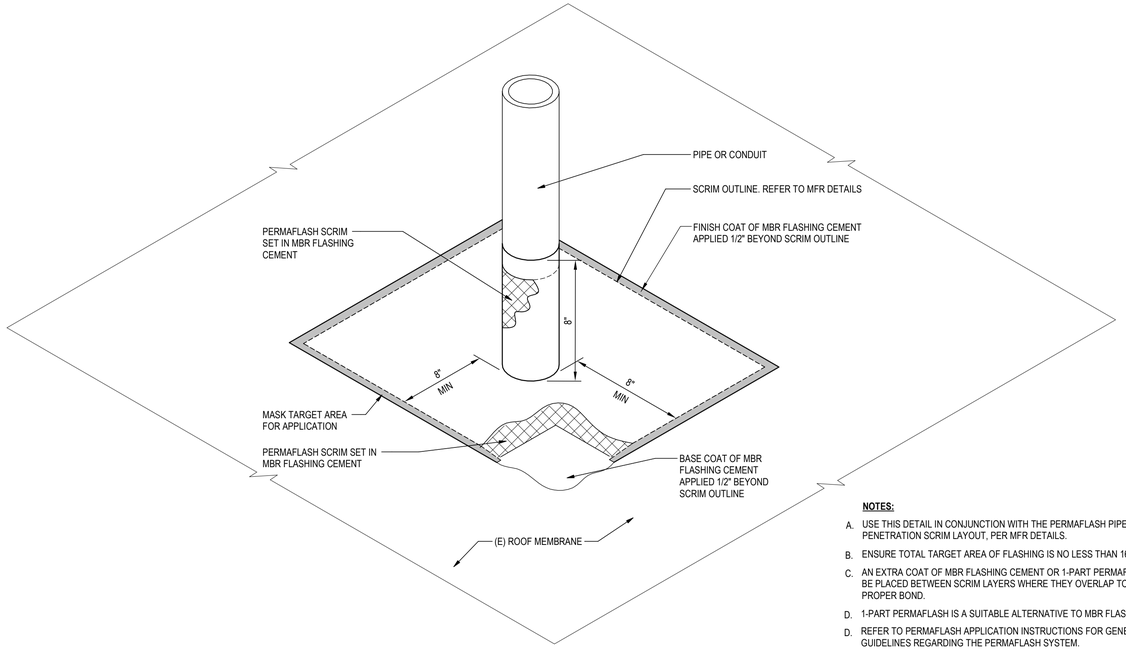

NOTES:

A. USE THIS DETAIL IN CONJUNCTION WITH THE PERMAFLASH PIPE PENETRATION SCRIM LAYOUT, PER MFR DETAILS.

B. ENSURE TOTAL TARGET AREA OF FLASHING IS NO LESS THAN 16" x 16".

C. AN EXTRA COAT OF MBR FLASHING CEMENT OR 1-PART PERMAFLASH MUST BE PLACED BETWEEN SCRIM LAYERS WHERE THEY OVERLAP TO ENSURE A PROPER BOND.

D. 1-PART PERMAFLASH IS A SUITABLE ALTERNATIVE TO MBR FLASHING CEMENT.

D. REFER TO PERMAFLASH APPLICATION INSTRUCTIONS FOR GENERAL GUIDELINES REGARDING THE PERMAFLASH SYSTEM.

E. AFTER THE PERMAFLASH HAS CURED OR GRANULES BROADCAST INTO THE WET CEMENT AN ADDITIONAL SURFACING OF JM COATING TO BE APPLIED.

5 / A-500 PIPE/ CONDUIT PENETRATION @ ROOF TYPE 1 & 3

1 1/2" = 1'-0"

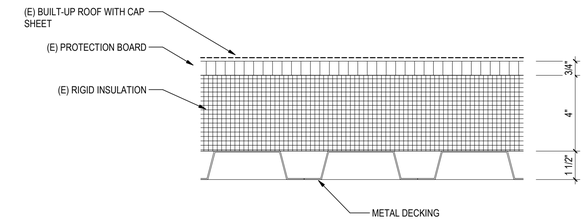

1 / A-500 ROOF TYPE 1

3" = 1'-0"

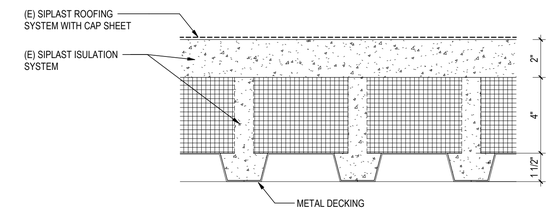

2 / A-500 ROOF TYPE 2

3" = 1'-0"

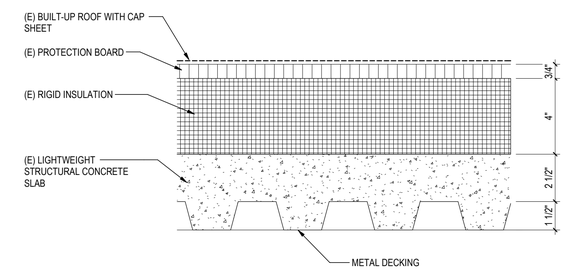

3 / A-500 ROOF TYPE 3

3" = 1'-0"

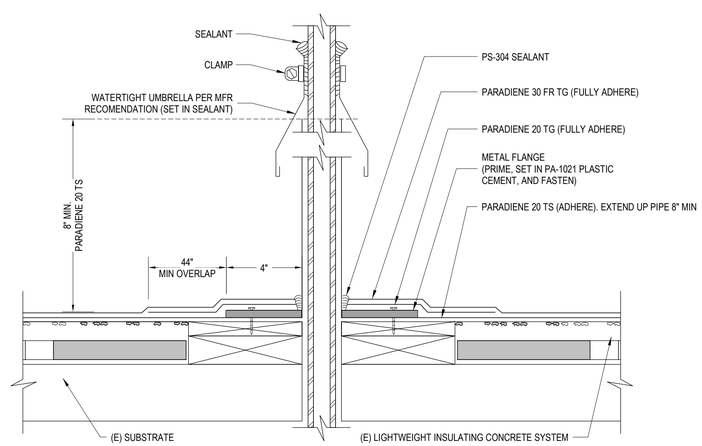

6 / A-500 PIPE/ CONDUIT PENETRATION @ ROOF TYPE 2

3" = 1'-0"

Stantec
801 S. Figueroa Street, Suite 300
Los Angeles, CA 90017

Copyright Reserved
The contractor shall verify and be responsible for all dimensions. DO NOT scale the drawing - any errors or omissions shall be reported to Stantec without delay.
This drawing is the property and copyright of Stantec and must not be copied, reproduced, transmitted, stored in a retrieval system or used in any way for any purpose other than that authorized by Stantec is prohibited.

REVISION	DESCRIPTION	DATE
1	90% CONSTRUCTION DRAWING SUBMITTAL	12/07/2023
2	90% UPDATED CONSTRUCTION SUBMITTAL	02/13/2024
3	100% CONSTRUCTION DRAWING SUBMITTAL	03/18/2024
	100% RESUBMITTAL	5/13/2024

REPLACEMENT OF MECHANICAL UNITS AT SANTA ANA BUS BASE
4301 W MacArthur Blvd, Santa Ana, CA 92704

DETAILS

JOB #:	
DESIGN BY:	Designer
DRAWN BY:	Author
CHECKED BY:	Checker
DATE:	
SCALE:	As indicated
SHEET:	A-500W

ORANGE COUNTY TRANSPORTATION AUTHORITY
550 SOUTH MAIN STREET, ORANGE, CA

IFB 4-2550 EXHIBIT B

(HVAC)

*__NOTE:__ ALL DUCT SIZES ARE INTERIOR, FREE DIMENSIONS ALWAYS WIDTH (HORIZONTAL DIM.) x HEIGHT (VERTICAL DIM.)

	AIR FLOW ARROW
18"x12" / 18"x12"	RECTANGULAR DUCT AND SIZE*
18"ø / 18"ø	ROUND DUCT AND SIZE*
18"x12"ø / 18"x12"ø	FLAT OVAL DUCT AND SIZE*
18"x12"	EXTERIOR DUCT TREATMENT*
18"x12" / 18"x12"	RECTANGULAR DUCT WITH ACOUSTIC LINING*
30"x12"	DUCT SECTION, SUPPLY AIR. APPLIES TO RECT., ROUND AND OVAL
	DUCT SECTION, OUTSIDE AIR. APPLIES TO RECT., ROUND AND OVAL
	DUCT SECTION, RETURN AIR. APPLIES TO RECT., ROUND AND OVAL
	DUCT SECTION, EXHAUST AIR. APPLIES TO RECT., ROUND AND OVAL
	FLEXIBLE DUCT
	ELBOW TURN, SUPPLY DOWN. APPLIES TO RECT., ROUND AND OVAL
	DUCT SECTION, OUTSIDE AIR. APPLIES TO RECT., ROUND AND OVAL
	DUCT SECTION, OUTSIDE AIR. APPLIES TO RECT., ROUND AND OVAL
	DUCT SECTION, OUTSIDE AIR. APPLIES TO RECT., ROUND AND OVAL
UP	CHANGE IN DUCT ELEVATION RISING IN DIRECTION INDICATED
DN	CHANGE IN DUCT ELEVATION DROPPING IN DIRECTION INDICATED
	END CAP
	ELBOW, RECTANGULAR, SMOOTH RADIUS WITH SPLITTER VANES (0.25 R/W DEFAULT)
	ELBOW, RECTANGULAR, SMOOTH RADIUS WITHOUT VANES (1.5 R/W DEFAULT)
	ELBOW, ROUND, SMOOTH RADIUS (1.5 R/W DEFAULT)
	MITERED ELBOW, RECTANGULAR, WITHOUT VANES
	MITERED ELBOW, RECTANGULAR, WITH TURNING VANES
	RECTANGULAR TO ROUND TRANSITION
	DUCT ACCESS DOOR (TOP, SIDE, BOTTOM)
	FLEXIBLE CONNECTION
BDD	BACKDRAFT DAMPER
COD	CABLE OPERATED DAMPER
	MANUAL DAMPER
M	MOTORIZED DAMPER
CAR	PRESSURE INDEPENDENT REGULATOR
	FIRE DAMPER
	SMOKE DAMPER
	SMOKE AND FIRE DAMPER
	DUCT SILENCER/TRANSFER ELBOW
T	CONTROL DEVICE (REFER TO CONTROLS LEGEND)
	AIR FLOW MEASURING STATION (REFER TO CONTROLS LEGEND)
QUANTITY / TYPE / SIZE (IN.) / VOLUME (CFM)	AIR OUTLET OR INLET TAG)REFER TO SCHEDULE)
	RECTANGULAR DIFFUSER, SUPPLY. OPTIONAL ARROWS SHOW THE FLOW DIRECTION.
	RECTANGULAR REGISTER OR GRILLE, RETURN
	RECTANGULAR REGISTER OR GRILLE, EXHAUST
	ROUND DIFFUSER, SUPPLY
	LINEAR DIFFUSER
	SIDEWALL REGISTER OR GRILLE, SUPPLY
	SIDEWALL GRILLE, RETURN OR EXHAUST
UC	UNDERCUT DOOR
	DOOR GRILLE OR LOUVER
	TRANSFER GRILLE OR LOUVER
	COIL (REFER TO CONTROLS LEGEND)
QUANTITY / TYPE / LENGTH (FT.) / CAPACITY (MBH)	RADIATION HEATING TAG (REFER TO SCHEDULE)

NOTE: NOT ALL SYMBOLS, SYSTEMS, AND ABBREVIATIONS MAY BE USED ON THIS PROJECT

(HVAC)

- EXHAUST FAN
- SUPPLY FAN
- EXHAUST FAN
- ROOFTOP UNIT
- MAKEUP AIR UNIT
- PACKAGED AIR CONDITIONER
- PACKAGED HEAT PUMP

WORK DEFINITION

	NEW WORK (N)
	EXISTING (E)
	REMOVE EXISTING (D)
###	KEY NOTE
###	EQUIPMENT IDENTIFICATION
	CONNECTION TO EXISTING
	DISCONNECT (CUT AND CAP)
	POINT OF DEMOLITION

ABBREVIATIONS

A/C	AIR CONDITIONING UNIT
AAV	AUTOMATIC AIR VENT
ADA	AMERICANS WITH DISABILITIES ACT
ADJ	ADJUSTABLE
AFC	ABOVE FINISHED CEILING
AFF	ABOVE FINISHED FLOOR
AFG	ABOVE FINISHED GRADE
AFR	ABOVE FINISH ROOF
AHJ	AUTHORITY HAVING JURISDICTION
AP	ACCESS PANEL
APD	AIR PRESSURE DROP
AVG	AVERGAGE
BAS	BUILDING AUTOMATION SYSTEM
BDD	BACKDRAFT DAMPER
BHP	BRAKE HORSEPOWER
BMS	BUILDING MANAGEMENT SYSTEM
BOD	BOTTOM OF DUCT
BOP	BOTTOM OF PIPE
BTU	BRITISH THERMAL UNIT
BTUH	BRITISH THERMAL UNIT PER HOUR
C/W	COMPLETE WITH
CAV	CONSTANT AIR VOLUME
CBV	CIRCUIT BALANCING VALVE
CFM	CUBIC FEET PER MINUTE
DB	DRY BULB TEMEPRATURE
dB	DECIBEL(S)
dBA	A-WEIGHTED DECIBLES
DDC	DIRECT DIGITAL CONTROL
DEG	DEGREE
DIA./Ø	DIAMETER
DIFF	DIFFERENTIAL
DIV	DIVISION
DN	DOWN
DWG	DRAWING
EA	EXHAUST AIR
EA (D)	EXHAUST AIR, DISHWASH
EA (G)	EXHAUST AIR, GENERAL
EA (K)	EXHAUST AIR, KITCHEN
EA (LAB)	EXHAUST AIR, LABORATORY
EA (LD)	EXHAUST AIR, LAUNDRY/DRYER
EA (W)	EXHAUST AIR, WASHROOM
EAT	ENTERING AIR TEMPERATURE
EAV	EXHAUST AIR VALVE
ECM	ELECTRONICALLY COMMUNICATED MOTOR
ED	EXISTING TO BE DEMOLISHED (DEMOLITION PLANS)
EER	ENERGY EFFICIENCY RATIO
EG	ETHELYENE GLYCOL
EMCS	ENERGY MANAGMENT CONTROL SYSTEM
ER	EXISTING RELOCATED (NEW CONSTRUCTION PLANS)
ERL	EXISTING TO BE RELOCATED (DEMOLITION PLANS)
ESP	EXTERNAL STATIC PRESSURE
EWT	ENTERING WATER TEMPERATURE
EXIST / E	EXISTING (DEMOLITION PLANS)
FC	FAIL CLOSED
FLA	FULL LOAD AMPERAGE
FO	FAIL OPEN
FP	FIRE PROTECTION
FPM	FEET PER MINUTE
FPS	FEET PER SECOND
FT	FOOT/FEET
GA	GAUGE
GAL	GALLON (US)
GC	GENERAL CONTRACTOR
GEO	GEODETIC
GPM	GALLONS PER MINUTE
HEPA	HIGH EFFICIENCY PARTICULATE AIR (FILTER)
HP	HORSEPOWER
HR	HOUR
HVAC	HEATING / VENTILATING / AIR CONDITIONING
HZ	HERTZ
IE	INVERT ELEVATION
IEER	INTEGRATED ENERGY EFFECIENCY RATIO
IN	INCHES
IN WG	INCHES WATER GAUGE
IPLV	INTEGRATED PART LOAD VALUE
kW	KILOWATT
kWh	KILOWATT HOUR
LAT	LEAVING AIR TEMPERATURE
LBS	POUNDS
LF	LINEAR FEET
LWT	LEAVING WATER TEMPERATURE
M	METER
MAX	MAXIMUM
MBH	THOUSAND OF BTUH
MCA	MINIMUM CIRCUIT AMPS
MERV	MINIMUM EFFECIENCY REPORTING VALUES
MFR	MANUFACTURER
MIN	MINIMUM
MOP	MAXIMUM OVERCURRENT PROTECTION
MWT	MEAN WATER TEMPERATURE
N/A	NOT APPLICABLE
NC	NOISE CRITERIA
NC	NORMALLY CLOSED
NIC	NOT IN CONTRACT
NO	NORMALLY OPEN
NPS	NOMINAL PIPE SIZE
NTS	NOT TO SCALE
OA	OUTSIDE AIR
OFCI	OWNER FURNISHED, CONTRACTOR INSTALLED
OFE	OWNER FURNISHED EQUIPMENT
OFOI	OWNER FURNISHED / OWNER INSTALLED
PG	PROPYLENE GLYCOL
POE	POINT OF ENTRANCE
POS	POINT OF SERVICE
PPM	PARTS PER MILLION
PSI	POUNDS PER SQUARE INCH
PSIA	POUNDS PER SQUARE INCH, ABSOLUTE
PSIG	POUNDS PER SQUARE INCH, GAGE
PTS	PNEUMATIC TUBE STATION

ABBREVIATIONS

PVC	POLYVINYL CHLORIDE
RA	RETURN AIR
RELA	RELIEF AIR
REQD	REQUIRED
RH	RELATIVE HUMIDITY
RPM	REVOLUTIONS PER MINUTE
SA	SUPPLY AIR
SEER	SEASONAL ENERGY EFFICIENCY RATION
SP	STATIC PRESSURE
SP	STAIR PRESSURIZATION AIR (*)
SRV	SAFETY RELIEF VALVE
TA	TRANSFER AIR
TEMP	TEMPERATURE
TSP	TOTAL STATIC PRESSURE
TSTAT	THERMOSTAT
TYP	TYPICAL
UC	UNDER CUT (DOOR)
UG	UNDERGROUND
UP	UP
VAV	VARIABLE AIR VOLUME
VFD	VARIABLE FREQUENCY DRIVE
VIF	VERIFY IN FIELD
VTR	VENT-THRU-ROOF
W/	WITH
W/O	WITHOUT
WB	WET BULB TEMPERATURE
WG	WATER GAUGE
ZN-#	ZONE
°C	CELSIUS
°F	FAHRENHEIT

EQUIPMENT IDENTIFICATION

AB-#	AIR BLENDER
AC-#	AIR COMPRESSOR
ACU-#	AIR CONDITIONING UNIT
ADS-#	AIR AND DIRT SEPARATOR
AF-#	AIR FILTER
AHU-#	AIR HANDLING UNIT
AS-#	AIR SEPARATOR
ATU-#	AIR TERMINAL UNIT
B-#	BOILER
BCU-#	BLOWER COIL UNIT
BT-#	BATH TUB
CB-#	CHILLED BEAM
CC-#	COOLING COIL
CH-#	CHILLER
CONV-#	CONVECTOR
CRU-#	CONDENSATE RETURN UNIT
CT-#	COOLING TOWER
CU-#	CONDENSING UNIT
CUH-#	CABINET UNIT HEATER
CV-#	CONTROL VALVE
DAC-#	DOOR AIR CURTAIN
DC-#	DUST COLLECTOR
DCT-#	DECONTAMINATION TANK
DCVA-#	DOUBLE CHECK VALVE ASSEMBLY
DF-#	DRINKING FOUNTAIN
DG-#	DOOR GRILLE
DS-#	DUCT SILENCER
DU-#	DEHUMIDIFICATION UNIT
DWH-#	DOMESTIC WATER HEATER
E-#	EXHAUST GRILLE / REGISTER / DIFFUSER
EL-#	EXPANSION LOOP
ERC-#	ENERGY RECOVERY COIL
ERU-#	ENERGY RECOVERY UNIT
ES-#	EMERGENCY SHOWER
ETU-#	EXHAUST TERMINAL UNIT
EWC-#	ELECTRIC WATER COOLER
EWS-#	EYE WASH STATION
F(C)-#	FAN CEILING
F(E)-#	FAN EXHAUST
F(LE)-#	FAN LABORATORY EXHAUST
F(R)-#	FAN RETURN
F(S)-#	FAN SUPPLY
F(T)-#	FAN TRANSFER
F-#	FAN
FCU-#	FAN COIL UNIT
FD-#	FLOOR DRAIN
FFU-#	FAN FILTER UNIT
FPP-#	FIRE PROTECTION PUMP
FPTU-#	FAN POWERED TERMINAL UNIT
FTR-#	FINNED TUBE RADIATOR
FUR-#	FURNACE
GFS-#	GLYCOL FEED SYSTEM
GSG-#	GAS-FIRED STEAM GENERATOR(*)
H(C)-#	HOOD (CANOPY)
H(HC)-#	HOOD (HEAT AND CONDENSATE)
H(I)-#	HOOD (INTAKE)
H(K)-#	HOOD (KITCHEN)
H(R)-#	HOOD (RELIEF)
H(RH)-#	HOOD (RANGE)
H-#	HUMIDIFIER
HC-#	HEATING COIL
HP-#	HEAT PUMP
HRU-#	HEAT RECOVERY UNIT
HT-#	HYDROPNEUMATIC TANK
HX-#	HEAT EXCHANGER
LATU-#	LAB AIR TERMINAL UNIT
LAV-#	LAVATORY
MAC-#	MEDICAL AIR COMPRESSOR
MAU-#	MAKEUP AIR UNIT
MD-#	MOTORIZED DAMPER
MSK-#	MOP SINK
MV-#	MIXING VALVE
MVP-#	MEDICAL VACUUM PUMP
P-#	PUMP
PDU-#	POOL DEHUMIDIFICATION UNIT
PRV-#	PRESSURE REDUCING VALVE
PTAC-#	PACKAGED TERMINAL AIR CONDITIONER
R-#	RETURN AIR GRILLE / REGISTER / DIFFUSER
RD-#	ROOF DRAIN
RH-#	RANGE HOOD
RP-#	RADIANT PANEL
RPBP-#	REDUCED PRESSURE BACKFLOW PREVENTER
RTU-#	ROOFTOP UNIT
S-#	SUPPLY GRILLE / REGISTER / DIFFUSER
SH-#	SHOWER
SK-#	SINK
SPC-#	SOLAR PANEL COLLECTOR
SSF-#	SIDE STREAM FILTER
T(B)-#	TANK (BUFFER TANK)
T(E)-#	TANK (EXPANSION TANK)
T(H)-#	TANK (HYDRO PNEUMATIC TANK)
T(S)-#	TANK (STORAGE TANK)
T-#	TRANSFER AIR GRILLE
UH-#	UNIT HEATER
UR-#	URINAL
USG-#	UNFIRED STEAM GENERATOR
UV-#	UNIT VENTILATOR
VA-#	VALVE
VFD-#	VARIABLE FREQUENCY DRIVE
WC-#	WATER CLOSET
WS-#	WATER SOFTENER
L-#	LOUVER

LICENSED PROFESSIONAL ENGINEER SEVAK GALSTYAN M 39730 EXP. 12/31/25 MECHANICAL STATE OF CALIFORNIA

Stantec

801 S. Figueroa Street, Suite 300
Los Angeles, CA 90017

Copyright Reserved
The Contractor shall verify and be responsible for all dimensions. DO NOT scale the drawing - any errors or omissions shall be reported to Stantec without delay.
The Copyrights to all designs and drawings are the property of Stantec. Reproduction or use for any purpose other than that authorized by Stantec is forbidden.

REVISION	DESCRIPTION	DATE
	100% RESUBMITTAL	5/13/2024
	100% CONSTRUCTION DRAWING SUBMITTAL	3/27/2024
	90% UPDATED CONSTRUCTION SUBMITTAL	2/13/2024
	90% CONSTRUCTION DRAWING SUBMITTAL	12/07/2023

REPLACEMENT OF MECHANICAL UNITS AT SANTA ANA BUS BASE
4301 W. MAC ARTHUR BLVD., SANTA ANA, CA

MECHANICAL GENERAL NOTES, SYMBOLS AND ANNOTATIONS

JOB #:	
DESIGN BY:	SG
DRAWN BY:	RW
CHECKED BY:	GY
DATE:	
SCALE:	12" = 1'-0"
SHEET:	M-001W

OCTA
ORANGE COUNTY
TRANSPORTATION AUTHORITY
550 SOUTH MAIN STREET, ORANGE, CA

DEMO NOTES

1. NOT ALL EXISTING CONDITIONS HAVE BEEN SHOWN. CONTRACTOR TO FIELD VERIFY ALL EXISTING CONDITIONS PRIOR TO DEMO.
2. CONTRACTOR SHALL PROTECT ALL WORK AND EXISTING CONDITIONS ASSOCIATED WITH THIS CONTRACT FROM DAMAGE, COVER ENDS OF PIPING AND DUCTWORK NOT ACTIVELY BEING WORKED ON. IT IS THE CONTRACTOR RESPONSIBILITY TO REPAIR OR REPLACE ANY DAMAGED ITEMS THAT OCCURS DURING THIS CONSTRUCTION PROJECT AT NO COST TO THE OWNER.
3. REPLACE ALL REQUIRED EQUIPMENT, PIPING, HANGERS, CONTROLS AND ALL ASSOCIATED EXISTING SYSTEMS AS REQUIRED. TO REPLACE EACH SYSTEM, CONTRACTOR SHALL COORDINATE DEMOLITION WITH EXISTING SYSTEMS AND COMPONENTS TO REMAIN PRIOR TO WORK COMMENCING. EXISTING DUCTWORK IS TO REMAIN.
4. IT IS THE CONTRACTORS RESPONSIBILITY TO CLEAN UP ALL DEBRIS FROM SITE AT THE END OF EACH WORK DAY AND DISPOSE OFF EITHER IN LAY DOWN RECYCLE BINS PROVIDED BY THE CONTRACTOR OR OFFSITE ALL TOGETHER.
5. ALL DEMOLISHED EQUIPMENT SHALL BE TURNED OVER TO THE OWNER UNLESS DIRECTED OTHERWISE. IF OWNER IS NOT TO KEEP DEMOLISHED EQUIPMENT, DISPOSE AS REQUIRED.
6. THE CONTRACTOR SHALL VISIT THE SITE AND BE THOROUGHLY FAMILIARIZED WITH THE EXISTING CONDITIONS PRIOR TO BIDDING. INFORMATION GIVEN ON THESE DRAWINGS ABOUT THE EXISTING INSTALLATION HAS BEEN OBTAINED FROM THE EISTING AS-BUILT DRAWINGS BUT CANNOT BE GUARANTEED ACCURATE IN ALL RESPECTS. VERIFY ALL SUCH INFORMATION BEFORE PROCEEDING WITH ANY NEW WORK THAT MAY BE AFFECTED. INCLUDE AS PART OF THE CONTRACT AL WORK REQUIRED TO PRODUCE THE INDICATED RESULT.
7. UPON SUBMITTING A BID THE CONTRACTOR SHALL BE HELD TO HAVE MADE SUCH EXAMINATIONS OF THE SITE AND NO ALLOWANCE FOR EXTRAS WILL BE ALLOWED FOR ANY ERROR OR OVERSIGHT RESULTING FROM THE CONTRACTORS UNFAMILIARITY WITH THE SITE OR EXISTING CONDITIONS.
8. CONTRACTOR SHALL NOT SCALE DRAWINGS. DIMENSIONS MISSING FROM PLANS OR NEEDED FOR EXECUTION OF WORK SHALL BE CLARIFIED OR PROVIDED BY THE FACILITY REPRESENTATIVE BEFORE WORK IS INSTALLED.
9. INTERRUPTION OF EXISTING SERVICES: THE CONTRACTOR'S ATTENTION IS CALLED TO THE PRESENCE OF EXISTING, CONDUIT, PIPING, ETC. THE CONTRACTOR WILL BE HELD RESPONSIBLE FOR THE PROPER AND APPROVED REPAIR OF ANY AND ALL DAMAGE CAUSED BY HIM OR HIS WORK TO EXISTING BUILDING. ANY INTERRUPTIONS REQUIRED SHALL BE SCHEDULED TO MINIMIZE INCONVENIENCE TO THE FACILITY, AND AT TIMES AS APPROVED IN ADVANCE BY THE FACILITY REPRESENTATIVE. NEW WORK AND ISNTALLATIONS SHALL BOT IMPAIR THE PROPER FUNCTIONING OF THE EXISTING FACILITY. THE COMPLETED PROJECT SHALL BE A PROPERLY FUNCTIONING ENTITY THROUGHOUT. FURNISH ALL LABOR AND MATERIALS REQUIRED TO RELOCATE, REMOVE, REINSTALL, RECONNECT REPLACE, ETC. ANY EXISTING PIPING TO ACCOMMODATE THE WORK. CONTRACTOR SHOULD CONSIDER IN HIS BID ANY EXTRA WORK REQUIRED TO MINIMIZE SHUTDOWN TIME.
10. BEFORE DEMOLITION COMMENCES ON SITE, ALL EXISTING EQUIPMENT TO BE RETAINED AND REUSED WILL BE SURVEYED AND VALIDATED BY THE CONTRACTOR TO ESTABLISH CONDITION AND CAPACITIES. ANY EXISTING DAMAGE TO EQUIPMENT IS TO BE RECORDED AT THIS STAGE BY THE CONTRACTOR AND A FULL WRITTEN REPORT SUBMITED TO THE FACILITY REPRESENTATIVE FOR REVIEW. THE REPORT WILL INCLUDE PHOTOGRAPHIC EVIDENCE OF DAMAGE.
11. CONTRACTOR TO CROSS REFERENCE DEMOLITION AND NEW CONSTRUCTION DRAWINGS TO ENSURE CONSISTENCY IN DESIGN INTENT BEFORE PROCEEDING WITH ANY DEMOLITION WORK. ANY PIPE, VALVE, EQUIPMENT THAT IS MISTAKENLY DEMOLISHED SHALL BE RESTORED AT CONTRACTORS COST.
12. ALL POWER SUPPLIES TO EXISTING EQUIPMENT TO BE REMOVED SHALL BE ISOLATED AND MADE SAFE PER NEX PRIOR TO DEMOLITION STARTS. THIS PROCESS SHALL BE COORDINATED WITH FACILITY REPRESENTATIVES.
13. CONTRACTOR TO DO PRE-DEMOLITION SURVEY AND RED TAG UTILITIES FOR DEMOLITION. COORDIANTE WITH FACILITY REPRESENTATIVE ALL PROPOSED UTILITY SHUT DOWN AND ISOLATION PRIOR TO DEMOLITION.

APPLICABLE CODES AND DESIGN CONDITIONS

1. AMERICANS WITH DISABILITIES ACT (ADA).
2. NFPA 90A; STANDARD FOR THE INSTALLATION OF AIR-CONDITIONING AND VENTILATING SYSTEMS.
3. NFPA 90B: STANDARD FOR THE INSTALLATION OF WARM AIR HEATING AND AIR-CONDITIONING SYSTEMS.
4. NFPA 101: LIFE SAFETY CODE
5. ASHRAE 55 THERMAL ENVIRONMENTAL CONDITIONS FOR HUMAN OCCUPANCY.
6. ASHRAE 62.1 VENTILATION FOR ACCEPTABLE INDOOR AIR QUALITY.
8. 2022 CALIFORNIA MECHANICAL CODE
9. 2022 CALIFORNIA PLUMBING CODE
10. 2022 NATIONAL ELECTRICAL CODE
11. 2022 TITLE 24 REQUIREMENTS
12. CALGREEN STANDARDS

OUTDOOR DESIGN CONDITIONS:

LOCATION:
SUMMER: 98DB, 70WB
WINTER: 35DB
ELEVATION: 115 FEET

GENERAL NOTES

1. THE MECHANICAL PLANS ARE DIAGRAMMATIC IN NATURE AND ARE BASED ON ONE MANUFACTURER'S EQUIPMENT. THEY ARE NOT INTENDED TO SHOW EVERY ITEM IN ITS EXACT LOCATION. THE EXACT DIMENSIONS, OR ALL OF THE DETAILS FOR THE EQUIPMENT. THE MECHANICAL CONTRACTOR SHALL VERIFY THE ACTUAL DIMENSIONS OF THE EQUIPMENT AND ENSURE THAT IT WILL FIT IN THE AVAILABLE SPACE.
2. MECHANICAL CONTRACTOR RESPONSIBLE FOR INSTALLATION OF COMPLETED AND OPERATIONAL SYSTEMS WITH DUE RESPECT TO ALL APPLICABLE CODES AND AUTHORITIES HAVING JURISDICTION.
3. IT IS THE CONTRACTOR RESPONSIBILITY TO FIELD VERIFY ALL CONNECTION POINTS PRIOR TO INSTALL. NOT ALL CONNECTION SIZES ARE SHOWN, BUT THOSE THAT ARE APPROXIMATE AND TAKEN FROM EXISTING AS-BUILTS AND FIELD OBSERVATIONS.
4. COORDINATE PIPE ROUTING WITH DUCTWORK, SPRINKLER PIPING AND ELECTRICAL POWER/LIGHTING CIRCUITING AND STRUCTURAL MEMBERS PRIOR TO INSTALLATION.
5. CONTRACTORS TO VERIFY ALL GRADES, DIMENSIONS AND EXISTING CONDITIONS AT THE SITE BEFORE PROCEEDING WITH WORK. NOTIFY PRIME CONSULTANT OF ANY DISCREPANCIES BETWEEN DRAWINGS AND ACTUAL CONDITIONS BEFORE INSTALLATION.
6. ALL MECHANICAL EQUIPMENT CONTROLS SHALL MATCH TO WHAT IS EXISTING AT THE OCTA SANTA ANA BUS FACILITY.
7. COORDINATE INSTALLATION OF PIPING AND DUCTWORK WITH ELECTRICAL CONTRACTOR AND OTHER TRADES.
8. IF THERE IS A CONFLICT BETWEEN THE CONSTRUCTION DOCUMENTS AND SPECIFICATIONS, THE MOST STRINGENT WILL APPLY.
9. ALL EQUIPMENT SHALL BE INSTALLED IN STRICT ACCORDANCE WITH THE EQUIPMENT MANUFACTURERS. CONTRACTOR TO PROVIDE ALL FITTINGS, TRANSITIONS, DAMPERS, VALVES, AND OTHER DEVICES REQUIRED FOR A COMPLETE WORKABLE INSTALLATION.
10. PENETRATIONS OF DUCTS, PIPES, CONDUITS,ETC IN WALLS REQUIRING PROTECTED OPENINGS SHALL BE FIRE STOPPED, FIRE STOP MATERIAL, SHALL BE A UL/ULC-LISTED ASSEMBLY APPROPRIATE FOR FIRE OR SMOKE PENETRATIONS AS APPLICABLE AND AS APPROVED BY THE FIRE MARSHAL.
11. THE MECHANICAL CONTRACTOR SHALL PROVIDE AND INSTALL FIRE, SMOKE, OR COMBINATION SMOKE/FIRE DAMPERS AND ACCESS PANELS COMMENSURATE WITH THE RATING OF THE WALL IN ALL DUCTWORK THAT PENETRATES FIRE WALLS, FIRE BARRIERS, FIRE PARTITIONS, SMOKE BARRIERS AND SMOKE PARTITION IN ALL DUCTWORK THAT PENETRATES A HORIZONTAL OR VERTICAL FIRE PARTITION, OR AS OTHERWISE SHOWN ON THE DRAWINGS.
12. ALL BRANCH DUCTS SHALL HAVE VOLUME DAMPERS.
13. WHERE FLOW EXCEEDS 150 CFM, THE CONTRACTOR SHALL USE SMOOTH RADIUS ELBOWS OR TURNING VANES.
14. ALL DUCT JOINTS SHALL BE SEALED IN ACCORDANCE WITH SMACNA STANDARDS.
15. ALL DUCT DIMENSIONS ARE NET INSIDE VALUES. DIMENSIONS MAY BE CHANGED PROVIDED THAT THE NET FREE AREA IS MAINTAINED.
16. ALL CONCEALED DUCTWORK SHALL BE INSULATED WITH 1" FIBERGLASS INSULATING BLANKET WITH ALUMINUM FOIL FACING.
17. ALL DUCTWORK SHALL BE CONSTRUCTED, ERECTED AND TESTED IN ACCORDANCE WITH THE LOCAL REGULATIONS AND PROCEDURES DETAILED IN THE APPLICABLE STANDARDS ADOPTED BY THE SHEET METAL AND AIR CONDITIONING CONTRACTORS NATIONAL ASSOCIATION. (SMACNA).
18. ALL PIPE SHALL BE SUPPORTED FROM THE BUILDING STRUCTURE IN A NEAT AND WORKMANLIKE MANNER. THE USE OF WIRE OR METAL STRAPS TO SUPPORT PIPES WILL NOT BE PERMITTED. REFER TO SPECIFICATIONS FOR MINUMUM SPACING OF PIPE SUPPORTS.
19. THE HVAC SYSTEMS SHALL BE TESTED AND BALANCED BY AN INDEPENDENT AGENCY, UNDER THE SUPERVISION OF A LICENSED PROFESSIONAL ENGINEER. A SEALED TYPE WRITTEN REPORT SHALL BE SUBMITTED TO THE ARCHITECT/ENGINEER.
20. ALL EQUIPMENT, DUCTS PIPING, AND OTHER DEVICES AND MATERIALS INSTALLED OUTSIDE OF THE BUILDING OR OTHERWISE EXPOSED TO THE WEATHER SHALL BE COMPLETELY WEATHERPROOFED.
21. MECHANICAL EQUIPMENT, DUCTS AND PIPING ARE TO BE COORDINATED WITH STRUCTURAL JOISTS AND CROSS BRACING.
22. ALL EXPOSED PIPING IN OCCUPIED SPACES SUBJECT TO ARCHITECTURAL APPROVAL PRIOR TO INSTALLATION.

LICENSED PROFESSIONAL ENGINEER
SIYAR GALSTYAN
M-39730
EXP. 12/31/25
MECHANICAL
STATE OF CALIFORNIA

Stantec
801 S. Figueroa Street, Suite 300
Los Angeles, CA 90017

Copyright Reserved
This Contract or shall not be responsible for all dimensions. DO NOT SCALE THE DRAWING - in the event or omission shall be reported to Stantec without delay.
This drawing is the property of Stantec and shall not be reproduced in whole or in part. Reproduction or use for any purpose other than that authorized by Stantec is forbidden.

REVISION	DESCRIPTION	DATE
	100% RESUBMITTAL	5/13/2024
	100% CONSTRUCTION DRAWING SUBMITTAL	3/27/2024
	90% UPDATED CONSTRUCTION SUBMITTAL	2/13/2024
	90% CONSTRUCTION DRAWING SUBMITTAL	12/07/2023

REPLACEMENT OF MECHANICAL UNITS AT SANTA ANA BUS BASE
4301 W. MAC ARTHUR BLVD., SANTA ANA, CA

PROJECT NOTES AND SHEET INDEX

JOB #:	
DESIGN BY:	SG
DRAWN BY:	RW
CHECKED BY:	GY
DATE:	
SCALE:	12" = 1'-0"
SHEET:	M-002W

OCTA
ORANGE COUNTY TRANSPORTATION AUTHORITY
550 SOUTH MAIN STREET, ORANGE, CA

Autodesk Docs://2014233703_Santa_Ana_Bus/mech_SantaAnaBus_2014233703.rvt
5/8/2024 11:15:01 AM

IFB 4-2550 EXHIBIT B

FAN SCHEDULE

UNIT IDENTIFICATION				APPLICATION	MAX AIRFLOW (CFM)	MIN AIRFLOW (CFM)	ESP (IN-WG)	DRIVE TYPE	FAN WHEEL			FAN MOTOR				ELECTRICAL				OPERATING WEIGHT (LBS.)	CURB ADAPTER REQUIRED	EXISTING CURB SIZE	NEW CURB SIZE	MANUFACTURER	MODEL NUMBER	NOTES
MARK	NUMBER	BUILDING	UNIT/AREA SERVED						TYPE	ARRANGEMENT	SPEED (RPM)	BHP	HP	SPEED (RPM)	DRIVE TYPE	V / PH	FLA	MCA	MOP							
EF	4-1	OREPATIONS	OPER BLDG REST RM	EXHAUST	540	-	0.5	ECM	CENTRIFUGAL	UPBLAST	1,300	0.10	1/4	1,725	DIRECT	115 / 1	2.9	4.00	15	45	N	-	-	GREENHECK	CUE-099-VG	1-6, 9
EF	4-2	OPERATIONS	OPER BLDG MEN'S RM	EXHAUST	1,100	-	0.5	ECM	CENTRIFUGAL	UPBLAST	1,690	0.27	1/4	1,725	DIRECT	115 / 1	3.5	4.00	15	54	N	-	-	GREENHECK	CUE-100-VG	1-6, 9
EF	4-3	OPERATIONS	OPER BLDG ELEC RM 103	EXHAUST	700	-	0.5	ECM	CENTRIFUGAL	UPBLAST	1,330	0.13	1/4	1,725	DIRECT	115 / 1	3.5	4.00	15	54	N	-	-	GREENHECK	CUE-100-VG	1-6, 9
EF	4-4	OPERATIONS	OPER BLDG LOCKER	EXHAUST	320	-	0.5	ECM	CENTRIFUGAL	UPBLAST	1,525	0.08	1/10	1,725	DIRECT	115 / 1	1.5	2.00	15	34	N	-	-	GREENHECK	CUE-090-VG	1-6, 9
SF	4-1	OPERATIONS	ELEC RM 103	SUPPLY	700	-	0.37	ECM	CENTRIFUGAL	ROOF SUPPLY	681	0.10	1/4	1,725	BELT	115 / 1	5.8	7.25	15	175	N	-	-	GREENHECK	RSF-90-4	1-6, 8
EF	5-1	MAINTENANCE	RUNNING REPAIR RM 181	EXHAUST	40,000	20,000	1.0	VFD	CENTRIFUGAL	UPBLAST	951	hh	25	1,725	BELT	460 / 3	34.0	42.50	70	2,350	Y	72 x 72	66 x 66	GREENHECK	QEI-40	1-6, 7
EF	5-2	MAINTENANCE	RM 181	EXHAUST	30,000	15,000	1.0	VFD	CENTRIFUGAL	UPBLAST	969	14.11	15	1,725	BELT	460 / 3	21.0	26.20	45	1,880	Y	64 x 64	60 x 60	GREENHECK	QEI-36	1-6, 7
EF	5-3	MAINTENANCE	RM 178	EXHAUST	28,000	14,000	1.0	VFD	CENTRIFUGAL	UPBLAST	916	12.10	15	1,725	BELT	460 / 3	21.0	26.20	45	1,880	Y	64 x 64	60 x 60	GREENHECK	QEI-36	1-6, 7
EF	5-4	MAINTENANCE	RM 178	EXHAUST	28,000	14,000	1.0	VFD	CENTRIFUGAL	UPBLAST	916	12.10	15	1,725	BELT	460 / 3	21.0	26.20	45	1,880	Y	64 x 64	60 x 60	GREENHECK	QEI-36	1-6, 7
EF	5-5	MAINTENANCE	RM 178	EXHAUST	30,000	15,000	1.0	VFD	CENTRIFUGAL	UPBLAST	969	14.11	15	1,725	BELT	460 / 3	21.0	26.20	45	1,880	Y	64 x 64	60 x 60	GREENHECK	QEI-36	1-6, 7
EF	5-6	MAINTENANCE	STEAM CLEANER	EXHAUST	10,000	5,000	1.0	VFD	CENTRIFUGAL	UPBLAST	1,433	4.16	5	1,725	BELT	460 / 3	7.6	9.50	15	617	Y	40 x 40	38.5 x 38.5	GREENHECK	QEI-22	1-6, 7
EF	5-7	MAINTENANCE	PARTS RM 135	EXHAUST	5,950	-	0.5	VFD	CENTRIFUGAL	UPBLAST	888	1.75	2	1,725	BELT	460 / 3	3.4	4.25	15	165	N	-	-	GREENHECK	CUBE-220-20	1-6, 9
EF	5-8	MAINTENANCE	PARTS RM 135	EXHAUST	5,950	-	0.5	VFD	CENTRIFUGAL	UPBLAST	888	1.75	2	1,725	BELT	460 / 3	3.4	4.25	15	165	N	-	-	GREENHECK	CUBE-220-20	1-6, 9
EF	5-9	MAINTENANCE	PARTS RM 135	EXHAUST	5,950	-	0.5	VFD	CENTRIFUGAL	UPBLAST	888	1.75	2	1,725	BELT	460 / 3	3.4	4.25	15	165	N	-	-	GREENHECK	CUBE-220-20	1-6, 9
EF	5-10	MAINTENANCE	PARTS RM 135	EXHAUST	5,950	-	0.5	VFD	CENTRIFUGAL	UPBLAST	888	1.75	2	1,725	BELT	460 / 3	3.4	4.25	15	165	N	-	-	GREENHECK	CUBE-220-20	1-6, 9
EF	5-11	MAINTENANCE	JAN RM 219	EXHAUST	80	-	0.3	ECM	CENTRIFUGAL	UPBLAST	1,453	0.02	1/15	1,725	DIRECT	115 / 1	1.3	2.00	15	28	N	-	-	GREENHECK	CUE-060-VG	1-6, 9
(E) EF	*5-12*	MAINTENANCE	*MEN'S RM 214, WOMEN 213*	*EXHAUST*	*500*	-	*EXISTING TO REMAIN*														*N*	-	-	*DAYTON*	*5DVP0*	10
EF	5-13	MAINTENANCE	MEN'S RM 109	EXHAUST	750	-	0.6	ECM	CENTRIFUGAL	UPBLAST	1,435	0.16	1/4	1,725	DIRECT	115 / 1	3.5	4.00	15	54	N	-	-	GREENHECK	CUE-100-VG	1-6, 9
(E) EF	*5-14*	MAINTENANCE	*WOMEN/SH RM 115*	*EXHAUST*	*660*	-	*EXISTING TO REMAIN*														*N*	-	-	*DAYTON*	*20FT11*	10
(E) EF	*5-15*	MAINTENANCE	*JAN RM 114*	*EXHAUST*	*315*	-	*EXISTING TO REMAIN*														*N*	-	-	*DAYTON*	*5DVP0*	10
EF	5-16	MAINTENANCE	REBUILT RM 106	EXHAUST	6,200	3,100	0.5	VFD	CENTRIFUGAL	UPBLAST	838	1.60	2	1,725	BELT	460 / 3	3.4	4.25	15	165	N	-	-	GREENHECK	CUBE-240-20	1-6, 9
EF	5-17	MAINTENANCE	REBUILT RM 107	EXHAUST	6,200	3,100	0.5	VFD	CENTRIFUGAL	UPBLAST	838	1.60	2	1,725	BELT	460 / 3	3.4	4.25	15	165	N	-	-	GREENHECK	CUBE-240-20	1-6, 9
EF	5-18	MAINTENANCE	REBUILT RM 108	EXHAUST	6,200	3,100	0.5	VFD	CENTRIFUGAL	UPBLAST	838	1.60	2	1,725	BELT	460 / 3	3.4	4.25	15	165	N	-	-	GREENHECK	CUBE-240-20	1-6, 9
EF	5-19	MAINTENANCE	BREAK RM 121	EXHAUST	3,500	-	0.5	VFD	CENTRIFUGAL	UPBLAST	968	1.11	1 1/2	1,725	BELT	460 / 3	3.0	3.75	15	140	N	-	-	GREENHECK	CUBE-200-15	1-6, 9
EF	5-20	MAINTENANCE	CLEAN SHOP 141	EXHAUST	2,600	-	0.5	VFD	CENTRIFUGAL	UPBLAST	1,635	0.87	1	1,725	BELT	460 / 3	2.1	2.63	15	97	N	-	-	GREENHECK	CUBE-140-10	1-6, 9
EF	5-21	MAINTENANCE	MACHINE RM 144	EXHAUST	3,100	-	0.5	VFD	CENTRIFUGAL	UPBLAST	1,053	0.78	1	1,725	BELT	460 / 3	2.1	2.63	15	132	N	-	-	GREENHECK	CUBE-180-10	1-6, 9
EF	5-22	MAINTENANCE	MACHINE RM 145	EXHAUST	3,100	-	0.5	VFD	CENTRIFUGAL	UPBLAST	1,053	0.78	1	1,725	BELT	460 / 3	2.1	2.63	15	132	N	-	-	GREENHECK	CUBE-180-10	1-6, 9
(E) EF	*5-23*	MAINTENANCE	*COMP REP RM 143*	*EXHAUST*	*1,200*	-	*EXISTING TO REMAIN*														*N*	-	-	*DAYTON*	-	10
EF	5-24	MAINTENANCE	BLDG MAINT. RM 150	EXHAUST	2,330	-	0.5	ECM	CENTRIFUGAL	UPBLAST	1,501	0.64	3/4	1,725	DIRECT	115 / 1	8.8	11.00	15	76	N	-	-	GREENHECK	CUE-140-VG	1-6, 9
EF	5-25	MAINTENANCE	COMP EXCH. RM 148	EXHAUST	16,000	8,000	1.0	VFD	CENTRIFUGAL	UPBLAST	1,255	7.06	7 1/2	1,725	BELT	460 / 3	11.0	13.80	20	885	Y	46 x 46	46.5 x 46.5	GREENHECK	QEI-27	1-6, 7
EF	5-26	MAINTENANCE	REV. TOIL. RM 160/161	EXHAUST	300	-	0.5	ECM	CENTRIFUGAL	UPBLAST	1,621	0.10	1/10	1,725	DIRECT	115 / 3	1.5	2.00	15	34	N	-	-	GREENHECK	CUE-090-VG	1-6, 9
(E) EF	*5-27*	MAINTENANCE	*LOCKER RM 167*	*EXHAUST*	*140*	-	*EXISTING TO REMAIN*														*N*	-	-	*DAYTON*	*5DVN6*	10
EF	5-28	MAINTENANCE	BODY SHOP RM 174	EXHAUST	36,960	18,480	1.0	VFD	CENTRIFUGAL	UPBLAST	1,013	17.45	20	1,725	BELT	460 / 3	27.0	33.80	60	1,013	Y	64 x 64	64.5 x 64.5	GREENHECK	QEI-40	1-6, 7
EF	5-29	MAINTENANCE	STORAGE RM 155	EXHAUST	2,500	-	0.5	ECM	CENTRIFUGAL	UPBLAST	1,115	0.54	3/4	1,200	DIRECT	115 / 1	8.8	11.00	15	84	N	-	-	GREENHECK	CUE-160-VG	1-6
(E) EF	*5-30*	MAINTENANCE	*TEL RM 136*	*EXHAUST*	*285*	-	*EXISTING TO REMAIN*														*N*	-	-	*DAYTON*	*5DVP6*	10
EF	5-31	MAINTENANCE	ELEC RM 137	EXHAUST	3,000	-	0.65	ECM	CENTRIFUGAL	UPBLAST	1,406	1.07	2	1,725	DIRECT	460 / 3	3.2	4.00	15	119	N	-	-	GREENHECK	CUE-160-VG	1-6, 9
EF	5-32	MAINTENANCE	LUBE RM 138	EXHAUST	410	-	0.5	ECM	CENTRIFUGAL	UPBLAST	1,621	0.10	1/10	1,725	DIRECT	115 / 3	1.5	2.00	15	34	N	-	-	GREENHECK	CUE-090-VG	1-6, 9
EF	5-33	MAINTENANCE	C.A. RM 139	EXHAUST	6,500	-	1.0	VFD	CENTRIFUGAL	UPBLAST	1,185	2.78	3	1,725	BELT	460 / 3	4.8	6.00	15	203	N	-	-	GREENHECK	CUBE-240HP-30	1-6
EF	5-34	MAINTENANCE	ELEC RM 185	EXHAUST	2,850	-	0.5	ECM	CENTRIFUGAL	UPBLAST	1,312	0.87	2	1,725	DIRECT	460 / 3	3.2	4.00	15	119	N	-	-	GREENHECK	CUE-160-VG	1-6, 9
EF	5-35	MAINTENANCE	ELEC RM 184	EXHAUST	1,300	-	0.63	ECM	CENTRIFUGAL	UPBLAST	1,425	0.33	1/2	1,450	DIRECT	115 / 1	6.4	8.00	15	37	N	-	-	GREENHECK	CUE-130-VG	1-6, 9
(E) EF	*5-36*	MAINTENANCE	*ELEC RM 220*	*EXHAUST*	-	-	*EXISTING TO REMAIN*														*N*	-	-	*DAYTON*	*4HZ45G*	10
EF	5-37	MAINTENANCE	ENG. DYN. RM 103	EXHAUST	15,000	7,500	1.0	VFD	CENTRIFUGAL	UPBLAST	1,191	6.15	7 1/2	1,725	BELT	460 / 3	11.0	13.80	20	886	Y	46 x 46	46.5 x 46.5	GREENHECK	QEI-27	1-6, 9
EF	5-38	MAINTENANCE	TRAN DYN. RM 105	EXHAUST	850	-	0.5	ECM	CENTRIFUGAL	UPBLAST	1,448	0.17	1/4	1,725	DIRECT	115 / 1	3.5	4.00	15	54	N	-	-	GREENHECK	CUE-100-VG	1-6, 9
EF	5-39	MAINTENANCE	EQUIP. STOR. RM 129	EXHAUST	375	-	0.5	ECM	CENTRIFUGAL	UPBLAST	1,525	0.10	1/6	1,725	DIRECT	115 / 1	2.3	3.00	15	40	N	-	-	GREENHECK	CUE-095-VG	1-6, 9
EF	5-40	MAINTENANCE	LOADING ABY RM 170	EXHAUST	1,100	-	0.5	ECM	CENTRIFUGAL	UPBLAST	1,328	0.22	1/4	1,400	DIRECT	115 / 1	3.5	4.00	15	57	N	-	-	GREENHECK	CUE-120-VG	1-6, 9
EF	5-41	MAINTENANCE	UPHOLSTRY SHOP RM 151	EXHAUST	990	-	0.5	ECM	CENTRIFUGAL	UPBLAST	984	0.17	1/4	1,000	DIRECT	115 / 1	3.5	4.00	15	72	N	-	-	GREENHECK	CUE-140-VG	1-6, 9
EF	5-42	MAINTENANCE	FUEL RM 102	EXHAUST	650	-	1.0	ECM	CENTRIFUGAL	UPBLAST	1,633	0.18	1/4	1,770	DIRECT	115 / 1		7.25	15	95	N	-	-	GREENHECK	USF-8-VG	1-6, 9
(E) EF	*5-43*	MAINTENANCE	*PAINT BOOTH*	*EXHAUST*	-	-	*EXISTING TO REMAIN*														N	-	-	*NEW YORK BLOWER*	*PLR-33*	10
SF	5-1	MAINTENANCE	PARTS RM 135	SUPPLY	7,330	-	1.0	VFD	CENTRIFUGAL	ROOF SUPPLY	564	2.52	3	1,725	BELT	460 / 3	4.8	6.00	15	766	N	-	-	GREENHECK	RSF-200-30	1-6, 8
SF	5-2	MAINTENANCE	PARTS RM 135	SUPPLY	7,330	-	1.0	VFD	CENTRIFUGAL	ROOF SUPPLY	564	2.52	3	1,725	BELT	460 / 3	4.8	6.00	15	766	N	-	-	GREENHECK	RSF-200-30	1-6, 8
SF	5-3	MAINTENANCE	PARTS RM 135	SUPPLY	7,330	-	1.0	VFD	CENTRIFUGAL	ROOF SUPPLY	564	2.52	3	1,725	BELT	460 / 3	4.8	6.00	15	766	N	-	-	GREENHECK	RSF-200-30	1-6, 8
SF	5-4	MAINTENANCE	REBUILT RM 106	SUPPLY	9,200	-	1.0	VFD	CENTRIFUGAL	ROOF SUPPLY	605	3.87	5	1,725	BELT	460 / 3	7.6	9.50	15	783	N	-	-	GREENHECK	RSF-200-50	1-6, 8
SF	5-5	MAINTENANCE	BRAKE RM 121	SUPPLY	3,200	-	1.0	VFD	CENTRIFUGAL	ROOF SUPPLY	979	1.42	1.5	1,752	BELT	460 / 3	3.0	3.75	15	307	N	-	-	GREENHECK	RSF-120-15	1-6, 8
SF	5-6	MAINTENANCE	CLEAN SHOP RM 141	SUPPLY	2,400	-	1.0	VFD	CENTRIFUGAL	ROOF SUPPLY	896	0.86	1	1,725	BELT	460 / 3	2.1	2.63	15	302	Y	30 x 30	34 x 34	GREENHECK	RSF-120-10	1-6, 8
(E) SF	*5-7*	MAINTENANCE	*MECH SHOP RM 144*	*EXHAUST*	*3,000*	-	*EXISTING TO REMAIN*														*N*	-	-	*DAYTON*	*5AU56*	10
SF	5-8	MAINTENANCE	COMP. SHOP. RM 143	SUPPLY	1,300	-	1.0	VFD	CENTRIFUGAL	ROOF SUPPLY	1,274	0.57	3/4	1,725	BELT	460 / 3	1.6	2.00	15	199	N	-	-	GREENHECK	RSF-90-7	1-6, 8
SF	5-9	MAINTENANCE	BLDG MAINT. RM 150	SUPPLY	4,000	-	1.0	VFD	CENTRIFUGAL	ROOF SUPPLY	855	1.93	2	1,725	BELT	460 / 3	3.4	4.25	15	427	N	-	-	GREENHECK	RSF-150-20	1-6, 8
SF	5-10	MAINTENANCE	STORAGE RM 155	SUPPLY	2,500	-	1.0	VFD	CENTRIFUGAL	ROOF SUPPLY	905	0.92	1	1,725	BELT	460 / 3	2.1	2.63	15	302	Y	30 x 30	34 x 34	GREENHECK	RSF-120-10	1-6, 8
(E) SF	*5-11*	MAINTENANCE	*ELEC RM 137*	*EXHAUST*	*3,000*	-	*EXISTING TO REMAIN*														*N*	-	-	*DAYTON*	*SAU56*	10
SF	5-12	MAINTENANCE	ELEC RM 185	SUPPLY	850	-	0.5	VFD	CENTRIFUGAL	ROOF SUPPLY	844	0.18	1/2	1,725	BELT	460 / 3	1.1	1.38	15	194	N	-	-	GREENHECK	RSF-90-5	1-6, 8
SF	5-13	MAINTENANCE	ELEC RM 184	SUPPLY	1,200	-	0.8	VFD	CENTRIFUGAL	ROOF SUPPLY	1,147	0.43	1/2	1,725	BELT	460 / 3	1.1	1.38	15	196	N	-	-	GREENHECK	RSF-90-5	1-6, 8
SF	5-14	MAINTENANCE	ELEC RM 220	SUPPLY	3,100	-	1.0	VFD	CENTRIFUGAL	ROOF SUPPLY	968	1.34	1 1/2	1,725	BELT	460 / 3	3.0	3.75	15	307	N	-	-	GREENHECK	RSF-120-5	1-6, 8
SF	5-15	MAINTENANCE	TRAN DYN. RM 105	SUPPLY	820	-	0.4	VFD	CENTRIFUGAL	ROOF SUPPLY	764	0.15	1/2	1,725	BELT	460 / 3	1.1	1.38	15	194	N	-	-	GREENHECK	RSF-90-5	1-6, 8
SF	5-16	MAINTENANCE	LOADING ABY RM 170	SUPPLY	1,200	-	0.8	VFD	CENTRIFUGAL	ROOF SUPPLY	1,147	0.43	1/2	1,725	BELT	460 / 3	1.1	1.38	15	196	N	-	-	GREENHECK	RSF-90-5	1-6, 9
EF	6-1	FUEL/BRAKE	BRAKE/BST RM 114/001	EXHAUST	31,000	-	1.0	VFD	CENTRIFUGAL	UPBLAST	996	15.20	20	1,725	BELT	460 / 3	27.0	33.80	60	1,900	Y	64 x 64	60 x 60	GREENHECK	QEI-36	1-6, 7
EF	6-2	FUEL/BRAKE	FUEL AREA RM 115	EXHAUST	26,000	-	1.0	VFD	CENTRIFUGAL	UPBLAST	1,130	13.44	15	1,725	BELT	460 / 3	21.0	26.20	45	1,610	Y	58 x 58	54.5 x 54.5	GREENHECK	QEI-33	1-6, 7
EF	6-3	FUEL/BRAKE	BODY/SHOP 118/116	EXHAUST	18,000	-	1.0	VFD	CENTRIFUGAL	UPBLAST	1,384	9.21	10	1,725	BELT	460 / 3	14.0	17.50	30	912	Y	46 x 46	46.5 x 46.5	GREENHECK	QEI-27	1-6, 7
EF	6-4	FUEL/BRAKE	MEN'S RM	EXHAUST	120	-	0.25	ECM	CENTRIFUGAL	UPBLAST	1,691	0.03	1/15	1,725	DIRECT	115 / 1	1.3	2.00	15	28	N	-	-	GREENHECK	CUE-060-VG	1-6, 9
(E) EF	*6-5*	FUEL/BRAKE	*WOMEN'S RM*	*EXHAUST*	*100*	-	*EXISTING TO REMAIN*														*N*	-	-	*DAYTON*	*5DVN8*	10
EF	6-6	FUEL/BRAKE	LOCKER/LAUNDRY	EXHAUST	230	-	0.5	ECM	CENTRIFUGAL	UPBLAST	1,638	0.06	1/10	1,725	DIRECT	115 / 1	1.5	2.00	15	37	N	-	-	GREENHECK	CUE-080-VG	1-6, 9
EF	6-7	FUEL/BRAKE	C.A. 111/TEL. 112	EXHAUST	7,000	-	0.5	VFD	CENTRIFUGAL	UPBLAST	1,180	2.55	3	1,725	BELT	460 / 3	4.8	6.00	15	203	N	-	-	GREENHECK	CUBE-240HP-30	1-6, 9
EF	6-8	FUEL/BRAKE	FLUID TANK 110/GREESE TANK 109	EXHAUST	440	-	0.25	ECM	CENTRIFUGAL	UPBLAST	1,388	0.06	1/10	1,725	DIRECT	115 / 1	1.5	2.00	15	34	N	-	-	GREENHECK	CUE-90-VG	1-6, 9
EF	6-9	FUEL/BRAKE	FUEL RM 115	EXHAUST	1,500	-	0.75	ECM	CENTRIFUGAL	UPBLAST	1,268	0.38	1/2	1,300	DIRECT	115 / 1	6.4	8.00	15	73	N	-	-	GREENHECK	CUE-140-VG	1-6, 9
SF	6-1	FUEL/BRAKE	TIRE BAY RM 116	SUPPLY	9,000	-	1.0	VFD	CENTRIFUGAL	ROOF SUPPLY	BELT	3.69	5	1,725	BELT	460 / 3	7.6	9.50	15	783	N	-	-	GREENHECK	RSF-200-50	1-6, 8
SF	6-2	FUEL/BRAKE	BASEMENT 001	SUPPLY	4,000	-	1.0	VFD	CENTRIFUGAL	ROOF SUPPLY	855	1.93	2	1,725	BELT	460 / 3	3.4	4.25	15	427	N	-	-	GREENHECK	RSF-150-20	1-6, 8
EF	7-1	BUS WASH	BUS WASH	EXHAUST	8,000	-	0.5	VFD	CENTRIFUGAL	UPBLAST	601	1.59	2	1,725	BELT	460 / 3	3.4	4.25	15	206	N	-	-	GREENHECK	CUBE-300-20	1-6, 7
EF	7-2	BUS WASH	BUS WASH	EXHAUST	4,000	-	0.5	VFD	CENTRIFUGAL	UPBLAST	1,321	1.52	2	1,725	BELT	460 / 3	3.4	4.25	15	141	N	-	-	GREENHECK	CUBE-180-20	1-6, 9
EF	8-1	DETAILING	DETAILING/CLEANIN EQUIP. RM	EXHAUST	750	-	0.5	ECM	CENTRIFUGAL	UPBLAST	1,502	0.16	1/4	1,725	DIRECT	115 / 1	2.9	4.00	15	45	N	-	-	GREENHECK	CUE-099-VG	1-6, 9

NOTES:
1. CONTRACTOR TO VERIFY EXISTING ROOF CURB SIZE AND PROVIDE CURB ADAPTER AS NECESSARY FOR NEW FAN.
2. CONTRACTOR TO VERIFY THAT EXISTING ELECTRICAL SERVICE IS ADEQUATE FOR NEW FAN.
3. PROVIDE WITH DISCONNECT, BY DIV 26.
4. PROVIDE WITH BACKDRAFT DAMPER. LISTED MAX ETERNAL STATIC PRESSURE [EXCLUDES/INCLUDES] DAMPER. - FOR EXHAUST FANS ONLY.
5. PROVIDE WITH NEMA PREMIUM EFFICIENCY MOTORS.
6. PROVIDE WITH WEATHERPROOF CONSTRUCTION.
7. EQUIPMENT FURNISHED WITH BACK DRAFT DAMPER, DUCT ADAPTERS, TWO SPEED, 2-WINDING FAN MOTOR. INTERLOCK WITH FUTURE LNG SYSTEM.
8. PROVIDE WITH DUCT ADAPTER, BACKDRAFT DAMPER, DISCONNECT SWITCH, SMOKE DETECTOR, S'TAT AND FILTERS.
9. EQUIPMENT BACKDRAFT DAMPER AND DISCONNECT SWITCH.
10. EXISTING EQUIPMENT TO REMAIN.

Stantec
801 S. Figueroa Street, Suite 300
Los Angeles, CA 90017

Copyright Reserved
The Contractor shall verify and be responsible for all dimensions. DO NOT scale the drawing - any errors or omissions shall be reported to Stantec without delay.
The Copyrights to all designs and drawings are the property of Stantec. Reproduction or use for any purpose other than that authorized by Stantec is forbidden.

REVISION	DESCRIPTION	DATE
	100% RESUBMITTAL	5/13/2024
	100% CONSTRUCTION DRAWING SUBMITTAL	3/27/2024
	90% UPDATED CONSTRUCTION SUBMITTAL	2/13/2024
	90% CONSTRUCTION DRAWING SUBMITTAL	12/07/2023

REPLACEMENT OF MECHANICAL UNITS AT SANTA ANA BUS BASE
4301 W. MAC ARTHUR BLVD., SANTA ANA, CA

FAN SCHEDULE

JOB #:
DESIGN BY: SG
DRAWN BY: RW
CHECKED BY: GY
DATE:
SCALE:
SHEET: **M-003W**

LICENSED PROFESSIONAL ENGINEER
SEVAK GALSTYAN
M 39730
EXP. 12/31/25
MECHANICAL
STATE OF CALIFORNIA

OCTA
ORANGE COUNTY
TRANSPORTATION AUTHORITY
550 SOUTH MAIN STREET, ORANGE, CA

Autodesk Docs://20142333703_Santa_Ana_Bus/mech_SantaAnaBus_20142333703.rvt

5/8/2024 11:15:02 AM

PACKAGED ROOFTOP UNIT SCHEDULE

UNIT IDENTIFICATION					FAN DATA				COIL DATA												EFFICIENCY			ELECTRICAL				UNIT DIMENSIONS							
					INDOOR			OUTDOOR			DX COOLING COIL							HEATING COIL																
MARK	NUMBER	TYPE	BUILDING	AREA SERVED	FAN DRIVE TYPE	DESIGN AIRFLOW (CFM)	DESIGN ESP (INWC)	FAN DRIVE TYPE	AMBIENT DRY BULB	MINIMUM OUTSIDE AIR (CFM)	REFRIG.	TOTAL COOLING CAPACITY (BTU/H)	SENS. COOLING CAPACITY...	ENTERING DB (F)	ENTERING WB (F)	LEAVING DB (F)	LEAVING WB (F)	OUTPUT HEATING CAPACITY	ENTERIN G DB (F)	LEAVING DB (F)	HSPF	EER	SEER	V / PH	SYSTE M POWER (kW)	MCA	MOP	OPERATING WEIGHT (LBS)	HEIGHT (FT)	WIDTH (FT)	LENGTH (FT)	CURB ADAPTER MODEL	MANUFACTURER	MODEL	NOTES
RTU	4-1	PACKAGED RTU	OPERATIONS	NORTH	VARIABLE DIRECT	4,830	1	DIRECT	95	740	R-410A	178,000	125500	80	67	55	54	202	70	108	-	11	14.6	460 / 3	17.4	41.0	50	1,925	5	7.5	10.5	CA-TRN-593-TRN-592-...	TRANE	YSJ1804S0L	ALL
RTU	4-2	PACKAGED RTU	OPERATIONS	CENTRAL NORTH	VARIABLE DIRECT	2,350	1	DIRECT	95	100	R-410A	74,000	55,000	80	67	56	56	65	70	95	-	11	14.6	460 / 3	7.1	18.0	20	968	4.2	4.4	7.3	-	TRANE	YSJ072A4S0L	ALL
RTU	4-3	PACKAGED RTU	OPERATIONS	CENTRAL SOUTH	VARIABLE DIRECT	4,100	1	DIRECT	95	885	R-410A	118,000	91,000	80	67	58	57	121	70	97	-	11	14.6	460 / 3	11.8	29.0	40	1,020	4.2	4.4	7.3	-	TRANE	YSJ120A4S0L	ALL
RTU	4-4	PACKAGED RTU	OPERATIONS	SOUTH	VARIABLE DIRECT	4,000	1	DIRECT	95	940	R-410A	119,000	92,000	80	67	58	57	121	70	97	-	11	14.6	460 / 3	10.5	25.0	30	995	4.2	4.4	7.3	-	TRANE	YSJ102A4S0L	ALL
RTU	5-1	PACKAGED RTU	MAINTENANCE	2ND FLR OFFICES	VARIABLE DIRECT	5,910	1	DIRECT	95	830	R-410A	182,080	149,000	75	61	50	49	202	70	101	-	10.8	14.0	460 / 3	19.7	49.0	60	1,954	5	7.5	10.5	-	TRANE	YSJ210A4S0L	ALL
RTU	5-2	PACKAGED RTU	MAINTENANCE	BREAK ROOM	VARIABLE DIRECT	5,040	1	DIRECT	95	1,115	R-410A	179,000	128,000	80	67	56	55	202	70	104	-	10.8	14.0	460 / 3	17.6	41.0	50	1,924	5	7.5	10.5	-	TRANE	YSJ1804S0L	ALL
RTU	5-3	PACKAGED RTU	MAINTENANCE	REVENUE OFFICES	VARIABLE DIRECT	5,400	1	DIRECT	95	1,250	R-410A	180,000	132,000	80	67	56	55	202	70	104	-	10.8	14.0	460 / 3	17.6	41.0	50	1,924	5	7.5	10.5	-	TRANE	YSJ1804S0L	ALL
RTU	5-4	PACKAGED AC	MAINTENANCE	OFFICE	VARIABLE DIRECT	770	1	DIRECT	95	30	R-410A	23,800	6,600	80	67	55	53	23,200	70	95	7	11	13.4	208 / 1	1.8	20.6	30	328	3.3	3.75	4.9	CA-TRN-1213-TRN-59...	TRANE	4WCC4048E1000A	ALL
RTU	5-5	PACKAGED AC	MAINTENANCE	OFFICE	VARIABLE DIRECT	770	1	DIRECT	95	50	R-410A	23,800	9,300	80	67	55	53	23,200	70	95	7	11	13.4	208 / 1	1.8	20.6	30	328	3.3	3.75	4.9	CA-TRN-1213-TRN-59...	TRANE	4WCC4048E1000A	ALL
RTU	6-1	PACKAGED AC	FUEL/BRAKE	OFFICE	VARIABLE DIRECT	1,570	0.5	DIRECT	95	135	R-410A	47,000	42,000	80	67	55	53	45,000	70	95	7	11	13.4	208 / 1	4.1	31.9	50	425	4.1	4	5.1	CA-TRN-1235-TRN-5750	TRANE	4WCC4048E1000A	ALL

NOTES:
1. CONTRACTOR TO VERIFY EXISTING ROOF CURB SIZE AND PROVIDE CURB ADAPTER MODEL PER SCHEDULE FOR NEW EQUIPMENT.
2. PROVIDE WITH INTERMITTENT IGNITION DEVICE (IID)
3. FILTERS ARE TO BE PROVIDED WITH PRE-FILTER. MAXIMUM PRESSURE DROP SHALL BE BASED ON TOTAL PRESSURE DROP ACROSS THE FILTER BANK WITH DIRTY FILTERS.
4. PROVIDE WITH 100% MODULATING DRY-BULB TYPE AIR ECONOMIZER.
5. DISCONNECT PROVIDED BY DIVISION 26 CONTRACTOR.
6. PROVIDE SCCR RATINGS GREATER THAN FAULT AMPS SHOWN ON ELECTRICAL DRAWINGS.
7. PROVIDE SUPPLY AND POWERED EXHAUST FANS WITH VFD- BY RTU MANUFACTURER.
8. UNIT SHALL COMPLY WITH ECONOMIZER FAULT DETECTION AND DIAGNOSTICS (FDD) REQUIREMENTS PER CALIFORNIA TITLE 24, PART 6.
9. PROVIDE WITH DUCT SMOKE DETECTOR FOR AUTOMATIC UNIT SHUT OFF. FURNISHED AND WIRED BY DIV 26 CONTRACTOR. ISNTALLED BY DIV 23 CONTRACTOR.
10. LISTED UNIT OPERATING WEIGHT EXCLUDES CURB.
11. UNIT TO BE BACNET COMPATIBLE AND SHALL BE TIED TO THE EXISTING ENERGY MANAGEMENT CONTROL SYSTEM (EMCS).
12. PROVIDE VIBRATION ISOLATION AND SEISMIC RESTRAINT.
13. PROVIDE INVERTER-READY NEMA PREMIUM EFFICIENCY MOTOR WITH SHAFT GROUNDING SYSTEM.
14. PROVIDE A PROGRAMMABLE THERMOSTAT WITH TEMPERATURE SETPOINTS FOR AT LEAST FOUR SCHEDULING PERIODS WITHIN 24 HOURS.
15. PROVIDE CONDENSER COIL GAURD.
16. PROVIDE WITH 115V FIELD POWERED SERVICE OUTLET.
17. PROVIDE WITH MERV-13 FILTER.

MAKEUP AIR UNIT SCHEDULE

UNIT IDENTIFICATION					SUPPLY FAN					HEATING			ELECTRICAL				PHYSICAL CHARACTERISTICS							
MARK	NUMBER	TYPE	BUILDING	AREA SERVED	SUPPLY AIR VOLUME (CFM)	TOTAL STATIC PRESSURE (IN. W.C.)	MOTOR TYPE	MOTOR POWER (HP)	MOTOR SPEED (RPM)	MAX INPUT (BTU/H)	FUEL TYPE	SUPPLY GAS PRESSURE (INWC)	UNIT VOLT / PH	FLA	CONTROL V / PH	CONTROL TRANSFORMER (VA)	UNIT OPERATING WEIGHT (LBS)	HEIGHT (IN)	WIDTH (IN)	LENGTH (IN)	CURB ADAPTER MODEL	MANUFACTURER	MODEL	NOTES
MAU	5-1	MAKEUP AIR UNIT	MAINTENANCE	RUNNING REPAIR, RM 181	20,000	3	BELT	20	1,800	838,000	NATURAL GAS	10 - 14	460 / 3	28.1	115 / 1	500	2,699	63	91	186	VIBREX SRC-125	TRANE	DFOA-125-HLB	1-10
MAU	5-2	MAKEUP AIR UNIT	MAINTENANCE	RUNNING REPAIR, RM 179	15,000	3	BELT	15	1,800	668,000	NATURAL GAS	10 - 14	460 / 3	22.1	115 / 1	500	1,958	51	78	166	VIBREX SRC-122	TRANE	DFOA-122-HRB	1-10
MAU	5-3	MAKEUP AIR UNIT	MAINTENANCE	RUNNING REPAIR, RM 179	14,000	3	BELT	15	1,800	623,000	NATURAL GAS	10 - 14	460 / 3	22.1	115 / 1	500	1,958	51	78	166	VIBREX SRC-122	TRANE	DFOA-122-HRB	1-10
MAU	5-4	MAKEUP AIR UNIT	MAINTENANCE	RUNNING REPAIR, RM 179	14,000	3	BELT	15	1,800	623,000	NATURAL GAS	10 - 14	460 / 3	22.1	115 / 1	500	1,958	51	78	166	VIBREX SRC-122	TRANE	DFOA-122-HRB	1-10
MAU	5-5	MAKEUP AIR UNIT	MAINTENANCE	RUNNING REPAIR, RM 179	15,000	3	BELT	15	1,800	668,000	NATURAL GAS	10 - 14	460 / 3	22.1	115 / 1	500	1,958	51	78	166	VIBREX SRC-122	TRANE	DFOA-125-HRB	1-10
MAU	5-6	MAKEUP AIR UNIT	MAINTENANCE	BODY SHOP, RM 174	17,700	3	BELT	15	1,800	788,000	NATURAL GAS	10 - 14	460 / 3	22.1	115 / 1	500	2,699	63	91	186	VIBREX SRC-125	TRANE	DFOA-125-HRB	1-10
MAU	5-7	MAKEUP AIR UNIT	MAINTENANCE	COMP. EXH., RM 148	6,000	3	BELT	7 1/2	1,800	223,000	NATURAL GAS	10 - 14	460 / 3	12.1	115 / 1	500	1,187	39	52	140	VIBREX SRC-115	TRANE	DFOA-115-HRB	1-10
MAU	5-8	MAKEUP AIR UNIT	MAINTENANCE	CORR., RM 101	2,400	3	BELT	3	1,800	175,000	NATURAL GAS	10 - 14	460 / 3	5.9	115 / 1	500	1,187	39	52	140	VIBREX SRC-109	TRANE	DFOA-109-HRB	1-10
(E) MAU	*5-9*	*MAKEUP AIR UNIT*	*MAINTENANCE*	*PAINT BOOTH*	*37,800*	*2*	-	-	-	-	-	-	-	-	-	-	-	-	-	-	-	-	-	*11*

NOTES:
1. PROVIDE WITH INLET HOOD
2. PROVIDE WITH SHUTOFF DAMPERS
3. PROVIDE WITH VIBRATION ISOLATORS
4. PROVIDE WITH PAINTED CABINET / ACCESSORIES
5. PROVIDE WITH DISCONNECT SWITCH BY DIVISION 26.
6. PROVIDE WITH REMOTE CONTROL STATION
7. PROVIDE WITH MRT TOUCH REMOTE CONTROL STATION.
8. PROVIDE WITH G-90 GALVANIZED STEEL FILTER.
9. CONTRACTOR TO VERIFY EXISTING ROOF CURB SIZE AND PROVIDE CURB ADAPTER MODEL PER SCHEDULE FOR NEW EQUIPMENT.
10. PROVIDE WITH EMERGENCY POWER OFF SWITCH.
11. EXISTING EQUIPMENT TO REMAIN.

LICENSED PROFESSIONAL ENGINEER SEVAK GALSTYAN M-39730 EXP. 12/31/25 MECHANICAL STATE OF CALIFORNIA

IFB 4-2550 EXHIBIT B

Stantec
801 S. Figueroa Street, Suite 300
Los Angeles, CA 90017

Copyright Reserved
The Contractor shall verify and be responsible for all dimensions. DO NOT scale the drawing - use dimensions as indicated or as required by Engineer without delay.
This drawing is the property of the Consultant and may not be reproduced or used for other purposes. Reproduction or use for any purpose other than that authorized by Stantec is forbidden.

REVISION	DESCRIPTION	DATE
	100% RESUBMITTAL	5/13/2024
	100% CONSTRUCTION DRAWING SUBMITTAL	3/27/2024
	90% UPDATED CONSTRUCTION SUBMITTAL	2/13/2024
	90% CONSTRUCTION DRAWING SUBMITTAL	12/07/2023

REPLACEMENT OF MECHANICAL UNITS AT SANTA ANA BUS BASE
4301 W. MAC ARTHUR BLVD., SANTA ANA, CA

ROOFTOP AND MAKEUP AIR UNITS SCHEDULES

JOB #:	
DESIGN BY:	SG
DRAWN BY:	RW
CHECKED BY:	GY
DATE:	
SCALE:	
SHEET:	M-004W

OCTA
ORANGE COUNTY TRANSPORTATION AUTHORITY
550 SOUTH MAIN STREET, ORANGE, CA

Autodesk Docs://2014233703_Santa_Ana_Bus/mech_SantaAnaBus_2014233703.rvt
5/8/2024 11:15:03 AM

PACKAGED HEAT PUMP SCHEDULE

UNIT IDENTIFICATION					FAN DATA			COIL DATA												EFFICIENCY		ELECTRICAL				UNIT DIMENSIONS							
											COOLING MODE						HEATING MODE																
MARK	NUMBER	TYPE	BUILDING	AREA SERVED	FAN DRIVE TYPE	DESIGN AIRFLOW (CFM)	DESIGN ESP (INWC)	AMBIENT DRY BULB (F)	MIN. OUTSIDE AIR (CFM)	REFRIG.	TOTAL COOLING CAPACITY (MBH)	POWER INPUT (kW)	ENTERING DB (F)	ENTERING WB (F)	LEAVING DB (F)	LEAVING WB (F)	OUTPUT HEATING CAPACITY	POWER INPUT (kW)	ENTERING DB (F)	LEAVING DB (F)	EER (BTU/WATT-HR)	SEER (BTU/WATT-HR)	V / PH	MCA	MOP	FILTER RATING	OPERATING WEIGHT (LBS)	HEIGHT (FT)	WIDTH (FT)	LENGTH (FT)	CURB ADAPTER MODEL	MANUFACTURER	MODEL	NOTES
HP	5-1	HEAT PUMP	MAINTENANCE	CONTROL	4-SPEED DIRECT	770	0.5	95	30	R-410A	23,800	2.09	76	62	55	54	23,200	1.95	70	95	11	13.4	208 / 1	20.6	30	MERV 13	328	46	45	52	-	TRANE	4WCC4024E1000A	ALL
HP	6-1	HEAT PUMP	FUEL/BRAKE	BLDG. OFFICE	4-SPEED DIRECT	770	0.5	95	30	R-410A	23,800	2.09	74	61	55	54	23,200	1.95	70	95	11	13.4	208 / 1	20.6	30	MERV 13	328	46	45	52	CA-TRN-1213-TRN-590-9	TRANE	4WCC4024E1000A	ALL

NOTES:
1. CONTRACTOR TO VERIFY EXISTING ROOF CURB SIZE AND PROVIDE CURB ADAPTER AS NECESSARY FOR NEW EQUIPMENT.
2. PROVIDE WITH INTERMITTENT IGNITION DEVICE (IID)
3. FILTERS ARE TO BE PROVIDED WITH PRE-FILTER. MAXIMUM PRESSURE DROP SHALL BE BASED ON TOTAL PRESSURE DROP ACROSS THE FILTER BANK WITH DIRTY FILTERS.
4. PROVIDE WITH 100% MODULATING DRY-BULB TYPE AIR ECONOMIZER.
5. DISCONNECT PROVIDED BY DICISION 26 CONTRACTOR.
6. PROVIDE SCCR RATINGS GREATER THAN FAULT AMPS SHOWN ON ELECTRICAL DRAWINGS.
7. PROVIDE SUPPLY AND POWERED EXHAUST FANS WITH VFD- BY RTU MANUFACTURER.
8. UNIT SHALL COMPLY WITH ECONOMIZER FAULT DETECTION AND DIAGNOSTICS (FDD) REQUIREMENTS PER CALIFORNIA TITLE 24, PART 6.
9. PROVIDE WITH DUCT SMOKE DETECTOR FOR AUTOMATIC UNIT SHUT OFF. FURNISHED AND WIRED BY DIV 26 CONTRACTOR. ISNTALLED BY DIV 23 CONTRACTOR.
10. LISTED UNIT OPERATING WEIGHT EXCLUDES CURB.
11. UNIT TO BE BACNET COMPATIBLE AND SHALL BE TIED TO THE EXISTING ENERGY MANAGEMENT CONTROL SYSTEM (EMCS).
12. PROVIDE VIBRATION ISOLATION AND SEISMIC RESTRAINT.
13. PROVIDE INVERTER-READY NEMA PREMIUM EFFICIENCY MOTOR WITH SHAFT GROUNDING SYSTEM.
14. PROVIDE A PROGRAMMABLE THERMOSTAT WITH TEMPERATURE SETPOINTS FOR AT LEAST FOUR SCHEDULING PERIODS WITHIN 24 HOURS.
15. PROVIDE CONDENSER COIL GAURD.
16. PROVIDE WITH 115V FIELD POWERED SERVICE OUTLET.

PACKAGED AIR CONDITIONER SCHEDULE

UNIT IDENTIFICATION					FAN DATA		COIL DATA			EFFICIENCY		ELECTRICAL				FILTER	UNIT DIMENSIONS							
MARK	NUMBER	TYPE	BUILDING	AREA SERVED	FAN DRIVE TYPE	DESIGN AIRFLOW (CFM)	AMBIENT DRY BULB (F)	REFRIGERANT	TOTAL COOLING CAPACITY (MBH)	EER	SEER	V / PH	SYSTEM POWER (kW)	MCA	MOP	FILTER RATING	OPERATING WEIGHT (LBS)	HEIGHT (IN)	WIDTH (IN)	LENGTH (IN)	CURB ADAPTER MODEL	MANUFACTURER	MODEL	NOTES
AC	4-1	PACKAGED COOLING UNIT	OPERATIONS	COMPUTER ROOM	4-SPEED DIRECT	785	95	R-410A	23,200	11	13.4	208 / 1	3.4	16.7	25	MERV 13	358	36	49	42	CA-TRN-1213-TRN-590-9	TRANE	4TCC4042E1000A	ALL
AC	4-2	PACKAGED COOLING UNIT	OPERATIONS	TELECOM ROOM	4-SPEED DIRECT	785	95	R-410A	23,200	11	13.4	208 / 1	3.4	16.7	25	MERV 13	358	36	49	42	-	TRANE	4TCC4042E1000A	ALL
AC	5-1	PACKAGED COOLING UNIT	MAINTENANCE	COMM ROOM	4-SPEED DIRECT	785	95	R-410A	23,200	11	13.4	208 / 1	3.4	16.7	25	MERV 13	358	36	49	42	-	TRANE	4TCC4042E1000A	ALL
AC	5-2	PACKAGED COOLING UNIT	MAINTENANCE	LAN ROOM	4-SPEED DIRECT	785	95	R-410A	23,200	11	13.4	208 / 1	3.4	16.7	25	MERV 13	358	36	49	42	-	TRANE	4TCC4042E1000A	ALL
AC	6-1	PACKAGED COOLING UNIT	FUEL/BRAKE	COMM	4-SPEED DIRECT	785	95	R-410A	23,200	11	13.4	208 / 1	3.4	16.7	25	MERV 13	358	36	49	42	CA-TRN-1213-TRN-590-9	TRANE	4TCC4042E1000A	ALL

NOTES:
1. CONTRACTOR TO VERIFY EXISTING ROOF CURB SIZE AND PROVIDE CURB ADAPTER AS NECESSARY FOR NEW EQUIPMENT.
2. PROVIDE WITH INTERMITTENT IGNITION DEVICE (IID)
3. FILTERS ARE TO BE PROVIDED WITH PRE-FILTER. MAXIMUM PRESSURE DROP SHALL BE BASED ON TOTAL PRESSURE DROP ACROSS THE FILTER BANK WITH DIRTY FILTERS.
4. PROVIDE WITH 100% MODULATING DRY-BULB TYPE AIR ECONOMIZER.
5. DISCONNECT PROVIDED BY DICISION 26 CONTRACTOR.
6. PROVIDE SCCR RATINGS GREATER THAN FAULT AMPS SHOWN ON ELECTRICAL DRAWINGS.
7. PROVIDE SUPPLY AND POWERED EXHAUST FANS WITH VFD- BY RTU MANUFACTURER.
8. UNIT SHALL COMPLY WITH ECONOMIZER FAULT DETECTION AND DIAGNOSTICS (FDD) REQUIREMENTS PER CALIFORNIA TITLE 24, PART 6.
9. PROVIDE WITH DUCT SMOKE DETECTOR FOR AUTOMATIC UNIT SHUT OFF. FURNISHED AND WIRED BY DIV 26 CONTRACTOR. ISNTALLED BY DIV 23 CONTRACTOR.
10. LISTED UNIT OPERATING WEIGHT EXCLUDES CURB.
11. UNIT TO BE BACNET COMPATIBLE AND SHALL BE TIED TO THE EXISTING ENERGY MANAGEMENT CONTROL SYSTEM (EMCS).
12. PROVIDE VIBRATION ISOLATION AND SEISMIC RESTRAINT.
13. PROVIDE INVERTER-READY NEMA PREMIUM EFFICIENCY MOTOR WITH SHAFT GROUNDING SYSTEM.
14. PROVIDE A PROGRAMMABLE THERMOSTAT WITH TEMPERATURE SETPOINTS FOR AT LEAST FOUR SCHEDULING PERIODS WITHIN 24 HOURS.
15. PROVIDE CONDENSER COIL GAURD.
16. PROVIDE WITH 115V FIELD POWERED SERVICE OUTLET.

LICENSED PROFESSIONAL ENGINEER
SEVAK GALSTIAN
M-39730
EXP. 12/31/25
MECHANICAL
STATE OF CALIFORNIA

IFB 4-2550 EXHIBIT B

Stantec
801 S. Figueroa Street, Suite 300
Los Angeles, CA 90017

Copyright Reserved
The Contractor shall verify and be responsible for all dimensions. DO NOT scale the drawing - use dimensions or omissions shall be reported to Stantec without delay.
This drawing is the property of Stantec and shall not be reused or reproduced in whole or in part. Reproduction or use for any purpose other than that authorized by Stantec is forbidden.

REVISION	DESCRIPTION	DATE
	100% RESUBMITTAL	5/13/2024
	100% CONSTRUCTION DRAWING SUBMITTAL	3/27/2024
	90% UPDATED CONSTRUCTION SUBMITTAL	2/13/2024

REPLACEMENT OF MECHANICAL UNITS AT SANTA ANA BUS BASE
4301 W. MAC ARTHUR BLVD., SANTA ANA, CA

HEATPUMP AND AIR CONDITIONER SCHEDULES

JOB #:
DESIGN BY: Designer
DRAWN BY: Author
CHECKED BY: Checker
DATE:
SCALE:
SHEET: M-005W

OCTA
ORANGE COUNTY TRANSPORTATION AUTHORITY
550 SOUTH MAIN STREET, ORANGE, CA

Autodesk Docs://2014233703_Santa_Ana_Bus/mech_SantaAnaBus_2014233703.rvt
5/8/2024 11:15:03 AM

IFB 4-2550 EXHIBIT B

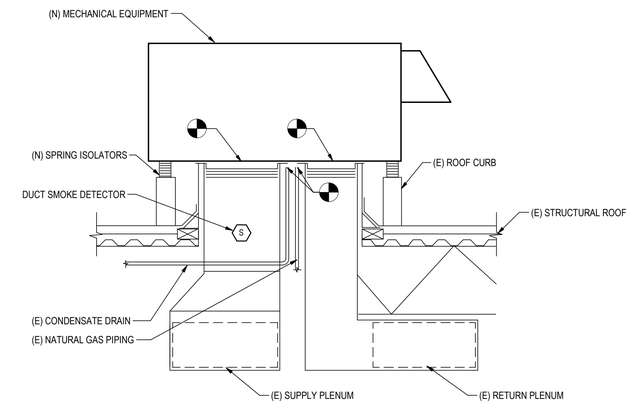

NOTES:

1. CONTRACTOR SHALL PERFORM WORK IN A MANNER SO THAT NO WARRANTIES ARE VOIDED.
2. REFER TO THE CONTRACT DOCUMENTS FOR DUCT MATERIAL AND INSULATION REQUIREMENTS.
3. THE CURB INSULATION SHALL BE EQUAL TO THE ROOF INSULATION RATING
4. COORDINATE THE LOCATION AND SIZE OF THE EQUIPMENT RAIL BASED ON THE EQUIPMENT.
5. CONTRACTOR TO REUSE EXISTING ROOF CURBS AND/OR PROVIDE NEW ROOF CURB ADAPTERS AS SPECIFIED ON THE SCHEDULES.
6. THE TOP OF THE CURB IS TO BE MOUNTED A MINIMUM OF 18 INCHES / 46 CM ABOVE THE TOP OF THE ROOF UNLESS NOTED OTHERWISE.
7. PROVIDE A HINGED FAN BASE FOR ACCESS TO THE MOTORIZED DAMPER
8. CONTRACTOR TO VERIFY EXISTING ROOF CURB IS ADEQUATE FOR NEW EQUIPMENT AND PROVIDE WITH CURB ADAPTER AS REQUIRED.

2 M-006 ROOFTOP EQUIPMENT RECONNECTION DETAIL

12" = 1'-0"

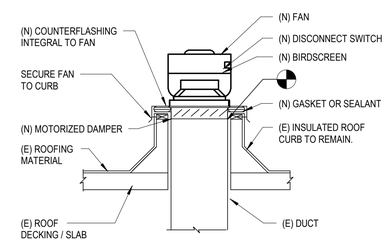

NOTES:

1. COORDINATE SCOPE OF WORK WITH ROOFING CONTRACTOR / OWNER TO NOT VOID ANY WARRANTIES.
2. CONTRACTOR IS TO REUSE EXISTING DUCT.
3. COORDINATE THE LOCATION AND SIZE OF THE EQUIPMENT RAIL BASED ON THE EQUIPMENT.
4. CONTRACTOR IS TO REUSE EXISTING INSULATED ROOF CURB AND/OR PROVIDE NEW ROOF CURB ADAPTERS AS SPECIFIED ON THE SCHEDULES.
5. THE TOP OF THE CURB IS TO BE MOUNTED A MINIMUM OF 18 INCHES / 46 CM ABOVE THE TOP OF THE ROOF UNLESS NOTED OTHERWISE.
6. PROVIDE A HINGED FAN BASE FOR ACCESS TO THE MOTORIZED DAMPER.
7. CONTRACTOR TO VERIFY EXISTING ROOF CURB IS ADEQUATE FOR NEW EQUIPMENT AND PROVIDE WITH CURB ADAPTER AS REQUIRED.

1 M-006 ROOF MOUNTED FAN RECONNECTION DETAIL

12" = 1'-0"

LICENSED PROFESSIONAL ENGINEER
SEVAN GALSTYAN
M-39730
EXP. 02/31/25
MECHANICAL
STATE OF CALIFORNIA

Stantec
801 S. Figueroa Street, Suite 300
Los Angeles, CA 90017

Copyright Reserved
The Contractor shall verify and be responsible for all dimensions. DO NOT scale the drawing, any errors or omissions shall be reported to Stantec without delay.
This drawing is the property of Stantec and shall not be reproduced in whole or in part without written permission. Reproduction or use for any purpose other than that authorized by Stantec is forbidden.

REVISION	DESCRIPTION	DATE
	100% RESUBMITTAL	5/13/2024
	100% CONSTRUCTION DRAWING SUBMITTAL	3/27/2024
	90% UPDATED CONSTRUCTION SUBMITTAL	2/13/2024
	90% CONSTRUCTION DRAWING SUBMITTAL	12/07/2023

REPLACEMENT OF MECHANICAL UNITS AT SANTA ANA BUS BASE
4301 W. MAC ARTHUR BLVD., SANTA ANA, CA

MECHANICAL DETAILS

JOB #:	
DESIGN BY:	SG
DRAWN BY:	RW
CHECKED BY:	GY
DATE:	
SCALE:	12" = 1'-0"
SHEET:	M-006W

OCTA
ORANGE COUNTY TRANSPORTATION AUTHORITY
550 SOUTH MAIN STREET, ORANGE, CA

Autodesk Docs://2014233703_Santa_Ana_Bus/mech_SantaAnaBus_2014233703.rvt

5/8/2024 11:15:03 AM

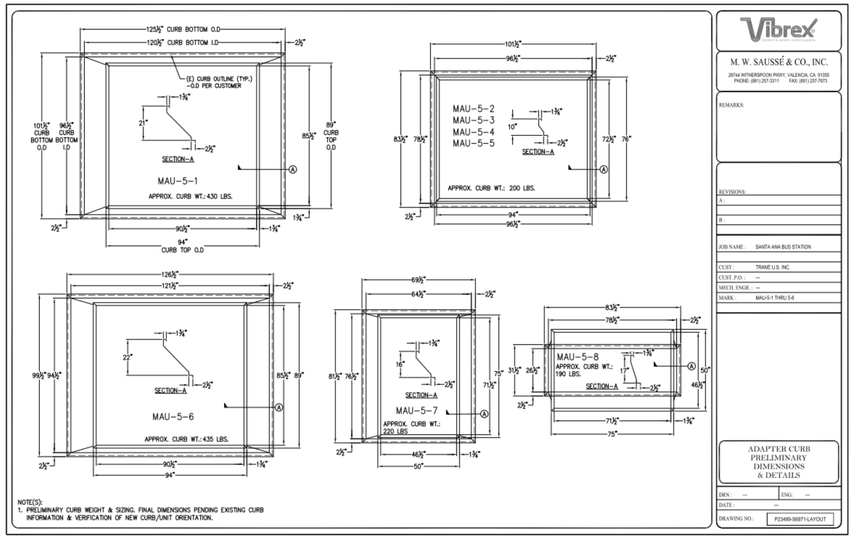

Vibrex

M. W. SAUSSÉ & CO., INC.
28744 witherspoon pkwy, valencia, ca 91355
PHONE: (661) 257-3311 FAX: (661) 257-7673

REMARKS:

REVISIONS:
A :
B :

JOB NAME : SANTA ANA BUS STATION
CUST : TRANE U.S. INC.
CUST. P.O. : —
MECH. ENGR. : —
MARK : MAU-5-1 THRU 5-8

ADAPTER CURB PRELIMINARY DIMENSIONS & DETAILS

DRN : — ENG : —
DATE : —
DRAWING NO. : P23499-59871-LAYOUT

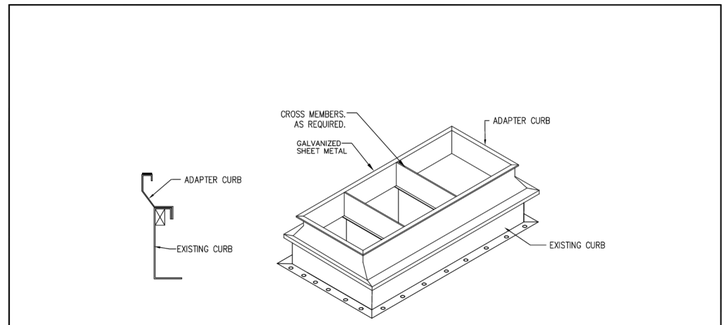

THIS IS A TYPICAL DRAWING SUBMITTED FOR APPROVAL OF TYPE ONLY. CERTIFIED DIMENSIONAL DRAWINGS ARE AVAILABLE WITH THE RECEIPT OF APPROVED EQUIPMENT SUBMITTALS.

Vibrex

TYPE : ADAPTER CURB

M. W. SAUSSÉ & CO., INC.
28744 WITHERSPOON PKWY, VALENCIA, CA 91355
PHONE: (661) 257-3311 FAX: (661) 257-7673

JOB NAME : SANTA ANA BUS STATION	REVISIONS :	DRN : KL	ENG : KL
CUST : LOS ANGELES TRANE	A :	DATE : 01/16/2024	
CUST. P.O. : —	B :	DRAWING NO. :	
MECH. ENGR. : —	C :	PREL-011624-2	
MARK : OPTION 2: MAU-5-1, 6 (MODEL 125); MAU-5-2, 3, 4, 5 (MODEL 122); MAU-5-7 (MODEL 115); MAU-5-8 (MODEL 109) (QTY. 8)			

2 M-007 MAU ROOF CURB ADAPTER DETAIL

12" = 1'-0"

MicroMetl

DATE:	WEIGHT (LBS):	DESCRIPTION:	PART NUMBER:
02/2020	182	CURB ADAPTER	CA-TRN-593-TRN-592-11

SUBMITTED TO: COMPANY: JOB NAME: APPROVED BY: DATE:

EXISTING UNIT: NEW UNIT:

CURB ADAPTER INFORMATION:

1. BEFORE ORDERING CURB ADAPTER, CONTRACTOR MUST CONFIRM THE DIMENSIONS OF THE EXISTING CURB ON THIS DRAWING

2. BEFORE NEW HVAC UNIT IS SET IN PLACE, INSPECT STRUCTURAL STABILITY OF EXISTING CURB AND BUILDING'S ROOF LOAD CAPABILITY. REINFORCE IF REQUIRED.

3. ALL CURB ADAPTERS WILL INCREASE THE SYSTEM'S EXTERNAL STATIC PRESSURE AND MUST BE INCLUDED WHEN CALCULATING UNIT REQUIREMENTS

APPROXIMATE STATIC PRESSURE LOSS AT CFM RANGE				
CFM	5,000	6,700	8,400	10,000
STATIC LOSS	0.021	0.037	0.059	0.084
NOTE:	STATIC PRESSURE LOSS DATA IS BASED ON SIMULATED ANALYSIS WHICH INCLUDES BOTH SUPPLY AND RETURN			

FEATURES:
- FULLY WELDED HEAVY GAUGE CONSTRUCTION
- TRANSITIONS INCLUDED
- FULL INTERNAL INSULATION
- GASKET PACKAGE INCLUDED

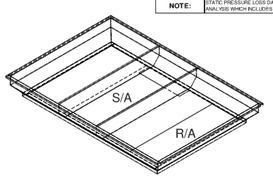

EXISTING CURB TOP VIEW

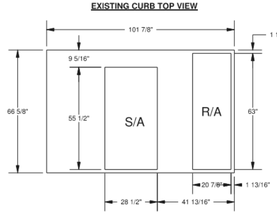

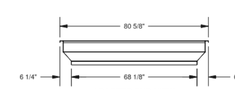

ADAPTER END VIEW

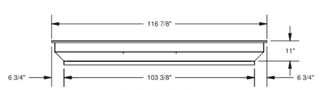

ADAPTER SIDE VIEW

NOTES:

THIS DOCUMENT IS THE PROPERTY OF MICROMETL CORPORATION AND IS DELIVERED UPON THE EXPRESS CONDITION THAT THE CONTENTS WILL NOT BE DISCLOSED OR USED WITHOUT MICROMETL'S WRITTEN CONSENT.
MANUFACTURER RESERVES THE RIGHT TO DISCONTINUE, OR CHANGE AT ANYTIME, SPECIFICATIONS & DESIGNS WITHOUT ANY NOTICE AND WITHOUT INCURRING OBLIGATIONS. COPYRIGHT MICROMETL CORPORATION 2017. ALL RIGHTS RESERVED

MICROMETL CORP * 3035 N. SHADELAND AVE., STE 300 * INDIANAPOLIS, IN 46226 * 1-800-662-4822 *** MICROMETL * 905 SOUTHERN WAY * SPARKS, NV * 1-800-884-4662 *** MICROMETL * 201 KODAK BLVD * LONGVIEW, TX 75602 * 1-903-248-4800

MicroMetl

DATE:	WEIGHT (LBS):	DESCRIPTION:	PART NUMBER:
02/2020	61	CURB ADAPTER	CA-TRN-I213-TRN-590-9

SUBMITTED TO: COMPANY: JOB NAME: APPROVED BY: DATE:

EXISTING UNIT: NEW UNIT:

CURB ADAPTER INFORMATION:

1. BEFORE ORDERING CURB ADAPTER, CONTRACTOR MUST CONFIRM THE DIMENSIONS OF THE EXISTING CURB ON THIS DRAWING

2. BEFORE NEW HVAC UNIT IS SET IN PLACE, INSPECT STRUCTURAL STABILITY OF EXISTING CURB AND BUILDING'S ROOF LOAD CAPABILITY. REINFORCE IF REQUIRED.

3. ALL CURB ADAPTERS WILL INCREASE THE SYSTEM'S EXTERNAL STATIC PRESSURE AND MUST BE INCLUDED WHEN CALCULATING UNIT REQUIREMENTS

APPROXIMATE STATIC PRESSURE LOSS AT CFM RANGE			
CFM	400	800	1,200
STATIC LOSS	0.006	0.031	0.073
NOTE:	STATIC PRESSURE LOSS DATA IS BASED ON SIMULATED ANALYSIS WHICH INCLUDES BOTH SUPPLY AND RETURN		

FEATURES:
- FULLY WELDED HEAVY GAUGE CONSTRUCTION
- TRANSITIONS INCLUDED
- FULL INTERNAL INSULATION
- GASKET PACKAGE INCLUDED

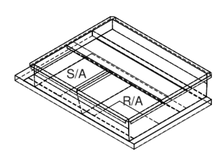

EXISTING CURB TOP VIEW

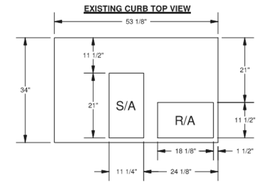

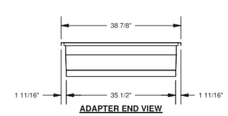

ADAPTER END VIEW

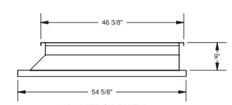

ADAPTER SIDE VIEW

NOTES:

THIS DOCUMENT IS THE PROPERTY OF MICROMETL CORPORATION AND IS DELIVERED UPON THE EXPRESS CONDITION THAT THE CONTENTS WILL NOT BE DISCLOSED OR USED WITHOUT MICROMETL'S WRITTEN CONSENT.
MANUFACTURER RESERVES THE RIGHT TO DISCONTINUE, OR CHANGE AT ANYTIME, SPECIFICATIONS & DESIGNS WITHOUT ANY NOTICE AND WITHOUT INCURRING OBLIGATIONS. COPYRIGHT MICROMETL CORPORATION 2017. ALL RIGHTS RESERVED

MICROMETL CORP * 3035 N. SHADELAND AVE., STE 300 * INDIANAPOLIS, IN 46226 * 1-800-662-4822 *** MICROMETL * 905 SOUTHERN WAY * SPARKS, NV * 1-800-884-4662 *** MICROMETL * 201 KODAK BLVD * LONGVIEW, TX 75602 * 1-903-248-4800

1 M-007 RTU ROOF CURB ADAPTER DETAIL

12" = 1'-0"

MicroMetl

WEIGHT:	DATE:	Part Number:
103 lbs	5/10	CA-TRN-I235-TRN-5750

SUBMITTED TO: JOB NAME:
COMPANY: EQUIPMENT:
DRAWN BY: NOTES:

NEW TRANE UNITS (TRN-I235)

2WCC,WCX,YCX,4TCC,TCX 3042A-3060A; 2/4YCC 3042-3060A; 4DCY,TCY 4048A-4060A; 4DCZ 6048A-6060A; 4WCZ,YCZ 6048A-6060A; 4WCC,WCX,WCY,YCX 3048A-3060A; 4YCY 4042A-4060A

EXISTING UNIT (TRN-5750)

TRANE: DCY 048F,060F; TCC 048F/F-H/G,60F/G; TCP,YCP 048G,060G; TCX,TCY,WCC,WCP,WCX,WCY 048F/G,060F/G; WCZ 060F; YCC 048F-H,060F; YCX,YCY 048F-H/G,060F-M/G; YCZ 050F,060F

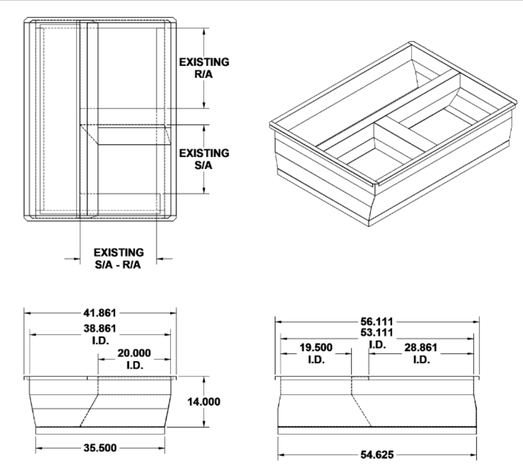

Features:
- Fully assembled curb adaptor.
- Includes internal duct transitions.
- Internally insulated with 1" - 1.5" lb insulation. Gasketing package provided.
- Adaptor pans and supports provided / field installed

Curb Adaptor Information
- To verify that the curb adaptor shown on this page is the correct adaptor for you job be sure the existing curb is the same size as the dimensions provided. (The bottom dimensions of curb adaptor are larger than existing curb outside dimension.)
- Before new HVAC unit is set in place, inspect structural stability of existing curb and building's roof load capability. Reinforce if required.
- All curb adaptors will increase the systems external static pressure and must be included when calculating unit requirements.
- Curb adaptors are designed to attach to an existing curb with side x side duct connections. The curb adaptor is not designed for use with concentric duct configuration.
- No calculations are available for this product. For a calculated product, please contact factory for part number, pricing, and lead time.
- Please contact factory for more detailed dimensional information if required. Designs are based on standard factory dimensions, and may differ in the field.

THIS DOCUMENT IS THE PROPERTY OF MICROMETL CORPORATION AND IS DELIVERED UPON THE EXPRESS CONDITION THAT THE CONTENTS WILL NOT BE DISCLOSED OR USED WITHOUT MICROMETL'S WRITTEN CONSENT. FORM NO. 6997-1P

MICROMETL CORP. - 3035 NORTH SHADELAND AVENUE, SUITE 300 - INDIANAPOLIS, IN 46226 - 1-800-662-4822 — MICROMETL SPARKS - 905 SOUTHERN WAY - SPARKS, N

LICENSED PROFESSIONAL ENGINEER SEVAK GALSTYAN M-39730 EXP. 12/31/25 MECHANICAL STATE OF CALIFORNIA

Stantec
801 S. Figueroa Street, Suite 300
Los Angeles, CA 90017

Copyright Reserved
The Contractor shall verify and be responsible for all dimensions. DO NOT scale the drawing - use dimensions or details as indicated. Report errors to Stantec without delay.
This drawing is the property of Stantec and shall not be reproduced in whole or in part without permission. Reproduction or use for any purpose other than that authorized by Stantec is forbidden.

REVISION	DESCRIPTION	DATE
	100% RESUBMITTAL	5/13/2024
	100% CONSTRUCTION DRAWING SUBMITTAL	3/27/2024
	90% UPDATED CONSTRUCTION SUBMITTAL	2/13/2024

REPLACEMENT OF MECHANICAL UNITS AT SANTA ANA BUS BASE
4301 W. MAC ARTHUR BLVD., SANTA ANA, CA

MECHANICAL DETAILS

JOB #:
DESIGN BY: SG
DRAWN BY: RW
CHECKED BY: GY
DATE:
SCALE: 12" = 1'-0"
SHEET: M-007W

OCTA
ORANGE COUNTY TRANSPORTATION AUTHORITY
550 SOUTH MAIN STREET, ORANGE, CA

Autodesk Docs://2014233703_Santa_Ana_Bus/mech_SantaAnaBus_2014233703.rvt
5/8/2024 11:15:03 AM

Stantec

801 S. Figueroa Street, Suite 300
Los Angeles, CA 90017

Copyright Reserved
The Contractor shall verify and be responsible for all dimensions. DO NOT scale the drawing - use dimensions or contact architect regarding discrepancies. This drawing is the property of Stantec and may not be reproduced or used for any purpose other than that authorized by Stantec in writing.

REVISION	DESCRIPTION	DATE
	100% RESUBMITTAL	5/13/2024
	100% CONSTRUCTION DRAWING SUBMITTAL	3/27/2024
	90% UPDATED CONSTRUCTION SUBMITTAL	2/13/2024
	90% CONSTRUCTION DRAWING SUBMITTAL	12/07/2023

REPLACEMENT OF MECHANICAL UNITS AT SANTA ANA BUS BASE

4301 W. MAC ARTHUR BLVD., SANTA ANA, CA

MECHANICAL CONTROLS

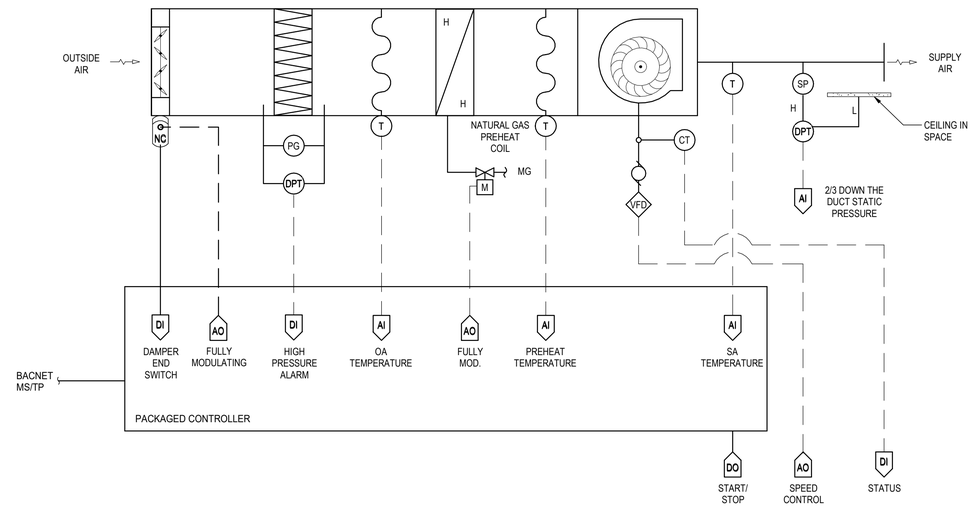

TYPICAL MAKEUP AIR UNIT

MAKEUP AIR HANDLER SEQUENCE OF OPERATION

GENERAL
1. ALL HAND-OFF-AUTO (HOA) SWITCHES NORMALLY REMAIN IN THE AUTO POSITION AND THE HAND AND OFF POSITIONS ARE USED FOR MAINTENANCE SITUATIONS. ALL SETPOINTS, DEADBANDS, AND TIME DELAY INTERVALS DESCRIBED IN SEQUENCE SHALL BE ADJUSTABLE BY SYSTEM OPERATORS. APPROPRIATE DEADBANDS AND TIME DELAYS SHALL BE USED TO PREVENT SHORT CYCLING SITUATIONS.
2. PROVIDE AND INSTALL ALL NECESSARY COMPONENTS AND ACCESSORIES FOR A COMPLETE AND OPERATIONAL SYSTEM INCLUDING, BUT NOT LIMITED TO SENSORS, RELAYS, COMMUNICATION WIRING AND CONDUIT, AND ALL NECESSARY ELECTRICAL DEVICES, WIRING, AND CONDUIT.
3. ALL MAKEUP AIR UNITS (MAU) SHALL INTERLOCK WITH EXHAUST FANS. REFER TO FLOOR PLANS FOR FURTHER DETAILS.

SCHEDULING
THE MAU SHALL HAVE SCHEDULING FUNCTIONALITY THROUGH THE DDC SYSTEM.

START UP MODE
1. UPON STARTUP OF EXHAUST FANS, DDC SHALL ISSUE COMMAND TO MAH FOR STARTUP.
2. THE OUTSIDE AIR DAMPER SHALL OPEN TO MINIMUM POSITION. THE DAMPER END-SWITCH SHALL VERIFY THAT THE DAMPER IS NOT CLOSED PRIOR TO ENERGIZING THE SUPPLY FAN.
3. THE SUPPLY FAN SHALL BE ENERGIZED.

SUPPLY FAN CONTROL
1. THE SUPPLY FAN IS ENERGIZED AND RUNS CONTINUOUSLY.
2. DDC MONITORS THE SUPPLY FAN THROUGH ITS CURRENT SENSOR. UPON A FAILURE, AN ALARM IS ISSUED.

SAFETY CONTROL
1. IF SMOKE IS DETECTED IN THE AIRSTREAM BY A DUCT SMOKE DETECTOR OR THE FIRE ALARM ZONE MODULE INDICATES A ZONE ALARM, THE SYSTEM SHALL BE DEACTIVATED

FILTER MONITORING
1. DDC SHALL MONITOR THE AIR FILTER PRESSURE DROP AND ISSUE A DIRTY FILTER ALARM UPON HIGH DIFFERENTIAL PRESSURE.

VENTILATION
1. DDC SHALL MODULATE SUPPLY FAN TO MAINTAIN A SPACE PRESSURE SET POINT.

GENERAL EXHAUST EMCS POINTS LIST

TAG	NAME/FUNCTION	AI	AO	DI	DO	REMARKS
1	EXHAUST FAN ENABLE/DISABLE				√	
2	EXHAUST FAN ALARM			√		

GENERAL EXHAUST ALARMS

DESIGNATION	POINT	PROTOCOL
EXHAUST FAN FAILURE	2	ALARM AT OPERATOR'S SYSTEM TERMINAL.

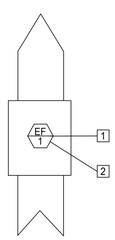

SEQUENCE OF OPERATION
APPLIES TO ALL EXHAUST FANS

OCCUPIED MODE:
EQUIPMENT SHALL OPERATE CONTINUOUSLY IN OCCUPIED (ENABLED) MODE. EF-X SHALL BE NORMALLY OFF.

1 M-008 **EXHAUST CONTROL DIAGRAM**
NOT TO SCALE

2 M-008 **CONTROL DIAGRAM - MAKEUP AIR UNIT**
NOT TO SCALE

LICENSED PROFESSIONAL ENGINEER
SEVAK GALSTIAN
M-39730
EXP. 12/31/25
MECHANICAL
STATE OF CALIFORNIA

JOB #:	
DESIGN BY:	SG
DRAWN BY:	RW
CHECKED BY:	GY
DATE:	
SCALE:	NOT TO SCALE
SHEET:	M-008W

OCTA

ORANGE COUNTY
TRANSPORTATION AUTHORITY
550 SOUTH MAIN STREET, ORANGE, CA

Autodesk Docs://2014233703_Santa_Ana_Bus/mech_SantaAnaBus_2014233703.rvt

Stantec
801 S. Figueroa Street, Suite 300
Los Angeles, CA 90017

Copyright Reserved
The Contractor shall verify and be responsible for all dimensions. DO NOT scale the drawing - any errors or omissions shall be reported to Stantec without delay.
This drawing is the property of Stantec and shall not be reproduced in whole or in part without permission. Reproduction or use for any purpose other than that authorized by Stantec is forbidden.

REVISION	DESCRIPTION	DATE
	100% RESUBMITTAL	5/13/2024
	100% CONSTRUCTION DRAWING SUBMITTAL	3/27/2024
	90% UPDATED CONSTRUCTION SUBMITTAL	2/13/2024
	90% CONSTRUCTION DRAWING SUBMITTAL	12/07/2023

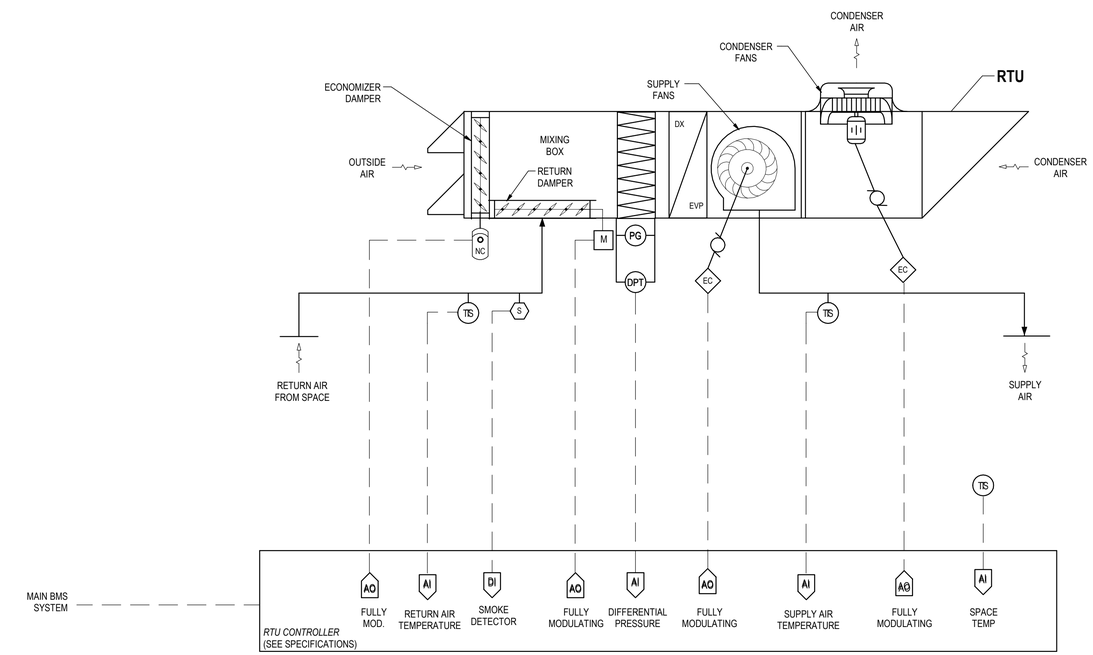

TYPICAL ROOFTOP UNIT

SEQUENCE OF OPERATION

GENERAL

1. ALL HAND-OFF-AUTO (HOA) SWITCHES NORMALLY REMAIN IN THE AUTO POSITION AND THE HAND AND OFF POSITIONS ARE USED FOR MAINTENANCE SITUATIONS. ALL SETPOINTS, DEADBANDS, AND TIME DELAY INTERVALS DESCRIBED IN SEQUENCE SHALL BE ADJUSTABLE BY SYSTEM OPERATORS. APPROPRIATE DEADBANDS AND TIME DELAYS SHALL BE USED TO PREVENT SHORT CYCLING SITUATIONS.
2. PROVIDE AND INSTALL ALL NECESSARY COMPONENTS AND ACCESSORIES FOR A COMPLETE AND OPERATIONAL SYSTEM INCLUDING, BUT NOT LIMITED TO SENSORS, RELAYS, COMMUNICATION WIRING AND CONDUIT, AND ALL NECESSARY ELECTRICAL DEVICES, WIRING, AND CONDUIT.

START-UP

1. THE ROOFTOP UNIT SHALL BE ACTIVATED BY THE MECHANICAL CONTROLLER AND SHALL RUN CONTINUOUSLY.
2. THE UNIT SHALL MONITOR AND LOG ALL SENSOR INPUTS.

SUPPLY FAN CONTROL

1. THE SUPPLY FAN IS ENERGIZED AND RUNS CONTINUOUSLY.
2. CONTROLLER SHALL MODULATE THE SUPPLY FAN SPEED BETWEEN MANUFACTURER'S ESTABLISHED RANGE TO MAINTAIN SPACE TEMPERATURE SETPOINT.
3. DDC MONITORS THE SUPPLY FAN THROUGH ITS CURRENT SENSOR. UPON A FAILURE, AN ALARM IS ISSUED.

ROOFTOP UNIT OPERATION

1. CONTROLLER SHALL PROVIDE ALL CONTROL OF SUPPLY FANS, CONDENSER FANS, MODULATING DAMPERS, COOLING COIL, REHEAT COIL, COMPRESSOR, AND ASSOCIATED COMPONENTS OF THE RTU UNIT.
2. ROOFTOP UNIT SHALL PROVIDE CONTINUOUS COOLING TO THE OFFICE SPACE BASED ON A 15-MIN AVERAGE RETURN AIR TEMPERATURE.
3. ROOFTOP UNIT SHALL PROVIDE ADJUSTABLE DISCHARGE AIR TEMPERATURE.

FILTER MONITORING

1. THE UNIT CONTROLLER SHALL MONITOR THE AIR FILTER DIFFERENTIAL PRESSURE DROP AND ISSUE A DIRTY FILTER ALARM UPON HIGH DIFFERENTIAL PRESSURE.

SAFETY CONTROL

1. IF SMOKE IS DETECTED IN THE AIRSTREAM BY A DUCT SMOKE DETECTOR OF THE FIRE ALARM ZONE MODULE INDICATES A ZONE ALARM, THE UNIT SHUTS DOWN. REFER TO SHUTDOWN MODE. IF A CONTROLLING SENSOR IS DETERMINED TO HAVE FAILED THAT WOULD DAMAGE THE EQUIPMENT OR CAUSE INAPPROPRIATE CONDITIONS IN THE SPACE, THE UNIT SHUTS DOWN. REFER TO SHUTDOWN MODE

SHUTDOWN MODE CONTROL

1. UPON A SHUTDOWN COMMAND FROM THE UNIT CONTROLLER OR A SAFETY CONTROL DEVICE COMMAND, THE UNIT COMMENCES SHUTDOWN.
2. THE SUPPLY FAN AND CONDENSER FAN ARE COMMANDED OFF.
3. THE RETURN AIR DAMPER IS MODULATES TO FULLY OPEN AND THE OUTSIDE AIR DAMPER MODULATES TO FULLY CLOSED.

SET POINTS

1. COOLING DISCHARGE AIR TEMPERATURE SETPOINT	55 F	(ADJ)
2. ROOM DIFFERENTIAL PRESSURE	+0.025 INWC	(ADJ)
3. ROOM DIFFERENTIAL PRESSURE TIME DELAY	1 MIN	(ADJ)

1 / M-009

CONTROL DIAGRAM - ROOF-MOUNTED PACKAGE UNIT WITH EXTERNAL POWERED ECONOMIZER

NOT TO SCALE

LICENSED PROFESSIONAL ENGINEER
SEVAK GALSTYAN
M-39730
EXP. 6/30/25
MECHANICAL
STATE OF CALIFORNIA

REPLACEMENT OF MECHANICAL UNITS AT SANTA ANA BUS BASE

4301 W. MAC ARTHUR BLVD., SANTA ANA, CA

MECHANICAL CONTROLS

JOB #:	
DESIGN BY:	SG
DRAWN BY:	RW
CHECKED BY:	GY
DATE:	
SCALE:	NOT TO SCALE
SHEET:	M-009W

OCTA

ORANGE COUNTY TRANSPORTATION AUTHORITY
550 SOUTH MAIN STREET, ORANGE, CA

Autodesk Docs://2014233703_Santa_Ana_Bus/mech_SantaAnaBus_2014233703.rvt
5/8/2024 11:15:04 AM

IFB 4-2550 EXHIBIT B

GENERAL NOTES

1. COORDINATE LOCATIONS OF ALL EQUIPMENT AND ROUTING OF ALL DUCTWORK AND PIPING WITH OTHER TRADES PRIOR TO ANY ROUGH-IN. PROVIDE OFFSETS AND TRANSITIONS WHERE REQUIRED TO ACCOMODATE BUILDING CONDITIONS AND PRESERVE HEADROOM.
2. INSTALL AND ROUTE CONDENSATE PIPING FOR ROOFTOP HVAC EQUIPMENT AND ROUTE AT LEAST 12 FEET AWAY FROM UNIT IN DIRECTION OF ROOF SLOPE AND ROOF DRAINS, MIN 1% PIPE SLOPE.
3. INSTALL EQUIPMENT LEVEL ON ROOF.
4. MAINTAIN MINIMUM OF 10'-0" OF HORIZONTAL DISTANCE BETWEEN BUILDING OUTDOOR AIR INTAKE AND BUILDING EXHAUST AIR AND PLUMBING VENTS.
5. EXISTING ROOF CURB AND DUCT TO BE REUSED. CONTRACTOR TO PROVIDE CURB ADAPTER FOR NEW EQUIPMENT PER SCHEDULE.

Keynote Legend

Key Value	Keynote Text
M:03	INSTALL NEW EXHAUST FAN AND RECONNECT TO EXISTING DUCTWORK BELOW

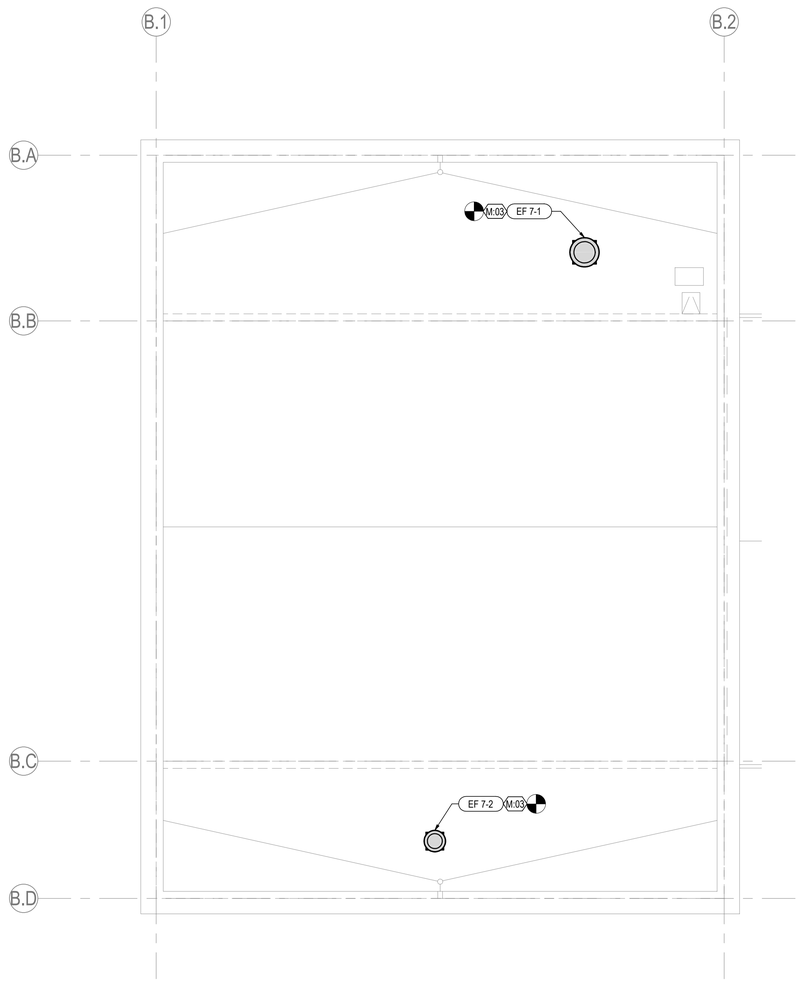

1
M-230

BUS WASH/BRAKE DYNO BUILDING MECHANICAL ROOF PLAN

3/32" = 1'-0"

N

Stantec

801 S. Figueroa Street, Suite 300
Los Angeles, CA 90017

Copyright Reserved
The Contractor shall verify and be responsible for all dimensions. DO NOT scale the drawing, any errors or omissions shall be reported to Stantec without delay.
This drawing is the property of Stantec and is not to be reproduced in whole or in part without written permission. Reproduction or use for any purpose other than that authorized by Stantec is forbidden.

REVISION	DESCRIPTION	DATE
	100% RESUBMITTAL	5/13/2024
	100% CONSTRUCTION DRAWING SUBMITTAL	3/27/2024
	90% UPDATED CONSTRUCTION SUBMITTAL	2/13/2024
	90% CONSTRUCTION DRAWING SUBMITTAL	12/07/2023

REPLACEMENT OF MECHANICAL UNITS AT SANTA ANA BUS BASE
4301 W. MAC ARTHUR BLVD., SANTA ANA, CA

BUS WASH/BRAKE DYNO BUILDING MECHANICAL ROOF PLAN

JOB #:	
DESIGN BY:	SG
DRAWN BY:	RW
CHECKED BY:	GY
DATE:	
SCALE:	As indicated
SHEET:	M-230W

LICENSED PROFESSIONAL ENGINEER
SEVAK GALSTYAN
M-39730
EXP. 02/31/25
MECHANICAL
STATE OF CALIFORNIA

OCTA

ORANGE COUNTY
TRANSPORTATION AUTHORITY
550 SOUTH MAIN STREET, ORANGE, CA

Autodesk Docs://2014233703_Santa_Ana_Bus/mech_SantaAnaBus_2014233703.rvt

5/8/2024 11:15:08 AM

CERTIFICATE OF COMPLIANCE		NRCC-MCH-E
This document is used to demonstrate compliance for mechanical systems that are within the scope of the permit application and are demonstrating compliance using the prescriptive path outlined in 140.4, or 141.0(b)2 for alterations.		
Project Name: Santa Ana Bus Station	Report Page:	(Page 1 of 9)
Project Address: 4301 W. MacArthur Blvd, Santa Ana, CA, 92704	Date Prepared:	2023-12-05T15:51:16-05:00

A. GENERAL INFORMATION

01	Project Location (city)	Santa Ana, CA	04	Total Conditioned Floor Area	265000
02	Climate Zone	8	05	Total Unconditioned Floor Area	0
03	Occupancy Types Within Project:		06	# of Stories (Habitable Above Grade)	1

• All Other Occupancies

B. PROJECT SCOPE

This table Includes mechanical systems or components that are within the scope of the permit application and are demonstrating compliance using the prescriptive path outlined in 140.4, 170.2(b) or 141.0(b)2 and 180.2(b)2 for alterations.

01		02		03	
Air System(s)		Wet System Components		Dry System Components	
☒	Heating Air System	☐	Water Economizer	☐	Air Economizer
☒	Cooling Air System	☐	Pumps	☐	Electric Resistance Heat
Mechanical Controls		☐	System Piping	☐	Fan Systems
☒	Mechanical Controls (existing to remain, altered or new)	☐	Cooling Towers	☐	Ductwork (existing to remain, altered or new)
		☐	Chillers	☐	Ventilation
		☐	Boilers	☐	Zonal Systems/ Terminal Boxes

CERTIFICATE OF COMPLIANCE		NRCC-MCH-E
Project Name: Santa Ana Bus Station	Report Page:	(Page 2 of 9)
	Date Prepared:	2023-12-05T15:51:16-05:00

C. COMPLIANCE RESULTS

Table C will indicate if the project data input into the compliance document is compliant with mechanical requirements. This table is not editable by the user. If this table says "DOES NOT COMPLY" or "COMPLIES with Exceptional Conditions" refer to Table D., or the table indicated as not compliant for guidance.

01		02		03		04		05		06		07		08	09
System Summary 110.1, 110.2, 140.4, 170.2(c)	AND	Pumps 140.4(k), 170.2(c)4I	AND	Fans/ Economizers 140.4(c), 140.4(e), 170.2(c)	AND	System Controls 110.2, 120.2, 140.4(f), 170.2(c)	AND	Ventilation 120.1, 160.2	AND	Terminal Box Controls 140.4(d), 170.2(c)4B	AND	Distribution 120.3, 140.4(l), 160.2, 160.3	AND	Cooling Towers 110.2(e)2	Compliance Results
(See Table F)		(See Table G)		(See Table H)		(See Table I)		(See Table J)		(See Table K)		(See Table L)		(See Table M)	
Yes	AND		AND		AND	Yes	AND		AND		AND		AND		COMPLIES
Mandatory Measures Compliance (See Table Q for Details)											COMPLIES				

D. EXCEPTIONAL CONDITIONS

This table is auto-filled with uneditable comments because of selections made or data entered in tables throughout the form.

E. ADDITIONAL REMARKS

This table includes remarks made by the permit applicant to the Authority Having Jurisdiction.

F. HVAC SYSTEM SUMMARY (DRY & WET SYSTEMS)

Space Conditioning System Information

01	02	03	04	05	06
System Name	Quantity	System Serving	System Status	Space Type	Utilizing Recovered Heat
RTU 4-1	1	Multi-zone			☐
RTU 4-2	1	Single zone	Alteration		☐
RTU 4-3	1	Single zone	Alteration		☐
RTU 4-4	1	Single zone	Alteration		☐

CERTIFICATE OF COMPLIANCE		NRCC-MCH-E
Project Name: Santa Ana Bus Station	Report Page:	(Page 3 of 9)
	Date Prepared:	2023-12-05T15:51:16-05:00

F. HVAC SYSTEM SUMMARY (DRY & WET SYSTEMS)

Space Conditioning System Information

01	02	03	04	05	06
System Name	Quantity	System Serving	System Status	Space Type	Utilizing Recovered Heat
RTU 5-1	1	Multi-zone			☐
RTU 5-2	1	Multi-zone			☐
RTU 6-1	1	Single zone	Alteration		☐
RTU 5-3	1	Multi-zone			☐

Dry System Equipment Sizing (includes air conditioners, condensers, heat pumps, VRF, furnaces and unit heaters and DOAS systems)

01	02	03	04	05	06	07	08	09	10	11
				Equipment Sizing per Mechanical Schedule (kBtu/h) 140.4(a&b), 170.2(c)1 & 170.2(c)2						
				Heating Output[2,3]			Cooling Output[2,3]		Load Calculations[3,4]	
Name or Item Tag	Equipment Category per Tables 110.2, 140.4(a)2 and 170.2(c)3aii	Equipment Type per Tables 110.2 and Title 20	Smallest Size Available[1] 140.4(a) and 170.2(c)1	Per Design (kBtu/h)	Rated (kBtu/h)	Supp. Heating Output (kBtu/h)	Sensible Per Design (kBtu/h)	Rated (kBtu/h)	Total Heating Load (kBtu/h)	Total Sensible Cooling Load (kBtu/h)
RTU 4-1	Furnace + AC	AC, air cooled, single pkg + warm-air central furnace, gas-fired	Yes	202	202	0	125.5	178	202	180
RTU 4-2	Furnace + AC	AC, air cooled, single pkg + warm-air central furnace, gas-fired	Yes	65	65	0	74	74	65	74
RTU 4-3	Furnace + AC	AC, air cooled, single pkg + warm-air central furnace, gas-fired	Yes	121	121	0	91	118	121	118
RTU 4-4	Furnace + AC	AC, air cooled, single pkg + warm-air central furnace, gas-fired	Yes	121	121	0	119	119	121	119
RTU 5-1	Furnace + AC	AC, air cooled, split + warm-air central furnace, gas-fired	Yes	202	202	0	149	182	202	182
RTU 5-2	Furnace + AC	AC, air cooled, single pkg + warm-air central furnace, gas-fired	Yes	202	202	0	128	179	202	179

CERTIFICATE OF COMPLIANCE		NRCC-MCH-E
Project Name: Santa Ana Bus Station	Report Page:	(Page 4 of 9)
	Date Prepared:	2023-12-05T15:51:16-05:00

F. HVAC SYSTEM SUMMARY (DRY & WET SYSTEMS)

Dry System Equipment Sizing (includes air conditioners, condensers, heat pumps, VRF, furnaces and unit heaters and DOAS systems)

01	02	03	04	05	06	07	08	09	10	11
RTU 6-1	Unitary Heat Pumps (no elec. resistance)	Air-cooled, pkg (1phase)	Yes	45	45	0	47	47	47	47
RTU 5-3	Furnace + AC	AC, air cooled, single pkg + warm-air central furnace, gas-fired	Yes	202	202	0	132	180	202	180

[1]FOOTNOTES: Equipment shall be the smallest size, within the available options of the desired equipment line, necessary to meet the design heating and cooling loads of the building per 140.4(a) and 170.2(c)1. Healthcare facilities are excepted.
[2]It is common practice to show rated output capacity on the equipment schedule. Sensible cooling output comes from specification sheet tables.
[3] If equipment is heating only, leave cooling output and load blank. If equipment is cooling only, leave heating output and load blank.
[4] Authority Having Jurisdiction may ask for load calculations used for compliance per 140.4(b) and 170.2(c).

Dry System Equipment Efficiency (other than Package Terminal Air Conditioners (PTAC) and Package Terminal Heat Pumps (PTHP), DX-DOAS and Dual Fuel Heat Pumps)

01	02	03	04	05	06	07	08	09
		Heating Mode				Cooling Mode		
Name or Item Tag	Size Category (Btu/h)	Rating Condition (°F)	Efficiency Unit	Minimum Efficiency Required per Tables 110.2 / Title 20	Design Efficiency	Efficiency Unit	Minimum Efficiency Required per Tables 110.2 / Title 20	Design Efficiency
RTU 4-1	>=135kBtuh cooling/ <225kBtuh heating		AFUE	0.8	0.81	EER IEER	10.8 14	10.8 14
RTU 4-2	>=65kBtuh cooling/ <225kBtuh heating		AFUE	0.8	0.81	EER IEER	11 14.6	11 14.6
RTU 4-3	>=65kBtuh cooling/ <225kBtuh heating		AFUE	0.8	0.81	EER IEER	11 14.6	11 14.6
RTU 4-4	>=65kBtuh cooling/ <225kBtuh heating		AFUE	0.8	0.81	EER IEER	11 14.6	11 14.6
RTU 5-1	>=135kBtuh cooling/ <225kBtuh heating		AFUE	0.8	0.81	EER IEER	10.8 14	11 14

CERTIFICATE OF COMPLIANCE		NRCC-MCH-E
Project Name: Santa Ana Bus Station	Report Page:	(Page 5 of 9)
	Date Prepared:	2023-12-05T15:51:16-05:00

F. HVAC SYSTEM SUMMARY (DRY & WET SYSTEMS)

Dry System Equipment Efficiency (other than Package Terminal Air Conditioners (PTAC) and Package Terminal Heat Pumps (PTHP), DX-DOAS and Dual Fuel Heat Pumps)

01	02	03	04	05	06	07	08	09
		Heating Mode				Cooling Mode		
Name or Item Tag	Size Category (Btu/h)	Rating Condition (°F)	Efficiency Unit	Minimum Efficiency Required per Tables 110.2 / Title 20	Design Efficiency	Efficiency Unit	Minimum Efficiency Required per Tables 110.2 / Title 20	Design Efficiency
RTU 5-2	>=135kBtuh cooling/ <225kBtuh heating		AFUE	0.8	0.81	EER IEER	10.8 14	10.8 14
RTU 6-1	<65,000		HSPF2	6.7	7	SEER2	13.4	13.4
RTU 5-3	>=135kBtuh cooling/ <225kBtuh heating		AFUE	0.8	0.81	EER IEER	10.8 14	10.8 14

G. PUMPS

This section does not apply to this project.

H. FAN SYSTEMS & AIR ECONOMIZERS

This section does not apply to this project.

CERTIFICATE OF COMPLIANCE		NRCC-MCH-E
Project Name: Santa Ana Bus Station	Report Page:	(Page 6 of 9)
	Date Prepared:	2023-12-05T15:51:16-05:00

I. SYSTEM CONTROLS

This table is used to demonstrate compliance with mandatory controls in 110.2 and 120.2 and prescriptive controls in 140.4(f) and (n), 170.2(c)4D 170.2(c)4L or requirements in 141.0(b)2E 180.2(b)2 for altered space conditioning systems.

01	02	03	04	05	06	07	08	09
System Name	System Zoning	Conditioned Floor Area Being Served (ft^2)	Thermostats 110.2(b) & (c)[1], 120.2(a) 160.3(a)2A or 141.0(b)2E & 180.2(b)2	Shut-Off Controls 120.2(e) & 160.3(a)2D	Isolation Zone Controls 120.2(g) & 160.3(a)2F	Demand Response 110.12 120.2(b) & 160.3(a)2B	Supply Air Temp. Reset 140.4(f) & 170.2(c)4D	Window Interlocks per 140.4(n) & 170.2(c)4D
BMS	Multi-zone	> 25,000 ft^2	EMCS	EMCS	EMCS	EMCS	Included	NA: No operable windows

[1]FOOTNOTES: Gravity gas wall heaters, gravity floor heaters, gravity room heaters, non-central electric heaters, fireplaces or decorative gas appliances, wood stoves are not required to have setback thermostats.

J. VENTILATION AND INDOOR AIR QUALITY

This section does not apply to this project.

K. TERMINAL BOX CONTROLS

This section does not apply to this project.

L. DISTRIBUTION (DUCTWORK and PIPING)

This section does not apply to this project.

M. COOLING TOWERS

This section does not apply to this project.

Stantec
801 S. Figueroa Street, Suite 300
Los Angeles, CA 90017

Copyright Reserved
The Contractor shall verify and be responsible for all dimensions. DO NOT scale the drawing - any errors or omissions shall be reported to Stantec without delay.
The Copyrights to all designs and drawings are the property of Stantec. Reproduction or use for any purpose other than that authorized by Stantec is forbidden.

REVISION	DESCRIPTION	DATE
	90% CONSTRUCTION DRAWING SUBMITTAL	12/07/2023
	90% UPDATED CONSTRUCTION SUBMITTAL	2/13/2024
	100% CONSTRUCTION DRAWING SUBMITTAL	3/27/2024
	100% RESUBMITTAL	5/13/2024

REPLACEMENT OF MECHANICAL UNITS AT SANTA ANA BUS BASE
4301 W. MAC ARTHUR BLVD., SANTA ANA, CA

TITLE 24 CODE COMPLIANCE

JOB #:	
DESIGN BY:	SG
DRAWN BY:	RW
CHECKED BY:	GY
DATE:	
SCALE:	
SHEET:	M-300W

LICENSED PROFESSIONAL ENGINEER SEVAK GALSTYAN M 39730 EXP. 12/31/25 MECHANICAL STATE OF CALIFORNIA

OCTA
ORANGE COUNTY TRANSPORTATION AUTHORITY
550 SOUTH MAIN STREET, ORANGE, CA

Autodesk Docs://2014233703_Santa_Ana_Bus/mech_SantaAnaBus_2014233703.rvt
5/8/2024 11:15:08 AM

STATE OF CALIFORNIA
Mechanical Systems
CALIFORNIA ENERGY COMMISSION

CERTIFICATE OF COMPLIANCE		NRCC-MCH-E
Project Name: Santa Ana Bus Station	Report Page:	(Page 7 of 9)
	Date Prepared:	2023-12-05T15:51:16-05:00

N. DECLARATION OF REQUIRED CERTIFICATES OF INSTALLATION

Selections have been made based on information provided in previous tables of this document. If any selection needs to be changed, please explain why in Table E Additional Remarks. These documents must be provided to the building inspector during construction and can be found online at https://www.energy.ca.gov/programs-and-topics/programs/building-energy-efficiency-standards/2022-building-energy-efficiency-4

Form/Title
NRCI-MCH-01-E - Must be submitted for all buildings

O. DECLARATION OF REQUIRED CERTIFICATES OF ACCEPTANCE

Selections have been made based on information provided in previous tables of this document. If any selection needs to be changed, please explain why in Table E Additional Remarks. These documents must be provided to the building inspector during construction and can be found online at https://www.energy.ca.gov/title24/2019standards/2019_compliance_documents/Nonresidential_Documents/NRCA/

Form/Title	Systems/Spaces To Be Field Verified
NRCA-MCH-16-A Supply Air Temperature Reset Controls	BMS
NRCA-MCH-18-A Energy Management Control Systems	BMS

P. DECLARATION OF REQUIRED CERTIFICATES OF VERIFICATION

There are no NRCV forms required for this project.

STATE OF CALIFORNIA
Mechanical Systems
CALIFORNIA ENERGY COMMISSION

CERTIFICATE OF COMPLIANCE		NRCC-MCH-E
Project Name: Santa Ana Bus Station	Report Page:	(Page 8 of 9)
	Date Prepared:	2023-12-05T15:51:16-05:00

Q. MANDATORY MEASURES DOCUMENTATION LOCATION

This table is used to indicate where mandatory measures are documented in the plan set or construction documentation.

01		02
Compliance with Mandatory Measures documented through MCH Mandatory Measures Note Block	No	Plan sheet or construction document location
03		04
Mandatory Measure		**Plan sheet or construction document location**
Heating Equipment Efficiency per 110.1		M-004 MECHANICAL SCHEDULES
Cooling Equipment Efficiency per 110.1		M-004 MECHANICAL SCHEDULES
Furnace Standby Loss Control per 110.2(d)		M-004 MECHANICAL SCHEDULES
Heat Pump with Supplemental electric Resistance Heater Controls per 110.2(b)		N/A

STATE OF CALIFORNIA
Mechanical Systems
CALIFORNIA ENERGY COMMISSION

CERTIFICATE OF COMPLIANCE		NRCC-MCH-E
Project Name: Santa Ana Bus Station	Report Page:	(Page 9 of 9)
Project Address: 4301 W. MacArthur Blvd, Santa Ana, CA, 92704	Date Prepared:	2023-12-05T15:51:16-05:00

DOCUMENTATION AUTHOR'S DECLARATION STATEMENT

I certify that this Certificate of Compliance documentation is accurate and complete.

Documentation Author Name: Ryan Walsh	Documentation Author Signature: Walsh, Ryan
Company: stantec	Signature Date: 12/5/2023
Address: 6385 Corporate Drive, Suite 200	CEA/ HERS Certification Identification (if applicable):
City/State/Zip: Colorado Springs, CO 80919	Phone: 860-964-0406

RESPONSIBLE PERSON'S DECLARATION STATEMENT

I certify the following under penalty of perjury, under the laws of the State of California:

1. The information provided on this Certificate of Compliance is true and correct.
2. I am eligible under Division 3 of the Business and Professions Code to accept responsibility for the building design or system design identified on this Certificate of Compliance (responsible designer)
3. The energy features and performance specifications, materials, components, and manufactured devices for the building design or system design identified on this Certificate of Compliance conform to the requirements of Title 24, Part 1 and Part 6 of the California Code of Regulations.
4. The building design features or system design features identified on this Certificate of Compliance are consistent with the information provided on other applicable compliance documents, worksheets, calculations, plans and specifications submitted to the enforcement agency for approval with this building permit application.
5. I will ensure that a completed signed copy of this Certificate of Compliance shall be made available with the building permit(s) issued for the building, and made available to the enforcement agency for all applicable inspections. I understand that a completed signed copy of this Certificate of Compliance is required to be included with the documentation the builder provides to the building owner at occupancy.

Responsible Designer Name: Ryan Walsh	Responsible Designer Signature: Walsh, Ryan
Company: stantec	Date Signed: 12/5/2023
Address: 6385 Corporate Drive, Suite 200	License: N/A
City/State/Zip: Colorado Springs, CO 80919	Phone: 860-964-0406

LICENSED PROFESSIONAL ENGINEER
SIYAR GALSTYAN
M-39730
EXP. 12/31/25
MECHANICAL
STATE OF CALIFORNIA

IFB 4-2550 EXHIBIT B

Stantec
801 S. Figueroa Street, Suite 300
Los Angeles, CA 90017

Copyright Reserved
This drawing and all ideas and size are responsible for all dimensions. DO NOT scale the drawing. Errors and or omissions shall be reported to Stantec without delay.
This drawing is the property of Stantec and shall not be reproduced in whole or in parts. Reproduction or use for any purpose other than that authorized by Stantec is forbidden.

REVISION	DESCRIPTION	DATE
	100% RESUBMITTAL	5/13/2024
	100% CONSTRUCTION DRAWING SUBMITTAL	3/27/2024
	90% UPDATED CONSTRUCTION SUBMITTAL	2/13/2024
	90% CONSTRUCTION DRAWING SUBMITTAL	12/07/2023

REPLACEMENT OF MECHANICAL UNITS AT SANTA ANA BUS BASE
4301 W. MAC ARTHUR BLVD., SANTA ANA, CA

TITLE 24 CODE COMPLIANCE

JOB #:
DESIGN BY: SG
DRAWN BY: RW
CHECKED BY: GY
DATE:
SCALE:
SHEET: M-301W

OCTA
ORANGE COUNTY TRANSPORTATION AUTHORITY
550 SOUTH MAIN STREET, ORANGE, CA

Autodesk Docs://2014233703_Santa_Ana_Bus/mech_SantaAnaBus_2014233703.rvt
5/8/2024 11:15:08 AM

CIRCUITS
EMERGENCY NORMAL

RECEPTACLES

- SINGLE RECEPTACLE, 120V
- SINGLE RECEPTACLE, 120V, CEILING MOUNTED
- DUPLEX RECEPTACLE, 120V
- DUPLEX RECEPTACLE, 120V, CEILING MOUNTED
- DOUBLE DUPLEX RECEPTACLE, 120V
- DOUBLE DUPLEX RECEPTACLE, 120V, CEILING MOUNTED
- SPLIT WIRED RECEPTACLE, 120V, TOP CONTROLLED, BOTTOM CONSTANTLY ENERGIZED
- RECEPTACLE, NEMA #
- RECEPTACLE, NEMA #, CEILING MOUNTED
- COMBINATION RECEPTACLE, NEMA # AND 120V
- FURNITURE SYSTEMS RECEPTACLE, 120V
- N/A INDICATES FULLY CONTROLLED
- N/A INDICATES 15A
- N/A INDICATES TWIST LOCK
- N/A INDICATES MOUNTED ABOVE COUNTER BACKSPLASH
- N/A MULTI-SERVICE ASSEMBLY (RECEPTACLES AS INDICATED)
- N/A MULTI-SERVICE CEILING BOX (RECEPTACLES AS INDICATED)
- N/A MULTI-SERVICE FLOOR BOX (RECEPTACLES AS INDICATED)
- N/A MULTI-SERVICE FURNITURE BOX (RECEPTACLES AS INDICATED)
- N/A MULTI-SERVICE POKE THRU (RECEPTACLES AS INDICATED)
- N/A MULTI-SERVICE POWER POLE (RECEPTACLES AS INDICATED)
- N/A MULTI-SERVICE WALL BOX (RECEPTACLES AS INDICATED)
- N/A PLUG STRIP (HORIZONTAL/VERTICAL)
- N/A CLOCK RECEPTACLE, 120V
- CORD DROP, 120V
- CEILING CORD DROP, 120V

RECEPTACLE TYPES

- A ARC FAULT CIRCUIT INTERRUPTER
- AT ARC FAULT CIRCUIT INTERRUPTER AND TAMPER RESISTANT
- D DEDICATED CIRCUIT
- G GROUND FAULT CIRCUIT INTERRUPTER
- GT GROUND FAULT CIRCUIT INTERRUPTER AND TAMPER RESISTANT
- IG ISOLATED GROUND
- S SURGE PROTECTOR
- T TAMPER RESISTANT
- U INTEGRAL USB PORT(S)
- WP WEATHER RESISTANT COVER

CONTROLS

- NON-FUSED SAFETY SWITCH
- FUSED SAFETY SWITCH, FUSE RATING INDICATED
- COMBINATION MOTOR STARTER AND FUSED SAFETY SWITCH, FUSE RATING INDICATED
- MOTOR STARTER
- MANUAL MOTOR STARTER
- AUTOMATIC DOOR PUSHPLATE
- DEAD FRONT GFCI
- EMERGENCY SHUTDOWN
- ENCLOSED CIRCUIT BREAKER
- ENCLOSED CONTACTOR
- PUSH BUTTON CONTROL STATION
- $M TOGGLE SWITCH, MOTOR RATED
- TOUCHLESS AUTOMATIC DOOR OPENER
- DDC DIRECT DIGITAL CONTROL PANEL
- R RELAY
- T THERMOSTAT
- TC TIME CLOCK
- VFD VARIABLE FREQUENCY DRIVE

WORK DEFINITION

- NEW WORK
- EXISTING
- REMOVE EXISTING
- REMOVE EXISTING ELECTRICAL EQUIPMENT
- FUTURE
- TEMPORARY, AS NOTED
- ?##/## KEY NOTE
- ??? EQUIPMENT IDENTIFICATION
- XX/X-X MECHANICAL EQUIPMENT IDENTIFICATION

RACEWAYS

- RACEWAY CONCEALED IN CEILING OR WALL. EXPOSED RACEWAY IS ALLOWED ONLY WHERE NOTED.
- RACEWAY BELOW SLAB OR UNDERGROUND
- RACEWAY UP
- RACEWAY DOWN
- RACEWAY CONTINUATION
- RACEWAY STUB-OUT WITH BUSHING
- SURFACE RACEWAY (HORIZONTAL/VERTICAL)
- J JUNCTION BOX, CEILING OR ABOVE CEILING MOUNTED
- J JUNCTION BOX, WALL MOUNTED
- J JUNCTION BOX, IN-GROUND
- PB PULL BOX

ELECTRICAL EQUIPMENT

- 208V OR 240V POWER PANELBOARD
- 480V OR 600V POWER PANELBOARD
- EQUIPMENT CABINET OR PANEL
- EQUIPMENT CONNECTION, FILL INDICATES EMERGENCY CIRCUIT
- GROUND BAR
- MOTOR CONNECTION, 1Ø
- MOTOR CONNECTION, 3Ø
- BUS DUCT
- ATS AUTOMATIC TRANSFER SWITCH
- B BUS DUCT PLUG
- SPD SURGE PROTECTIVE DEVICE
- T TRANSFORMER, NOT TO SCALE
- TRANSFORMER, DRAWN TO SCALE

ABBREVIATIONS

#/C	MULTI-CONDUCTOR, # INDICTATES QUANTITY
(D)	DEMOLISH
(E)	EXISTING
(N)	NEW
(R)	EXISTING TO BE RELOCATED
1/C	SINGLE CONDUCTOR
A	AMPS
A/C	AIR CONDITIONING UNIT
AC	ALTERNATING CURRENT
ACH	ABOVE COUNTER HEIGHT
ACT	ACOUSTICAL CEILING TILE
ADA	AMERICANS WITH DISABILITIES ACT
ADJ	ADJUSTABLE
AF	AMP FRAME
AFC	ABOVE FINISHED CEILING
AFCI	ARC FAULT CIRCUIT INTERRUPTER
AFF	ABOVE FINISHED FLOOR
AFG	ABOVE FINISHED GRADE
AHJ	AUTHORITY HAVING JURISDICTION
AHU	AIR HANDLING UNIT
AIC	AMPERE INTERRUPTING CAPACITY
AL	ALUMINUM
ALD	ASSISTED LISTENING DEVICE
ALT	ALTERNATE
ARCH	ARCHITECTURAL
AS	AMP SWITCH
AT	AMP TRIP
ATS	AUTOMATIC TRANSFER SWITCH
AUTO	AUTOMATIC
AV	AUDIO VISUAL
AVG	AVERAGE
AWG	AMERICAN WIRE GAUGE
BC	BONDING CONDUCTOR
BCU	BARE COPPER
BFC	BELOW FINISHED CEILING
BFG	BELOW FINISHED GRADE
BKR	BREAKER
BLDG	BUILDING
BOF	BOTTOM OF FIXTURE
BOH	BACK OF HOUSE
BTM	BOTTOM
C	CONDUIT
C/W	COMPLETE WITH
CAP	CAPACITY
CATV	COMMUNITY ANTENNA TELEVISION
CB	CIRCUIT BREAKER
CCTV	CLOSED CIRCUIT TELEVISION
CEC	CANADIAN ELECTRIC CODE
CFOI	CONTRACTOR FURNISHED, OWNER INSTALLED
CIRC	CIRCULATING
CKT	CIRCUIT
CL	CENTERLINE
CLG	CEIILING
CM	CEIILING MOUNTED
CMU	CONCRETE MASONRY UNIT
CO	CONDUIT ONLY
COMM	COMMUNICATIONS
CONC	CONCRETE
CONN	CONNECTION
CONST	CONSTRUCTION
CONT	CONTINUOUS
CONTR	CONTRACTOR
CPT	CONTROL POWER TRANSFORMER
CPU	CENTRAL PROCESSING UNIT
CR	CRITICAL BRANCH
CT	CURRENT TRANSFORMERS
CTR	CENTER
CU	COPPER
CUH	CABINET UNIT HEATER
D	DEDICATED
DALI	DIGITAL ADDRESSABLE LIGHTING INTERFACE
DC	DIRECT CURRENT
DET	DETAIL
DIA	DIAMETER
DIM	DIMENSION
DISC	DISCONNECT
DIV	DIVISION
DL	DAMP LOCATION
DMX	DIGITAL MULTIPLEX
DMX-RDM	DIGITAL MULTIPLEX REMOTE DEVICE MANAGEMENT
DN	DOWN
DP	DISTRIBUTION PANEL
DPDT	DOUBLE POLE, DOUBLE THROW
DPR	DAMPER
DPST	DOUBLE POLE, SINGLE THROW
DWG	DRAWING
DWH	DOMESTIC WATER HEATER
EA	EACH
EC	ELECTRICAL CONTRACTOR
EF	EXHAUST FAN
ELEC	ELECTRICAL
ELEV	ELEVATOR
EM	EMERGENCY
EM GEN	EMERGENCY GENERATOR
EMT	ELECTRICAL METALLIC TUBING
ENCL	ENCLOSURE
EP	ELECTRIC-PNEUMATIC
EPO	EMERGENCY POWER OFF
EQ	EQUIPMENT BRANCH
EQUIP	EQUIPMENT

ABBREVIATIONS

ETD	EMERGENCY TRANSFER DEVICE
EWC	ELECTRIC WATER COOLER
EXH	EXHAUST
EXP	EXPLOSION PROOF
EXTER	EXTERIOR
F&I	FURNISHED AND INSTALLED
FA	FIRE ALARM
FAA	FIRE ALARM ANNUNCIATOR
FACP	FIRE ALARM CONTROL PANEL
FB	FLOOR BOX
FCU, FC	FAN COIL UNIT
FLR	FLOOR
FLUOR	FLUORESCENT
FO	FIBER (FIBRE) OPTIC
FOH	FRONT OF HOUSE
FP	FIRE PROTECTION
FPC	FORWARD PHASE CONTROL
FS	FUSIBLE SWITCH
FSCS	FIRE FIGHTER SMOKE CONTROL STATION
FU	FUSE
FVNR	FULL VOLTAGE NON REVERSING
FVR	FULL VOLTAGE REVERSING
G, GND	GROUND
G/Y	GREEN YELLOW
GA	GAUGE
GAL	GALLONS
GC	GENERAL CONTRACTOR
GEN	GENERATOR
GFI, GFCI	GROUND FAULT (CIRCUIT) INTERRUPTER
H	HOT CONDUCTOR
HC	HORIZONTAL CROSS CONNECT
HD	HAND DRYER
HFF	HANDS FREE FIXTURE
HH	HANDHOLE
HID	HIGH INTENSITY DISCHARGE
HK	HOUSE KEEPING PAD
HM	HORIZONTALLY MOUNTED
HOA	HAND-OFF-AUTO
HOR	HORIZONTAL
HP	HEAT PUMP
HP	HORSEPOWER
HT	HEATING
HV	HIGH VOLTAGE
HVCB	HIGH VOLTAGE CIRCUIT BREAKER
HW	HOT WATER
HZ	HERTZ
IC	INTERMEDIATE CROSS CONNECT
ID	INSIDE DIAMETER
IDF	INTERMEDIATE DISTRIBUTION FRAME
IG	ISOLATED GROUND
IMC	INTERMEDIATE METAL CONDUIT
INST	INSTANTANEOUS
IP	INTERNET PROTOCOL
JB	JUNCTION BOX
K	KIRK KEY INTERLOCK
KAIC	KILO-AMPS INTERRUPTING CAPACITY
KV	KILOVOLT
KVA	KILOVOLT-AMPERES
KW	KILOWATT
LED	LIGHT EMITTING DIODE
LR	LEGALLY REQUIRED
LS	LIFE SAFETY BRANCH
LSIG	LONG TIME, SHORT TIME, INSTANTANEOUS, GROUND FAULT LIGHTING
LTG	LIGHTING
LV	LOW VOLTAGE
MAU	MAKE UP AIR UNIT
MAX	MAXIMUM
MC	METAL CLAD CABLE
MCA	MINIMUM CIRCUIT AMPS
MCB	MAIN CIRCUIT BREAKER
MCC	MOTOR CONTROL CENTER
MCCB	MOLDED CASE CIRCUIT BREAKER
MCP	MOTOR CIRCUIT PROTECTOR
MCT	MAIN CROSS CONNECT
MDF	MAIN DISTRIBUTION FRAME
MDP	MAIN DISTRIBUTION PANEL
MECH	MECHANICAL
MET	MAIN EARTHING TERMINAL
MFR	MANUFACTURER
MH	MANHOLE
MIN	MINIMUM
MISC	MISCELLANEOUS
MLO	MAIN LUG ONLY
MM	MULTIMODE FIBER (FIBRE) OPTIC STRAND
MSB	MAIN SWITCHBOARD
MTD	MOUNTED
MTG	MOUNTING
MTS	MAIN TERMINAL SPACE
MV	MEDIUM VOLTAGE
MVCB	MEDIUM VOLTAGE CIRCUIT BREAKER
MW	MICROWAVE OVEN
N	NEUTRAL
NAC	NOTIFICATION APPLIANCE CIRCUIT
NC	NORMALLY CLOSED
NEC	NATIONAL ELECTRIC CODE
NEMA	NATIONAL ELECTRICAL MANUFACTURERS ASSOCIATION

ABBREVIATIONS

NIC	NOT IN CONTRACT
NL	NIGHT LIGHT
NO	NORMALLY OPEN
NTS	NOT TO SCALE
OC	ON CENTER
OD	OUTSIDE DIAMETER
OFCI	OWNER FURNISHED, CONTRACTOR INSTALLED
OFE	OWNER FURNISHED EQUIPMENT
OH	OVERHEAD
OL	OVERLOAD
OS	OCCUPANCY SENSOR, OPTIONAL STANDBY
OSP	OUTSIDE PLANT
P	POLE
PA	PUBLIC ADDRESS
PB	PULL BOX
PD	PUNCHDOWN
PF	POWER FACTOR
PNL	PANEL
POE	POINT OF ENTRANCE
POS	POINT OF SERVICE
PR	PAIR
PT	POTENTIAL TRANSFORMERS
PTS	PNEUMATIC TUBE STATION
PTZ	PAN/TILT/ZOOM
PV	PHOTOVOLTAIC
PVC	POLYVINYL CHLORIDE
PWR	POWER
RA	RETURN AIR
REC	RECESSED
RECP	RECEPTACLE
REQD	REQUIRED
REX	REQUEST TO EXIT
RM	ROOM
RNC	RIGID NON-METALLIC CONDUIT
RO	RACEWAY ONLY
RPC	REVERSE PHASE CUT
RSC, RGS	RIGID STEEL CONDUIT
SCCR	SHORT CIRCUIT CURRENT RATING
SEC	SECURITY
SECT	SECTION
SIM	SIMILAR
SM	SINGLE MODE FIBER OPTIC STRAND
SMR	SURFACE MOUNTED RACEWAY
SPD	SURGE PROTECTED DEVICE
SPDT	SINGLE POLE DOUBLE THROW
SPECS	SPECIFICATIONS
SPST	SINGLE POLE SINGLE THROW
SS	STAINLESS STEEL
ST	SHUNT TRIP
STD	STANDARD
SW	SWITCH
SWBD	SWITCHBOARD
SWGR	SWITCHGEAR
SYS	SYSTEM
TBB	TELECOMMUNICATIONS BACKBONE
TC	TEMPERATURE CONTROL OR TERMINAL CABINET
TE	TELECOMMUNICATIONS ENCLOSURE
TELE	TELEPHONE
TELECOM	TELECOMMUNICATIONS
TEMP	TEMPERATURE
TERM	TERMINAL
TGB	TELECOMMUNICATIONS GROUND BAR
TMGB	TELECOMMUNICATIONS MAIN GROUND BAR
TOF	TOP OF FIXTURE
TP	TAMPER RESISTANT
TR	TELECOMMUNICATIONS ROOM
TSP	TWISTED SHIELDED PAIR
TSTAT	THERMOSTAT
TTB	TELECOM TERMINAL BOARD
TV	TELEVISION
TYP	TYPICAL
UG	UNDERGROUND
UH	UNIT HEATER
UNO	UNLESS NOTED OTHERWISE
UNV	UNIVERSAL VOLTAGE
UPS	UNINTERRUPTIBLE POWER SUPPLY
USB	UNIVERSAL SERIAL BUS
UTP	UNSHIELDED TWISTED PAIR
UV	UNIT VENTILATOR
V	VOLTS
VA	VOLT-AMPS
VAV	VARIABLE AIR VOLUME
VC	VOLUME CONTROL
VDT	VISUAL DISPLAY TERMINAL
VERT	VERTICAL
VFD	VARIABLE FREQUENCY DRIVE
VIF	VERIFY IN FIELD
VOL	VOLUME
VT	VAPOR TIGHT
W	WIRE, WATT
WAP	WIRELESS ACCESS POINT
WG	WIREGUARD
WL	WET LOCATION
WP	WEATHERPROOF
WT	WATERTIGHT
XFMR	TRANSFORMER
Ø, PH	PHASE

PROJECT NOTES

1. THE ELECTRICAL CONTRACTOR SHALL OBTAIN ALL NECESSARY PERMITS FROM AUTHORITIES HAVING JURISDICTION AND PAY ALL ASSOCIATED FEES.
2. LOCATE JUNCTION AND PULL BOXES AS REQUIRED TO ALLOW ACCESS AFTER EQUIPMENT AND APPURTENANCES ARE INSTALLED. COORDINATE EXACT LOCATIONS WITH THE OTHER TRADES. COORDINATE LOCATIONS AND ELEVATIONS OF ELECTRICAL DEVICES WITH DRAWINGS AND OTHER TRADES PRIOR TO INSTALLATION.
3. PROTECT PERMANENT BUILDING FINISHES FROM DAMAGE DURING CONSTRUCTION PERIOD. PROVIDE PLYWOOD OR SIMILAR MATERIAL UNDER EQUIPMENT OR MATERIALS STORED ON FLOORS, AND IN AREAS WHERE CONSTRUCTION MAY DAMAGE FINISHES. SURFACES OR FINISHES DAMAGED DURING CONSTRUCTION SHALL BE REPLACED AT THE COST OF THE CONTRACTOR AT FAULT.
4. CONTRACTORS SHALL COORDINATE LOCATIONS OF FIXTURES AND ELECTRICAL DEVICES INSTALLED IN OR ON THE CEILING WITH ARCHITECTURAL REFLECTED CEILING PLAN. CEILING MOUNTED ELECTRICAL DEVICES SHALL BE MOUNTED IN THE CENTER OF THE CEILING TILES, UNLESS OTHERWISE NOTED.
5. WHERE DIRECTED TO USE OR RETAIN EXISTING CIRCUITS, AND THE CIRCUIT NUMBERS DIFFER FROM THE DRAWING, UPDATE DIRECTORIES AND RECORD DRAWINGS.
6. PROPERLY SUPPORT PER CODE LOW VOLTAGE CABLING NOT IN CONDUIT. IN AREAS SUCH AS CORRIDORS DESIGNATED FOR NEW CEILINGS AND FINISHES, SUPPORT EXISTING ELECTRICAL DEVICES AND EQUIPMENT IN AND ABOVE THE CEILING, INCLUDING CONDUIT AND CABLING. PROVIDE PROPER PERMANENT SUPPORT AS NEEDED TO COMPLY WITH CODE AND TAKE WEIGHT OFF CEILING SUPPORTS. REMOVE AND REINSTALL ELECTRICAL DEVICES AND EQUIPMENT AS NEEDED FOR PAINTING, WALL COVERINGS, CEILINGS, AND FINISH WORK. REFER TO ARCHITECTURAL DRAWINGS. LOW VOLTAGE CABLING LOCATED IN EXPOSED STRUCTURE (CEIILING) AREAS SHALL BE INSTALLED IN CONDUIT (OR CABLE TRAY, IF APPLICABLE) AND ROUTED TIGHT TO DECK. INSTALLATIONS NOT IN COMPLIANCE WITH THIS REQUIREMENT SHALL BE REMOVED AND REINSTALLED AT CONTRACTOR'S EXPENSE.
7. WHERE PROJECT PHASING IS INDICATED IN ANY PART OF THE WORKING DOCUMENT PACKAGE, ELECTRICAL CONTRACTOR IS TO PLAN WORK SO AS TO FACILITATE SUCH PHASING.
8. FOR BRANCH CIRCUITS OVER 75' (25 METERS) IN LENGTH (TOTAL ONE WAY) FROM THE PANEL, THE ELECTRICAL CONTRACTOR SHALL CALCULATE THE VOLTAGE DROP AND PROVIDE AN APPROPRIATE CONDUCTOR SIZE TO ACHIEVE NO MORE THAN 3% MAXIMUM ALLOWABLE VOLTAGE DROP.
9. DO NOT SCALE THE DRAWINGS. BECAUSE OF THE SCALE OF THE DRAWINGS, IT IS NOT POSSIBLE TO INDICATE ALL OFFSETS, FITTINGS OR OTHER SIMILAR ITEMS WHICH MAY BE REQUIRED TO MAKE A COMPLETE OPERATING SYSTEM. CAREFULLY INVESTIGATE CONDITIONS AFFECTING WORK AND INSTALL WORK IN SUCH MANNER THAT INTERFERENCES BETWEEN PIPES, CONDUITS, DUCTS, EQUIPMENT, ARCHITECTURAL AND STRUCTURAL FEATURES SHALL BE AVOIDED.

PROJECT DEMOLITION NOTES

1. ANY EXISTING WIRING SERVING DEVICES TO REMAIN IN SERVICE, AND WHICH IS INTERRUPTED BY WORK PERFORMED UNDER THIS CONTRACT, SHALL BE REROUTED TO MAINTAIN CIRCUIT CONTINUITY. ALL EXISTING SYSTEMS/DEVICES TO REMAIN. PRIOR TO COMMENCING WITH DEMOLITION, IDENTIFY ALL POWER, LIGHTING, COMMUNICATION, AND SIGNAL CIRCUITS PASSING THROUGH THE DEMOLITION AREA OR EXTENDING BEYOND THE DEMOLITION AREA. COORDINATE WITH DEMOLITION WORK OF OTHER TRADES.
2. THE EXISTING BUILDING MUST BE KEPT IN OPERATION AT ALL TIMES. MAINTAIN ELECTRICAL SERVICES AND SYSTEMS EXCEPT FOR EQUIPMENT BEING REPLACED BY THIS PROJECT. MAINTAIN CONTINUITY OF FIRE ALARM, LIFE SAFETY AND SECURITY SYSTEMS TO ALL OCCUPIED AREAS OF THE BUILDING THROUGHOUT THE CONSTRUCTION PERIOD. PROVIDE TEMPORARY WIRING AND BRANCH CIRCUITING AS NECESSARY TO MAINTAIN OPERATION OF EXISTING CIRCUITS AND SYSTEMS EXTENDING BEYOND REMODEL AREA. ASSUME FULL RESPONSIBILITY FOR ANY DISRUPTION TO EXISTING SERVICES. RECONNECT ANY SERVICES WHICH ARE TO REMAIN, AND WHICH HAVE BEEN DISCONNECTED DURING DEMOLITION OR CONSTRUCTION. ARRANGE WORK IN SUCH A MANNER THAT INTERRUPTIONS IN SERVICES OCCUR ONLY AT PRE-SCHEDULED TIMES. CARRY OUT THE WORK WITH A MINIMUM OF NOISE, DUST AND DISTURBANCE.
3. PERMANENTLY REMOVE ABANDONED ELECTRICAL EQUIPMENT, LIGHTING FIXTURES, ELECTRICAL DEVICES, POWER AND SIGNALLING WIRING DEVICES AND ASSOCIATED WIRE, RACEWAYS, AND/OR JUNCTION BOXES. THE REMOVAL OR RELOCATION OF EXISTING ELECTRICAL EQUIPMENT PRESENTLY CONCEALED IN EXISTING CONSTRUCTION SHALL BE COORDINATED WITH THE OWNER PRIOR TO REMOVAL OR RELOCATION. RACEWAYS AND CONDUCTORS SHALL BE REMOVED BACK TO THE SOURCE OR NEAREST REMAINING JUNCTION BOX OR DEVICE AS FAR AS PRACTICAL, OR WHERE COMPLETE REMOVAL NOT PRACTICAL, RENDERED PERMANENTLY SAFE.
4. ANY EXISTING SYSTEM OUTAGES SHALL BE OF MINIMUM DURATION AND AT A TIME ACCEPTABLE TO THE OWNER, ARRANGED A MINIMUM OF 10 WORKING DAYS IN ADVANCE. LONGER NOTICES AND/OR ADDITIONAL RESTRICTIONS PERTAINING TO OUTAGES MAY BE REQUIRED IN SOME INSTANCES, AS PER SPECIFICATIONS. VERIFY PROTOCOL WITH ALL PROJECT STAKEHOLDERS INCLUDING OWNER, TENANT, CONSTRUCTION MANAGER AND/OR USER GROUP(S) AS APPLICABLE.
5. ELECTRICAL EQUIPMENT, FIXTURES, AND/OR DEVICES SCHEDULED TO REMAIN OR TO BE RELOCATED THAT ARE DAMAGED DURING DEMOLITION SHALL BE REPLACED WITH SIMILAR TYPE AS APPROVED BY THE OWNER, AT NO ADDITIONAL CHARGE TO THE OWNER.
6. IN THE EVENT THAT DEMOLITION WORK AFFECTS THE STRUCTURAL SUPPORT OF EXISTING ELECTRICAL EQUIPMENT THAT IS TO REMAIN IN SERVICE, IT SHALL BE RE-SUPPORTED IN ACCORDANCE WITH ALL APPLICABLE CODES. PROVIDE TEMPORARY SUPPORTS WHERE REQUIRED.
7. UNUSED FLUSH MOUNTED DEVICES, OUTLET AND OTHER BOXES IN FINISHED AREAS SHALL BE REMOVED FROM WALL AND THE REMAINING HOLE PATCHED TO MATCH ADJACENT WALL SURFACES. UNUSED RACEWAYS AND SLEEVES SHALL BE CUT FLUSH AT CEILING, FLOOR OR WALL AND FILLED WITH GROUT OR REQUIRED FIRE SEALANT. UNUSED RACEWAYS ABOVE ACCESSIBLE CEILINGS SHALL BE REMOVED.
8. ELECTRICAL MATERIAL SCHEDULED FOR REMOVAL IS TO BE REMOVED FROM THE SITE AND PROPERLY DISPOSED OF AS PART OF THIS CONTRACT. ANY ELECTRICAL MATERIAL THE OWNER WISHES TO RETAIN TO BECOME THE PROPERTY OF THE OWNER AND TO BE REMOVED AND PLACED AT A LOCATION ON THE SITE AS DIRECTED BY THE OWNER.
9. THE DEMOLITION DRAWINGS SHOW THE GENERAL SCOPE OF THE DEMOLITION AND NOT EXACT DETAILS OR TOTAL EXTENT. FOR EXACT DETAILS AND TOTAL EXTENT, EACH SERVICE MUST BE CAREFULLY CHECKED ON SITE. BEFORE REMOVING SERVICES FOLLOW THE SERVICE THROUGH TO ENSURE OTHER AREAS OF THE BUILDING ARE NOT AFFECTED.

NEW THERMOSTATS FOR ALL NEW MECHANICAL UNITS ARE GOING TO BE PROVIDED BY MECHANICAL.
REFER TO GENERAL NOTES ON MECHANICAL SET OF DRAWINGS.

REGISTERED PROFESSIONAL ENGINEER
PAUL K. ERICSON
No. 11219
exp.06/30/2025
ELECTRICAL
STATE OF CALIFORNIA

05-13-2024

IFB 4-2550 EXHIBIT B

Stantec
801 S. Figueroa Street, Suite 300
Los Angeles, CA 90017

Copyright Reserved
The contractor shall verify and be responsible for all dimensions. DO NOT scale the drawing - any errors or omissions shall be reported to Stantec without delay.
The copyrights to all designs and drawings are the property of Stantec. Reproduction or use for any purpose other than that authorized by Stantec is prohibited.

REVISION	DESCRIPTION	DATE
4	100% RESUBMITTAL	05/13/2024
3	100% CONSTRUCTION DRAWING SUBMITTAL	03/27/2024
2	90% UPDATED CONSTRUCTION SUBMITTAL	02/13/2024
1	90% CONSTRUCTION DRAWING SUBMITTAL	12/07/2023

REPLACEMENT OF MECHANICAL UNITS AT SANTA ANA BUS BASE
4301 W. MAC ARTHUR BLVD., SANTA ANA, CA

SYMBOLS, NOTES AND ANNOTATIONS

JOB #:	
DESIGN BY:	IZ
DRAWN BY:	ERL
CHECKED BY:	PKE
DATE:	02/13/2024
SCALE:	12" = 1'-0"
SHEET:	E-001W

OCTA
ORANGE COUNTY TRANSPORTATION AUTHORITY
550 SOUTH MAIN STREET, ORANGE, CA

Autodesk Docs://2014233703_Santa_Ana_Bus/elec_SantaAnaBus_2014233703.rvt

5/8/2024 9:59:41 AM

SCHEMATICS

CABLE IDENTIFICATION, TABLE

C01 — CIRCUIT IDENTIFICATION, SEE FEEDER TABLE
- A = ALUMINUM
- C = COPPER
- M = METAL CLAD

3 — QUANTITY OF GROUND CONDUCTORS, SIZE PER FEEDER TABLE
- 0 = NOT REQUIRED
- 1 = 1 GROUND CONDUCTOR
- 2 = 1 GROUND CONDUCTOR AND 1 ISOLATED GROUND CONDUCTOR

1 — QUANTITY OF NEUTRAL CONDUCTORS, SIZE PER FEEDER TABLE
- 0 = NOT REQUIRED
- 1 = 1 NEUTRAL CONDUCTOR
- 2 = 2 NEUTRAL CONDUCTORS

1 — QUANTITY OF PHASE CONDUCTORS, SIZE PER FEEDER TABLE

CABLE IDENTIFICATION, TEXT

4 #12+ 1 #12G, [SIZE]C
- CONDUIT SIZE
- QUANTITY AND SIZE OF GROUNDS
- QUANTITY AND SIZE OF CONDUCTORS

CABLE IDENTIFICATION, TEXT

4 SETS (3×1/C 600 kcmil +1 #3/0G, Cu, 15kV, 133%, TR-XLPE, [SIZE]C)
- CONDUIT SIZE
- CABLE TYPE
- INSULATION LEVEL
- INSULATION VOLTS
- MATERIAL
- QUANTITY AND SIZE OF GROUNDS
- QUANTITY AND SIZE OF CONDUCTORS
- QUANTITY OF SETS

#×1/C — SINGLE CONDUCTOR CABLE, # INDICATES QUANTITY OF CABLES

#/C — MULTI-CONDUCTOR CABLE, # INDICATES QUANTITY OF CONDUCTORS

— SHORT CIRCUIT CURRENT RATING, # INDICATES RATING

BUS DUCT

BUS

FEEDER

NAME	NAME	NAME	NAME	NAME
LOCATION	LOCATION		LOCATION	LOCATION
225 A MCB	225 A MCB		225 A MCB	225 A MCB
480 V	480 V		480 V	480 V
3 Ø, 4 W	3 Ø, 4 W		3 Ø, 4 W	3 Ø, 4 W
42 CCT	42 CCT		42 CCT	42 CCT
PANEL, SINGLE TUB	PANEL, DOUBLE TUB, MAIN LUGS		PANEL, DOUBLE TUB, FEED THRU LUGS	

SCHEMATICS

- AC/DC INVERTER
- AUTOTRANSFORMER
- AUTOMATIC TRANSFER SWITCH, DUAL BYPASS
- AUTOMATIC TRANSFER SWITCH, SINGLE BYPASS
- BATTERY
- BIMETALLIC THERMAL OVERLOAD
- CAPACITOR
- CIRCUIT BREAKER, LOW VOLTAGE, DRAW OUT
- CIRCUIT BREAKER, LOW VOLTAGE, FIXED
- CIRCUIT BREAKER, LOW VOLTAGE, WITH LIMITER
- CIRCUIT BREAKER, MEDIUM VOLTAGE, DRAW OUT
- CIRCUIT BREAKER, MEDIUM VOLTAGE, FIXED
- CIRCUIT BREAKER, MEDIUM VOLTAGE, VACUUM INTERRUPTER
- CONNECTION, CONNECTED
- CONNECTION, DRAW OUT, DISCONNECTED
- CONNECTION, FEED FROM/TO
- CONNECTION, SPLICE
- CONTACT
- CURRENT TRANSFORMER
- DEAD BREAK ELBOW
- DRAW OUT FUSE AND POTENTIAL TRANSFORMER
- FUSE
- FUSED CUTOUT
- GROUND
- GROUND STUD
- INDUCTOR
- LIGHTNING ARRESTOR, GAP TYPE
- LIGHTNING ARRESTOR, MOV TYPE
- LOAD BREAK ELBOW
- NOT CONNECTED
- POTENTIAL TRANSFORMER
- POTHEAD
- STRESS CONE
- SWITCH, FUSED LOAD BREAK
- SWITCH, NON-FUSED LOAD BREAK
- SWITCH, NON-FUSED DOUBLE LOAD BREAK
- SWITCH, NON-FUSED LOAD BREAK WITH GROUNDING POSITION
- RESISTOR
- ? TERMINAL BLOCK

SCHEMATICS

- TRANSFER SWITCH
- TRANSFORMER
- TRANSFORMER CONFIGURATION, DELTA
- TRANSFORMER CONFIGURATION, DELTA, CORNER GROUND
- TRANSFORMER CONFIGURATION, DELTA, OPEN
- TRANSFORMER CONFIGURATION, WYE
- TRANSFORMER CONFIGURATION, WYE, INDUCTOR, CURRENT TRANSFORMER, GROUND
- TRANSFORMER CONFIGURATION, WYE, RESISTOR, CURRENT TRANSFORMER, GROUND
- TRANSFORMER CONFIGURATION, WYE, RESISTOR, GROUND
- TRANSFORMER CONFIGURATION, WYE, SOLID GROUND
- TRANSFORMER CONFIGURATION, ZIGZAG
- ZERO SEQUENCE CURRENT TRANSFORMER
- 50 — RELAY, SINGLE FUNCTION
- 50/51 — RELAY, DUAL FUNCTION
- 50 50 50 50 50 50 — RELAY, MULTIFUNCTION
- A — AMMETER
- AS — AMPERAGE METER SWITCH
- DMS — DIGITAL METERING SYSTEM
- G — GENERATOR
- K — KEY OPERATED SWITCH
- LSIG — RELAY, TRIP UNIT
- LSIG — DRAW OUT BREAKER C/W INTEGRAL SOLID STATE TRIP UNIT
- LSIG — DRAW OUT BREAKER C/W SERIES ELECTROMECHANICAL TRIP UNIT
- M — INLINE SOCKET METER
- METER — METER
- O/L — ELECTRONIC THERMAL OVERLOAD
- SB — SHORTING BLOCK
- SPACE — SPACE, DRAW OUT BREAKER
- SPACE — SPACE, FIXED BREAKER
- SPD — SURGE PROTECTION DEVICE
- TS — TEST SWITCH
- V — VOLTMETER
- VS — VOLTAGE METER SWITCH
- X — INDICATOR, VOLTAGE PRESENT

STANDARD MOUNTING HEIGHTS

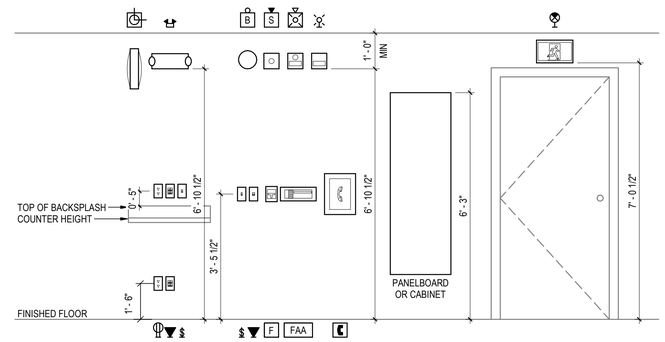

DRAWING INDEX

NO.	DRAWING NAME
E-001	SYMBOLS, NOTES AND ANNOTATIONS
E-002	SCHEMATIC SYMBOLS AND ELECTRICAL DRAWING INDEX
E-210	OPERATIONS BUILDING ELECTRICAL ROOF PLAN
E-220	MAINTENANCE BUILDING OVERALL ELECTRICAL ROOF PLAN
E-221	MAINTENANCE BUILDING SECTION ONE ELECTRICAL ROOF PLAN
E-222	MAINTENANCE BUILDING SECTION TWO ELECTRICAL ROOF PLAN
E-223	MAINTENANCE BUILDING SECTION THREE ELECTRICAL ROOF PLAN
E-230	FUEL/BRAKE/TIRE REPAIR BUILDING ELECTRICAL ROOF PLAN
E-240	BUS WASH/BRAKE DYNO BUILDING ELECTRICAL ROOF PLAN
E-250	DETAIL/CLEANING BUILDING ELECTRICAL ROOF PLAN
E-600	ELECTRICAL SINGLE LINE DIAGRAM
E-601	ELECTRICAL SINGLE LINE DIAGRAM
E-700	PANEL SCHEDULES
E-701	PANEL SCHEDULES
E-702	PANEL SCHEDULES
E-703	PANEL SCHEDULES
E-704	PANEL SCHEDULES
E-800	CONDUIT SCHEDULES
E-801	CONDUIT SCHEDULES
E-802	CONDUIT SCHEDULES

ALUMINUM FEEDERS

ID	NOMINAL CIRCUIT RATING	SETS	CONDUCTORS	GROUND	CONDUIT W/ N (4W)	CONDUIT W/O N (3W)
A01	100	1	#1/0	#6	2"	2"
A02	125	1	#2/0	#4	2"	2"
A03	150	1	#3/0	#4	2"	2"
A04	175	1	#4/0	#4	2 1/2"	2"
A05	200	1	250 kcmil	#4	2 1/2"	2 1/2"
A06	225	1	350 kcmil	#2	3"	2 1/2"
A07	250	1	350 kcmil	#2	3"	2 1/2"
A08	300	1	500 kcmil	#2	3 1/2"	3"
A09	350	1	750 kcmil	#1	4"	3 1/2"
A10	400	2	250 kcmil	#1	2 1/2"	2 1/2"
A11	450	2	350 kcmil	#1/0	3"	2 1/2"
A12	500	2	350 kcmil	#1/0	3"	2 1/2"
A13	600	2	500 kcmil	#2/0	3 1/2"	3"
A14	800	3	350 kcmil	#3/0	3"	3"
A15	900	3	500 kcmil	#4/0	3 1/2"	3"
A16	1000	3	600 kcmil	#4/0	4"	4"
A17	1200	4	500 kcmil	250 kcmil	3 1/2"	3"
A18	1600	6	400 kcmil	350 kcmil	3"	2 1/2"
A19	2000	6	750 kcmil	500 kcmil	4"	4"
A20	2500	7	750 kcmil	750 kcmil	5"	4"
A21	3000	8	750 kcmil	750 kcmil	5"	4"
A22	4000	11	750 kcmil	750 kcmil	5"	4"

FEEDER GENERAL NOTES:

1. COPPER CONDUCTORS ARE BASED ON TYPE THHN/THWN COPPER CONDUCTORS ONLY. CONDUITS BASED ON THHN/THWN CONDUCTORS ONLY. OTHER CONDUCTORS MAY REQUIRE LARGER CONDUITS.
2. ALUMINUM CONDUCTORS ARE BASED ON TYPE XHHN COMPACT STRANDED ALUMINUM CONDUCTORS ONLY. CONDUITS BASED ON XHHN CONDUCTORS ONLY. OTHER CONDUCTORS MAY REQUIRE LARGER CONDUITS.

COPPER FEEDERS

ID	NOMINAL CIRCUIT RATING	SETS	CONDUCTORS	BOND	CONDUIT W/ NEUTRAL (4W)	CONDUIT W/O NEUTRAL (3W)	MAXIMUM LENGTH*
C01	20	1	#12	#12	3/4"	3/4"	
C02	30	1	#10	#12	3/4"	3/4"	
C03	40	1	#8	#10	3/4"	3/4"	
C04	50	1	#6	#10	1"	3/4"	
C05A	60	1	#4	#10	1"	1"	*BASED ON 75 DEGREE
C05B	60	1	#4	#10	1 1/4"	1 1/4"	*BASED ON 60 DEGREE
C06	70	1	#4	#8	1 1/4"	1 1/4"	
C07A	80	1	#4	#8	1 1/4"	1 1/4"	*BASED ON 75 DEGREE
C07B	80	1	#3	#8	1 1/4"	1 1/4"	*BASED ON 60 DEGREE
C08	90	1	#3	#8	1 1/4"	1 1/4"	
C09A	100	1	#3	#8	1 1/4"	1 1/4"	*BASED ON 75 DEGREE
C09B	100	1	#1	#6	1 1/2"	1 1/2"	*BASED ON 60 DEGREE
C10	125	1	#1	#6	1 1/2"	1 1/2"	
C11	150	1	#1/0	#6	2"	1 1/2"	
C12	175	1	#2/0	#6	2"	2"	
C13	200	1	#3/0	#6	2"	2"	
C14	225	1	#4/0	#4	2 1/2"	2"	
C15	250	1	250 kcmil	#4	2 1/2"	2 1/2"	
C16	300	1	350 kcmil	#3	3"	2 1/2"	
C17	350	1	500 kcmil	#3	3 1/2"	3"	
C18	400	2	#3/0	#6	2"	2"	
C19	450	2	#4/0	#4	2 1/2"	2"	
C20	500	2	250 kcmil	#4	2 1/2"	2 1/2"	
C21	600	2	350 kcmil	#3	3"	2 1/2"	
C22A	800	3	350 kcmil	#3	3"	2 1/2"	
C22B	800	4	#3/0	#6	2"	2"	
C23	900	3	350 kcmil	#3	3"	2 1/2"	
C24	1000	3	500 kcmil	#3	3 1/2"	3"	
C25	1200	4	350 kcmil	#3	3"	2 1/2"	
C26	1600	5	500 kcmil	#3	3 1/2"	3"	
C27	2000	6	500 kcmil	#3	3 1/2"	3"	
C28	2500	7	500 kcmil	#3	3 1/2"	3"	
C29	3000	8	500 kcmil	#3	3 1/2"	3"	
C30	4000	11	500 kcmil	#3	3 1/2"	3"	

Stantec
801 S. Figueroa Street, Suite 300
Los Angeles, CA 90017

Copyright Reserved
The contractor shall verify and be responsible for all dimensions. DO NOT scale the drawing, any errors or omissions shall be reported to Stantec without delay.
The copyrights to all designs and drawings are the property of Stantec. Reproduction or use for any purpose other than that authorized by Stantec is prohibited.

REVISION	DESCRIPTION	DATE
4	100% RESUBMITTAL	05/13/2024
3	100% CONSTRUCTION DRAWING SUBMITTAL	03/27/2024
2	90% UPDATED CONSTRUCTION SUBMITTAL	02/13/2024
1	90% CONSTRUCTION DRAWING SUBMITTAL	12/07/2023

REPLACEMENT OF MECHANICAL UNITS AT SANTA ANA BUS BASE

4301 W. MAC ARTHUR BLVD., SANTA ANA, CA

SCHEMATIC SYMBOLS AND ELECTRICAL DRAWING INDEX

JOB #:	
DESIGN BY:	IZ
DRAWN BY:	ERL
CHECKED BY:	PKE
DATE:	02/13/2024
SCALE:	As indicated
SHEET:	E-002W

REGISTERED PROFESSIONAL ENGINEER
PAUL K. ERICSON
No. 11219
exp.06/30/2025
ELECTRICAL
STATE OF CALIFORNIA

05-13-2024

OCTA
ORANGE COUNTY TRANSPORTATION AUTHORITY
550 SOUTH MAIN STREET, ORANGE, CA

Autodesk Docs://2014233703_Santa_Ana_Bus/elec_SantaAnaBus_2014233703.rvt

5/8/2024 9:59:42 AM

IFB 4-2550 EXHIBIT B

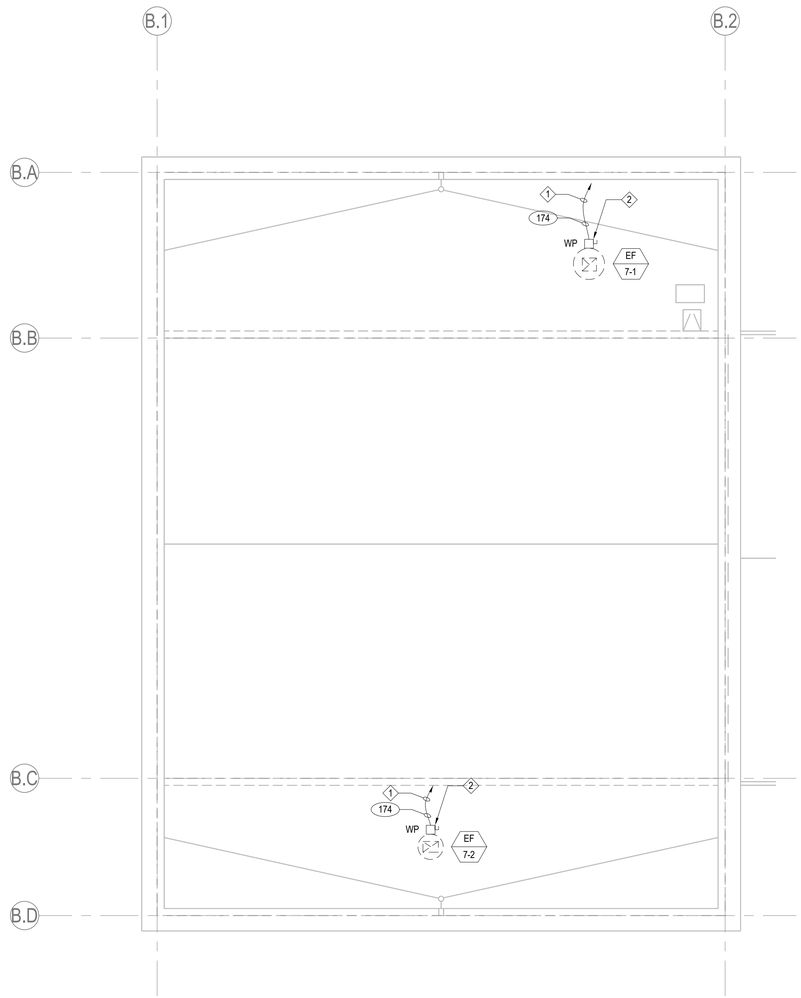

1 E-240 **BUS WASH/BRAKE DYNO BUILDING ELECTRICAL ROOF PLAN**

3/32" = 1'-0"

N

GENERAL NOTES

1. ALL THE SIZES OF ELECTRICAL DISCONNECT SWITCHES, MOTOR RATED SWITCHES, CONDUIT AND WIRE SIZES FOR THE MECHANICAL EQUIPMENT ARE BASED ON NEW MECHANICAL EQUIPMENT THAT IS GOING TO BE INSTALLED.
2. ALL ELECTRICAL EQUIPMENT INSTALLED OUTDOORS SHALL BE IN WEATHER PROOF ENCLOSURES PER CEC 406.
3. REFER TO SHEETS E-800, E-801 AND E-802 CONDUIT SCHEDULES FOR VOLTAGE, PHASE, CONDUIT AND WIRE SIZES FOR ALL MECHANICAL EQUIPMENT BEING REPLACED.
4. NEW DISCONNECT SWITCHES TO BE PROVIDED AND INSTALLED TO MATCH EXISTING CONDITIONS.
5. KEY NOTES ARE PER SHEET NOT PER PROJECT.

KEY NOTES:

1 CONNECT EXHAUST FAN VIA MOTOR STARTER IN BRAKE DYNO.

2 PROVIDE NEW 480V, 3PH, 30A DS, 15AF. CONNECT TO EXISTING CIRCUIT AS INDICATED, RE-USE EXISTING CONDUIT AND PROVIDE NEW CONDUCTORS TO MATCH EXISTING.

REGISTERED PROFESSIONAL ENGINEER
PAUL K. ERICSON
No. 11219
exp.06/30/2025
ELECTRICAL
STATE OF CALIFORNIA

05-13-2024

Stantec
801 S. Figueroa Street, Suite 300
Los Angeles, CA 90017

Copyright Reserved
The Contractor shall verify and be responsible for all dimensions. DO NOT scale the drawing - any errors or omissions shall be reported to Stantec without delay.
The Copyright to all designs and drawings are the property of Stantec. Reproduction or use for any purpose other than that authorized by Stantec is forbidden.

REVISION	DESCRIPTION	DATE
4	100% RESUBMITTAL	05/13/2024
3	100% CONSTRUCTION DRAWING SUBMITTAL	03/27/2024
2	90% UPDATED CONSTRUCTION SUBMITTAL	02/13/2024
1	90% CONSTRUCTION DRAWING SUBMITTAL	12/07/2023

REPLACEMENT OF MECHANICAL UNITS AT SANTA ANA BUS BASE
4301 W. MAC ARTHUR BLVD., SANTA ANA, CA

BUS WASH/BRAKE DYNO BUILDING ELECTRICAL ROOF PLAN

JOB #:	
DESIGN BY:	IZ
DRAWN BY:	ERL
CHECKED BY:	PKE
DATE:	02/13/2024
SCALE:	As indicated
SHEET:	E-240W

OCTA
ORANGE COUNTY TRANSPORTATION AUTHORITY
550 SOUTH MAIN STREET, ORANGE, CA

Autodesk Docs://2014233703_Santa_Ana_Bus/elec_SantaAnaBus_2014233703.rvt

5/8/2024 9:59:45 AM

IFB 4-2550 EXHIBIT B

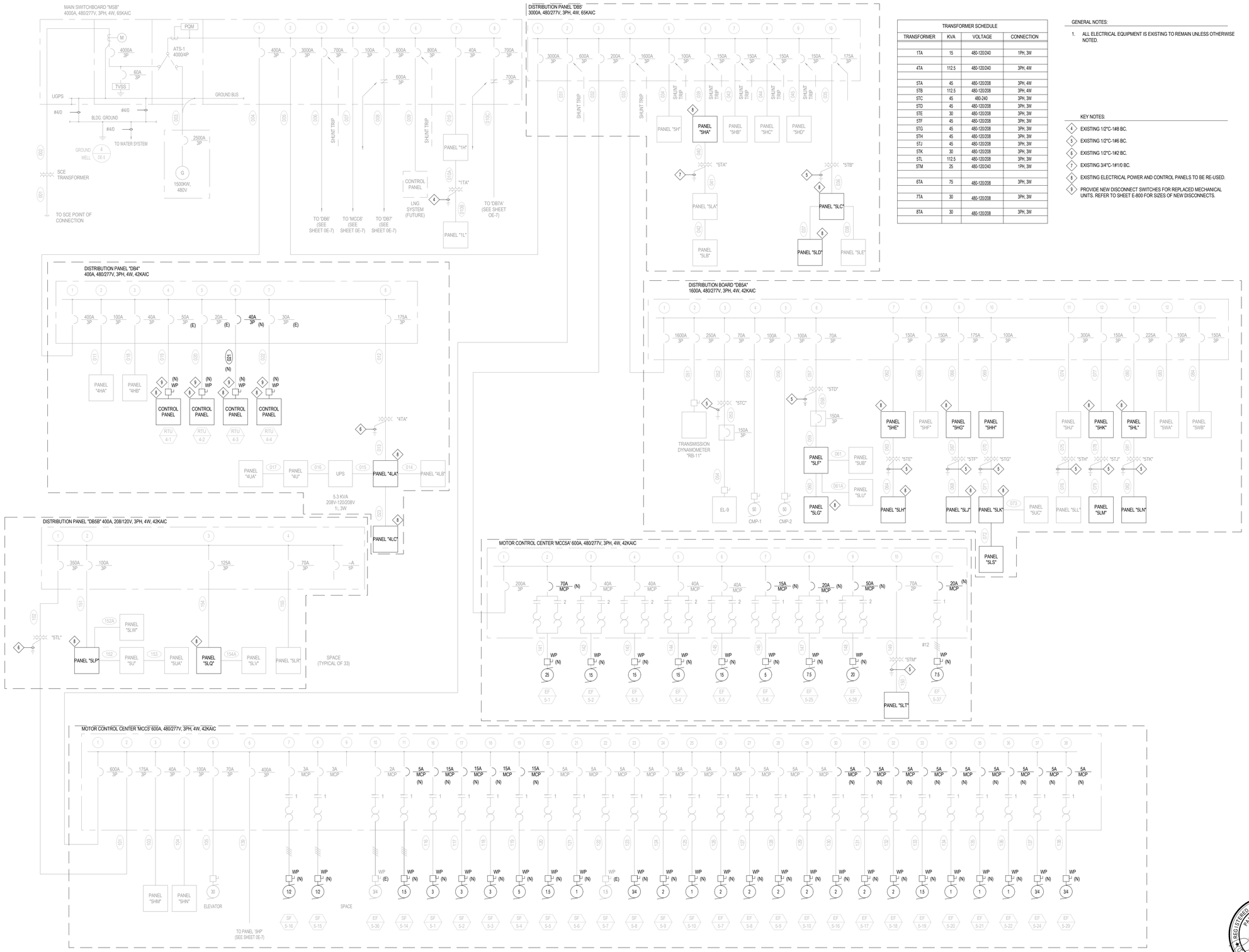

TRANSFORMER SCHEDULE			
TRANSFORMER	KVA	VOLTAGE	CONNECTION
1TA	15	480-120/240	1PH, 3W
4TA	112.5	480-120/240	3PH, 4W
5TA	45	480-120/208	3PH, 4W
5TB	112.5	480-120/208	3PH, 4W
5TC	45	480-240	3PH, 3W
5TD	45	480-120/208	3PH, 3W
5TE	30	480-120/208	3PH, 3W
5TF	45	480-120/208	3PH, 3W
5TG	45	480-120/208	3PH, 3W
5TH	45	480-120/208	3PH, 3W
5TJ	45	480-120/208	3PH, 3W
5TK	30	480-120/208	3PH, 3W
5TL	112.5	480-120/208	3PH, 3W
5TM	25	480-120/240	1PH, 3W
6TA	75	480-120/208	3PH, 3W
7TA	30	480-120/208	3PH, 3W
8TA	30	480-120/208	3PH, 3W

GENERAL NOTES:

1. ALL ELECTRICAL EQUIPMENT IS EXISTING TO REMAIN UNLESS OTHERWISE NOTED.

KEY NOTES:

4. EXISTING 1/2"C-1#8 BC.
5. EXISTING 1/2"C-1#6 BC.
6. EXISTING 1/2"C-1#2 BC.
7. EXISTING 3/4"C-1#1/0 BC.
8. EXISTING ELECTRICAL POWER AND CONTROL PANELS TO BE RE-USED.
9. PROVIDE NEW DISCONNECT SWITCHES FOR REPLACED MECHANICAL UNITS. REFER TO SHEET E-800 FOR SIZES OF NEW DISCONNECTS.

Stantec
801 S. Figueroa Street, Suite 300
Los Angeles, CA 90017

Copyright Reserved
The Contractor shall verify and be responsible for all dimensions. DO NOT scale the drawing - any errors or omissions shall be reported to Stantec without delay.
The Copyright Reserved shall be retained by the Stantec Corporation. Reproduction or use for any purpose other than that authorized by Stantec is forbidden.

REVISION	DESCRIPTION	DATE
4	100% RESUBMITTAL	05/13/2024
3	100% CONSTRUCTION DRAWING SUBMITTAL	03/27/2024
2	90% UPDATED CONSTRUCTION SUBMITTAL	02/13/2024
1	90% CONSTRUCTION DRAWING SUBMITTAL	12/07/2023

REPLACEMENT OF MECHANICAL UNITS AT SANTA ANA BUS BASE
4301 W. MAC ARTHUR BLVD., SANTA ANA, CA

ELECTRICAL SINGLE LINE DIAGRAM

JOB #:	
DESIGN BY:	IZ
DRAWN BY:	ERL
CHECKED BY:	PKE
DATE:	02/13/2024
SCALE:	NTS
SHEET:	E-600W

REGISTERED PROFESSIONAL ENGINEER
PAUL K. ERICSON
No. 11219
exp. 06/30/2025
ELECTRICAL
STATE OF CALIFORNIA

05-13-2024

OCTA
ORANGE COUNTY TRANSPORTATION AUTHORITY
550 SOUTH MAIN STREET, ORANGE, CA

Autodesk Docs://2014233703_Santa_Ana_Bus/elec_SantaAnaBus_2014233703.rvt

5/8/2024 9:59:45 AM

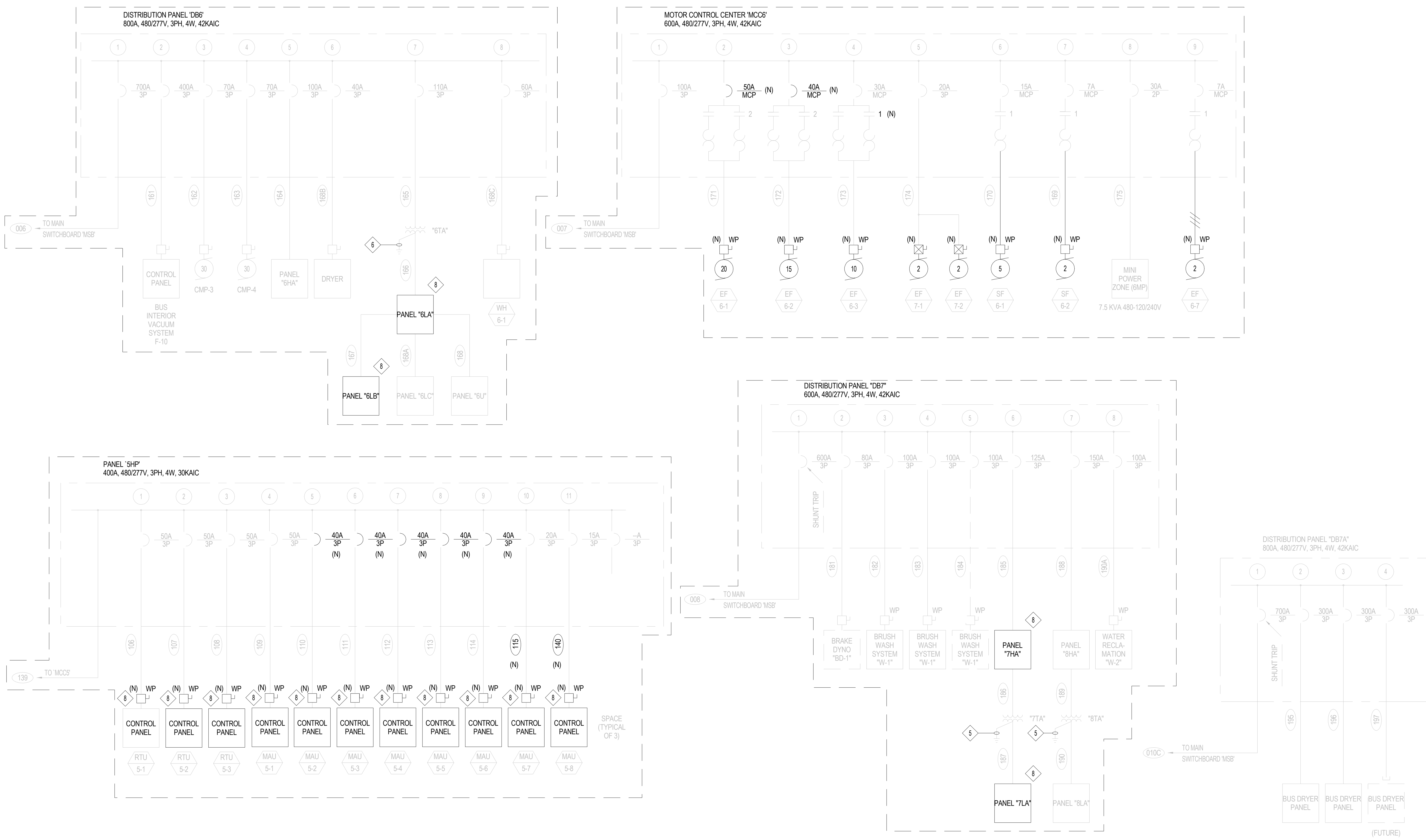

GENERAL NOTES:

1. ALL ELECTRICAL EQUIPMENT IS EXISTING TO REMAIN UNLESS OTHERWISE NOTED.

KEY NOTES:

4. EXISTING 1/2"C-1#8 BC.
5. EXISTING 1/2"C-1#6 BC.
6. EXISTING 1/2"C-1#2 BC.
7. EXISTING 3/4"C-1#1/0 BC.
8. EXISTING ELECTRICAL POWER AND CONTROL PANELS TO BE USED FOR REPLACED MECHANICAL UNITS.

DISTRIBUTION PANEL DB6

LOAD NAME	VOLTS	PH	CONNECTED HP	CONNECTED KVA	AMPS	REMARKS
F-10	480	3		253		
CMP-3	480	3	30	33		
CMP-4	480	3	30	33		
PANEL 6HA	480	3		53		
XFMR 6TA (PANEL 6LA)	480	3		68		
DRYER	480	3		21		
WH 6-1	480	3		36		
TOTAL	480	3		497	598	

MOTOR CONTROL CENTER MCC6

LOAD NAME	VOLTS	PH	CONNECTED HP	CONNECTED KVA	AMPS	REMARKS
EF 6-1	480	3	20	22.4		
EF 6-2	480	3	15	17.5		
EF 6-3	480	3	10	11.6		
EF 7-1, EF 7-2	480	3	2 x 2	5.6		
SF 6-1	480	3	5	6.3		
SF 6-2	480	3	2	2.8		
MINI POWER ZONE (6MP)	480	1		2.3		
EF 6-7	480	3	3	4.0		
TOTAL	480	3		72.5	87.2	

DISTRIBUTION PANEL DB7

LOAD NAME	VOLTS	PH	CONNECTED HP	CONNECTED KVA	AMPS	REMARKS
BD-1	480	3		45		
W-1	480	3		66		
W-1	480	3		66		
W-1	480	3		66		
PANEL 7HA	480	3		67		
PANEL 8HA	480	3		90		
W-2	480	3		36		
TOTAL	480	3		435	523	

DISTRIBUTION PANEL DB7A

LOAD NAME	VOLTS	PH	CONNECTED HP	CONNECTED KVA	AMPS	REMARKS
BUS DRYER PANEL	480	3	(9) 15	157		
BUS DRYER PANEL	480	3	(9) 15	157		
BUS DRYER PANEL	480	3	(9) 15	157		
TOTAL	480	3		471	567	

DISTRIBUTION PANEL DB5B

LOAD NAME	VOLTS	PH	CONNECTED HP	CONNECTED KVA	AMPS	REMARKS
PANEL 5LP	208	3		27		
PANEL 5LQ	208	3		36		
PANEL 5LR	208	3		19		
TOTAL	208	3		82	226	

MOTOR CONTROL CENTER MCC5A

LOAD NAME	VOLTS	PH	CONNECTED HP	CONNECTED KVA	AMPS	REMARKS
EF 5-1	480	3	25	28.3		
EF 5-2	480	3	15	17.5		
EF 5-3	480	3	15	17.5		
EF 5-4	480	3	15	17.5		
EF 5-5	480	3	15	17.5		
EF 5-6	480	3	5	6.3		
EF 5-25	480	3	7 1/2	9.1		
EF 5-28	480	3	20	22.4		
EF 5-37	480	3	7 1/2	9.1		
XFMR 5TM (PANEL 5LT)	480	1		18		
TOTAL	480	3		163.2	196.4	

DISTRIBUTION BOARD DB5A

LOAD NAME	VOLTS	PH	CONNECTED HP	CONNECTED KVA	AMPS	REMARKS
RB-11	480	3		150		
EL-9	480	3		43		
COMP. #1	480	3	50	54		
COMP. #2	480	3	50	54		
XFMR 5TD (PANEL 5LF)	480	3		45		
PANEL 5HE	480	3		73		
PANEL 5HF	480	3		79		
PANEL 5HG	480	3		115		
PANEL 5HH	480	3		45		
PANEL 5HJ	480	3		156		
PANEL 5HK	480	3		89		
PANEL 5HL	480	3		133		
PANEL 5WA	480	3		42		
PANEL 5WB	480	3		28		
TOTAL	480	3		1106	1330	

MOTOR CONTROL CENTER MCC5

LOAD NAME	VOLTS	PH	CONNECTED HP	CONNECTED KVA	AMPS	REMARKS
XFMR 5TL (DB5B)	480	3		82		
PANEL 5HM	480	3		8.4		
PANEL 5HN	480	3		48	238.9	287
PANEL 5HP	480	3		187		
ELEVATOR	480	3	30	33		
SF 5-1	480	3	3	4		
SF 5-2	480	3	3	4		
SF 5-3	480	3	3	4		
SF 5-4	480	3	5	6.3		
SF 5-5	480	3	1 1/2	2.5		
SF 5-6	480	3	1	1.7		
SF 5-7	480	3	1 1/2	2.5		
SF 5-8	480	3	3/4	1.3		
SF 5-9	480	3	2	2.8		
SF 5-10	480	3	1	1.7		
SF 5-14	480	3	1-1/2	2.5		
SF 5-15	480	3	1/2	0.9		
SF 5-16	480	3	1/2	0.9		
EF 5-7	480	3	2	2.8		
EF 5-8	480	3	2	2.8		
EF 5-9	480	3	2	2.8		
EF 5-10	480	3	2	2.8		
EF 5-16	480	3	2	2.8		
EF 5-17	480	3	2	2.8		
EF 5-18	480	3	2	2.8		
EF 5-19	480	3	1 1/2	2.5		
EF 5-20	480	3	1	1.7		
EF 5-21	480	3	1	1.7		
EF 5-22	480	3	1	1.7		
EF 5-24	480	3	3/4	1.3		
EF 5-29	480	3	1/2	0.9		
EF 5-36	480	3	3/4	1.3		
TOTAL	480	3		473.6	570	

PANEL 5HP

LOAD NAME	VOLTS	PH	CONNECTED HP	CONNECTED KVA	AMPS	REMARKS
RTU 5-1	480	3		40.7		
RTU 5-2	480	3		34		
RTU 5-3	480	3		34		
MAU 5-1	480	3	20	23.3		
MAU 5-2	480	3	15	18.4		
MAU 5-3	480	3	15	18.4		
MAU 5-4	480	3	15	18.4		
MAU 5-5	480	3	15	18.4		
MAU 5-6	480	3	15	18.4		
MAU 5-7	480	3	7 1/2	10		
MAU 5-8	480	3	3	4.9		
TOTAL	480	3		238.9	287	

MAIN SWITCHBOARD MSB LOAD SUMMARY / GENERATOR LOAD SUMMARY

LOAD NAME	VOLTS	PH	NORMAL CONNECTED HP	NORMAL CONNECTED KVA	NORMAL CONNECTED AMPS	NORMAL DEMAND	GENERATOR DEMAND
DB4	480	3		242			
DB5	480	3		2142			
DB6	480	3		497			
MCC6	480	3		72.5			
DB7	480	3		435			
LNG SYSTEM	480	3		582			
PANEL 1H	480	3		16			
DB7A	480	3		471			
TOTAL	480	3		4457	5364	(0.7) x 5364 = 3755 AMPS	2216KVA - 435KVA (DB7) - 471KVA (DB7A) = 1310KVA

NOTE:
1. 1500KW GENERATOR = 1666KVA
2. THE GENERATOR ESTIMATED DEMAND LOAD IS 50% OF THE NORMAL CONNECTED LOAD (4433KVA x 0.5 = 2216KVA).
3. BUS WASH/BRAKE DYNO BUILDING WILL DE-ENERGIZED WHEN THE GENERATOR STARTS.

DISTRIBUTION PANEL DB4

LOAD NAME	VOLTS	PH	CONNECTED HP	CONNECTED KVA	AMPS	REMARKS
PANEL 4HA	480	3		52		
PANEL 4HB	480	3		9.4		
RTU 4-1	480	3		34		
RTU 4-2	480	3		15		
RTU 4-3	480	3		24		
RTU 4-4	480	3		21		
XFMR 4TA (PANEL 4LA)	480	3		87		
TOTAL	480	3		242	291	

DISTRIBUTION PANEL DB5

LOAD NAME	VOLTS	PH	CONNECTED HP	CONNECTED KVA	AMPS	REMARKS
MCC5	480	3		421.7		
MCC5A	480	3		163.2		
DB5A	480	3		1106		
PANEL 5H	480	3		23		
PANEL 5HA	480	3		99.4		
PANEL 5HB	480	3		88		
PANEL 5HC	480	3		88		
PANEL 5HD	480	3		83		
XFMR 5TB (PANEL 5LC)	480	3		70		
TOTAL	480	3		2142	2576	

Stantec
801 S. Figueroa Street, Suite 300
Los Angeles, CA 90017

Copyright Reserved
The Contractor shall verify and be responsible for all dimensions. DO NOT scale the drawing - any errors or omissions shall be reported to Stantec without delay.
The Copyrights to all designs and drawings are the property of Stantec. Reproduction or use for any purpose other than that authorized by Stantec is forbidden.

REVISION	DESCRIPTION	DATE
4	100% RESUBMITTAL	05/13/2024
3	100% CONSTRUCTION DRAWING SUBMITTAL	03/27/2024
2	90% UPDATED CONSTRUCTION SUBMITTAL	02/13/2024
1	90% CONSTRUCTION DRAWING SUBMITTAL	12/07/2023

REPLACEMENT OF MECHANICAL UNITS AT SANTA ANA BUS BASE

4301 W. MAC ARTHUR BLVD., SANTA ANA, CA

ELECTRICAL SINGLE LINE DIAGRAM

JOB #:
DESIGN BY: IZ
DRAWN BY: AD
CHECKED BY: PKE
DATE: 02/13/2024
SCALE: NTS
SHEET: E-601W

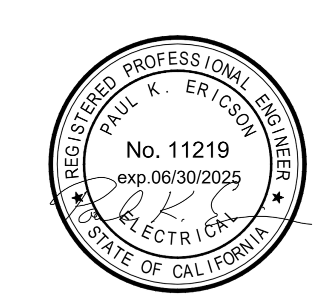

05-13-2024

OCTA
ORANGE COUNTY TRANSPORTATION AUTHORITY
550 SOUTH MAIN STREET, ORANGE, CA

Stantec — Panel

Name:	**4LC**	Volts:	208Y/120V	Mains Type:	MLO	Type:	
Location:		Phases:	3	Mains Rating:	225 A	AIC Rating:	10K
Supply From:	4LA	Wires:	4	Max Rating:	225 A	Mounting:	Surface
Serves:				Lugs:	Single Lugs	Enclosure:	Type 1

Notes:

CKT	Circuit Description	Trip	Poles	CB	A		B		C		CB	Poles	Trip	Circuit Description	CKT	
1	Spare	20 A	1	--	180	**348**					--	**1**	20 A	**EF 4-1**	2	⟨1⟩
3	MTCC-4	20 A	1	--			100	**420**			--	**1**	20 A	**EF 4-2**	4	⟨1⟩
5	PAC-1	20 A	1	--					180	**420**	--	**1**	20 A	**EF 4-3**	6	⟨1⟩
7	LAV/UR CONTROLS	20 A	1	--	1200	**180**					--	**1**	20 A	**EF 4-4**	8	⟨1⟩
9	ANNUNCIATOR-4	20 A	1	--			180	50			--	1	20 A	EF TIME CLOCK	10	
11	MASTER DOOR CTRL PNL	20 A	1	--					500	360	--	1	20 A	ROOF RECEPTACLES	12	
13	MASTER INTERCOM CTRL PNL	20 A	1	--	500	100					--	1	20 A	IRRIGATION CONTROLLER - A	14	
15	SPACE	20 A	1	--			450	100			--	1	20 A	IRRIGATION CONTROLLER - B	16	
17	RECEPTACLES PBX	20 A	1	--					360	1840	--	1	40 A	BUS ENTRANCE GATE	18	
19	RECEPTACLES PBX	20 A	1	--	360	1840					--	1	40 A	BUS ENTRANCE GATE	20	
21	RECEPTACLES OC-12	20 A	1	--			360	1840			--	1	40 A	EMPLOYEE ENTRANCE GATE	22	
23	RECEPTACLES OC-12	20 A	1	--					360	600	--	1	20 A	BUS STOP SHELTER	24	
25	RECEPTACLES OC-12	30 A	1	--	500	3120					--	2	40 A	LOT MONITORING SHACK	26	
27	RECEPTACLE	20 A	1	--			180	3120			--	--	--	--	28	
29	HOOD	20 A	1	--					600	**1737**	--	2	**25 A**	**AC 4-1**	30	⟨1⟩
31	Spare	20 A	1	--	0	**1737**					--	**--**	--	**--**	32	
33	ELECTRIC RANGE	60 A	2	--			4350	**1737**			--	2	**25 A**	**AC 4-2**	34	⟨1⟩
35	--	--	--	--					4350	**1737**	--	**--**	--	**--**	36	
37	IRRIGATION CONTROLLER - C	20 A	1	--	0	**696**					--	1	20 A	**SF 4-1**	38	⟨1⟩
39	Space	--	1	--			--	100			--	1	20 A	DAMPERS	40	
41	Space	--	1	--					--	--	--	1	--	Space	42	
				Total Load:	**10.76 kVA**		**12.99 kVA**		**13.04 kVA**							
				Total Amps:	**90 A**		**111 A**		**112 A**							

Load Classification	Connected Load	Demand Factor	Estimated Demand	Panel Totals	
Spare	36792 VA	100.00%	36792 VA		
				Total Conn. Load:	**36792 VA**
				Total Est. Demand:	**36792 VA**
				Total Conn.:	**102 A**
				Total Est. Demand:	**102 A**
				Existing Total Conn. Load:	**34710 VA**
				Existing Total Conn:	**96 A**

CB Legend (blank = circuit breaker):
G = GFCI S = Shunt Trip D = Switching Duty A = AFCI H = HID Rated C = HACR Rated † = Existing Circuit ‡ = Revised Circuit

Notes:

Stantec — Panel

Name:	**5HA**	Volts:	480Y/277V	Mains Type:	MLO	Type:	
Location:	ELECTRICAL RM 184	Phases:	3	Mains Rating:	225 A	AIC Rating:	22K
Supply From:	DB5	Wires:	4	Max Rating:	225 A	Mounting:	Surface
Serves:				Lugs:	Single Lugs	Enclosure:	Type 1

Notes:

CKT	Circuit Description	Trip	Poles	CB	A		B		C		CB	Poles	Trip	Circuit Description	CKT	
1	SITE LIGHTING	20 A	1	--	2880	1600					--	1	20 A	WALL LIGHTING	2	
3	SITE LIGHTING	20 A	1	--			2880	1200			--	1	20 A	WALL LIGHTING	4	
5	SITE LIGHTING	20 A	1	--					2880	1200	--	1	20 A	WALL LIGHTING	6	
7	STEAM CLEAN LTG	20 A	1	--	2228	7167					--	3	60 A	SC-1 PARALLELOGRAM LIFT	8	
9	STEAM CLEAN LTG	20 A	1	--			2228	7167			--	--	--	--	10	
11	BAY LTG	20 A	1	--					1988	7167	--	--	--	--	12	
13	BAY LTG	20 A	1	--	1966	336					--	1	20 A	CANOPY LTG	14	
15	BAY LTG	20 A	1	--			2156	420			--	1	20 A	CANOPY LTG	16	
17	BAY LTG	20 A	1	--					2156	588	--	1	20 A	CANOPY LTG	18	
19	BAY LTG	20 A	1	--	1398	504					--	1	20 A	CANOPY LTG	20	
21	BAY LTG	20 A	1	--			1398	5600			--	3	30 A	SC-3 HOT PRESS. WASHER	22	
23	STEAM CLEAN LTG	20 A	1	--					1632	5600	--	--	--	--	24	
25	STEAM CLEAN LTG	20 A	1	--	1632	5600					--	--	--	--	26	
27	Space	--	1	--			--	**1496**			--	**3**	20 A	**SF 5-12, 5-13 & EF 5-34**	28	⟨1⟩
29	Space	--	1	--					--	**1496**	--	**--**	**--**	**--**	30	
31	Space	--	1	--	--	**1496**					--	**--**	**--**	**--**	32	
33	Space	--	1	--			--	--			--	1	--	Space	34	
35	Space	--	1	--					--	--	--	1	--	Space	36	
37	Space	--	1	--	--	8335					--	3	70 A	PANEL 5LA (VIA XFMR 5TA)	38	
39	Space	--	1	--			--	8530			--	--	--	--	40	
41	Space	--	1	--					--	6485	--	--	--	--	42	
				Total Load:	**35.14 kVA**		**33.08 kVA**		**31.19 kVA**							
				Total Amps:	**128 A**		**120 A**		**113 A**							

Load Classification	Connected Load	Demand Factor	Estimated Demand	Panel Totals	
Spare	99409 VA	100.00%	99409 VA		
				Total Conn. Load:	**99409 VA**
				Total Est. Demand:	**99409 VA**
				Total Conn.:	**120 A**
				Total Est. Demand:	**120 A**
				Existing Total Conn. Load:	**98911 VA**
				Existing Total Conn:	**119 A**

CB Legend (blank = circuit breaker):
G = GFCI S = Shunt Trip D = Switching Duty A = AFCI H = HID Rated C = HACR Rated † = Existing Circuit ‡ = Revised Circuit

Notes:

Stantec — Panel

Name:	**5HE**	Volts:	480Y/277V	Mains Type:	MLO	Type:	
Location:	ELECTRICAL RM 137	Phases:	3	Mains Rating:	225 A	AIC Rating:	30K
Supply From:	DB5A	Wires:	4	Max Rating:	225 A	Mounting:	Surface
Serves:				Lugs:	Single Lugs	Enclosure:	Type 1

Notes:

CKT	Circuit Description	Trip	Poles	CB	A		B		C		CB	Poles	Trip	Circuit Description	CKT	
1	SITE LTG	20 A	1	--	960	1200					--	1	20 A	WALL LTG	2	
3	SITE LTG	20 A	1	--			960	1600			--	1	20 A	WALL LTG	4	
5	SITE LTG	20 A	1	--					960	1284	--	1	20 A	WALL LTG	6	
7	PARTS ROOM LTG	20 A	1	--	2062	480					--	3	20 A	PS-1 STAK SYSTEM	8	
9	PARTS ROOM LTG	20 A	1	--			2002	480			--	--	--	--	10	
11	PARTS ROOM LTG	20 A	1	--					2760	480	--	--	--	--	12	
13	PARTS ROOM LTG	20 A	1	--	2760	4633					--	3	30 A	PS-10 FORKLIFT	14	
15	PARTS ROOM LTG	20 A	1	--			2645	4633			--	--	--	--	16	
17	PARTS ROOM LTG	20 A	1	--					2760	4633	--	--	--	--	18	
19	PARTS ROOM LTG	20 A	1	--	2243	**1884**					--	3	20 A	**EF 5-31, 5-33, & SF 5-11**	20	⟨1⟩
21	PARTS ROOM LTG	20 A	1	--			2090	**1884**			--	--	--	--	22	
23	PARTS ROOM LTG	20 A	1	--					2645	**1884**	--	--	--	--	24	
25	PARTS ROOM LTG	20 A	1	--	2530	0					--	1	20 A	Spare	26	
27	PARTS ROOM LTG	20 A	1	--			2415	0			--	1	20 A	Spare	28	
29	PARTS ROOM LTG	20 A	1	--					2530	0	--	1	20 A	Spare	30	
31	TEL, ELECT, LUBE, C.A. LTG	20 A	1	--	539	0					--	1	20 A	Spare	32	
33	TEL, ELECT, LUBE, C.A. LTG	20 A	1	--			385	0			--	1	20 A	Spare	34	
35	Spare	20 A	1	--					0	0	--	1	20 A	Spare	36	
37	Spare	20 A	1	--	0	6330					--	3	50 A	PANEL 5LH (VIA XFMR 5TE)	38	
39	Spare	20 A	1	--			0	3680			--	--	--	--	40	
41	Spare	20 A	1	--					0	4155	--	--	--	--	42	
				Total Load:	**25.62 kVA**		**22.77 kVA**		**24.09 kVA**							
				Total Amps:	**93 A**		**82 A**		**88 A**							

Load Classification	Connected Load	Demand Factor	Estimated Demand	Panel Totals	
Spare	72486 VA	100.00%	72486 VA		
				Total Conn. Load:	**72486 VA**
				Total Est. Demand:	**72486 VA**
				Total Conn.:	**87 A**
				Total Est. Demand:	**87 A**
				Existing Total Conn. Load:	**73134 VA**
				Existing Total Conn:	**88 A**

CB Legend (blank = circuit breaker):
G = GFCI S = Shunt Trip D = Switching Duty A = AFCI H = HID Rated C = HACR Rated † = Existing Circuit ‡ = Revised Circuit

Notes:

Stantec — Panel

Name:	**5HJ**	Volts:	480Y/277V	Mains Type:	MLO	Type:	
Location:	BODY 174	Phases:	3	Mains Rating:	400 A	AIC Rating:	22K
Supply From:	DB5A	Wires:	4	Max Rating:	400 A	Mounting:	Surface
Serves:				Lugs:	Single Lugs	Enclosure:	Type 1

Notes:

CKT	Circuit Description	Trip	Poles	CB	A		B		C		CB	Poles	Trip	Circuit Description	CKT
1	BP-1 IN-GROUND LIFT	30 A	3	--	3733	5600					--	3	50 A	V-1 COLLECTION VACUUM	2
3	--	--	--	--			3733	5600			--	--	--	--	4
5	--	--	--	--					3733	5600	--	--	--	--	6
7	BP-2 IN-GROUND LIFT	30 A	3	--	3733	504					--	1	20 A	CANOPY LTG	8
9	--	--	--	--			3733	420			--	1	20 A	CANOPY LTG	10
11	--	--	--	--					3733	0	--	1	20 A	SMOKER CANOPY LTG	12
13	BP-1 IN-GROUND LIFT	30 A	3	--	3733	0					--	1	20 A	Spare	14
15	--	--	--	--			3733	2134			--	1	20 A	BODY LTG	16
17	--	--	--	--					3733	2146	--	1	20 A	BODY LTG	18
19	BP-7 PAINT BOOTH	100 A	3	--	17800	0					--	1	20 A	LCP5D CONTROL	20
21	--	--	--	--			17800	1476			--	1	20 A	BODY LTG	22
23	--	--	--	--					17800	1834	--	1	20 A	BODY LTG	24
25	SM-1 SHEAR	20 A	3	--	2933	948					--	1	20 A	PAINT BOTH LTG	26
27	--	--	--	--			2933	711			--	1	20 A	VAC, STOR, PAINT MIX LTG	28
29	--	--	--	--					2933	1600	--	1	20 A	WALL LTG	30
31	SM-6 VERTICAL BAND SAW	20 A	3	--	1267	1600					--	1	20 A	WALL LTG	32
33	--	--	--	--			1267	1200			--	1	20 A	WALL LTG	34
35	--	--	--	--					1267	0	--	1	20 A	Spare	36
37	SM-20 OVERHEAD CRANE	20 A	3	--	1493	7540					--	3	70 A	PANEL 5LL (VIA XFMR 5TH)	38
39	--	--	--	--			1493	6280			--	--	--	--	40
41	--	--	--	--					1493	5990	--	--	--	--	42
				Total Load:	**50.88 kVA**		**52.51 kVA**		**51.86 kVA**						
				Total Amps:	**184 A**		**190 A**		**188 A**						

Load Classification	Connected Load	Demand Factor	Estimated Demand	Panel Totals	
Spare	155259 VA	100.00%	155259 VA		
				Total Conn. Load:	**155259 VA**
				Total Est. Demand:	**155259 VA**
				Total Conn.:	**187 A**
				Total Est. Demand:	**187 A**

CB Legend (blank = circuit breaker):
G = GFCI S = Shunt Trip D = Switching Duty A = AFCI H = HID Rated C = HACR Rated † = Existing Circuit ‡ = Revised Circuit

Notes:

⟨#⟩ KEY NOTES:

1 EXISTING EQUIPMENT TO BE REPLACED.

4LC	5HA
5HE	5HJ

PROFESSIONAL ENGINEER stamp: REGISTERED PROFESSIONAL ENGINEER, PAUL K. ERICSON, No. 11219, exp.06/30/2025, ELECTRICAL, STATE OF CALIFORNIA

05-13-2024

Stantec
801 S. Figueroa Street, Suite 300
Los Angeles, CA 90017

Copyright Reserved
The Contractor shall verify and be responsible for all dimensions. DO NOT scale the drawing - any errors or omissions shall be reported to Stantec without delay.
The Copyrights to all designs and drawings are the property of Stantec. Reproduction or use for any purpose other than that authorized by Stantec is forbidden.

REVISION	DESCRIPTION	DATE
4	100% RESUBMITTAL	05/13/2024
3	100% CONSTRUCTION DRAWING SUBMITTAL	03/27/2024
2	90% UPDATED CONSTRUCTION SUBMITTAL	02/13/2024
1	90% CONSTRUCTION DRAWING SUBMITTAL	12/07/2023

REPLACEMENT OF MECHANICAL UNITS AT SANTA ANA BUS BASE
4301 W. MAC ARTHUR BLVD., SANTA ANA, CA

PANEL SCHEDULES

JOB #:	
DESIGN BY:	IZ
DRAWN BY:	AD
CHECKED BY:	PKE
DATE:	02/13/2024
SCALE:	NTS
SHEET:	**E-700W**

OCTA
ORANGE COUNTY
TRANSPORTATION AUTHORITY
550 SOUTH MAIN STREET, ORANGE, CA

IFB 4-2550 EXHIBIT B

Panel 5LD

Stantec — Panel

Name: **5LD** | Volts: 208Y/120V | Mains Type: MLO | Type:
Location: RUNNING REPAIR AREA 178 | Phases: 3 | Mains Rating: 225 A | AIC Rating: 10K
Supply From: 5LC | Wires: 4 | Max Rating: 225 A | Mounting: Surface
Serves: | Lugs: Single Lugs | Enclosure: Type 1

Notes:

CKT	Circuit Description	Trip	Poles	CB	A	A	B	B	C	C	CB	Poles	Trip	Circuit Description	CKT
1	Spare	20 A	1	--	0	50					--	1	20 A	SOLENOID	2
3	Spare	20 A	1	--			0	50			--	1	20 A	SOLENOID	4
5	RECEPTACLES DROP	20 A	1	--					360	**276**	**--**	1	20 A	**EF 5-39**	6
7	B-4 BATTERY CHARGER	20 A	1	--	500	0					--	1	20 A	Spare	8
9	RECEPTACLES DROP	20 A	1	--			360	360			--	1	20 A	RECEPTACLES DROP	10
11	RECEPTACLES DROP	20 A	1	--					360	360	--	1	20 A	RECEPTACLES DROP	12
13	RECEPTACLES DROP	20 A	1	--	360	360					--	1	20 A	RECEPTACLES DROP	14
15	RECEPTACLES DROP	20 A	1	--			360	360			--	1	20 A	RECEPTACLES DROP	16
17	PR-27 FLUID MANAGEMENT	20 A	1	--					500	1375	--	2	20 A	PR-14 FILTER CRUSHER	18
19	PR-25 PARTS WASHER	20 A	1	--	670	1375					--	--	--	--	20
21	PR-27 FLUID MANAGEMENT	20 A	1	--			500	530			--	1	20 A	DRINKING FOUNTAIN DF 5-2	22
23	PR-25 PARTS WASHER	20 A	1	--					670	180	--	1	20 A	ROOF RECEPTACLES	24
25	RECEPTACLE B-4	20 A	1	--	180	1590					--	1	20 A	OVERHEAD SECT. DOOR	26
27	PR-27 FLUID MANAGEMENT	20 A	1	--			500	1590			--	1	20 A	OVERHEAD SECT. DOOR	28
29	RECEPTACLES	20 A	1	--					360	1590	--	1	20 A	OVERHEAD SECT. DOOR	30
31	RECEPTACLES	20 A	1	--	360	1590					--	1	20 A	OVERHEAD SECT. DOOR	32
33	WASTE OIL ALARM	20 A	1	--			0	1590			--	1	20 A	OVERHEAD SECT. DOOR	34
35	Spare	20 A	1	--					0	1590	--	1	20 A	OVERHEAD SECT. DOOR	36
37	Spare	20 A	1	--	0	1590					--	1	20 A	OVERHEAD SECT. DOOR	38
39	Spare	20 A	1	--			0	0			--	1	20 A	Spare	40
41	Spare	20 A	1	--					0	0	--	1	20 A	Spare	42
				Total Load:	**8.63 kVA**		**6.20 kVA**		**7.62 kVA**						
				Total Amps:	**74 A**		**52 A**		**65 A**						

Load Classification	Connected Load	Demand Factor	Estimated Demand	Panel Totals	
Spare	22446 VA	100.00%	22446 VA		
				Total Conn. Load:	**22446 VA**
				Total Est. Demand:	**22446 VA**
				Total Conn.:	**62 A**
				Total Est. Demand:	**62 A**
				Existing Total Conn. Load:	**22670 VA**
				Existing Total Conn:	**63 A**

CB Legend (blank = circuit breaker):
G = GFCI S = Shunt Trip D = Switching Duty A = AFCI H = HID Rated C = HACR Rated † = Existing Circuit ‡ = Revised Circuit

Notes:

Panel 5LG

Stantec — Panel

Name: **5LG** | Volts: 208Y/120V | Mains Type: MLO | Type:
Location: REBUILD 106 | Phases: 3 | Mains Rating: 225 A | AIC Rating: 10K
Supply From: 5LF | Wires: 4 | Max Rating: 225 A | Mounting: Surface
Serves: | Lugs: Single Lugs | Enclosure: Type 1

Notes:

CKT	Circuit Description	Trip	Poles	CB	A	A	B	B	C	C	CB	Poles	Trip	Circuit Description	CKT
1	RECEPTACLES	20 A	1	--	180	670					--	1	20 A	RB-25 JIB CRANE	2
3	RECEPTACLES	20 A	1	--			180	670			--	1	20 A	RB-25 JIB CRANE	4
5	RECEPTACLES	20 A	1	--					180	670	--	1	20 A	RB-25 JIB CRANE	6
7	RECEPTACLES	20 A	1	--	540	670					--	1	20 A	RB-25 JIB CRANE	8
9	RECEPTACLES	20 A	1	--			540	1000			--	1	20 A	EL-2 BUFFER/GRINDER	10
11	RECEPTACLES	20 A	1	--					360	180	--	1	20 A	EL-12 WORKBENCH	12
13	RB-1 WORKBENCH	20 A	1	--	360	360					--	1	20 A	RECEPTACLES	14
15	RB-1 WORKBENCH	20 A	1	--			180	360			--	1	20 A	RECEPTACLES	16
17	RB-1 WORKBENCH	20 A	1	--					180	180	--	1	20 A	RECEPTACLES	18
19	RB-1 WORKBENCH	20 A	1	--	180	180					--	1	20 A	EL-1 WORKBENCH W/VISE	20
21	RB-1 WORKBENCH	20 A	1	--			180	**2143**			**--**	2	**30 A**	**HP 5-1**	22
23	REC. OFFICE	20 A	1	--					180	**2143**	**--**	**--**	**--**	**--**	24
25	REC. OFFICE	20 A	1	--	180	510					--	1	20 A	UH 5-5	26
27	RB-8 BUFFER/GRINDER	20 A	1	--			1000	510			--	1	20 A	UH 5-9	28
29	RB-21 DRILL PRESS	20 A	1	--					1590	0	--	1	20 A	Spare	30
31	RB-3 TRANSM. DRAIN TABLE	20 A	1	--	540	0					--	1	20 A	Spare	32
33	RB-3 TRANSM. DRAIN TABLE	20 A	1	--			540	0			--	1	20 A	Spare	34
35	RB-3 TRANSM. DRAIN TABLE	20 A	1	--					360	0	--	1	20 A	Spare	36
37	RB-7 PARTS WASHER	20 A	1	--	180	0					--	1	20 A	Spare	38
39	Spare	20 A	1	--			0	0			--	1	20 A	Spare	40
41	Spare	20 A	1	--					0	0	--	1	20 A	Spare	42
				Total Load:	**4.55 kVA**		**7.30 kVA**		**6.02 kVA**						
				Total Amps:	**38 A**		**63 A**		**52 A**						

Load Classification	Connected Load	Demand Factor	Estimated Demand	Panel Totals	
Spare	17876 VA	100.00%	17876 VA		
				Total Conn. Load:	**17876 VA**
				Total Est. Demand:	**17876 VA**
				Total Conn.:	**50 A**
				Total Est. Demand:	**50 A**
				Existing Total Conn. Load:	**16630 VA**
				Existing Total Conn:	**46 A**

CB Legend (blank = circuit breaker):
G = GFCI S = Shunt Trip D = Switching Duty A = AFCI H = HID Rated C = HACR Rated † = Existing Circuit ‡ = Revised Circuit

Notes:

KEY NOTES:

1 EXISTING EQUIPMENT TO BE REPLACED.

Panel 5LH

Stantec — Panel

Name: **5LH** | Volts: 208Y/120V | Mains Type: MCB | Type:
Location: ELECTRICAL RM 137 | Phases: 3 | Mains Rating: 225 A | AIC Rating: 10K
Supply From: 5HE | Wires: 4 | MCB Rating: 100 A | Mounting: Surface
Serves: | Lugs: Single Lugs | Enclosure: Type 1

Notes:

CKT	Circuit Description	Trip	Poles	CB	A	A	B	B	C	C	CB	Poles	Trip	Circuit Description	CKT
1	RECEPTACLES	20 A	1	--	540	1040					--	2	20 A	AIR DRYER	2
3	RECEPTACLES	20 A	1	--			540	1040			--	--	--	--	4
5	RECEPTACLES	20 A	1	--					540	1040	--	2	20 A	AIR DRYER	6
7	RECEPTACLES	20 A	1	--	360	1040					--	--	--	--	8
9	RECEPTACLES	20 A	1	--			180	300			--	1	20 A	PANEL LCP5A	10
11	RECEPTACLES	20 A	1	--					180	385	--	1	20 A	UH 5-1	12
13	RECEPTACLES	20 A	1	--	720	1590					--	1	20 A	OVERHEAD SECT. DOOR	14
15	RECEPTACLES	20 A	1	--			720	100			--	1	20 A	AUT. DRAIN VALVES	16
17	RECEPTACLES	20 A	1	--					540	800	--	1	20 A	FIRE BELL	18
19	F.A.C.P	20 A	1	--	0	800					--	1	20 A	F/A PNL	20
21	Spare	20 A	1	--			0	800			--	1	20 A	MTC	22
23	L.N.G. PANEL	20 A	1	--					0	670	--	1	20 A	EF 5-30 (1/4)	24
25	L.N.G. U.P.S	20 A	1	--	0	**180**					**--**	1	20 A	**EF 5-32 (1/10)**	26
27	Space	--	1	--			--	0			--	1	20 A	Spare	28
29	Space	--	1	--					--	0	--	1	20 A	Spare	30
31	Space	--	1	--	--	--					--	1	--	Space	32
33	Space	--	1	--			--	--			--	1	--	Space	34
35	Space	--	1	--					--	--	--	1	--	Space	36
37	Space	--	1	--	--	--					--	1	--	Space	38
39	Space	--	1	--			--	--			--	1	--	Space	40
41	Space	--	1	--					--	--	--	1	--	Space	42
				Total Load:	**6.27 kVA**		**3.68 kVA**		**4.16 kVA**						
				Total Amps:	**53 A**		**31 A**		**35 A**						

Load Classification	Connected Load	Demand Factor	Estimated Demand	Panel Totals	
Spare	14105 VA	100.00%	14105 VA		
				Total Conn. Load:	**14105 VA**
				Total Est. Demand:	**14105 VA**
				Total Conn.:	**39 A**
				Total Est. Demand:	**39 A**
				Existing Total Conn. Load:	**14165 VA**
				Existing Total Conn:	**39 A**

CB Legend (blank = circuit breaker):
G = GFCI S = Shunt Trip D = Switching Duty A = AFCI H = HID Rated C = HACR Rated † = Existing Circuit ‡ = Revised Circuit

Notes:

Panel 5LJ

Stantec — Panel

Name: **5LJ** | Volts: 208Y/120V | Mains Type: MCB | Type:
Location: BUILDING MAINTENANCE 150 | Phases: 3 | Mains Rating: 225 A | AIC Rating: 10K
Supply From: 5HG | Wires: 4 | MCB Rating: 150 A | Mounting: Surface
Serves: | Lugs: Single Lugs | Enclosure: Type 1

Notes:

CKT	Circuit Description	Trip	Poles	CB	A	A	B	B	C	C	CB	Poles	Trip	Circuit Description	CKT
1	BM-1 WORKBENCH W/VISE	20 A	1	--	180	180					--	1	20 A	M-1 WORKBENCH W/VISE	2
3	BM-1 WORKBENCH W/VISE	20 A	1	--			180	180			--	1	20 A	M-1 WORKBENCH W/VISE	4
5	BM-1 WORKBENCH W/VISE	20 A	1	--					180	1000	--	1	20 A	M-6 BUFFER/GRINDER	6
7	BM-1 WORKBENCH W/VISE	20 A	1	--	180	1150					--	2	20 A	M-7 HORIZONTAL BAND SAW	8
9	BM-2 DRILL PRESS	20 A	1	--			1600	1150			--	--	--	--	10
11	BM-3 VERTICAL BAND SAW	20 A	1	--					180	1130	--	1	20 A	M-8 VERTICAL BAND SAW	12
13	BM-6 DUST COLLECTOR	40 A	1	--	1840	180					--	1	20 A	PLASMA CUTTER M-13	14
15	BM-5 BUFFER GRINDER	20 A	1	--			1000	1000			--	1	40 A	M-9 BELT DISC SANDER	16
17	BM-6 BELT/DISC SANDER	40 A	1	--					4140	720	--	1	20 A	RECEPTACLES	18
19	BM-18 COMP. MITRE SAW	40 A	1	--	1840	1080					--	1	20 A	RECEPTACLES	20
21	BM-19 PIPE THREADING	20 A	1	--			1130	1080			--	1	20 A	RECEPTACLES	22
23	REC. OFFICE #149	20 A	1	--					180	900	--	1	20 A	RECEPTACLES	24
25	RECEPTACLES	20 A	1	--	360	1590					--	1	20 A	OVERHEAD SECT. DOOR	26
27	RECEPTACLES	20 A	1	--			360	1590			--	1	20 A	OVERHEAD SECT. DOOR	28
29	RECEPTACLES	20 A	1	--					360	510	--	1	20 A	UH 5-10	30
31	RECEPTACLES	20 A	1	--	360	1840					--	1	40 A	M-25 FUME EXTRACTOR	32
33	RECEPTACLES	20 A	1	--			360	**1737**			**--**	2	**25 A**	**AC 5-1**	34
35	RECEPTACLES	20 A	1	--					180	**1737**	**--**	**--**	**--**	**--**	36
37	RECEPTACLES	20 A	1	--	540	900					--	3	20 A	M-5 DRILL PRESS	38
39	RECEPTACLES	20 A	1	--			360	900			--	--	--	--	40
41	RECEPTACLES	20 A	1	--					360	900	--	--	--	--	42
				Total Load:	**12.22 kVA**		**12.63 kVA**		**12.48 kVA**						
				Total Amps:	**102 A**		**106 A**		**104 A**						

Load Classification	Connected Load	Demand Factor	Estimated Demand	Panel Totals	
Spare	37324 VA	100.00%	37324 VA		
				Total Conn. Load:	**37324 VA**
				Total Est. Demand:	**37324 VA**
				Total Conn.:	**104 A**
				Total Est. Demand:	**104 A**
				Existing Total Conn. Load:	**36970 VA**
				Existing Total Conn:	**103 A**

CB Legend (blank = circuit breaker):
G = GFCI S = Shunt Trip D = Switching Duty A = AFCI H = HID Rated C = HACR Rated † = Existing Circuit ‡ = Revised Circuit

Notes:

5LD	5LG
5LH	5LG

REGISTERED PROFESSIONAL ENGINEER PAUL K. ERICSON No. 11219 exp.06/30/2025 ELECTRICAL STATE OF CALIFORNIA

05-13-2024

Stantec
801 S. Figueroa Street, Suite 300
Los Angeles, CA 90017

Copyright Reserved
The Contractor shall verify and be responsible for all dimensions. DO NOT scale the drawing - any errors or omissions shall be reported to Stantec without delay.
The Copyrights to all designs and drawings are the property of Stantec. Reproduction or use for any purpose other than that authorized by Stantec is forbidden.

REVISION	DESCRIPTION	DATE
4	100% RESUBMITTAL	05/13/2024
3	100% CONSTRUCTION DRAWING SUBMITTAL	03/27/2024
2	90% UPDATED CONSTRUCTION SUBMITTAL	02/13/2024
1	90% CONSTRUCTION DRAWING SUBMITTAL	12/07/2023

REPLACEMENT OF MECHANICAL UNITS AT SANTA ANA BUS BASE

4301 W. MAC ARTHUR BLVD., SANTA ANA, CA

PANEL SCHEDULES

JOB #:
DESIGN BY: IZ
DRAWN BY: AD
CHECKED BY: PKE
DATE: 02/13/2024
SCALE: NTS
SHEET: **E-701W**

OCTA
ORANGE COUNTY TRANSPORTATION AUTHORITY
550 SOUTH MAIN STREET, ORANGE, CA

Autodesk Docs://2014233703_Santa_Ana_Bus/elec_SantaAnaBus_2014233703.rvt
5/8/2024 9:59:48 AM

IFB 4-2550 EXHIBIT B

Stantec Panel

Name: **5LK** | Volts: 208Y/120V | Mains Type: MCB | Type:
Location: STORAGE 155 | Phases: 3 | Mains Rating: 225 A | AIC Rating: 10K
Supply From: 5HH (VIA XFMR 5TG) | Wires: 4 | MCB Rating: 150 A | Mounting: Surface
Serves: | Lugs: Single Lugs | Enclosure: Type 1

Notes:

	CKT	Circuit Description	Trip	Poles	CB	A		B		C		CB	Poles	Trip	Circuit Description	CKT
	1	CAMERAS 6, 7, 8 & 9	20 A	1	--	600	180					--	1	20 A	REC. MANAGER OFFICE	2
1	3	**EF 5-40**	20 A	**1**	**--**			**420**	180			--	1	20 A	REC. OFFICE	4
	5	RECEPTACLES	20 A	1	--					0	360	--	1	20 A	RECEPTACLES COUNTER	6
	7	RECEPTACLES	20 A	1	--	540	1000					--	1	20 A	REFRIGERATOR	8
	9	RECEPTACLES	20 A	1	--			540	1200			--	1	20 A	MICROWAVE	10
	11	RECEPTACLES	20 A	1	--					540	1200	--	1	20 A	MICROWAVE	12
	13	RECEPTACLES	20 A	1	--	720	1590					--	1	20 A	GARBAGE DISPOSAL	14
	15	RECEPTACLES	20 A	1	--			720	1300			--	1	20 A	HOT WATER DISPENSER	16
	17	RECEPTACLES	20 A	1	--					720	900	--	1	20 A	RECEPTACLES RESTROOMS	18
	19	RECEPTACLES	20 A	1	--	720	540					--	1	20 A	RECEPTACLES	20
	21	RECEPTACLES	20 A	1	--			720	360			--	1	20 A	RECEPTACLES	22
	23	RECEPTACLES	20 A	1	--					720	360	--	1	20 A	RECEPTACLES	24
	25	SHREDDER	25 A	3	--	1267	540					--	1	20 A	RECEPTACLES	26
	27	--	--	--	--			1267	540			--	1	20 A	RECEPTACLES	28
	29	--	--	--	--					1267	540	--	1	20 A	RECEPTACLES	30
	31	MASTER DOOR CTRL PNL	20 A	1	--	500	1130					--	1	20 A	COILING DOOR	32
	33	MASTER INTERCOM CTRL PNL	20 A	1	--			500	1130			--	1	20 A	COILING DOOR	34
	35	Spare	20 A	1	--					0	1200	--	1	20 A	DOCK LEVELER	36
	37	PANEL 5UC	30 A	2	--	720	1860					--	3	40 A	PANEL 5LS	38
	39	--	--	--	--			1080	1530			--	--	--	--	40
	41	Spare	20 A	1	--					0	1920	--	--	--	--	42
					Total Load:	**11.91 kVA**		**11.49 kVA**		**9.73 kVA**						
					Total Amps:	**101 A**		**98 A**		**81 A**						

Load Classification	Connected Load	Demand Factor	Estimated Demand	Panel Totals	
Spare	33121 VA	100.00%	33121 VA		
				Total Conn. Load:	**33121 VA**
				Total Est. Demand:	**33121 VA**
				Total Conn.:	**92 A**
				Total Est. Demand:	**92 A**
				Existing Total Conn. Load:	**33651 VA**
				Existing Total Conn:	**93 A**

CB Legend (blank = circuit breaker):
G = GFCI S = Shunt Trip D = Switching Duty A = AFCI H = HID Rated C = HACR Rated † = Existing Circuit ‡ = Revised Circuit

Notes:

Stantec Panel

Name: **5LM** | Volts: 208Y/120V | Mains Type: MCB | Type:
Location: COMPONENT EXCHANGE 148 | Phases: 3 | Mains Rating: 225 A | AIC Rating: 10K
Supply From: 5HK (VIA TFMR 5TJ) | Wires: 4 | MCB Rating: 150 A | Mounting: Surface
Serves: | Lugs: Single Lugs | Enclosure: Type 1

Notes:

	CKT	Circuit Description	Trip	Poles	CB	A		B		C		CB	Poles	Trip	Circuit Description	CKT
	1	SR-1 BUFFER GRINDER	20 A	1	--	1000	0					--	1	20 A	Spare	2
	3	SR-2 SMALL PARTS CLEANER	20 A	1	--			1130	670			--	1	20 A	SR-9 JIB CRANE	4
	5	SR-7 WORKBENCH W/VISE	20 A	1	--					180	180	--	1	20 A	CE-11 WORKBENCH W/VISE	6
	7	SR-7 WORKBENCH W/VISE	20 A	1	--	180	180					--	1	20 A	CE-11 WORKBENCH W/VISE	8
	9	SR-7 WORKBENCH W/VISE	20 A	1	--			180	180			--	1	20 A	CE-14 FLUID MANAGEMENT	10
	11	SR-8 PARTS WASHER	20 A	1	--					670	0	--	1	20 A	Spare	12
	13	RECEPTACLES	20 A	1	--	540	360					--	1	20 A	RECEPTACLES	14
	15	RECEPTACLES	20 A	1	--			540	360			--	1	20 A	RECEPTACLES	16
	17	RECEPTACLES	20 A	1	--					360	360	--	1	20 A	RECEPTACLES	18
	19	RECEPTACLES	20 A	1	--	540	360					--	1	20 A	RECEPTACLES	20
	21	RECEPTACLES	20 A	1	--			540	360			--	1	20 A	RECEPTACLES	22
	23	RECEPTACLES	20 A	1	--					360	180	--	1	20 A	RECEPTACLES	24
	25	REC. NETWORK RACK	20 A	1	--	360	1200					--	1	20 A	UP-5 SEWING MACHINE STA.	26
	27	REC. NETWORK RACK	20 A	1	--			360	540			--	1	20 A	RECEPTACLES	28
	29	REC. NETWORK RACK	20 A	1	--					360	360	--	1	20 A	RECEPTACLES	30
1	31	**RTU 5-4**	40 A	2	**--**	**2965**	1590					--	1	20 A	OVERHEAD SECT. DOOR	32
	33	--	**--**	**--**	**--**			**2965**	0			--	1	20 A	Spare	34
1	35	**RTU 5-5**	40 A	2	**--**					**2965**	670	--	1	20 A	COILING DOOR	36
	37	--	**--**	**--**	**--**	**2965**	1130					--	1	20 A	COILING DOOR	38
	39	EF 5-23 (1/4)	20 A	1	--			670	300			--	1	20 A	FA REMOTE PWR SUPPLY	40
	41	ROOF RECEPTACLES	20 A	1	--					720	510	--	1	20 A	Spare	42
					Total Load:	**13.37 kVA**		**8.80 kVA**		**7.88 kVA**						
					Total Amps:	**113 A**		**74 A**		**66 A**						

Load Classification	Connected Load	Demand Factor	Estimated Demand	Panel Totals	
Spare	30040 VA	100.00%	30040 VA		
				Total Conn. Load:	**30040 VA**
				Total Est. Demand:	**30040 VA**
				Total Conn.:	**83 A**
				Total Est. Demand:	**83 A**
				Existing Total Conn. Load:	**25680 VA**
				Existing Total Conn:	**71 A**

CB Legend (blank = circuit breaker):
G = GFCI S = Shunt Trip D = Switching Duty A = AFCI H = HID Rated C = HACR Rated † = Existing Circuit ‡ = Revised Circuit

Notes:

KEY NOTES:

1 EXISTING EQUIPMENT TO BE REPLACED.

Stantec Panel

Name: **5LN** | Volts: 208Y/120V | Mains Type: MCB | Type:
Location: CLEAN SHOP 141 | Phases: 3 | Mains Rating: 225 A | AIC Rating: 10K
Supply From: 5HL (VIA XFMR 5TK) | Wires: 4 | MCB Rating: 100 A | Mounting: Surface
Serves: | Lugs: Single Lugs | Enclosure: Type 1

Notes:

CKT	Circuit Description	Trip	Poles	CB	A		B		C		CB	Poles	Trip	Circuit Description	CKT	
1	RECEPTACLES	20 A	1	--	900	300					--	1	20 A	BR-1 BRAKE LATHE (CNC)	2	
3	RECEPTACLES	20 A	1	--			900	300			--	1	20 A	BR-2 BRAKE LATHE (STAR)	4	
5	RECEPTACLES	20 A	1	--					900	300	--	1	20 A	BR-2 BRAKE LATHE (STAR)	6	
7	BR-4 WORKBENCH	20 A	1	--	180	300					--	1	20 A	BR-2 BRAKE LATHE (STAR)	8	
9	BR-4 WORKBENCH	20 A	1	--			180	**420**			**--**	1	20 A	**EF 5-38 (1/4)**	10	1
11	BR-17 JIB CRANE	20 A	1	--					670	510	--	1	20 A	BR-9 DUST COLLECTOR	12	
13	BR-17 JIB CRANE	20 A	1	--	670	1130					--	1	20 A	BR-11 ADJ WORK TABLE	14	
15	BR-8	20 A	1	--			0	1130			--	1	20 A	BR-14 TOOL BIT GRINDER	16	
17	Spare	20 A	1	--					0	1840	--	1	40 A	BR-15 PALLET WRAPPER	18	
19	PC-12 JIB CRANE	20 A	3	--	1800	180					--	1	20 A	BR-16 ELECTRIC LIFT TRUCK	20	
21	--	--	--	--			0	300			--	1	20 A	BR-2 BRAKE LATHE (STAR)	22	
23	--	--	--	--					0	0	--	1	20 A	Spare	24	
25	Space	--	1	--	--	830					--	1	20 A	PC-2 ABRASIVE PARTS WASH	26	
27	Space	--	1	--			--	830			--	1	20 A	PC-2 ABRASIVE PARTS WASH	28	
29	Space	--	1	--					--	0	--	1	20 A	Spare	30	
31	Space	--	1	--	--	1130					--	1	20 A	COILING DOOR	32	
33	Space	--	1	--			--	510			--	1	20 A	UH 5-6	34	
35	Space	--	1	--					--	510	--	1	20 A	UH 5-7	36	
37	Space	--	1	--	--	--					--	1	--	Space	38	
39	Space	--	1	--			--	--			--	1	--	Space	40	
41	Space	--	1	--					--	--	--	1	--	Space	42	
				Total Load:	**7.42 kVA**		**4.57 kVA**		**4.73 kVA**							
				Total Amps:	**62 A**		**38 A**		**40 A**							

Load Classification	Connected Load	Demand Factor	Estimated Demand	Panel Totals	
Spare	16720 VA	100.00%	16720 VA		
				Total Conn. Load:	**16720 VA**
				Total Est. Demand:	**16720 VA**
				Total Conn.:	**46 A**
				Total Est. Demand:	**46 A**
				Existing Total Conn. Load:	**16970 VA**
				Existing Total Conn:	**47 A**

CB Legend (blank = circuit breaker):
G = GFCI S = Shunt Trip D = Switching Duty A = AFCI H = HID Rated C = HACR Rated † = Existing Circuit ‡ = Revised Circuit

Notes:

Stantec Panel

Name: **5LP** | Volts: 208Y/120V | Mains Type: MLO | Type:
Location: ELECTRICAL RM 202 | Phases: 3 | Mains Rating: 225 A | AIC Rating: 10K
Supply From: DB5B | Wires: 4 | Max Rating: 225 A | Mounting: Surface
Serves: | Lugs: Single Lugs | Enclosure: Type 1

Notes:

CKT	Circuit Description	Trip	Poles	CB	A		B		C		CB	Poles	Trip	Circuit Description	CKT	
1	REC. REBUILD OFFICE	20 A	1	--	180	180					--	1	20 A	REC. MANAGER OFFICE	2	
3	REC. INTERNS OFFICE	20 A	1	--			360	180			--	1	20 A	REC. ASSIST. OFFICE	4	
5	PROJECTION SCREEN	20 A	1	--					510	1000	--	1	20 A	REFRIGERATOR	6	
7	RECEPTACLES	20 A	1	--	900	1200					--	1	20 A	MICROWAVE	8	
9	RECEPTACLES	20 A	1	--			540	180			--	1	20 A	RECEPTACLE COUNTER	10	
11	RECEPTACLES	20 A	1	--					540	1200	--	1	20 A	GARBAGE DISPOSAL	12	
13	RECEPTACLES	20 A	1	--	720	720					--	1	20 A	RECEPTACLES	14	
15	RECEPTACLES	20 A	1	--			900	720			--	1	20 A	RECEPTACLES	16	
17	RECEPTACLES	20 A	1	--					720	720	--	1	20 A	RECEPTACLES	18	
19	RECEPTACLES	20 A	1	--	720	360					--	1	20 A	RECEPTACLES	20	
21	RECEPTACLES	20 A	1	--			720	540			--	1	20 A	RECEPTACLES	22	
23	RECEPTACLES	20 A	1	--					540	360	--	1	20 A	RECEPTACLES	24	
25	ROOF RECPT.	20 A	1	--	0	900					--	1	20 A	RECEPTACLES RESTROOM	26	
27	Spare	20 A	1	--			0	500			--	1	20 A	DRINKING FOUNTAIN	28	
29	Spare	20 A	1	--					0	1300	--	1	20 A	COPIER	30	
31	PANEL 5LW	50 A	3	--	1080	**156**					**--**	1	20 A	**EF 5-11 (1/15)**	32	1
33	--	--	--	--			900	55			--	1	20 A	EF 5-12 (1/15)	34	
35	--	--	--	--					720	**420**	**--**	1	20 A	**EF 5-13 (1/4)**	36	1
37	PANEL 5U	40 A	2	--	2340	55					--	1	20 A	EF -14 (1/15)	38	
39	--	--	--	--			2160	55			--	1	20 A	EF 5-15 (1/15)	40	
41	HOT WATER DISPENSER	20 A	1	--					1300	20	--	1	20 A	BD-1 BY-PASS DAMPER	42	
				Total Load:	**9.51 kVA**		**7.81 kVA**		**9.35 kVA**							
				Total Amps:	**81 A**		**65 A**		**80 A**							

Load Classification	Connected Load	Demand Factor	Estimated Demand	Panel Totals	
Spare	26671 VA	100.00%	26671 VA		
				Total Conn. Load:	**26671 VA**
				Total Est. Demand:	**26671 VA**
				Total Conn.:	**74 A**
				Total Est. Demand:	**74 A**
				Existing Total Conn. Load:	**26775 VA**
				Existing Total Conn:	**74 A**

CB Legend (blank = circuit breaker):
G = GFCI S = Shunt Trip D = Switching Duty A = AFCI H = HID Rated C = HACR Rated † = Existing Circuit ‡ = Revised Circuit

Notes:

5LK	5LM
5LN	5LP

REGISTERED PROFESSIONAL ENGINEER
PAUL K. ERICSON
No. 11219
exp.06/30/2025
ELECTRICAL
STATE OF CALIFORNIA

05-13-2024

Stantec
801 S. Figueroa Street, Suite 300
Los Angeles, CA 90017

Copyright Reserved
The Contractor shall verify and be responsible for all dimensions. DO NOT scale the drawing - any errors or omissions shall be reported to Stantec without delay.
The Copyrights to all designs and drawings are the property of Stantec. Reproduction or use for any purpose other than that authorized by Stantec is forbidden.

REVISION	DESCRIPTION	DATE
4	100% RESUBMITTAL	05/13/2024
3	100% CONSTRUCTION DRAWING SUBMITTAL	03/27/2024
2	90% UPDATED CONSTRUCTION SUBMITTAL	02/13/2024
1	90% CONSTRUCTION DRAWING SUBMITTAL	12/07/2023

REPLACEMENT OF MECHANICAL UNITS AT SANTA ANA BUS BASE
4301 W. MAC ARTHUR BLVD., SANTA ANA, CA

PANEL SCHEDULES

JOB #:
DESIGN BY: IZ
DRAWN BY: AD
CHECKED BY: PKE
DATE: 02/13/2024
SCALE: NTS
SHEET: **E-702W**

OCTA
ORANGE COUNTY
TRANSPORTATION AUTHORITY
550 SOUTH MAIN STREET, ORANGE, CA

Autodesk Docs://2014233703_Santa_Ana_Bus/elec_SantaAnaBus_2014233703.rvt
5/8/2024 9:59:50 AM

KEY NOTES:

1 EXISTING EQUIPMENT TO BE REPLACED.

Stantec — Panel

Name: **5LA**	Volts: 208Y/120V	Mains Type: MLO	Type:
Location:	Phases: 3	Mains Rating: 150 A	AIC Rating: 10K
Supply From:	Wires: 4	Max Rating: 150 A	Mounting: Surface
Serves:		Lugs: Single Lugs	Enclosure: Type 1

Notes:

CKT	Circuit Description	Trip	Poles	CB	A	A	B	B	C	C	CB	Poles	Trip	Circuit Description	CKT	Key Note
1	RECEPTACLES	20 A	1	--	720	300					--	1	20 A	PANEL 'LPCSE'	2	
3	RECEPTACLES	20 A	1	--			720	300			--	1	20 A	CAMERAS 1&2	4	
5	PORTABLE LIGHT REC.	20 A	1	--					80	**768**	--	1	20 A	**EF 5-35**	6	1
7	WS 5-1	20 A	1	--	180	0					--	1	20 A	LIFT CONTROL	8	
9	Spare	20 A	1	--			0	0			--	1	20 A	Spare	10	
11	Spare	20 A	1	--					0	0	--	1	20 A	Spare	12	
13	Space	--	1	--	--	--					--	1	--	Space	14	
15	Space	--	1	--			--	--			--	1	--	Space	16	
17	Space	--	1	--					--	--	--	1	--	Space	18	
19	Space	--	1	--	--	--					--	1	--	Space	20	
21	Space	--	1	--			--	--			--	1	--	Space	22	
23	Space	--	1	--					--	--	--	1	--	Space	24	
25	Space	--	1	--	--	--					--	1	--	Space	26	
27	Space	--	1	--			--	--			--	1	--	Space	28	
29	Space	--	1	--					--	--	--	1	--	Space	30	
31	Space	--	1	--	--	--					--	1	--	Space	32	
33	Space	--	1	--			--	--			--	1	--	Space	34	
35	Space	--	1	--					--	--	--	1	--	Space	36	
37	Space	--	1	--	--	7135					--	3	100 A	PANEL 5LB	38	
39	Space	--	1	--			--	7510			--	--	--	--	40	
41	Space	--	1	--					--	5735	--	--	--	--	42	
	Total Load:				**8.34 kVA**		**8.53 kVA**		**6.58 kVA**							
	Total Amps:				**72 A**		**73 A**		**55 A**							

Load Classification	Connected Load	Demand Factor	Estimated Demand	Panel Totals	
Spare	23448 VA	100.00%	23448 VA		
				Total Conn. Load:	**23448 VA**
				Total Est. Demand:	**23448 VA**
				Total Conn.:	**65 A**
				Total Est. Demand:	**65 A**

CB Legend (blank = circuit breaker):
G = GFCI S = Shunt Trip D = Switching Duty A = AFCI H = HID Rated C = HACR Rated † = Existing Circuit ‡ = Revised Circuit

Notes:

Stantec — Panel

Name: **5LQ**	Volts: 208Y/120V	Mains Type: MLO	Type:
Location: SMALL TOOL RM 130	Phases: 3	Mains Rating: 225 A	AIC Rating: 10K
Supply From: DB5B	Wires: 4	Max Rating: 225 A	Mounting: Surface
Serves:		Lugs: Single Lugs	Enclosure: Type 1

Notes:

Key Note	CKT	Circuit Description	Trip	Poles	CB	A	A	B	B	C	C	CB	Poles	Trip	Circuit Description	CKT
	1	RECEPTACLES	20 A	1	--	900	1000					--	1	20 A	REFRIGERATOR	2
	3	RECEPTACLES	20 A	1	--			900	1000			--	1	20 A	REFRIGERATOR	4
	5	RECEPTACLES	20 A	1	--					900	360	--	1	20 A	RECEPTACLES COUNTER	6
	7	RECEPTACLES	20 A	1	--	540	1590					--	1	20 A	GARBAGE DISPOSAL	8
	9	RECEPTACLES	20 A	1	--			540	1300			--	1	20 A	WATER HEATER	10
	11	RECEPTACLES	20 A	1	--					540	1200	--	1	20 A	MICROWAVE	12
	13	RECEPTACLES	20 A	1	--	720	1200					--	1	20 A	MICROWAVE	14
	15	RECEPTACLES	20 A	1	--			540	1200			--	1	20 A	MICROWAVE	16
	17	RECEPTACLES	20 A	1	--					720	1200	--	1	20 A	VENDING MACHINE	18
	19	RECEPTACLES	20 A	1	--	720	1200					--	1	20 A	VENDING MACHINE	20
	21	RECEPTACLES	20 A	1	--			720	1200			--	1	20 A	VENDING MACHINE	22
	23	RECEPTACLES	20 A	1	--					900	1200	--	1	20 A	VENDING MACHINE	24
	25	REC. WARRANTY OFF.	20 A	1	--	540	1200					--	1	20 A	VENDING MACHINE	26
	27	REC. PARTS (EAST)	20 A	1	--			360	500			--	1	20 A	DRINING FOUNTAIN	28
	29	REC. PARTS OFFICE	20 A	1	--					180	1590	--	1	20 A	RR-20 FREON RECOVERY	30
	31	REC. PARTS (SOUTH)	20 A	1	--	360	360					--	1	20 A	RECEPTACLES	32
	33	UH 5-2	20 A	1	--			385	540			--	1	20 A	RECEPTACLES	34
	35	UH 5-3	20 A	1	--					385	540	--	1	20 A	RECEPTACLES	36
1	37	**AC 5-2**	**25 A**	2	**--**	**1737**	440					--	3	50 A	PANEL 5V	38
	39	**--**	**--**	**--**	**--**			**1737**	1300			--	--	--	--	40
	41	ROOF RECEPTACLES	20 A	1	--					720	720	--	--	--	--	42
		Total Load:				**12.51 kVA**		**12.22 kVA**		**11.16 kVA**						
		Total Amps:				**106 A**		**103 A**		**93 A**						

Load Classification	Connected Load	Demand Factor	Estimated Demand	Panel Totals	
Spare	35884 VA	100.00%	35884 VA		
				Total Conn. Load:	**35884 VA**
				Total Est. Demand:	**35884 VA**
				Total Conn.:	**100 A**
				Total Est. Demand:	**100 A**
				Existing Total Conn. Load:	**33530 VA**
				Existing Total Conn:	**99 A**

CB Legend (blank = circuit breaker):
G = GFCI S = Shunt Trip D = Switching Duty A = AFCI H = HID Rated C = HACR Rated † = Existing Circuit ‡ = Revised Circuit

Notes:

Stantec — Panel

Name: **5LS**	Volts: 208Y/120V	Mains Type: MLO	Type:
Location: STORAGE 155	Phases: 3	Mains Rating: 100 A	AIC Rating: 10K
Supply From: 5LK	Wires: 4	Max Rating: 100 A	Mounting: Surface
Serves:		Lugs: Single Lugs	Enclosure: Type 1

Notes:

CKT	Circuit Description	Trip	Poles	CB	A	A	B	B	C	C	CB	Poles	Trip	Circuit Description	CKT	Key Note
1	COIN COUNTER	20 A	1	--	500	**180**					**--**	1	20 A	**EF 5-26 (1/10)**	2	1
3	COIN COUNTER	20 A	1	--			500	30			--	1	20 A	EF 5-27 (1/40)	4	
5	CURRENCY STRAPPER	20 A	1	--					500	**420**	**--**	1	20 A	**EF 5-41 (1/4)**	6	1
7	COMPUTER PRINTER	20 A	1	--	500	180					--	1	20 A	ROOF RECEPTACLE	8	
9	COIN COUNTER	20 A	1	--			500	--			--	1	--	Space	10	
11	COIN COUNTER	20 A	1	--					500	--	--	1	--	Space	12	
13	CURRENCY STRAPPER	20 A	1	--	500	--					--	1	--	Space	14	
15	COIN COUNTER	20 A	1	--			500	--			--	1	--	Space	16	
17	COIN COUNTER	20 A	1	--					500	--	--	1	--	Space	18	
19	Space	--	1	--	--	--					--	1	--	Space	20	
21	Space	--	1	--			--	--			--	1	--	Space	22	
23	Space	--	1	--					--	--	--	1	--	Space	24	
25	Space	--	1	--	--	--					--	1	--	Space	26	
27	Space	--	1	--			--	--			--	1	--	Space	28	
29	Space	--	1	--					--	--	--	1	--	Space	30	
31	Space	--	1	--	--	--					--	1	--	Space	32	
33	Space	--	1	--			--	--			--	1	--	Space	34	
35	Space	--	1	--					--	--	--	1	--	Space	36	
37	Space	--	1	--	--	--					--	1	--	Space	38	
39	Space	--	1	--			--	--			--	1	--	Space	40	
41	Space	--	1	--					--	--	--	1	--	Space	42	
	Total Load:				**1.86 kVA**		**1.53 kVA**		**1.92 kVA**							
	Total Amps:				**16 A**		**13 A**		**16 A**							

Load Classification	Connected Load	Demand Factor	Estimated Demand	Panel Totals	
Spare	5310 VA	100.00%	5310 VA		
				Total Conn. Load:	**5310 VA**
				Total Est. Demand:	**5310 VA**
				Total Conn.:	**15 A**
				Total Est. Demand:	**15 A**
				Existing Total Conn. Load:	**5430 VA**
				Existing Total Conn:	**15 A**

CB Legend (blank = circuit breaker):
G = GFCI S = Shunt Trip D = Switching Duty A = AFCI H = HID Rated C = HACR Rated † = Existing Circuit ‡ = Revised Circuit

Notes:

Stantec — Panel

Name: **5LT**	Volts: 240V/120V	Mains Type: MCB	Type:
Location: ELECTRICAL RM 202	Phases: 1	Mains Rating: 225 A	AIC Rating: 10K
Supply From: XFMR 5TM	Wires: 3	MCB Rating: 125 A	Mounting: Surface
Serves:		Lugs: Single Lugs	Enclosure: Type 1

Notes:

Key Note	CKT	Circuit Description	Trip	Poles	CB	A	A	B	B	C	C	CB	Poles	Trip	Circuit Description	CKT
	1	OVERHEAD SECT. DOOR	20 A	1	--	1590	1590					--	1	20 A	OVERHEAD SECT. DOOR	2
	3	OVERHEAD SECT. DOOR	20 A	1	--			1590	1590			--	1	20 A	OVERHEAD SECT. DOOR	4
	5	OVERHEAD SECT. DOOR	20 A	1	--	1590	1590					--	1	20 A	OVERHEAD SECT. DOOR	6
	7	OVERHEAD SECT. DOOR	20 A	1	--			1590	1590			--	1	20 A	OVERHEAD SECT. DOOR	8
	9	OVERHEAD SECT. DOOR	20 A	1	--	1590	1590					--	1	20 A	OVERHEAD SECT. DOOR	10
	11	OVERHEAD SECT. DOOR	20 A	1	--			1590	0			--	1	20 A	HVAC TIME CLOCK	12
1	13	**EF 5-42**	20 A	1	**--**	**696**	0					--	1	20 A	Spare	14
	15	Space	--	1	--			--	--			--	1	--	Space	16
	17	Space	--	1	--	--	--					--	1	--	Space	18
	19	Space	--	1	--			--	--			--	1	--	Space	20
		Total Load:				**10.24 kVA**		**7.95 kVA**		**0.00 kVA**						
		Total Amps:				**85 A**		**66 A**		**0 A**						

Load Classification	Connected Load	Demand Factor	Estimated Demand	Panel Totals	
Spare	18186 VA	100.00%	18186 VA		
				Total Conn. Load:	**18186 VA**
				Total Est. Demand:	**18186 VA**
				Total Conn.:	**76 A**
				Total Est. Demand:	**76 A**
				Existing Total Conn. Load:	**18320 VA**
				Existing Total Conn:	**76 A**

CB Legend (blank = circuit breaker):
G = GFCI S = Shunt Trip D = Switching Duty A = AFCI H = HID Rated C = HACR Rated † = Existing Circuit ‡ = Revised Circuit

Notes:

5LA	5LQ
5LS	5LT

REGISTERED PROFESSIONAL ENGINEER
PAUL K. ERICSON
No. 11219
exp.06/30/2025
ELECTRICAL
STATE OF CALIFORNIA

05-13-2024

Stantec
801 S. Figueroa Street, Suite 300
Los Angeles, CA 90017

Copyright Reserved
The Contractor shall verify and be responsible for all dimensions. DO NOT scale the drawing - any errors or omissions shall be reported to Stantec without delay.
The Copyrights to all designs and drawings are the property of Stantec. Reproduction or use for any purpose other than that authorized by Stantec is forbidden.

REVISION	DESCRIPTION	DATE
4	100% RESUBMITTAL	05/13/2024
3	100% CONSTRUCTION DRAWING SUBMITTAL	03/27/2024
2	90% UPDATED CONSTRUCTION SUBMITTAL	02/13/2024
1	90% CONSTRUCTION DRAWING SUBMITTAL	12/07/2023

REPLACEMENT OF MECHANICAL UNITS AT SANTA ANA BUS BASE

4301 W. MAC ARTHUR BLVD., SANTA ANA, CA

PANEL SCHEDULES

JOB #:	
DESIGN BY:	IZ
DRAWN BY:	AD
CHECKED BY:	PKE
DATE:	02/13/2024
SCALE:	NTS
SHEET:	**E-703W**

OCTA
ORANGE COUNTY TRANSPORTATION AUTHORITY
550 SOUTH MAIN STREET, ORANGE, CA

Stantec — Panel

Name: **6LB** | Volts: 208Y/120V | Mains Type: MLO | Type:
Location: | Phases: 3 | Mains Rating: 225 A | AIC Rating: 10
Supply From: | Wires: 4 | Max Rating: 225 A | Mounting: Surface
Serves: | Lugs: Single Lugs | Enclosure: Type 1

Notes:

CKT	Circuit Description	Trip	Poles	CB	A		B		C		CB	Poles	Trip	Circuit Description	CKT
1	**EF 6-4 (1/15)**	20 A	1	--	**156**	**3318**					--	2	**50 A**	**RTU 6-1**	2
3	EF 6-5 (1/60)	20 A	1	--			20	**3318**			--	--	--	--	4
5	**EF 6-6 (1/10)**	20 A	1	--					**180**	**2143**	--	2	40 A	**HP 6-1**	6
7	BC-14 FLUID MANAGEMENT	20 A	1	--	500	**2143**					--	--	--	--	8
9	**EF 6-8 (1/10)**	20 A	1	--			**180**	180			--	1	20 A	FACP-6	10
11	WATER HEATER/CIRC. PUMP	20 A	1	--					600	180	--	1	20 A	CC6	12
13	DRINIKING FOUNTAIN	20 A	1	--	500	100					--	1	20 A	FUEL DISPENSER/CONT.	14
15	REC. OFFICE	20 A	1	--			360	100			--	1	20 A	FUEL DISPENSER/CONT.	16
17	RECEPTACLES DATA RACK	20 A	1	--					360	100	--	1	20 A	FUEL DISPENSER/CONT.	18
19	RECEPTACLES DATA RACK	20 A	1	--	360	100					--	1	20 A	FUEL DISPENSER/CONT.	20
21	RECEPTACLES DROP	20 A	1	--			360	100			--	1	20 A	FUEL DISPENSER/CONT.	22
23	RECEPTACLES DROP	20 A	1	--					360	1590	--	1	20 A	F-2 GASOLINE DISPENSER	24
25	RECEPTACLES	20 A	1	--	540	533					--	3	20 A	SP-1	26
27	RECEPTACLES	20 A	1	--			360	533			--	--	--	--	28
29	RECEPTACLES ROOF RTU-61	20 A	1	--					360	533	--	--	--	--	30
31	RECEPTACLES RESTROOM	20 A	1	--	360	150					--	1	20 A	AUTO DRAIN VALVES	32
33	RECEPTACLES PUMP ROOM	20 A	1	--			540	800			--	1	30 A	POWER SUPPLY CAMERAS	34
35	RECEPTACLES TELEPHONE	20 A	1	--					360	800	--	1	20 A	POWER SUPPLY CAMERAS	36
37	DRINIKING FOUNTAIN	20 A	1	--	500	**1389**					--	2	**25 A**	**AC 6-1**	38
39	LAV/UR CONTROLS	20 A	1	--			300	**1389**			--	--	--	--	40
41	PHOTOSENSOR CTRL CAB.	20 A	1	--					100	100	--	1	20 A	FSD RM 116 & 118	42
				Total Load:	**10.65 kVA**		**8.54 kVA**		**7.77 kVA**						
				Total Amps:	**90 A**		**72 A**		**65 A**						

Load Classification	Connected Load	Demand Factor	Estimated Demand	Panel Totals	
Spare	26955 VA	100.00%	26955 VA	**Total Conn. Load:**	**26955 VA**
				Total Est. Demand:	**26955 VA**
				Total Conn.:	**75 A**
				Total Est. Demand:	**75 A**
				Existing Total Conn. Load:	**21984 VA**
				Existing Total Conn:	**61 A**

CB Legend (blank = circuit breaker):
G = GFCI S = Shunt Trip D = Switching Duty A = AFCI H = HID Rated C = HACR Rated † = Existing Circuit ‡ = Revised Circuit

Notes:

Stantec — Panel

Name: **8LA** | Volts: 208Y/120V | Mains Type: MCB | Type:
Location: DETAILING/CLEANING 101 | Phases: 3 | Mains Rating: 225 A | AIC Rating: 10
Supply From: 8HA (VIA XFMR 8TA) | Wires: 4 | MCB Rating: 100 A | Mounting: Surface
Serves: | Lugs: Single Lugs | Enclosure: Type 1

Notes:

CKT	Circuit Description	Trip	Poles	CB	A		B		C		CB	Poles	Trip	Circuit Description	CKT
1	RECEPTACLES	20 A	1	--	720	900					--	3	20 A	CL-11 WASHER	2
3	RECEPTACLES	20 A	1	--			720	900			--	--	--	--	4
5	RECEPTACLES	20 A	1	--					720	900	--	--	--	--	6
7	RECEPTACLES	20 A	1	--	500	900					--	3	20 A	CL-12 DRYER	8
9	RECEPTACLES	20 A	1	--			500	900			--	--	--	--	10
11	RECEPTACLES	20 A	1	--					500	900	--	--	--	--	12
13	RECEPTACLES	20 A	1	--	500	360					--	1	20 A	RECEPTACLES DROP	14
15	CAMERAS 12 & 13	20 A	1	--			300	360			--	1	20 A	RECEPTACLES DROP	16
17	Spare	20 A	1	--					0	360	--	1	20 A	RECEPTACLES DROP	18
19	Spare	20 A	1	--	0	360					--	1	20 A	RECEPTACLES DROP	20
21	Spare	20 A	1	--			0	0			--	1	20 A	Spare	22
23	Spare	20 A	1	--					0	**348**	--	1	20 A	**EF 8-1**	24
25	Spare	20 A	1	--	0	1120					--	1	20 A	VACUUM REEL	26
27	Spare	20 A	1	--			0	1120			--	1	20 A	VACUUM REEL	28
29	Spare	20 A	1	--					0	1120	--	1	20 A	VACUUM REEL	30
31	Spare	20 A	1	--	0	1120					--	1	20 A	VACUUM REEL	32
33	Spare	20 A	1	--			0	300			--	1	20 A	Spare	34
35	Spare	20 A	1	--					0	50	--	1	20 A	WATER HEATER	36
37	Space	--	1	--	--	50					--	1	20 A	DRAIN VALVE	38
39	Space	--	1	--			--	--			--	1	--	Space	40
41	Space	--	1	--					--	--	--	1	--	Space	42
				Total Load:	**6.53 kVA**		**5.10 kVA**		**4.90 kVA**						
				Total Amps:	**55 A**		**43 A**		**41 A**						

Load Classification	Connected Load	Demand Factor	Estimated Demand	Panel Totals	
Spare	16528 VA	100.00%	16528 VA	**Total Conn. Load:**	**16528 VA**
				Total Est. Demand:	**16528 VA**
				Total Conn.:	**46 A**
				Total Est. Demand:	**46 A**
				Existing Total Conn. Load:	**16850 VA**
				Existing Total Conn:	**47 A**

CB Legend (blank = circuit breaker):
G = GFCI S = Shunt Trip D = Switching Duty A = AFCI H = HID Rated C = HACR Rated † = Existing Circuit ‡ = Revised Circuit

Notes:

KEY NOTES:

1 EXISTING EQUIPMENT TO BE REPLACED.

REGISTERED PROFESSIONAL ENGINEER PAUL K. ERICSON No. 11219 exp.06/30/2025 ELECTRICAL STATE OF CALIFORNIA

05-13-2024

6LB	7LA
8LA	---

Stantec
801 S. Figueroa Street, Suite 300
Los Angeles, CA 90017

Copyright Reserved
The contractor shall verify and be responsible for all dimensions. DO NOT scale the drawing - any errors or omissions shall be reported to Stantec without delay.
This drawing is the property of Stantec and shall not be reproduced or used for other purposes than that authorized by Stantec in writing.

REVISION	DESCRIPTION	DATE
4	100% RESUBMITTAL	05/13/2024
3	100% CONSTRUCTION DRAWING SUBMITTAL	03/27/2024
2	90% UPDATED CONSTRUCTION SUBMITTAL	02/13/2024
1	90% CONSTRUCTION DRAWING SUBMITTAL	12/07/2023

REPLACEMENT OF MECHANICAL UNITS AT SANTA ANA BUS BASE

4301 W. MAC ARTHUR BLVD., SANTA ANA, CA

PANEL SCHEDULES

JOB #:	
DESIGN BY:	IZ
DRAWN BY:	AD
CHECKED BY:	PKE
DATE:	02/13/2024
SCALE:	NTS
SHEET:	E-704W

OCTA

ORANGE COUNTY TRANSPORTATION AUTHORITY
550 SOUTH MAIN STREET, ORANGE, CA

Autodesk Docs://2014233703_Santa_Ana_Bus/elec_SantaAnaBus_2014233703.rvt

EQUIP TAG	DESCRIPTION	LOCATION	SERVICE	MOTOR POWER (OR) HP	ELECTRICAL DATA VOLTS	ø	HZ	FLA(A)	MCA(A)	MOCP(A)	DISCONNECT FRAME(A)	FUSE SIZE (A)	BY	STARTER TYPE	BY	EMERGENCY / NORMAL	CONDUIT REF #	CONDUIT	WIRE	PANEL	CIRCUIT	REMARK
ROOF TOP UNIT, 65 kAIC RATED																						
RTU 4-1	PACKAGED ROOFTOP UNIT	OPERATIONS BUILDING	OPER. BLDG	17.4 kW	480	3	60	-	41	50	60	50	DIV.26	N/A	N/A	NORMAL	19	1"	3#6 & 1#8G	DB4	4	POWER WIRING AND DISCONNECT BY EC
																						120V CIRCUIT FOR IONIZATION SYSTEM
RTU 4-2	PACKAGED ROOFTOP UNIT	OPERATIONS BUILDING	OPER. BLDG	7.1 kW	480	3	60	-	18	20	30	20	DIV.26	N/A	N/A	NORMAL	20	3/4"	3#12 & 1#12G	DB4	5	POWER WIRING AND DISCONNECT BY EC
																						120V CIRCUIT FOR IONIZATION SYSTEM
RTU 4-3	PACKAGED ROOFTOP UNIT	OPERTIONS BUILDING	OPER. BLDG	11.8 kW	480	3	60	-	29	40	60	40	DIV.26	N/A	N/A	NORMAL	21	3/4"	3#8 & 1#10G	DB4	6	POWER WIRING AND DISCONNECT BY EC
																						120V CIRCUIT FOR IONIZATION SYSTEM
RTU 4-4	PACKAGED ROOFTOP UNIT	OPERATIONS BUILDING	OPER. BLDG	10.5 kW	480	3	60	-	25	30	30	30	DIV.26	N/A	N/A	NORMAL	22	3/4"	3#10 & 1#10G	DB4	7	POWER WIRING AND DISCONNECT BY EC
																						120V CIRCUIT FOR IONIZATION SYSTEM
RTU 5-1	PACKAGED ROOFTOP UNIT	MAINTENANCE BUILDING	2ND FLR OFFICES	19.7 kW	480	3	60	-	49	60	60	50	DIV.26	N/A	N/A	NORMAL	106	1"	3#6 & 1#8G	5HP	1	POWER WIRING AND DISCONNECT BY EC
																						120V CIRCUIT FOR IONIZATION SYSTEM
RTU 5-2	PACKAGED ROOFTOP UNIT	MAINTENANCE BUILDING	BREAK ROOM	17.6 kW	480	3	60	-	41	50	60	50	DIV.26	N/A	N/A	NORMAL	107	1"	3#6 & 1#8G	5HP	2	POWER WIRING AND DISCONNECT BY EC
																						120V CIRCUIT FOR IONIZATION SYSTEM
RTU 5-3	PACKAGED ROOFTOP UNIT	MAINTENANCE BUILDING	REVENUE OFFICES	17.6 kW	480	3	60	-	41	50	60	50	DIV.26	N/A	N/A	NORMAL	108	1-1/4"	3#4 & 1#8G	5HP	3	POWER WIRING AND DISCONNECT BY EC
																						120V CIRCUIT FOR IONIZATION SYSTEM
RTU 5-4	PACKAGED AIR...	MAINTENANCE BUILDING	OFFICE	1.8 kW	208	1	60	-	20.6	30	30	30	DIV.26	N/A	N/A	NORMAL	-	3/4"	2#10 & 1#10G	5LM	31,33	POWER WIRING AND DISCONNECT BY EC
																						120V CIRCUIT FOR IONIZATION SYSTEM
RTU 5-5	PACKAGED AIR...	MAINTENANCE BUILDING	OFFICE	1.8 kW	208	1	60	-	20.6	30	30	30	DIV.26	N/A	N/A	NORMAL	-	3/4"	2#10 & 1#10G	5LM	35,37	POWER WIRING AND DISCONNECT BY EC
																						120V CIRCUIT FOR IONIZATION SYSTEM
RTU 6-1	PACKAGED AIR...	FUEL/BRAKE/TIRE REPAIR...	FUEL BLDG	4.1 kW	208	1	60	-	31.9	50	60	50	DIV.26	N/A	N/A	NORMAL	-	3/4"	2#10 & 1#10G	6LB	2,4	POWER WIRING AND DISCONNECT BY EC
																						120V CIRCUIT FOR IONIZATION SYSTEM
HEATING PUMP, 65 kAIC RATED																						
HP 5-1	HEAT PUMP	MAINTENANCE BUILDING	BLDG OFFICE		208	1	60	-	20.6	30	30	30	DIV.26	N/A	N/A	NORMAL	-	3/4"	2#10 & 1#10G	5LG	22.24	POWER WIRING AND DISCONNECT BY EC
																						120V CIRCUIT FOR IONIZATION SYSTEM
HP 6-1	HEAT PUMP	FUEL/BRAKE/TIRE REPAIR...	CONTROL		208	1	60	-	20.6	30	30	30	DIV.26	N/A	N/A	NORMAL	-	3/4"	2#10 & 1#10G	LB	6,8	POWER WIRING AND DISCONNECT BY EC
																						120V CIRCUIT FOR IONIZATION SYSTEM
AIR CONDITIONING UNIT, 65 kAIC RATED																						
AC 4-1	PACKAGED COOLING UNIT	OPERATIONS BUILDING	COMPUTER ROOM	3.4kW	208	1	60	-	16.7	25	30	25	DIV.26	N/A	N/A	NORMAL	-	3/4"	2#10 & 1#10G	4LC	30,32	POWER WIRING AND DISCONNECT BY EC
																						120V CIRCUIT FOR LIGHT AND RECEPTACLE
AC 4-2	PACKAGED COOLING UNIT	OPERATIONS BUILDING	TELECOM ROOM	3.4kW	208	1	60	-	16.7	25	30	25	DIV.26	N/A	N/A	NORMAL	-	3/4"	2#10 & 1#10G	4LC	34,36	POWER WIRING AND DISCONNECT BY EC
																						120V CIRCUIT FOR LIGHT AND RECEPTACLE
AC 5-1	PACKAGED COOLING UNIT	MAINTENANCE BUILDING	COMM ROOM	3.4kW	208	1	60	-	16.7	25	30	25	DIV.26	N/A	N/A	NORMAL	-	3/4"	2#10 & 1#10G	5LJ	34,36	POWER WIRING AND DISCONNECT BY EC
																						120V CIRCUIT FOR LIGHT AND RECEPTACLE
AC 5-2	PACKAGED COOLING UNIT	MAINTENANCE BUILDING	LAN ROOM	3.4kW	208	1	60	-	16.7	25	30	25	DIV.26	N/A	N/A	NORMAL	-	3/4"	2#10 & 1#10G	5LQ	37,39	POWER WIRING AND DISCONNECT BY EC
																						120V CIRCUIT FOR LIGHT AND RECEPTACLE
AC 6-1	PACKAGED COOLING UNIT	FUEL/BRAKE/TIRE REPAIR...	COMM	3.4kW	208	1	60	-	16.7	25	30	25	DIV.26	N/A	N/A	NORMAL	-	3/4"	2#10 & 1#10G	6LB	38,40	POWER WIRING AND DISCONNECT BY EC
																						120V CIRCUIT FOR LIGHT AND RECEPTACLE
MAKEUP AIR UNITS																						
MAU 5-1	MAKEUP AIR UNIT	MAINTENANCE BUILDING	OPER. BLDG	20	480	3	60	28.1	35	50	60	50	DIV.26	N/A	N/A	NORMAL	-	3/4"	3#10 & 1#10G	5HP	4	POWER WIRING AND DISCONNECT BY EC
MAU 5-2	MAKEUP AIR UNIT	MAINTENANCE BUILDING	OPER. BLDG	15	480	3	60	22.1	27.6	40	60	40	DIV.26	N/A	N/A	NORMAL	110	3/4"	3#10 & 1#10G	5HP	5	POWER WIRING AND DISCONNECT BY EC
MAU 5-3	MAKEUP AIR UNIT	MAINTENANCE BUILDING	OPER. BLDG	15	480	3	60	22.1	27.6	40	60	40	DIV.26	N/A	N/A	NORMAL	111	3/4"	3#10 & 1#10G	5HP	6	POWER WIRING AND DISCONNECT BY EC
MAU 5-4	MAKEUP AIR UNIT	MAINTENANCE BUILDING	OPER. BLDG	15	480	3	60	22.1	27.6	40	60	40	DIV.26	N/A	N/A	NORMAL	112	3/4"	3#10 & 1#10G	5HP	7	POWER WIRING AND DISCONNECT BY EC
MAU 5-5	MAKEUP AIR UNIT	MAINTENANCE BUILDING	2ND FLR OFFICES	15	480	3	60	22.1	27.6	40	60	40	DIV.26	N/A	N/A	NORMAL	113	3/4"	3#10 & 1#10G	5HP	8	POWER WIRING AND DISCONNECT BY EC
MAU 5-6	MAKEUP AIR UNIT	MAINTENANCE BUILDING	BREAK ROOM	15	480	3	60	22.1	27.6	40	60	40	DIV.26	N/A	N/A	NORMAL	114	1"	3#10 & 1#10G	5HP	9	POWER WIRING AND DISCONNECT BY EC
MAU 5-7	MAKEUP AIR UNIT	MAINTENANCE BUILDING	REVENUE OFFICES	7 1/2	480	3	60	12.1	15.1	20	30	20	DIV.26	N/A	N/A	NORMAL	115	3/4"	3#12 & 1#12G	5HP	10	POWER WIRING AND DISCONNECT BY EC
MAU 5-8	MAKEUP AIR UNIT	MAINTENANCE BUILDING	OFFICE	3	480	3	60	5.9	7.4	15	30	15	DIV.26	N/A	N/A	NORMAL	140	3/4"	3#12 & 1#12G	5HP	11	POWER WIRING AND DISCONNECT BY EC
MAU 5-9 (E)	MAKEUP AIR UNIT	MAINTENANCE BUILDING	PAINT BOOTH	-	480	3	60	-	-	-	-	-	DIV.26	N/A	N/A	NORMAL	-	-	-	5HJ	19	EXISTING TO REMAIN

REGISTERED PROFESSIONAL ENGINEER
PAUL K. ERIKSON
No. 11219
exp.06/30/2025
ELECTRICAL
STATE OF CALIFORNIA

05-13-2024

IFB 4-2550 EXHIBIT B

Stantec
801 S. Figueroa Street, Suite 300
Los Angeles, CA 90017

Copyright Reserved
The contractor shall verify and be responsible for all dimensions. DO NOT scale the drawing - any errors or omissions shall be reported to Stantec without delay.
This drawing is the property of Stantec and must not be reproduced or used for other purposes.

REVISION	DESCRIPTION	DATE
4	100% RESUBMITTAL	05/13/2024
3	100% CONSTRUCTION DRAWING SUBMITTAL	03/27/2024
2	90% UPDATED CONSTRUCTION SUBMITTAL	02/13/2024
1	90% CONSTRUCTION DRAWING SUBMITTAL	12/07/2023

REPLACEMENT OF MECHANICAL UNITS AT SANTA ANA BUS BASE
4301 W. MAC ARTHUR BLVD., SANTA ANA, CA

CONDUIT SCHEDULES

JOB #:
DESIGN BY: IZ
DRAWN BY: AD
CHECKED BY: PKE
DATE: 02/13/2024
SCALE:
SHEET: **E-800W**

OCTA
ORANGE COUNTY TRANSPORTATION AUTHORITY
550 SOUTH MAIN STREET, ORANGE, CA

Autodesk Docs://2014233703_Santa_Ana_Bus/elec_SantaAnaBus_2014233703.rvt

5/8/2024 9:59:52 AM

EQUIP TAG	DESCRIPTION	LOCATION	SERVICE	MOTOR POWER (OR) HP	ELECTRICAL DATA VOLTS	ø	HZ	FLA(A)	MCA(A)	MOCP(A)	DISCONNECT FRAME(A)	FUSE SIZE (A)	BY	STARTER TYPE	BY	EMERGENCY / NORMAL	CONDUIT REF #	CONDUIT	WIRE	PANEL	CIRCUIT	REMARK
EF 4-1	EXHAUST FAN	OPERATIONS BUILDING	OPER BLDG REST RM	1/4	120	1	60	2.9	4	15	-	-	DIV.26	N/A	N/A	NORMAL	-	3/4"	2#10 & 1#10G	4LC	2	MOTOR RATED SWITCH
EF 4-2	EXHAUST FAN	OPERATIONS BUILDING	OPER BLD MEN'S RM	1/4	120	1	60	3.5	4	15	-	-	DIV.26	N/A	N/A	NORMAL	-	3/4"	2#10 & 1#10G	4LC	4	MOTOR RATED SWITCH
EF 4-3	EXHAUST FAN	OPERATIONS BUILDING	OPER BLD ELEC RM 103	1/4	120	1	60	3.5	4	15	-	-	DIV.26	N/A	N/A	NORMAL	-	3/4"	2#10 & 1#10G	4LC	6	MOTOR RATED SWITCH
EF 4-4	EXHAUST FAN	OPERATIONS BUILDING	OPER BLDG LOCKER	1/10	120	1	60	1.5	2	15	-	-	DIV.26	N/A	N/A	NORMAL	-	3/4"	2#10 & 1#10G	4LC	8	MOTOR RATED SWITCH
EF 5-1	EXHAUST FAN	MAINTENANCE BUILDING	RUNNING REPAIR RM 181	25	480	3	60	34	42.5	70	100	70	DIV.26	2	DIV.23	NORMAL	141	1-1/4"	6#8 & 1#10G	MCC5A	2	POWER WIRING AND DISCONNECT BY EC
EF 5-2	EXHAUST FAN	MAINTENANCE BUILDING	RM 181	15	480	3	60	21	26.2	45	60	45	DIV.26	2	DIV.23	NORMAL	142	1"	6#10 & 1#10G	MCC5A	3	POWER WIRING AND DISCONNECT BY EC
EF 5-3	EXHAUST FAN	MAINTENANCE BUILDING	RM 178	15	480	3	60	21	26.2	45	60	45	DIV.26	2	DIV.23	NORMAL	143	1"	6#10 & 1#10G	MCC5A	4	POWER WIRING AND DISCONNECT BY EC
EF 5-4	EXHAUST FAN	MAINTENANCE BUILDING	RM 178	15	480	3	60	21	26.2	45	60	45	DIV.26	2	DIV.23	NORMAL	144	1"	6#10 & 1#10G	MCC5A	5	POWER WIRING AND DISCONNECT BY EC
EF 5-5	EXHAUST FAN	MAINTENANCE BUILDING	RM 178	15	480	3	60	21	26.2	45	60	45	DIV.26	2	DIV.23	NORMAL	145	1"	6#10 & 1#10G	MCC5A	6	POWER WIRING AND DISCONNECT BY EC
EF 5-6	EXHAUST FAN	MAINTENANCE BUILDING	STEAM CLEANER	5	480	3	60	7.6	9.5	15	30	15	DIV.26	1	DIV.23	NORMAL	146	3/4"	6#12 & 1#12G	MCC5A	7	POWER WIRING AND DISCONNECT BY EC
EF 5-7	EXHAUST FAN	MAINTENANCE BUILDING	PARTS RM 135	2	480	3	60	3.4	4.25	15	30	15	DIV.26	1	DIV.23	NORMAL	126	3/4"	3#12 & 1#12G	MCC5	26	POWER WIRING AND DISCONNECT BY EC
EF 5-8	EXHAUST FAN	MAINTENANCE BUILDING	PARTS RM 135	2	480	3	60	3.4	4.25	15	30	15	DIV.26	1	DIV.23	NORMAL	127	3/4"	3#12 & 1#12G	MCC5	27	POWER WIRING AND DISCONNECT BY EC
EF 5-9	EXHAUST FAN	MAINTENANCE BUILDING	PARTS RM 135	2	480	3	60	3.4	4.25	15	30	15	DIV.26	1	DIV.23	NORMAL	128	3/4"	3#12 & 1#12G	MCC5	28	POWER WIRING AND DISCONNECT BY EC
EF 5-10	EXHAUST FAN	MAINTENANCE BUILDING	PARTS RM 135	2	480	3	60	3.4	4.25	15	30	15	DIV.26	1	DIV.23	NORMAL	129	3/4"	3#12 & 1#12G	MCC5	29	POWER WIRING AND DISCONNECT BY EC
EF 5-11	EXHAUST FAN	MAINTENANCE BUILDING	JAN RM 219	1/15	120	1	60	1.3	2.00	15	-	-	DIV.26	N/A	N/A	NORMAL	-	3/4"	2#12 & 1#12G	5LP	32	MOTOR RATED SWITCH
EF 5-12 (E)	EXHAUST FAN	MAINTENANCE BUILDING	MEN'S RM 214, WOMEN 213	(E)	120	1	60	-	-	-	-	-	DIV.26	N/A	N/A	NORMAL	-	3/4"	2#12 & 1#12G	5LP	34	EXISTING TO REMAIN
EF 5-13	EXHAUST FAN	MAINTENANCE BUILDING	MEN'S RM 109	1/4	120	1	60	3.5	4	15	-	-	DIV.26	N/A	N/A	NORMAL	-	3/4"	2#12 & 1#12G	5LP	36	MOTOR RATED SWITCH
EF 5-14 (E)	EXHAUST FAN	MAINTENANCE BUILDING	WOMEN/SH RM 115	(E)	120	1	60	-	-	-	-	-	DIV.26	N/A	N/A	NORMAL	-	3/4"	2#12 & 1#12G	5LP	38	EXISTING TO REMAIN
EF 5-15 (E)	EXHAUST FAN	MAINTENANCE BUILDING	JAN RM 114	(E)	120	1	60	-	-	-	-	-	DIV.26	N/A	N/A	NORMAL	-	-	-	5LP	40	EXISTING TO REMAIN
EF 5-16	EXHAUST FAN	MAINTENANCE BUILDING	REBUILT RM 106	2	480	3	60	3.4	4.25	15	30	15	DIV.26	N/A	N/A	NORMAL	130	3/4"	3#12 & 1#12G	MCC5	30	POWER WIRING AND DISCONNECT BY EC
EF 5-17	EXHAUST FAN	MAINTENANCE BUILDING	REBUILT RM 107	2	480	3	60	3.4	4.25	15	30	15	DIV.26	1	DIV.23	NORMAL	131	3/4"	3#12 & 1#12G	MCC5	31	POWER WIRING AND DISCONNECT BY EC
EF 5-18	EXHAUST FAN	MAINTENANCE BUILDING	REBUILT RM 108	2	480	3	60	3.4	4.25	15	30	15	DIV.26	1	DIV.23	NORMAL	132	3/4"	3#12 & 1#12G	MCC5	32	POWER WIRING AND DISCONNECT BY EC
EF 5-19	EXHAUST FAN	MAINTENANCE BUILDING	BREAK RM 121	1 1/2	480	3	60	3	3.75	15	30	15	DIV.26	1	DIV.23	NORMAL	133	3/4"	3#12 & 1#12G	MCC5	33	POWER WIRING AND DISCONNECT BY EC
EF 5-20	EXHAUST FAN	MAINTENANCE BUILDING	CLEAN SHOP 141	1	480	3	60	2.1	2.63	15	30	15	DIV.26	1	DIV.23	NORMAL	134	3/4"	3#12 & 1#12G	MCC5	34	POWER WIRING AND DISCONNECT BY EC
EF 5-21	EXHAUST FAN	MAINTENANCE BUILDING	MACHINE RM 144	1	480	3	60	2.1	2.63	15	30	15	DIV.26	1	DIV.23	NORMAL	135	3/4"	3#12 & 1#12G	MCC5	35	POWER WIRING AND DISCONNECT BY EC
EF 5-22	EXHAUST FAN	MAINTENANCE BUILDING	MACHINE RM 145	1	480	3	60	2.1	2.63	15	30	15	DIV.26	1	DIV.23	NORMAL	136	3/4"	3#12 & 1#12G	MCC5	36	POWER WIRING AND DISCONNECT BY EC
EF 5-23 (E)	EXHAUST FAN	MAINTENANCE BUILDING	COMP REP RM 143	(E)	480	3	60	-	-	-	-	-	DIV.26	-	-	NORMAL	-	-	-	5LM	39	EXISTING TO REMAIN
EF 5-24	EXHAUST FAN	MAINTENANCE BUILDING	BLDG MAIN. RM 150	3/4	480	3	60	1.6	2	15	30	15	DIV.26	1	DIV.23	NORMAL	137	3/4"	3#12 & 1#12G	MCC5	37	POWER WIRING AND DISCONNECT BY EC
EF 5-25	EXHAUST FAN	MAINTENANCE BUILDING	COMP EXCH RM 148	7 1/2	480	3	60	11	13.8	20	30	20	DIV.26	1	DIV.23	NORMAL	147	3/4"	6#12 & 1#12G	MCC5A	8	POWER WIRING AND DISCONNECT BY EC
EF 5-26	EXHAUST FAN	MAINTENANCE BUILDING	REV. TOIL. RM 160/161	1/10	120	1	60	1.5	2	15	-	-	DIV.26	N/A	N/A	NORMAL	-	3/4"	2#12 & 1#12G	5LS	2	MOTOR RATED SWITCH
EF 5-27 (E)	EXHAUST FAN	MAINTENANCE BUILDING	LOCKER RM 167	(E)	120	1	60	-	-	-	-	-	DIV.26	-	-	NORMAL	-	-	-	5LS	4	EXISTING TO REMAIN
EF 5-28	EXHAUST FAN	MAINTENANCE BUILDING	BODY SHOP RM 174	20	480	3	60	27	33.8	60	60	50	DIV.26	2	DIV.23	NORMAL	148	1"	6#10 & 1#10G	MCC5A	9	POWER WIRING AND DISCONNECT BY EC
EF 5-29	EXHAUST FAN	MAINTENANCE BUILDING	STORAGE RM 155	3/4	480	3	60	1.6	2	15	30	15	DIV.26	1	DIV.23	NORMAL	138	3/4"	3#12 & 1#12G	MCC5	38	POWER WIRING AND DISCONNECT BY EC
EF 5-30 (E)	EXHAUST FAN	MAINTENANCE BUILDING	TEL RM 136	(E)	120	1	60	-	-	-	-	-	DIV.26	-	-	NORMAL	-	-	-	5LH	24	EXISTING TO REMAIN
EF 5-31	EXHAUST FAN	MAINTENANCE BUILDING	ELEC RM 137	2	480	3	60	3.2	4	15	30	15	DIV.26	N/A	N/A	NORMAL	-	3/4"	3#12 & 1#12G	5HE	20	POWER WIRING AND DISCONNECT BY EC
EF 5-32	EXHAUST FAN	MAINTENANCE BUILDING	LUBE RM 138	1/10	120	1	60	1.5	2	15	-	-	DIV.26	N/A	N/A	NORMAL	-	3/4"	2#10 & 1#10G	5LH	24	MOTOR RATED SWITCH
EF 5-33	EXHAUST FAN	MAINTENANCE BUILDING	C.A. RM 139	3	480	3	60	4.8	6	15	30	15	DIV.26	N/A	N/A	NORMAL	-	3/4"	3#12 & 1#12G	5HE	20	POWER WIRING AND DISCONNECT BY EC
EF 5-34	EXHAUST FAN	MAINTENANCE BUILDING	ELEC RM 185	2	480	3	60	3.2	4	15	30	15	DIV.26	N/A	N/A	NORMAL	-	3/4"	3#12 & 1#12G	5HA	28	POWER WIRING AND DISCONNECT BY EC
EF 5-35	EXHAUST FAN	MAINTENANCE BUILDING	ELEC RM 184	1/2	120	1	60	6.4	8	15	-	-	DIV.26	N/A	N/A	NORMAL	128	3/4"	3#12 & 1#12G	5LA	6	MOTOR RATED SWITCH
EF 5-36 (E)	EXHAUST FAN	MAINTENANCE BUILDING	ELEC RM 220	(E)	480	3	60	-	-	-	-	-	DIV.26	-	-	NORMAL	-	-	-	MCC5	10	EXISTING TO REMAIN
EF 5-37	EXHAUST FAN	MAINTENANCE BUILDING	ENG. DYN. RM 103	7 1/2	480	3	60	11	13.8	20	30	20	DIV.26	1	DIV.23	NORMAL	-	3/4"	3#12 & 1#12G	MCC5A	11	POWER WIRING AND DISCONNECT BY EC
EF 5-38	EXHAUST FAN	MAINTENANCE BUILDING	TRAN DYN. RM 105	1/4	120	1	60	3.5	4	15	-	-	DIV.26	N/A	N/A	NORMAL	-	3/4"	2#12 & 1#12G	5LN	10	MOTOR RATED SWITCH
EF 5-39	EXHAUST FAN	MAINTENANCE BUILDING	EQUIP. STOR. RM 129	1/6	120	1	60	2.3	3	15	-	-	DIV.26	N/A	N/A	NORMAL	-	3/4"	2#12 & 1#12G	5LD	6	MOTOR RATED SWITCH
EF 5-40	EXHAUST FAN	MAINTENANCE BUILDING	LOADING ABY RM 170	1/4	120	1	60	3.5	4	15	-	-	DIV.26	N/A	N/A	NORMAL	-	3/4"	2#12 & 1#12G	5LK	3	MOTOR RATED SWITCH
EF 5-41	EXHAUST FAN	MAINTENANCE BUILDING	UPHOLSTERY SHOP RM...	1/4	120	1	60	3.5	4	15	-	-	DIV.26	N/A	N/A	NORMAL	-	3/4"	2#12 & 1#12G	5LS	6	MOTOR RATED SWITCH
EF 5-42	EXHAUST FAN	MAINTENANCE BUILDING	FUEL RM 102	1/4	120	1	60		7.25	15	-	-	DIV.26	N/A	N/A	NORMAL	-	3/4"	2#12 & 1#12G	5LT	13	MOTOR RATED SWITCH
EF 5-43 (E)	EXHAUST FAN	MAINTENANCE BUILDING	PAINT BOOTH	(E)	-	-	-	-	-	-	-	-	DIV.26	-	-	NORMAL	-	-	-	5HJ	19	EXISTING TO REMAIN
EF 6-1	EXHAUST FAN	FUEL/BRAKE/TIRE REPAIR...	BRAKE/BST RM 114/001	20	480	3	60	27	33.8	50	60	50	DIV.26	2	DIV.23	NORMAL	171	1"	6#10 & 1#10G	MCC6	2	POWER WIRING AND DISCONNECT BY EC
EF 6-2	EXHAUST FAN	FUEL/BRAKE/TIRE REPAIR...	FUEL AREA RM 115	15	480	3	60	21	26.2	40	60	40	DIV.26	2	DIV.23	NORMAL	172	1"	6#10 & 1#10G	MCC6	3	POWER WIRING AND DISCONNECT BY EC
EF 6-3	EXHAUST FAN	FUEL/BRAKE/TIRE REPAIR...	BODY/SHOP 118/116	10	480	3	60	14	17.5	30	30	30	DIV.26	1	DIV.23	NORMAL	173	3/4"	6#12 & 1#12G	MCC6	4	POWER WIRING AND DISCONNECT BY EC
EF 6-4	EXHAUST FAN	FUEL/BRAKE/TIRE REPAIR...	MEN'S RM	1/15	120	1	60	1.3	2	15	-	-	DIV.26	N/A	N/A	NORMAL	-	3/4"	2#12 & 1#12G	6LB	1	MOTOR RATED SWITCH
EF 6-5 (E)	EXHAUST FAN	FUEL/BRAKE/TIRE REPAIR...	WOMEN'S RM	(E)	120	1	60	-	-	-	-	-	DIV.26	-	-	NORMAL	-	-	-	6LB	3	EXISTING TO REMAIN
EF 6-6	EXHAUST FAN	FUEL/BRAKE/TIRE REPAIR...	LOCKER/LAUNDRY	1/10	120	1	60	1.5	2	15	-	-	DIV.26	N/A	N/A	NORMAL	-	3/4"	2#12 & 1#12G	6LB	5	MOTOR RATED SWITCH
EF 6-7	EXHAUST FAN	FUEL/BRAKE/TIRE REPAIR...	C.A. 111/TEL. 112	3	480	3	60	4.8	6	15	30	15	DIV.26	N/A	N/A	NORMAL	-	3/4"	3#12 & 1#12G	MCC5	9	POWER WIRING AND DISCONNECT BY EC
EF 6-8	EXHAUST FAN	FUEL/BRAKE/TIRE REPAIR BUILDING	FLUID TANK 110/GREESE TANK 109	1/10	120	1	60	1.5	2	15	-	-	DIV.26	N/A	N/A	NORMAL	-	3/4"	2#12 & 1#12G	6LB	9	MOTOR RATED SWITCH
EF 6-9	EXHAUST FAN	FUEL/BRAKE/TIRE REPAIR...	FUEL RM 115	1/2	120	1	60	6.4	8	15	-	-	DIV.26	N/A	N/A	NORMAL	-	3/4"	2#12 & 1#12G	6LB	42	MOTOR RATED SWITCH
EF 7-1	EXHAUST FAN	BUS WASH/BRAKE DYNO BUILDING	BUS WASH	2	480	3	60	3.4	4.25	15	30	15	DIV.26	N/A	N/A	NORMAL	174	3/4"	3#12 & 1#12G	MCC6	5	POWER WIRING AND DISCONNECT BY EC
EF 7-2	EXHAUST FAN	BUS WASH/BRAKE DYNO BUILDING	BUS WASH	2	480	3	60	3.4	4.25	15	30	15	DIV.26	N/A	N/A	NORMAL	174	3/4"	3#12 & 1#12G	MCC6	5	POWER WIRING AND DISCONNECT BY EC
EF 8-1	EXHAUST FAN	DETAIL/CLEANING BUILDING	DETAILING/CLEANIN EQUIP. RM	1/4	120	1	60	2.9	4	15	-	-	DIV.26	N/A	N/A	NORMAL	-	3/4"	2#12 & 1#12G	8LA	24	MOTOR RATED SWITCH

IFB 4-2550 EXHIBIT B

Stantec
801 S. Figueroa Street, Suite 300
Los Angeles, CA 90017

Copyright Reserved
The contractor shall verify and be responsible for all dimensions. DO NOT scale the drawing - any errors or omissions shall be reported to Stantec without delay.
The copyrights to all designs and drawings are the property of Stantec. Reproduction or use for any purpose other than that authorized by Stantec is prohibited.

REVISION	DESCRIPTION	DATE
4	100% RESUBMITTAL	05/13/2024
3	100% CONSTRUCTION DRAWING SUBMITTAL	03/27/2024
2	90% UPDATED CONSTRUCTION SUBMITTAL	02/13/2024
1	90% CONSTRUCTION DRAWING SUBMITTAL	12/07/2023

REGISTERED PROFESSIONAL ENGINEER
PAUL K. ERICSSON
No. 11219
exp.06/30/2025
ELECTRICAL
STATE OF CALIFORNIA

05-13-2024

REPLACEMENT OF MECHANICAL UNITS AT SANTA ANA BUS BASE
4301 W. MAC ARTHUR BLVD., SANTA ANA, CA

CONDUIT SCHEDULES

JOB #:
DESIGN BY: IZ
DRAWN BY: ERL
CHECKED BY: PKE
DATE: 02/13/2024
SCALE:
SHEET: **E-801W**

OCTA
ORANGE COUNTY TRANSPORTATION AUTHORITY
550 SOUTH MAIN STREET, ORANGE, CA

Autodesk Docs://2014233703_Santa_Ana_Bus/elec_SantaAnaBus_2014233703.rvt
5/8/2024 9:59:53 AM

EQUIP TAG	DESCRIPTION	LOCATION	SERVICE	MOTOR POWER (OR) HP	ELECTRICAL DATA						DISCONNECT			STARTER		EMERGENCY / NORMAL	CONDUIT REF #	CONDUIT	WIRE	PANEL	CIRCUIT	REMARK
					VOLTS	ø	HZ	FLA(A)	MCA(A)	MOCP(A)	FRAME(A)	FUSE SIZE (A)	BY	TYPE	BY							
SF 4-1	SUPPLY FAN	OPERATIONS BUILDING	ELEC RM 103	1/4	120	1	60	5.8	7.25	20	-	-	DIV.26	1	DIV.23	NORMAL	-	3/4"	2#12 & 1#12G	4LC	38	MOTOR RATED SWITCH
SF 5-1	SUPPLY FAN	MAINTENANCE BUILDING	PARTS RM 135	3	480	3	60	4.8	6	15	30	15	DIV.26	1	DIV.23	NORMAL	116	3/4"	3#12 & 1#12G	MCC5	16	POWER WIRING AND DISCONNECT BY EC
SF 5-2	SUPPLY FAN	MAINTENANCE BUILDING	PARTS RM 135	3	480	3	60	4.8	6	15	30	15	DIV.26	1	DIV.23	NORMAL	117	3/4"	3#12 & 1#12G	MCC5	17	POWER WIRING AND DISCONNECT BY EC
SF 5-3	SUPPLY FAN	MAINTENANCE BUILDING	PARTS RM 135	3	480	3	60	4.8	6	15	30	15	DIV.26	1	DIV.23	NORMAL	118	3/4"	3#12 & 1#12G	MCC5	18	POWER WIRING AND DISCONNECT BY EC
SF 5-4	SUPPLY FAN	MAINTENANCE BUILDING	REBUILT RM 106	5	480	3	60	7.6	9.5	15	30	15	DIV.26	1	DIV.23	NORMAL	119	3/4"	3#12 & 1#12G	MCC5	19	POWER WIRING AND DISCONNECT BY EC
SF 5-5	SUPPLY FAN	MAINTENANCE BUILDING	BRAKE RM 121	1.5	480	3	60	3	3.75	15	30	15	DIV.26	1	DIV.23	NORMAL	120	3/4"	3#12 & 1#12G	MCC5	20	POWER WIRING AND DISCONNECT BY EC
SF 5-6	SUPPLY FAN	MAINTENANCE BUILDING	CLEAN SHOP RM 141	1	480	3	60	2.1	2.63	15	30	15	DIV.26	1	DIV.23	NORMAL	121	3/4"	3#12 & 1#12G	MCC5	21	POWER WIRING AND DISCONNECT BY EC
SF 5-7 (E)	SUPPLY FAN	MAINTENANCE BUILDING	MECH SHOP RM 144	(E)	480	3	60	-	-	-	-	-	DIV.26	-	-	NORMAL	122	3/4"	3#12 & 1#12G	MCC5	22	EXISTING TO REMAIN
SF 5-8	SUPPLY FAN	MAINTENANCE BUILDING	COMP. SHOP.RM143	3/4	480	3	60	1.6	2	15	30	15	DIV.26	1	DIV.23	NORMAL	123	3/4"	3#12 & 1#12G	MCC5	23	POWER WIRING AND DISCONNECT BY EC
SF 5-9	SUPPLY FAN	MAINTENANCE BUILDING	BLD MAINT.RM 150	2	480	3	60	3.4	4.25	15	30	15	DIV.26	1	DIV.23	NORMAL	124	3/4"	3#12 & 1#12G	MCC5	24	POWER WIRING AND DISCONNECT BY EC
SF 5-10	SUPPLY FAN	MAINTENANCE BUILDING	STORAGE RM 155	1	480	3	60	2.1	2.63	15	30	15	DIV.26	1	DIV.23	NORMAL	125	3/4"	3#12 & 1#12G	MCC5	25	POWER WIRING AND DISCONNECT BY EC
SF 5-11 (E)	SUPPLY FAN	MAINTENANCE BUILDING	ELEC RM 137	(E)	480	3	60	-	-	-	-	-	DIV.26	-	-	NORMAL	-	-	-	5HE	20	EXISTING TO REMAIN
SF 5-12	SUPPLY FAN	MAINTENANCE BUILDING	ELEC RM 185	1/2	480	3	60	1.1	1.38	15	30	15	DIV.26	1	DIV.23	NORMAL	-	3/4"	3#12 & 1#12G	5HA	28	POWER WIRING AND DISCONNECT BY EC
SF 5-13	SUPPLY FAN	MAINTENANCE BUILDING	ELEC RM 184	1/2	480	3	60	1.1	1.38	15	30	15	DIV.26	1	DIV.23	NORMAL	-	3/4"	3#12 & 1#12G	5HA	28	POWER WIRING AND DISCONNECT BY EC
SF 5-14	SUPPLY FAN	MAINTENANCE BUILDING	ELEC RM 220	1 1/2	480	3	60	3	3.75	15	30	15	DIV.26	1	DIV.23	NORMAL	-	3/4"	3#12 & 1#12G	MCC5	11	POWER WIRING AND DISCONNECT BY EC
SF 5-15	SUPPLY FAN	MAINTENANCE BUILDING	TRAIN DYN. RM105	1/2	480	3	60	1.1	1.38	15	30	15	DIV.26	1	DIV.23	NORMAL	-	3/4"	3#12 & 1#12G	MCC5	8	POWER WIRING AND DISCONNECT BY EC
SF 5-16	SUPPLY FAN	MAINTENANCE BUILDING	LOADING ABY RM 170	1/2	480	3	60	1.1	1.38	15	30	15	DIV.26	1	DIV.23	NORMAL	-	3/4"	3#12 & 1#12G	MCC5	7	POWER WIRING AND DISCONNECT BY EC
SF 6-1	SUPPLY FAN	FUEL/BRAKE/TIRE REPAIR...	TIRE BAY RM 116	5	480	3	60	7.6	9.5	15	30	15	DIV.26	1	DIV.23	NORMAL	170	3/4"	3#12 & 1#12G	MCC6	6	POWER WIRING AND DISCONNECT BY EC
SF 6-2	SUPPLY FAN	FUEL/BRAKE/TIRE REPAIR...	BASEMENT 001	5	480	3	60	3.4	4.25	15	30	15	DIV.26	1	DIV.23	NORMAL	169	3/4"	3#12 & 1#12G	MCC6	7	POWER WIRING AND DISCONNECT BY EC

REGISTERED PROFESSIONAL ENGINEER
PAUL K. ERICSON
No. 11219
exp.06/30/2025
ELECTRICAL
STATE OF CALIFORNIA

05-13-2024

IFB 4-2550 EXHIBIT B

Stantec
801 S. Figueroa Street, Suite 300
Los Angeles, CA 90017

Copyright Reserved
The contractor shall verify and be responsible for all dimensions. DO NOT scale the drawing - any errors or omissions shall be reported to Stantec without delay.
This drawing is the property of Stantec and shall not be reproduced in whole or in part. Reproduction or use for any purpose other than that authorized by Stantec is prohibited.

REVISION	DESCRIPTION	DATE
4	100% RESUBMITTAL	05/13/2024
3	100% CONSTRUCTION DRAWING SUBMITTAL	03/27/2024
2	90% UPDATED CONSTRUCTION SUBMITTAL	02/13/2024
1	90% CONSTRUCTION DRAWING SUBMITTAL	12/07/2023

REPLACEMENT OF MECHANICAL UNITS AT SANTA ANA BUS BASE
4301 W. MAC ARTHUR BLVD., SANTA ANA, CA

CONDUIT SCHEDULES

JOB #:
DESIGN BY: IZ
DRAWN BY: AD
CHECKED BY: PKE
DATE: 02/13/2024
SCALE:
SHEET: **E-802W**

OCTA
ORANGE COUNTY TRANSPORTATION AUTHORITY
550 SOUTH MAIN STREET, ORANGE, CA

Autodesk Docs://2014233703_Santa_Ana_Bus/elec_SantaAnaBus_2014233703.rvt
5/8/2024 9:59:53 AM

ORANGE COUNTY TRANSPORTATION AUTHORITY
REPLACEMENT OF MECHANICAL UNITS AT SANTA ANA BUS BASE - DETAIL CLEANING BUILDING

4301 W MacArthur Blvd, Santa Ana, CA 92704
CONTRACT NO. C-4-2550

SHEET INDEX

GENERAL
G-000D COVERSHEET
G-100D OVERALL SITE PLAN

MECHANICAL DEMO
MD-240D DETAIL/CLEANING BUILDING MECHANICAL DEMO ROOF PLAN

ELECTRICAL DEMO
ED-250D DETAIL/CLEANING BUILDING ELECTRICAL DEMO ROOF PLAN

STRUCTURAL
S-100D GENERAL NOTES
S-200D OVERALL PLAN
S-304D DETAIL/CLEANING BUILDING STRUCTURAL ROOF PLAN
S-600D ANCHORAGE SCHEDULES

ARCHITECTURAL
A-100D ARCHITECTURAL SITE PLAN
A-500D DETAILS

MECHANICAL
M-001D MECHANICAL GENERAL NOTES, SYMBOLS AND ANNOTATIONS
M-002D PROJECT NOTES AND SHEET INDEX
M-003D FAN SCHEDULE
M-004D ROOFTOP AND MAKE UP AIR SCHEDULES
M-005D HEAT PUMP AND AIR CONDITIONER SCHEDULES
M-006D MECHANICAL DETAILS
M-007D MECHANICAL DETAILS
M-008D MECHANICAL CONTROLS
M-009D MECHANICAL CONTROLS
M-240D DETAIL/CLEANING BUILDING MECHANICAL ROOF PLAN
M-300D TITLE 24 CODE COMPLIANCE
M-301D TITLE 24 CODE COMPLIANCE

ELECTRICAL
E-001D SYMBOLS, NOTES AND ANNOTATIONS
E-002D SCHEMATIC SYMBOLS AND ELECTRICAL DRAWING INDEX
E-250D DETAIL-CLEANING BUILDING ELECTRICAL ROOF PLAN
E-500D ELECTRICAL DETAILS
E-600D ELECTRICAL SINGLE LINE DIAGRAM
E-601D ELECTRICAL SINGLE LINE DIAGRAM
E-700D PANEL SCHEDULES
E-701D PANEL SCHEDULES
E-702D PANEL SCHEDULES
E-703D PANEL SCHEDULES
E-704D PANEL SCHEDULES
E-800D CONDUIT SCHEDULES
E-801D CONDUIT SCHEDULES
E-802D CONDUIT SCHEDULES

GENERAL INFORMATION

APPLICABLE CODES:
2022 CALIFORNIA MECHANICAL CODE
2022 CALIFORNIA PLUMBING CODE
2022 NATIONAL ELECTRICAL CODE
2022 TITLE 24 REQUIREMENTS
CALGREEN STANDARDS

ABBREVIATIONS

(E)	EXISTING
AB	ANCHOR BOLT
AC	AIR CONDITIONING
ACT	ACOUSTICAL TILE
ADJ	ADJACENT/ADJUSTABLE
AFF	ABOVE FINISH FLOOR
AFG	ABOVE FINISH GRADE
AHU	AIR HANDLING UNIT
ALT	ALTERNATE NO.
ALUM	ALUMINUM
ANOD	ANODIZED
ANSI	AMERICAN NATIONAL STANDARDS INSTITUTE
APPD	APPROVED
APPROX	APPROXIMATELY
ARCH	ARCHITECT
AVG	AVERAGE
BD	BOARD
BLDG	BUILDING
BLKG	BLOCKING
BM	BEAM/BENCH MARK
BOS	BOTTOM OF STEEL
BOT	BOTTOM
BUR	BUILT UP ROOFING
CEM	CEMENT
CF	CUBIC FOOT / FEET
CF/CI	CONTRACTOR FURNISHED/CONTRACTOR INSTALLED
CF/OI	CONTRACTOR FURNISHED/OWNER INSTALLED
CIP	CAST IN PLACE
CJ	CONTROL JOINT / CONTRACTION JOINT
CL	CENTERLINE
CLG	CEILING
CLR	CLEAR
CMU	CONCRETE MASONRY UNIT
CO	CLEAN OUT
COL	COLUMN
CONC	CONCRETE
COND	CONDITION
CONST	CONSTRUCTION
CONT	CONTINUE / CONTINUATION / CONTINUOUS
COORD	COORDINATE
CPT	CARPET
CT	CERAMIC TILE
CTR	CENTER
CU FT	CUBIC FOOT / CUBIC FEET
CU YD	CUBIC YARDS
CW	COLD WATER
D	DEPTH / DEEP
DBL	DOUBLE
DEG	DEGREE
DEL	DELETE
DEMO	DEMOLITION
DIA	DIAMETER
DIAG	DIAGONAL
DIM	DIMENSION
DISP	DISPENSER
DN	DOWN
DR	DOOR / DRAIN
DTL	DETAIL
DWG	DRAWING
E	EAST
EA	EACH
EF	EXHAUST FAN
EJ	EXPANSION JOINT
EL	REFERENCE ELEVATION / EASEMENT LINE
ELEC	ELECTRIC / ELECTRICAL
ELEV	ELEVATOR / ELEVATION
EMER	EMERGENCY
ENGR	ENGINEER / ENGINEERING
EOS	EDGE OF SLAB
EPDM	ETHYLENE PROPYLENE DIENE MONOMOR
EQ	EQUAL
EQUIP	EQUIPMENT
EST	ESTIMATE
ETC	ET CETERA
EW	EACH WAY
EXP	EXPOSED / EXPAND / EXPANSION
FA	FIRE ALARM / FACE AREA / FRESH AREA
FACP	FIRE ALARM CONTROL PANEL
FD	FLOOR DRAIN
FDTN	FOUNDATION
FE	FIRE EXTINGUISHER
FEC	FIRE EXTINGUISHER CABINET
FH	FIRE HYDRANT / FIRE HOSE
FHC	FIRE HOSE CABINET
FIN	FINISH
FIXT	FIXTURE
FL	FLOW LINE / FLOOR LINE
FLR	FLOOR / FLOORING
FR	FRAME / FIRE RATED / FIRE RETARTANT
FT	FOOT / FEET / FIRE TREATED / FULLY TEMPERED

ABBREVIATIONS

FTG	FOOTING
FURN	FURNISH / FURNITURE
GA	GAGE
GAL	GALLONS
GALV	GALVANIZED
GC	GENERAL CONTRACTOR
GEN	GENERAL / GENERATOR
GL	GLASS / GROUND LEVEL
GLZ	GLAZING
GND	GROUND
GYP BD	GYPSUM BOARD
HC	HANDICAPPED ACCESSIBLE / HOLLOW CORE
HD	HEAD / HEAVY DUTY
HDW	HARDWARE
HM	HOLLOW METAL
HORIZ	HORIZONTAL
HT	HEIGHT
HVAC	HEATING VENTILATION AND AIR CONDITIONING
HW	HOT WATER
ID	INSIDE DIAMETER / INTERIOR DESIGN
IF	INSIDE FACE / INTAKE FAN
IN	INCHES
INCL	INCLUDING
INSTL	INSTALL
INSUL	INSULATE / INSULATION
INT	INTERIOR / INTERNAL
INV	INVERT
INV EL	INVERT ELEVATION
J BOX	JUNCTION BOX
JT	JOINT
LAM	LAMINATE
LAV	LAVATORY
LBS	POUNDS
LF	LINEAR FEET
LH	LEFT HAND
LTG	LIGHTING
MAINT	MAINTENANCE
MATL	MATERIAL
MAX	MAXIMUM
MECH	MECHANICAL
MED	MEDIUM
MEMB	MEMBRANE
MFG	MANUFACTURING
MFR	MANUFACTURER
MIN	MINIMUM
MISC	MISCELLANEOUS
MTL	METAL
N	NORTH
N/A	NOT APPLICABLE
NEG	NEGATIVE
NIC	NOT IN CONTRACT
NO	NUMBER
NOM	NOMINAL
NTS	NOT TO SCALE
OC	ON CENTER
OD	OUTSIDE DIAMETER / OUTSIDE DIMENSION
OF/CI	OWNER FURNISHED/CONTRACTOR INSTALLED
OF/OI	OWNER FURNISHED/OWNER INSTALLED
OH	OPPOSITE HAND / OVERHEAD / OVERHANG
OPP	OPPOSITE
ORIG	ORIGINAL
PAT	PATTERN
PCC	PRECAST CONCRETE
PERF	PERFORATED
PERM	PERMANENT
PL	PLATE / PROPERTY LINE
PLAM	PLASTIC LAMINATE
PLAS	PLASTER / PLASTIC
PLBG	PLUMBING
PLYWD	PLYWOOD
PNL	PANEL
PREFAB	PREFABRICATED
PREFIN	PREFINISHED
PRELIM	PRELIMINARY
PREP	PREPARATION
PROJ	PROJECT
PT	PAINT / PRESSURE TREATED
PVC	POLYVINYL CHLORIDE
QTY	QUANTITY
R	RADIUS / RISER
RA	RETURN AIR
RCP	REFLECTED CEILING PLAN
RD	ROOF DRAIN
REBAR	REINFORCED STEEL BAR
REF	REFERENCE / REFRIGERATOR
REINF	REINFORCED / REINFORCEMENT
REQD	REQUIRED
REV	REVISION
RH	RIGHT HAND
RM	ROOM

ABBREVIATIONS

RO	ROUGH OPENING
ROW	RIGHT OF WAY
RTU	ROOF TOP UNIT
S	SOUTH
SALV	SALVAGE
SAN	SANITARY
SCHED	SCHEDULE / SCHEDULED
SEC	SECOND
SECT	SECTION
SF	SQUARE FOOT / SQUARE FEET / SUPPLY FAN
SGL	SINGLE
SIM	SIMILAR
SM	SHEET METAL / SMALL / SURFACE MOUNTED
SPEC	SPECIFICATION(S)
SPLY	SUPPLY
SQ	SQUARE
SST	STAINLESS STEEL
STC	SOUND TRANSMISSION CLASS
STD	STANDARD
STL	STEEL
STL JST	STEEL JOIST
STOR	STORAGE
STRUCT	STRUCTURAL
SURF	SURFACE
SUSP	SUSPENDED
SYMM	SYMMETRICAL
T	TREAD
T&B	TOP AND BOTTOM
TBD	TO BE DETERMINED
TEL	TELEPHONE
TEMP	TEMPERATURE / TEMPORARY
THK	THICK / THICKNESS
THRES	THRESHOLD
THRU	THROUGH
TO	TOP OF ____
TOC	TOP OF CONCRETE / TOP OF CURB
TOJ	TOP OF JOIST
TOM	TOP OF MASONRY
TOP	TOP OF PARAPET / TOP OF PAVEMENT
TOS	TOP OF STEEL / TOP OF SLAB
TOW	TOP OF WALL
TS	TUBE STEEL
TYP	TYPICAL
UBC	UNIFORM BUILDING CODE
UC	UNDERCUT
UL	UNDERWRITER'S LABORATORIES
UNFIN	UNFINISHED
UNO	UNLESS NOTED OTHERWISE
UTIL	UTILITY
VAR	VARIES
VCT	VINYL COMPOSITION TILE
VERT	VERTICAL
VIF	VERIFY IN FIELD
W	WEST / WIDTH / WIDE
W/	WITH
W/O	WITHOUT
WC	WATER CLOSET / WALL COVERING
WD	WOOD / WOOD DOOR
WF	WIDE FLANGE
WT	WEIGHT
YD	YARD / YARDS

PROJECT LOCATION

VICINITY MAP

GENERAL NOTES

1 DO NOT SCALE DRAWINGS.
2 ITEMS INDICATED ON THESE DRAWINGS ARE NEW, UNLESS NOTED OTHERWISE.
3 CONTRACTOR TO PROVIDE ROOFTOP SUPPORT SYSTEMS PER SPECIFICATIONS FOR ALL PIPING, CONDUITS, AND ALL OTHER ITEMS NOT OTHERWISE DIRECTLY OR INDIRECTLY ATTACHED TO THE BUILDINGS, PROVIDE SYSTEMS AS REQUIRED TO ACCOMMODATE EXISTING PIPING, CONDUITS, ETC. AND ANY NEW PIPING, CONDUITS, ETC.
4 CONTRACTOR TO PROTECT IN PLACE ALL PORTIONS OF THE BUILDINGS NOT IN SCOPE OR NOT INTENDED TO BE DEMOLISHED OR OTHERWISE PATCHED AND REPAIRED.
5 THE FOLLOWING GENERAL NOTES APPLY TO THE ENTIRE SET OF DRAWINGS AND ARE NOT SPECIFIC TO ANY ONE DISCIPLINE
6 IT IS THE CONTRACTORS RESPONSIBILITY TO REVIEW AND COORDINATE THE WORK OF ALL SUB-CONTRACTORS, TRADES AND SUPPLIERS WITH REQUIREMENTS OF THE CONTRACT BEFORE COMMENCING CONSTRUCTION, AND ASSURE THAT ALL PARTIES ARE AWARE OF ALL REQUIREMENTS, REGARDLESS OF WHERE THE REQUIREMENTS OCCUR IN THE CONTRACT DOCUMENTS, WHICH MIGHT AFFECT THE WORK OF THAT PARTY.
7 THE WORK DESCRIBED BY THE DRAWINGS OF ANY ONE DISCIPLINE MAY BE AFFECTED BY THE WORK DESCRIBED ON DRAWINGS OF ANOTHER DISCIPLINE AND MAY REQUIRE CROSS REFERENCE. PARTIAL SETS OF DRAWINGS ARE INCOMPLETE AND SHOULD NOT BE DISTRIBUTED OR UTILIZED BY THE CONTRACTOR.
8 THE DRAWINGS AND SPECIFICATIONS ESTABLISH MINIMUM REQUIREMENTS FOR THE DESIGN AND CONSTRUCTION OF THE PROJECT.
9 ARCHITECT IS NOT RESPONSIBLE FOR ACCURACY OF EXISTING CONDITIONS SHOWN IN THESE DOCUMENTS. GC SHALL CONTACT ARCHITECT IMMEDIATELY IF ANY DISCREPANCIES OCCUR IN THE FIELD.
10 THE DRAWINGS IN THIS SET ARE DIAGRAMMATIC AND ILLUSTRATE THE INTENT OF THE DESIGN.
11 THE CONTRACTOR SHALL IDENTIFY AND NOTIFY IN WRITING TO THE ARCHITECT CONFLICTS BETWEEN THE WORK OF DIFFERENT PARTIES, AND DISCREPANCIES BETWEEN THE DOCUMENTS AND THE ACTUAL CONDITIONS AT THE EARLIEST POSSIBLE DATE SO AS TO ALLOW REASONABLE AND ADEQUATE TIME FOR THE CONFLICT TO BE RESOLVED WITHOUT DELAYING THE WORK. ALL DEVIATIONS FROM THAT WHICH IS REQUIRED BY THE CONTRACT DOCUMENTS MUST BE APPROVED IN ADVANCE BY THE ARCHITECT AND OWNER PRIOR TO PROCEEDING.
12 THE GENERAL NOTES, SYMBOLS AND DEFINITIONS APPLICABLE TO EACH DISCIPLINE CAN BE FOUND AT THE FRONT OF EACH DISCIPLINE'S SET OF DRAWINGS AND IS LISTED AS PART OF THE OVERALL PROJECT INDEX OF DRAWINGS.
13 THE CONTRACTOR IS RESPONSIBLE TO COMPLY WITH ALL APPLICABLE LAWS, CODES, REGULATIONS AND ORDINANCES OF THE PLACE (CITY, COUNTY, DISTRICT, AND STATE) WHERE THE PROJECT IS LOCATED.
14 THE CONTRACTOR SHALL OBTAIN ALL REQUIRED PERMITS (IF REQUIRED) AND SIMILAR RELEASES REQUIRED FOR THE CONSTRUCTION AND OCCUPANCY OF THE PROJECT. THE CONTRACTOR SHALL FURNISH COPIES OF ALL SUCH ITEMS TO THE OWNER AND ARCHITECT WITHIN 10 DAYS OF RECEIPT OF SUCH ITEMS. IF PERMITS ARE ISSUED SUBJECT TO CERTAIN CONDITIONS OR REVISIONS TO THE WORK OR IF PERMITS ARE DELAYED FOR ANY REASON, THE CONTRACTOR SHALL IMMEDIATELY NOTIFY THE OWNER AND ARCHITECT.
15 THE CONTRACTOR SHALL BE SOLELY RESPONSIBLE FOR MEANS, METHODS AND SEQUENCES OF CONSTRUCTION.
16 THE CONTRACTOR SHALL PROMPTLY REMOVE AND PROPERLY DISPOSE OF ALL CONSTRUCTION AND DEMOLITION DEBRIS. THE CONTRACTOR SHALL OBTAIN APPROVAL OF OWNER FOR DETAILS RELATED TO ALL SITE ACCESS AND REMOVAL PLANS
17 CONTRACTOR NOT TO STORE NEW OR REMOVED MECHANICAL UNITS ON BUILDING ROOFTOPS
18 THE CONTRACTOR SHALL BECOME FAMILIAR WITH AND COMPLY WITH OWNER'S PROCEDURES FOR MAINTAINING A SECURE SITE AND BUILDING AS NOTED IN THE OCTA DIVISION 1 SPECIFICATIONS.
19 EACH INSTALLER SHALL EXAMINE THE SUBSTRATE CONDITION AND/OR SITE CONDITIONS WHICH AFFECT THE QUALITY OF EACH PRODUCT TO BE INSTALLED. IF ANY CONDITIONS EXIST WHICH WILL HAVE A DETRIMENTAL EFFECT ON THE QUALITY OF THE INSTALLATION, THE INSTALLER SHALL IMMEDIATELY ADVISE THE CONTRACTOR. INSTALLATION SHALL NOT PROCEED UNTIL THE UNSATISFACTORY CONDITIONS ARE CORRECTED. INSTALLATION OF PRODUCTS SHALL SIGNIFY ACCEPTANCE BY THE INSTALLER OF THE SUBSTRATE CONDITIONS.
20 THE CONTRACTOR SHALL MAINTAIN A CURRENT/UPDATED RECORD OF DRAWINGS ON SITE AT ALL TIMES.
21 CONTRACTOR SHALL PROVIDE TEMPORARY HVAC UNITS WHILE THE PERMANENT MECHANICAL SYSTEMS ARE BEING REPLACED.
22 GC NOT TO PLACE CRANE OVER UNDERGROUND STORAGE TANKS.
23 CONTRACTOR TO COORDINATE WITH OCTA FACILITIES MAINTENANCE, SUBMITTING A LAYDOWN PLAN WITH CRANE LOCATIONS PER THE HSE SPECIFICATION DOCUMENTS. CONTRACTOR TO SUBMIT A CRANE PLAN FOR OCTA HSE DEPARTMENT TO REVIEW AND CERTIFY.
24 PATCH AND REPAIR EXISTING BUILT UP ROOFING SYSTEM AS NEEDED PER MFR REQUIREMENTS WITH A MINIMUM OVERLAP OF 48". SEE ALSO SPEC 07 52 16.
25 CONSTRUCTION SEQUENCE: THE WORK SHALL BE PERFORMED IN TWO PHASES, THE DEMOLITION PHASE, AND THE NEW CONSTRUCTION PHASE. ALL CRANE WORK FOR THE DEMOLITION PHASE INCLUDING REMOVAL OF EXISTING HVAC UNITS SHALL BE COMPLETED ON A NORMAL WORKDAY BETWEEN 7:00AM AND 4:00PM. ALL CRANE WORK FOR THE NEW CONSTRUCTION PHASE INCUDING SETTING THE NEW HVAC SHALL BE COMPLETED ON A SUBSEQUENT NORMAL WORK DAY BETWEEN 7:00AM AND 4:00PM.
26 ALL REMOVED DEMOLISHED EQUIPMENT SHALL BE LEGALLY DISPOSED OFF THE SITE THE SAME DAY OF REMOVAL AT CONTRACTOR'S EXPENSE.
27 CONTRACTOR TO PROVIDE TEMPORARY HVAC UNITS FOR BUILDINGS WHILE THE PERMENANT HVAC FOR THAT BUILDING IS BEING WORKED ON

LICENSED ARCHITECT
PATRICK MARTIN MCKELVY
No. C21617
REN. 5/31/2025
STATE OF CALIFORNIA

GRAPHIC SYMBOLS LEGEND

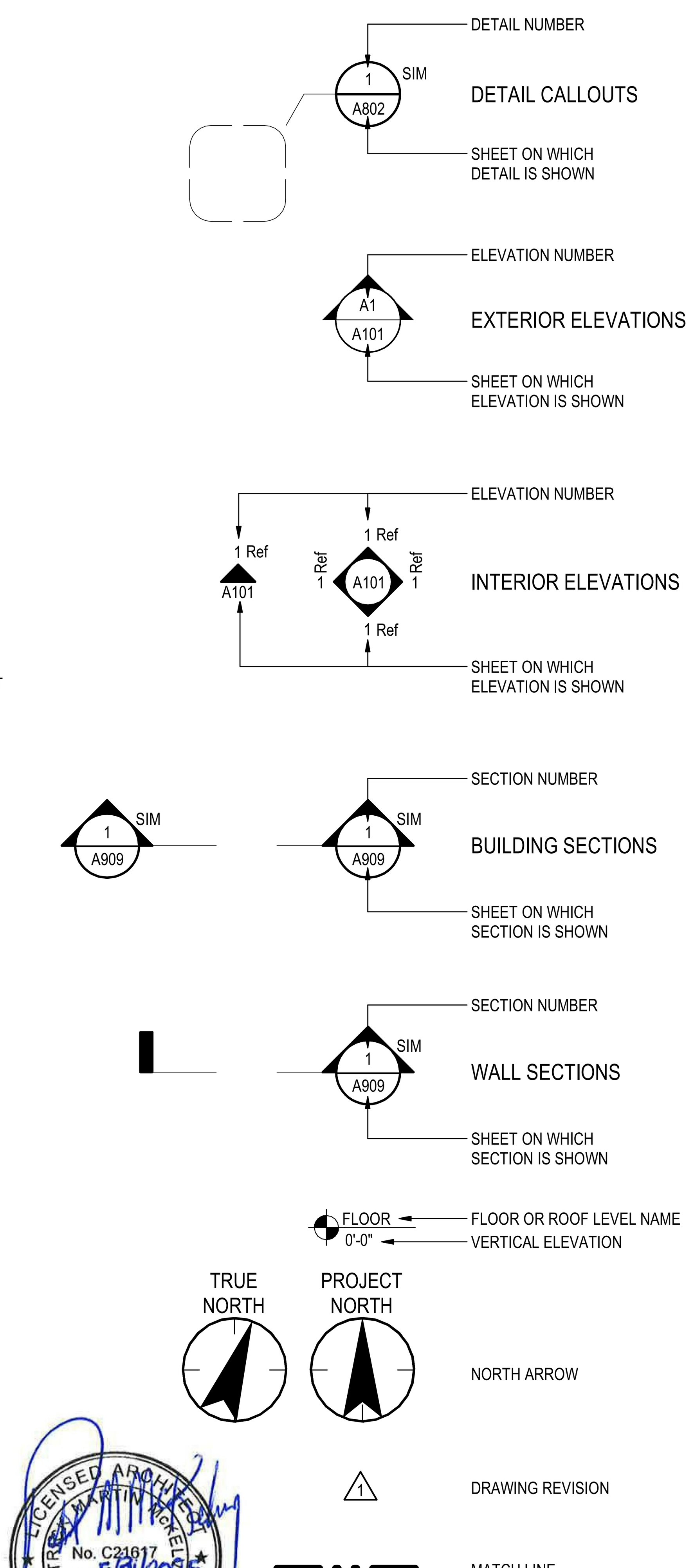

IFB 4-2550 EXHIBIT B

Stantec
801 S. Figueroa Street, Suite 300
Los Angeles, CA 90017

Copyright Reserved
The Contractor shall verify and be responsible for all dimensions. DO NOT scale the drawing - any errors or omissions shall be reported to Stantec without delay.
The Copyrights to all designs and drawings are the property of Stantec. Reproduction or use for any purpose other than that authorized by Stantec is forbidden.

REVISION	DESCRIPTION	DATE
5	100% RESUBMITTAL 2	08/19/2024
	100% RESUBMITTAL	5/13/2024
3	100% CONSTRUCTION DRAWING SUBMITTAL	03/18/2024
2	90% UPDATED CONSTRUCTION SUBMITTAL	02/13/2024
1	90% CONSTRUCTION DRAWING SUBMITTAL	12/07/2023

REPLACEMENT OF MECHANICAL UNITS AT SANTA ANA BUS BASE
4301 W MacArthur Blvd, Santa Ana, CA 92704

COVERSHEET

JOB #:	
DESIGN BY:	Designer
DRAWN BY:	Author
CHECKED BY:	Checker
DATE:	
SCALE:	12" = 1'-0"
SHEET:	G-000D

OCTA
ORANGE COUNTY TRANSPORTATION AUTHORITY
550 SOUTH MAIN STREET, ORANGE, CA

Autodesk Docs://2014233703_Santa_Ana_Bus/arch_2014233703-Revit22.rvt

5/9/2024 10:14:27 AM

IFB 4-2550 EXHIBIT B

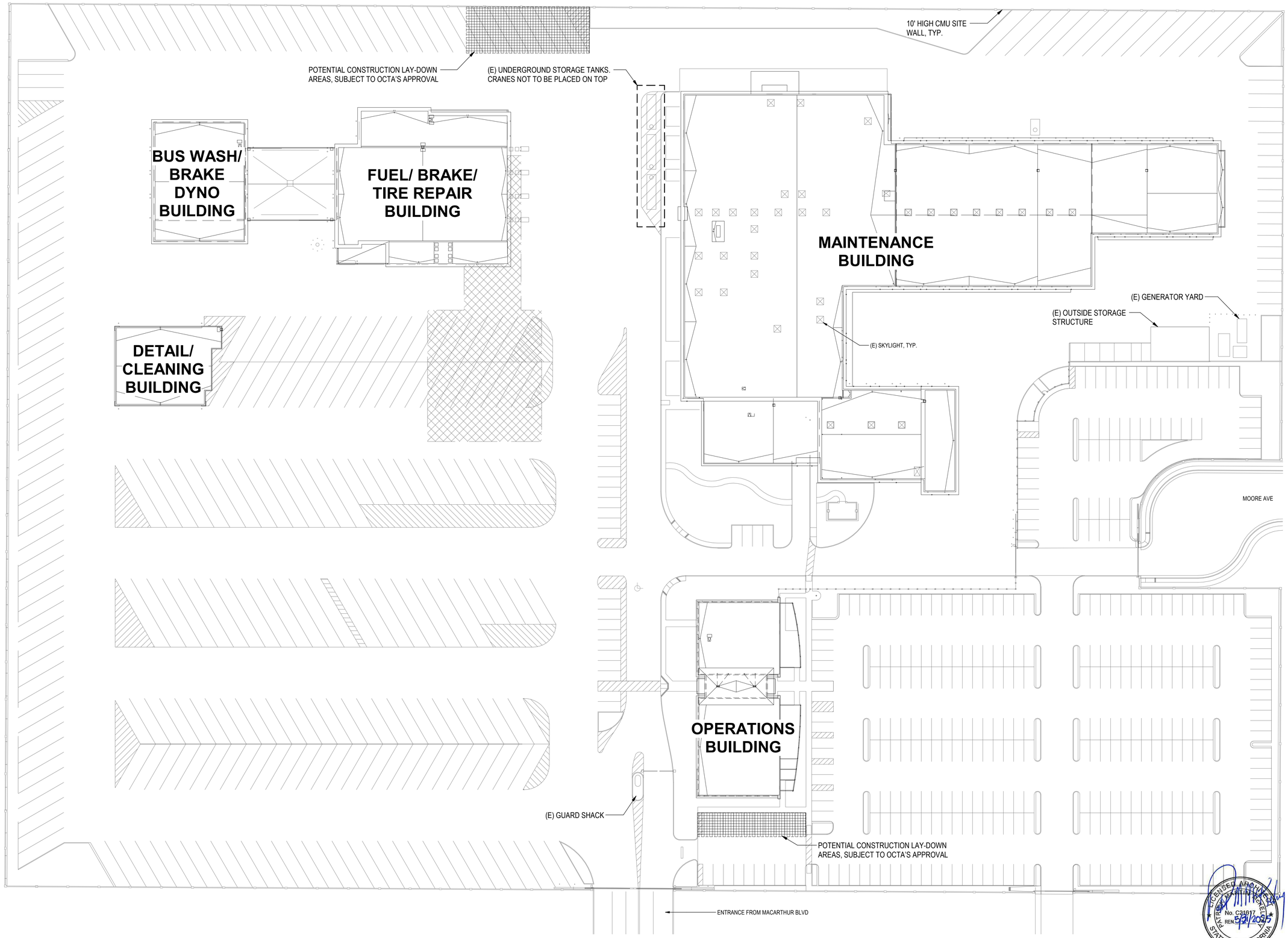

Stantec

801 S. Figueroa Street, Suite 300
Los Angeles, CA 90017

Copyright Reserved
The Contractor shall verify and be responsible for all dimensions. DO NOT scale the drawing - any errors or omissions shall be reported to Stantec without delay.
The Copyright in all designs and drawings are the property of Stantec. Reproduction or use for any purpose other than that authorized by Stantec is forbidden.

REVISION	DESCRIPTION	DATE
	100% RESUBMITTAL	5/13/2024
3	100% CONSTRUCTION DRAWING SUBMITTAL	03/18/2024
2	90% UPDATED CONSTRUCTION SUBMITTAL	02/13/2024
1	90% CONSTRUCTION DRAWING SUBMITTAL	12/07/2023

REPLACEMENT OF MECHANICAL UNITS AT SANTA ANA BUS BASE
4301 W MacArthur Blvd, Santa Ana, CA 92704

OVERALL SITE PLAN

JOB #:	
DESIGN BY:	Designer
DRAWN BY:	Author
CHECKED BY:	Checker
DATE:	
SCALE:	1" = 40'-0"
SHEET:	G-100D

OCTA
ORANGE COUNTY TRANSPORTATION AUTHORITY
550 SOUTH MAIN STREET, ORANGE, CA

LICENSED ARCHITECT
PATRICK MARTIN HACKELEY
No. C21617
REN. 5/31/2025
STATE OF CALIFORNIA

Autodesk Docs://2014233703_Santa_Ana_Bus/arch_2014233703-Revit22.rvt

5/9/2024 10:14:27 AM

IFB 4-2550 EXHIBIT B

GENERAL NOTES

1. FOR ALL THE EXISTING EQUIPMENT NOTED TO BE RETAINED AND REUSED:
   BEFORE DEMOLITION COMMENCES ON SITE, THE CONTRACTOR SHALL SURVEY AND ESTABLISH CONDITION AND CAPACITIES. ANY DAMAGE OR DEFICIENCY TO EXISTING EQUIPMENT DISCOVERED BY THE CONTRACTOR SHALL BE RECORDED AT THIS STAGE BY THE CONTRACTOR AND A FULL WRITTEN REPORT SUBMITTED TO THE OWNERS REPRESENTATIVE FOR REVIEW. THE REPORT WILL INCLUDE PHOTOGRAPHIC EVIDENCE OF DAMAGE.
2. ALL POWER SUPPLIES TO EXISTING EQUIPMENT TO BE REMOVED SHALL BE ISOLATED AND MADE SAFE PER NEC PRIOR TO DEMOLITION STARTS.
3. THE PIPEWORK AND ASSOCIATED EQUIPMENT TO BE DEMOLISHED SHALL BE REMOVED FROM SITE.
4. ALL EQUIPMENT TO BE REUSED SHALL BE CAREFULLY REMOVED PRIOR TO DEMOLITON, AND STORED IN A PROTECTED AREA ON SITE READY FOR LATER RE-INSTALLATION. EQUIPMENT TO REMAIN IN PLACE SHALL BE WELL PROTECTED FROM DAMAGE OR DUST.,
5. NO EQUIPMENT SHALL BE STORED ON THE ROOF.
6. ANY DAMAGE TO EXISTING EQUIPMENT DURING DEMOLITION SHALL BE THE RESPONSIBILITY OF THE CONTRACTOR.
7. ALL PIPEWORK/VALVES IS TO BE REINSULATED TO COMPLY WITH THE SPECIFICATION REQUIREMENTS.
8. CONTRACTOR SHALL REMOVE CONSTRUCTION DEBRIS AND VACUUM CLEAN ALL RETAINED EQUIPMENT (INTERNAL AND EXTERNAL)- PRIOR TO TEST AND BALANCE.

DEMO WORK DEFINITION

——— EXISTING (E)

- - - - - - REMOVE EXISTING (D)

⟨###⟩ KEY NOTE

Keynote Legend

Key Value	Keynote Text
D.01	EXISTING MECHANICAL EQUIPMENT TO REMAIN.
D.03	EXISTING EXHAUST FAN TO BE DEMOLISHED.

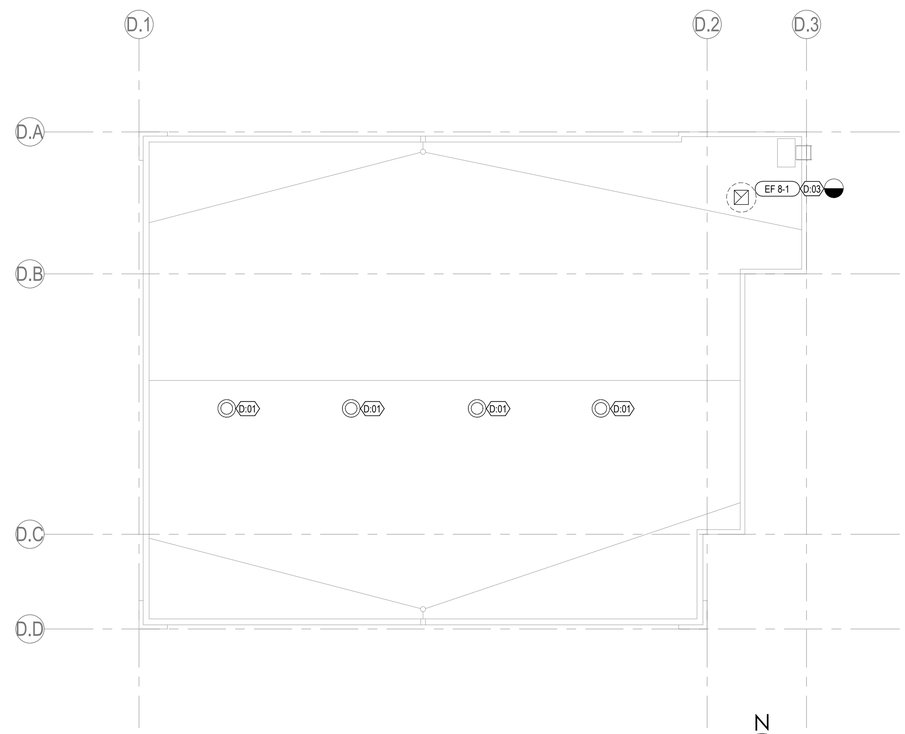

1 / MD-240 **DETAIL/CLEANING BUILDING MECHANICAL DEMO ROOF PLAN**

3/32" = 1'-0"

N

LICENSED PROFESSIONAL ENGINEER
SIYAR GALSTYAN
M-39730
EXP. 12/31/25
MECHANICAL
STATE OF CALIFORNIA

Stantec

801 S. Figueroa Street, Suite 300
Los Angeles, CA 90017

Copyright Reserved
The Contractor shall verify and be responsible for all dimensions. DO NOT scale the drawing - any errors or omissions shall be reported to Stantec without delay.
This drawing is the property of Stantec and shall not be reproduced in whole or in part. Reproduction or use for any purpose other than that authorized by Stantec is forbidden.

REVISION	DESCRIPTION	DATE
	100% RESUBMITTAL	5/13/2024
	100% CONSTRUCTION DRAWING SUBMITTAL	3/27/2024
	90% UPDATED CONSTRUCTION SUBMITTAL	2/13/2024
	90% CONSTRUCTION DRAWING SUBMITTAL	12/07/2023

REPLACEMENT OF MECHANICAL UNITS AT SANTA ANA BUS BASE

4301 W. MAC ARTHUR BLVD., SANTA ANA, CA

DETAIL/CLEANING BUILDING MECHANICAL DEMO ROOF PLAN

JOB #:	
DESIGN BY:	SG
DRAWN BY:	RW
CHECKED BY:	GY
DATE:	
SCALE:	As indicated
SHEET:	MD-240D

OCTA

ORANGE COUNTY TRANSPORTATION AUTHORITY
550 SOUTH MAIN STREET, ORANGE, CA

Autodesk Docs://2014233703_Santa_Ana_Bus/mech_SantaAnaBus_2014233703.rvt

5/8/2024 11:15:09 AM

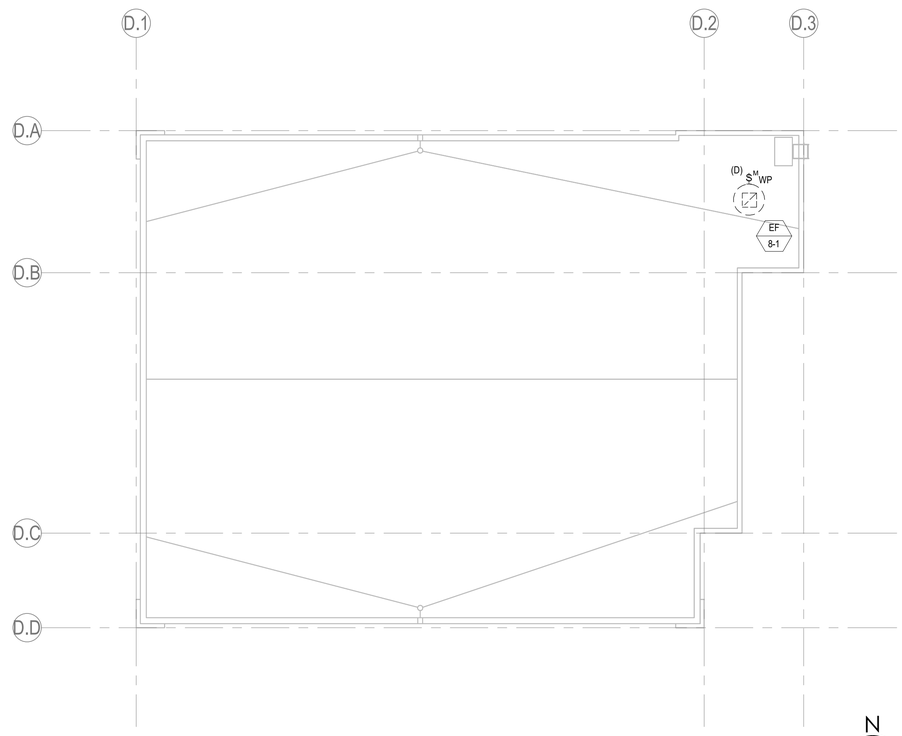

1 ED-250 **DETAIL/CLEANING BUILDING ELECTRICAL DEMO ROOF PLAN**
3/32" = 1'-0"

N

GENERAL NOTES

1. DISCONNECT EXISTING, TO BE REPLACED, MECHANICAL UNITS POWER CONNECTION FROM EXISTING ELECTRICAL PANELS, MOTOR CONTROL CENTERS, DISTRIBUTION PANELS. REMOVE EXISTING DISCONNECT SWITCHES AND EXISTING WIRES USED FOR POWER CONNECTION TO THE EXISTING MECHANICAL UNITS, SALVAGE AND RETURN TO OWNER. PROVIDE NEW DISCONNECTS FOR THE NEW MECHANICAL UNIT POWER CONNECTION. REFER TO E-200 SERIES SHEETS FOR ADDITIONAL INFORMATION.

(E) - EXISTING TO REMAIN, PROTECT IN PLACE.
(D) - EXISTING TO BE DEMOLISHED.
$M - TOGGLE SWITCH, MOTOR RATED.
□F - NON-FUSED SAFETY SWITCH
WP - WEATHER PROOF

PROJECT DEMOLITION NOTES

1. ANY EXISTING WIRING SERVING DEVICES TO REMAIN IN SERVICE, AND WHICH IS INTERRUPTED BY WORK PERFORMED UNDER THIS CONTRACT, SHALL BE REROUTED TO MAINTAIN CIRCUIT CONTINUITY. ALL EXISTING SYSTEMS/DEVICES TO REMAIN. PRIOR TO COMMENCING WITH DEMOLITION, IDENTIFY ALL POWER, LIGHTING, COMMUNICATION, AND SIGNAL CIRCUITS PASSING THROUGH THE DEMOLITION AREA OR EXTENDING BEYOND THE DEMOLITION AREA. COORDINATE WITH DEMOLITION WORK OF OTHER TRADES.

2. THE EXISTING BUILDING MUST BE KEPT IN OPERATION AT ALL TIMES. MAINTAIN ELECTRICAL SERVICES AND SYSTEMS EXCEPT FOR EQUIPMENT BEING REPLACED BY THIS PROJECT. MAINTAIN CONTINUITY OF FIRE ALARM, LIFE SAFETY AND SECURITY SYSTEMS TO ALL OCCUPIED AREAS OF THE BUILDING THROUGHOUT THE CONSTRUCTION PERIOD. PROVIDE TEMPORARY WIRING AND BRANCH CIRCUITING AS NECESSARY TO MAINTAIN OPERATION OF EXISTING CIRCUITS AND SYSTEMS EXTENDING BEYOND REMODEL AREA. ASSUME FULL RESPONSIBILITY FOR ANY DISRUPTION TO EXISTING SERVICES. RECONNECT ANY SERVICES WHICH ARE TO REMAIN, AND WHICH HAVE BEEN DISCONNECTED DURING DEMOLITION OR CONSTRUCTION. ARRANGE WORK IN SUCH A MANNER THAT INTERRUPTIONS IN SERVICES OCCUR ONLY AT PRE-SCHEDULED TIMES. CARRY OUT THE WORK WITH A MINIMUM OF NOISE, DUST AND DISTURBANCE.

3. PERMANENTLY REMOVE ABANDONED ELECTRICAL EQUIPMENT, LIGHTING FIXTURES, ELECTRICAL DEVICES, POWER AND SIGNALLING WIRING DEVICES AND ASSOCIATED WIRE, RACEWAYS, AND/OR JUNCTION BOXES. THE REMOVAL OR RELOCATION OF EXISTING ELECTRICAL EQUIPMENT PRESENTLY CONCEALED IN EXISTING CONSTRUCTION SHALL BE COORDINATED WITH THE OWNER PRIOR TO REMOVAL OR RELOCATION. RACEWAYS AND CONDUCTORS SHALL BE REMOVED BACK TO THE SOURCE OR NEAREST REMAINING JUNCTION BOX OR DEVICE AS FAR AS PRACTICAL, OR WHERE COMPLETE REMOVAL NOT PRACTICAL, RENDERED PERMANENTLY SAFE.

4. ANY EXISTING SYSTEM OUTAGES SHALL BE OF MINIMUM DURATION AND AT A TIME ACCEPTABLE TO THE OWNER, ARRANGED A MINIMUM OF 10 WORKING DAYS IN ADVANCE. LONGER NOTICES AND/OR ADDITIONAL RESTRICTIONS PERTAINING TO OUTAGES MAY BE REQUIRED IN SOME INSTANCES, AS PER SPECIFICATIONS. VERIFY PROTOCOL WITH ALL PROJECT STAKEHOLDERS INCLUDING OWNER, TENANT, CONSTRUCTION MANAGER AND/OR USER GROUP(S) AS APPLICABLE.

5. ELECTRICAL EQUIPMENT, FIXTURES, AND/OR DEVICES SCHEDULED TO REMAIN OR TO BE RELOCATED THAT ARE DAMAGED DURING DEMOLITION SHALL BE REPLACED WITH SIMILAR TYPE AS APPROVED BY THE OWNER, AT NO ADDITIONAL CHARGE TO THE OWNER.

6. IN THE EVENT THAT DEMOLITION WORK AFFECTS THE STRUCTURAL SUPPORT OF EXISTING ELECTRICAL EQUIPMENT THAT IS TO REMAIN IN SERVICE, IT SHALL BE RE-SUPPORTED IN ACCORDANCE WITH ALL APPLICABLE CODES. PROVIDE TEMPORARY SUPPORTS WHERE REQUIRED.

7. UNUSED FLUSH MOUNTED DEVICES, OUTLET AND OTHER BOXES IN FINISHED AREAS SHALL BE REMOVED FROM WALL AND THE REMAINING HOLE PATCHED TO MATCH ADJACENT WALL SURFACES. UNUSED RACEWAYS AND SLEEVES SHALL BE CUT FLUSH AT CEILING, FLOOR OR WALL AND FILLED WITH GROUT OR REQUIRED FIRE SEALANT. UNUSED RACEWAYS ABOVE ACCESSIBLE CEILINGS SHALL BE REMOVED.

8. ELECTRICAL MATERIAL SCHEDULED FOR REMOVAL IS TO BE REMOVED FROM THE SITE AND PROPERLY DISPOSED OF AS PART OF THIS CONTRACT. ANY ELECTRICAL MATERIAL THE OWNER WISHES TO RETAIN TO BECOME THE PROPERTY OF THE OWNER AND TO BE REMOVED AND PLACED AT A LOCATION ON THE SITE AS DIRECTED BY THE OWNER.

9. THE DEMOLITION DRAWINGS SHOW THE GENERAL SCOPE OF THE DEMOLITION AND NOT EXACT DETAILS OR TOTAL EXTENT. FOR EXACT DETAILS AND TOTAL EXTENT, EACH SERVICE MUST BE CAREFULLY CHECKED ON SITE. BEFORE REMOVING SERVICES FOLLOW THE SERVICE THROUGH TO ENSURE OTHER AREAS OF THE BUILDING ARE NOT AFFECTED.

REGISTERED PROFESSIONAL ENGINEER
PAUL A. ERTASCHA
No. 11219
exp.06/30/2025
ELECTRICAL
STATE OF CALIFORNIA

05-13-2024

Stantec
801 S. Figueroa Street, Suite 300
Los Angeles, CA 90017

Copyright Reserved
The contractor shall verify and be responsible for all dimensions. DO NOT scale the drawing - any errors or omissions shall be reported to Stantec without delay.
This drawing is the property of Stantec and shall not be reproduced in whole or in part. Reproduction or use for any purpose other than that authorized by Stantec is forbidden.

REVISION	DESCRIPTION	DATE
3	100% RESUBMITTAL	05/13/2024
2	100% CONSTRUCTION DRAWING SUBMITTAL	03/27/2024
1	90% UPDATED CONSTRUCTION SUBMITTAL	02/13/2024

REPLACEMENT OF MECHANICAL UNITS AT SANTA ANA BUS BASE
4301 W. MAC ARTHUR BLVD., SANTA ANA, CA

DETAIL/CLEANING BUILDING ELECTRICAL DEMO ROOF PLAN

JOB #:
DESIGN BY: IZ
DRAWN BY: ERL
CHECKED BY: PKE
DATE: 02/13/2024
SCALE: As indicated
SHEET: **ED-250D**

OCTA
ORANGE COUNTY TRANSPORTATION AUTHORITY
550 SOUTH MAIN STREET, ORANGE, CA

Autodesk Docs://2014233703_Santa_Ana_Bus/elec_SantaAnaBus_2014233703.rvt
5/8/2024 9:59:56 AM

IFB 4-2550 EXHIBIT B

SPECIAL INSPECTION AND TEST REQUIREMENTS

TYPE		FREQUENCY	REQUIRED INSPECTIONS AND/OR TESTS	REFERENCES CODES/STANDARDS
NONSTRUCTURAL COMPONENTS				
1. PLUMBING, MECHANICAL, AND ELECTRICAL COMPONENTS	☑	PERIODIC	INSTALLATION OF MECHANICAL AND ELECTRICAL EQUIPMENT, INCLUDING DUCTWORK, PIPING SYSTEMS AND THEIR STRUCTURAL SUPPORTS, WHERE AUTOMATIC FIRE SPRINKLER SYSTEMS ARE INSTALLED TO VERIFY ONE OF THE FOLLOWING REQUIREMENTS (SDC C,D,E,F): • MINIMUM CLEARANCES HAVE BEEN PROVIDED AS REQUIRED BY ASCE-7 SECTION 13.2.3 • A NOMINAL CLEARANCE OF NOT LESS THAN 3 INCHES HAS BEEN PROVIDED BETWEEN FIRE PROTECTION SPRIKLER SYSTEM DROPS AND SPRIGS AND: STRUCTURAL MEMBERS NOT USED COLLECTIVELY OR INDEPENDENTLY TO SUPPORT THE SPRINKERS; EQUIPMENT ATTACHED TO THE BUILDING STRUCTURE; AND OTHER SYSTEMS' PIPING	CBC 1705.12.6
	☑	PERIODIC	DESIGNATED SEISMIC SYSTEMS - EXAMINE DESIGNATED SEISMIC SYSTEMS REQUIRING SEISMIC QUALIFICATION IN ACCORDANCE WITH ASCE 7 SECTION 13.2.2 AND VERIFY THAT THE LABEL, ANCHORAGE AND MOUNTING CONFORM TO THE CERTIFICATE OF COMPLIANCE (SDC C,D,E,F): • ACTIVE MECHANICAL AND ELECTRICAL EQUIPMENT THAT MUST REMAIN OPERABLE FOLLOWING THE DESIGN EARTHQUAKE GROUND MOTION • COMPONENTS WITH HAZARDOUS SUBSTANCES AND ASSIGNED A COMPONENT IMPORTANCE FACTOR, I_p OF 1.5.	CBC 1705.12.4

STATEMENT OF SPECIAL INSPECTIONS

INSPECTION AND TESTING REQUIREMENTS ON THIS SHEET ARE IN ACCORDANCE WITH SECTION 1705 OF THE CALIFORNIA BUILDING CODE (CBC) AND HAVE BEEN IDENTIFIED AS A STATEMENT OF SPECIAL INSPECTIONS AS REQUIRED BY CBC SECTION 1704.3. THE OWNER OF THE OWNER'S AUTHORIZED AGENT, OTHER THAN THE CONTRACTOR, SHALL EMPLOY ONE OR MORE APPROVED AGENCIES TO PROVIDE THE SPECIAL INSPECTIONS AND TESTS DURING CONSTRUCTION AS REQUIRED BY CBC SECTION 1705 AND IDENTIFY THE APPROVED AGENCIES TO THE BUILDING OFFICIAL. THESE SPECIAL INSPECTIONS AND TESTS ARE IN ADDITION TO THE INSPECTIONS BY THE BUILDING OFFICIAL THAT ARE IDENTIFIED IN CBC SECTION 110. SPECIAL INSPECTORS SHALL BE QUALIFIED IN ACCORDANCE WITH CBC SECTION 1704.2.1, AND ALL OTHER APPLICABLE SECTIONS AND STANDARDS.

DEFINITIONS

SPECIAL INSPECTION	INSPECTION OF CONSTRUCTION REQUIRING THE EXPERTISE OF AN APPROVED SPECIAL INSPECTOR IN ORDER TO ENSURE COMPLIANCE WITH THE BUILDING CODE AND THE APPROVED CONSTRUCTION DOCUMENTS.
SPECIAL INSPECTOR	A QUALIFIED PERSON EMPLOYED OR RETAINED BY AN APPROVED AGENCY AND APPROVED BY THE BUILDING OFFICIAL AS HAVING THE COMPETENCE NECESSARY TO INSPECT A PARTICULAR TYPE OF CONSTRUCTION REQUIRING SPECIAL INSPECTION.
PERIODIC	SPECIAL INSPECTION BY THE SPECIAL INSPECTOR WHO IS INTERMITTENTLY PRESENT WHERE THE WORK HAS BEEN OR IS BEING PERFORMED AND AT THE COMPLETION OF WORK.
CONTINUOUS	SPECIAL INSPECTION BY THE SPECIAL INSPECTOR WHO IS PRESENT CONTINUOUSLY WHEN AND WHERE THE WORK TO BE INSPECTED IS BEING PERFORMED
☑	INDICATES SPECIAL INSPECTION OF ITEM MAY BE REQUIRED FOR THE WORK DEFINED IN THE CONSTRUCTION DOCUMENTS FOR THIS PROJECT.

GENERAL NOTES

VI. STRUCTURAL LUMBER

1. ALL STRUCTURAL SAWN LUMBER SHALL BE DOUGLAS FIR LARCH AS GRADED BY THE WWPA OR WCLIB WITH THE FOLLOWING MINIMUM GRADES, UNLESS NOTED OTHERWISE:
   A. 4X AND LARGER BEAMS OR JOISTS, CONCEALED: NO. 1
   B. 4X AND LARGER BEAMS OR JOISTS, EXPOSED: SELECT STRUCTURAL
2. ALL STRUCTURAL COMPOSITE LUMBER (SCL) OR ENGINEERED LUMBER SHALL BE AS FOLLOWS:
   A. I-JOISTS: TJI JOISTS MANUFACTURED BY WEYERHAUSER (ESR-1153)
   B. LSL: TIMBERSTRAND LSL MANUFACTURED BY WEYERHAUSER (ESR-1387)
   C. LVL: MICROLLAM LVL (2.0E) MANUFACTURED BY WEYERHAUSER (ESR-1387)
   D. PSL: PARALLAM PSL (2.0E) MANUFACTURED BY WEYERHAUSER (ESR-1387)
   E. SUBSTITUTION OF PRODUCTS LISTED ABOVE SHALL BE SUBMITTED TO ENGINEER FOR REVIEW AND APPROVAL.
3. ALL STRUCTURAL TIMBER FRAMING SHALL HAVE A MAXIMUM MOISTURE CONTENT OF 19% AT THE TIME OF ENCLOSURE, REGARDLESS OF THE MOISTURE CONTENT AT THE TIME OF MANUFACTURE. TIMBER FLOOR FRAMING, INCLUDING JOISTS AND BEAMS, WITH MORE THAN 2 FRAMED LEVELS ABOVE THEM SHALL BE DESIGNATED AS 'S-DRY' OR 'MC15' AND HAVE A MAXIMUM MOISTURE CONTENT OF 15% AT THE TIME OF ENCLOSURE.
4. ALL LUMBER LOCATED IN DIRECT CONTACT WITH CONCRETE OR MASONRY INCLUDING BUT NOT LIMITED TO SILL PLATES, NAILERS, AND LEDGERS SHALL BE PRESSURE TREATED DOUGLAS FIR.
5. ALL HARDWARE SHALL BE SIMPSON STRONG-TIE CO INSTALLED PER MANUFACTURERS RECOMMENDATIONS. SUBSTITUTION OF EQUIVALENT HARDWARE FROM AN ALTERNATE MANUFACTURER SHALL BE SUBMITTED TO THE ENGINEER FOR REVIEW AND APPROVAL.
6. MINIMUM FASTENING AND NAILING OF TIMBER COMPONENTS SHALL BE IN ACCORDANCE WITH CBC TABLE 2304.10.1.
7. FASTENERS SHALL BE PROVIDED NEW AND WITHOUT EXCESSIVE RUST. ALL FASTENERS EXPOSED TO WEATHER SHALL BE GALVANIZED.
8. ALL METAL FASTENERS IN CONTACT WITH PRESERVATIVE-TREATED LUMBER SHALL BE STAINLESS STEEL OR OTHERWISE CERTIFIED BY THE MANUFACTURER TO RESIST CORROSION CAUSED BY THE SPECIFIC TREATMENT APPLIED TO THE WOOD.
9. DO NOT CUT, BORE, COUNTERSINK OR NOTCH WOOD MEMBERS EXCEPT WHERE EXPLICITY SHOWN IN THE DETAILS.
10. BOLTS AND LAG SCREWS:
   A. BOLTS AND LAG SCREWS SHALL CONFORM TO ASTM A307 AND MEET THE DIMENSIONAL STANDARDS OF ANSI/ASME B18.2.1.
   B. HOLES FOR BOLTS SHALL BE A MINIMUM 1/32" TO A MAXIMUM OF 1/16" LARGER THAN THE BOLT DIAMETER.
   C. BOLTS SHALL BE ACCURATELY ALIGNED IN MAIN MEMBERS AND SIDE PLATES. BOLTS SHALL NOT BE FORCIBLY DRIVEN INTO PLACE.
   D. BORED LEAD HOLES FOR LAG SCREWS SHALL BE 40-70% OF THE SHANK DIAMETER AT THE THREADED PORTION OF THE SCREW, AND THE SAME DIAMETER AS THE SHANK AT THE SHANK.
   E. LAG SCREWS SHALL BE TURNED, NOT DRIVEN INTO PLACE.
   F. ALL BOLTS, NUTS, AND LAG SCREWS SHALL BE PROVIDED WITH FLAT OR MALLEABLE WASHERS WHERE BEARING AGAINST DIRECTLY AGAINST WOOD.
   G. ALL BOLTS AND LAG SCREWS SHALL BE TIGHTENED UPON INSTALLATION AND RE-TIGHTENED BEFORE CLOSING IN OR AT COMPLETION OF JOB.

VII. STRUCTURAL STEEL:

1. STRUCTURAL STEEL SHALL BE DETAILED, FABRICATED AND ERECTED IN ACCORDANCE WITH AISC 360.
2. UNLESS OTHERWISE NOTED, ALL STRUCTURAL STEEL SHALL CONFORM TO THE FOLLOWING:
   A. ANGLES AND CHANNELS: ASTM A36 (FY = 36 KSI)
   B. PLATES, BARS: ASTM A36 (FY = 36 KSI)
3. FIELD CUTTING OR DRILLING STRUCTURAL STEEL IS STRICTLY PROHIBITED WITHOUT PRIOR REVIEW AND APPROVAL BY SEOR. ALL HOLES AND CUTS SHALL BE PERFORMED IN THE SHOP AS IDENTIFIED ON STRUCTURAL DRAWINGS OR SHOP DRAWINGS.
4. WELDED CONNECTIONS:
   A. ALL WELDS SHALL CONFORM TO AWS D1.1. WELDING ELECTRODES SHALL BE CLASS E70XX.
   B. MINIMUM FILLET WELD SIZE SHALL BE 1/4 " UNLESS NOTED OTHERWISE.
   C. WELDING SHALL BE PERFORMED BY QUALIFIED WELDERS, REFER TO SPECIFICATIONS.
   D. WHERE FIELD WELDING IS SPECIFICALLY NOTED, THE DESIGNATION IS GIVEN AS A SUGGESTED CONSTRUCTION PROCEDURE ONLY. THE CONTRACTOR SHALL DETERMINE SUITABILITY OF SHOP OR FIELD WELDING FOR ALL CONDITIONS. ALL BOLTED CONNECTIONS MUST BE IN ADDITION TO THESE REQUIREMENTS.
   E. WELD LENGTHS SPECIFIED ON PLANS ARE THE NET EFFECTIVE LENGTH. WELD SIZE SHALL BE AISC MINIMUM UON AS LARGER WELD.
   F. ALL CJP WELDS SHALL BE MADE WITH FILLER METAL WITH A MINIMUM CVN TOUGHNESS OF 20 FT-LBS AT -20 DEGREES F. NDT AND INSPECTIONS PER THE 'STRUCTURAL TESTING AND INSPECTIONS' SHEET.
   G. CONTRACTOR TO PROVIDE WELDING PROCEDURE SPECIFICATION FOR REVIEW AND APPROVAL BY SEOR.
5. STEEL FINISHES SHALL BE AS FOLLOWS, UNLESS NOTED OTHERWISE IN ARCHITECTURAL SPECIFICATIONS:
   A. INTERIOR TO RECEIVE ENCASEMENT OR SPRAY-ON FIREPROOFING: NONE
   B. INTERIOR TO RECEIVE FINISH PAINT: REFER TO SPECIFICATIONS
   C. EXTERIOR: HOT-DIPPED GALVANIZED COATING CONFORMING TO ASTM A123 OR HIGH-PERFORMANCE COATING AT CONDITIONS AS IDENTIFIED IN SPECIFICATIONS.
6. SCREWS SHALL BE SELF-TAPPING AND COMPLY WITH ASTM C1513.

I. GENERAL NOTES:

1. ALL STRUCTURAL WORK SHALL CONFORM TO THE DRAWINGS, THE PROJECT SPECIFICATIONS, ALL DRAWING NOTES, AND THE 2022 CALIFORNIA BUILDING CODE (CBC).
2. ALL APPLICABLE REFERENCE STANDARDS, AS MODIFIED BY THE BUILDING CODE, INCLUDE:
   A. ASCE/SEI 7-16: MINIMUM DESIGN LOADS FOR BUILDINGS AND OTHER STRUCTURES
   B. AWS D1.1: STRUCTURAL WELDING CODE - STEEL
3. THE SCOPE OF WORK IS NOT SOLELY DEFINED BY THESE DOCUMENTS.
4. TYPICAL DETAILS APPLY THROUGHOUT THE PROJECT, EVEN IF NOT SPECIFICALLY REFERENCED IN PLANS OR DETAILS. DETAILS OF CONSTRUCTION NOT FULLY SHOWN OR NOTED ON THE DRAWINGS NOR CALLED OUT IN THE SPECIFICATIONS SHALL BE OF THE SAME SIZE AND CHARACTER AS FOR SIMILAR CONDITIONS WHICH ARE SHOWN AND NOTED.
5. ALL FORCES INDICATED IN THE STRUCTURAL DRAWINGS ARE SERVICE LOADS AS DEFINED BY ASCE-7, UNLESS NOTED OTHERWISE.
6. DO NOT USE SCALED DIMENSIONS; USE ONLY WRITTEN DIMENSIONS. WHERE NO DIMENSION IS PROVIDED, CONSULT THE ARCHITECT FOR CLARIFICATIONS BEFORE PROCEEDING WITH WORK.
7. THE CONTRACTOR SHALL BE SOLELY RESPONSIBLE FOR THE CONDITIONS OF THE JOB SITE INCLUDING SAFETY OF PERSONS AND PROPERTY AND THE MEANS AND METHODS OF CONSTRUCTION.
8. ALL STRUCTURAL WORK SHALL BE COORDINATED WITH ARCHITECTURAL, MECHANICAL, ELECTRICAL, PLUMBING, ETC. REQUIREMENTS. REFER TO ARCHITECTURAL DRAWINGS FOR DIMENSIONS NOT SHOWN ON PLAN. DISCREPANCIES AND/OR INTERFERENCES SHALL BE REPORTED TO THE ARCHITECT IMMEDIATELY.
9. OPENINGS SHALL NOT BE MADE IN ANY STRUCTURAL MEMBER UNLESS SPECIFICALLY SHOWN ON THE STRUCTURAL DRAWINGS OR APPROVED BY THE STRUCTURAL ENGINEER.
10. DEFICIENT WORK AND WORK NOT IN CONFORMANCE WITH THE CONTRACT DOCUMENTS AS IDENTIFIED BY THE ARCHITECT OR INSPECTOR SHALL BE REPAIRED AT THE CONTRACTOR'S EXPENSE. CONTRACTOR SHALL COMPENSATE OWNER FOR SERVICES ARISING FROM DEFICIENT WORK.
11. CONSTRUCTION MATERIALS SHALL BE SPREAD OUT WHEN PLACED ON FRAMED FLOORS OR ROOFS. THE CONSTRUCTION MATERIAL LOAD SHALL NOT EXCEED THE DESIGN LIVE LOAD PER SQUARE FOOT. CONTRACTOR SHALL BE RESPONSIBLE FOR SHORING WHERE STRUCTURE IS NOT COMPLETE OR HAS NOT ATTAINED DESIGN STRENGTH.

II. DESIGN LOADS:

1. WIND LOAD:

A. ULTIMATE DESIGN BASIC WIND SPEED Vult	95 MPH
B. WIND EXPSOURE CATEGORY:	C
C. INTERNAL PRESSURE COEFFICIENT (GCPi):	+/- 0.18
D. GUST EFFECT FACTOR (G):	0.85

2. SEISMIC LOAD:

A. SITE CLASS:	D (DEFAULT)
B. RISK CATEGORY:	II
C. SEISMIC IMPORTANCE FACTOR (I_p):	1.00
D. MAPPED SPECTRAL RESPONSE:	
a. SHORT PERIOD S_S:	1.32g
b. 1-SECOND PERIOD S_1:	0.48 g
E. DESIGN SPECTRAL RESPONSE (5% DAMPED):	
a. SHORT PERIOD S_{DS}:	1.06 g
F. SEISMIC DESIGN CATEGORY:	D

III. EXISTING STRUCTURE & EXISTING CONDITIONS

1. CONTRACTOR IS TO NOTIFY ENGINEER OF QUESTIONABLE EXISTING STRUCTURAL COMPONENTS (MASONRY WALLS, STEEL BEAMS & LINTEL, EXPOSED FOUNDATIONS, ETC.) AND FRAMING CONNECTIONS WHEN ENCOUNTERED.
2. CONTRACTOR TO VERIFY EXACT LOCATION OF ALL EXISTING STRUCTURAL COMPONENTS THAT WILL BE CONNECTED TO NEW FRAMING PRIOR TO STEEL FABRICATION. IT IS THE CONTRACTOR'S RESPONSIBILITY TO VERIFY ALL EXISTING DIMENSIONS AND COORDINATE THESE DIMENSIONS WITH THE STEEL FABRICATOR PRIOR TO STEEL FABRICATION TO ENSURE ARCHITECTURAL AND STRUCTURAL DESIGN CONCEPT. CONTRACTOR SHALL NOTIFY ARCHITECT AND/OR ENGINEER OF DISCREPANCIES.

IV. MECHANICAL/ELECTRICAL/PLUMBING SYSTEM SUPPORTS

1. THE CONTRACTOR SHALL DESIGN AND SUPPLY ALL ADDITIONAL MISCELLANEOUS METALS AND SYSTEM SUPPORT COMPONENTS THAT ARE NECESSARY TO SUPPORT ALL MECHANICAL, ELECTRICAL (TELECOM, AUDIO VISUAL, ETC.) AND PLUMBING/FIRE PROTECTION SYSTEMS. SUCH METALS AND SUPPORT COMPONENTS AND THEIR CONNECTIONS SHALL BE PROVIDED AS NECESSARY TO DIRECTLY AND CONCENTRICALLY IMPOSE LOADS ON THE PRIMARY STRUCTURE. STEEL ROOF DECK SHALL NOT DIRECTLY SUPPORT THESE SYSTEMS. THE CONNECTIONS TO THE PRIMARY STRUCTURE ARE SUBJECT TO THE REQUIREMENTS OF THE MISCELLANEOUS METALS SECTION ABOVE.

V. QUALITY ASSURANCE AND SPECIAL INSPECTIONS

1. OWNER WILL ENGAGE AN INDEPENDENT TESTING AGENCY TO PERFORM THE TESTS AND INSPECTIONS SHOWN ON THE 'STRUCTURAL TESTING AND INSPECTIONS' SHEET. IT IS THE CONTRACTOR'S RESPONSIBILITY TO PROVIDE ADEQUATE PRIOR NOTICE TO ALLOW FOR COMPLETION OF THESE REQUIREMENTS.

ABBREVIATIONS

#	POUND
&	AND
(N)	NEW
@	AT
AB	ANCHOR BOLT
ACS	ALL COMMON SIDES
ADDL	ADDITIONAL
AESS	ARCHITECTURALLY EXPOSED STRUCTURAL STEEL
ALT	ALTERNATE
ARCH, ARCH'L	ARCHITECT, ARCHITECTURAL
BL	BRICKLEDGE
BLDG	BUILDING
BLKG	BLOCKING
BM	BEAM
BN	BOUNDARY NAILING
BO	BOTTOM OF
BOB	BOTTOM OF BEAM
BOD	BOTTOM OF DECK
BOS	BOTTOM OF STEEL
BOT, BOTT	BOTTOM
BP	BASE PLATE
BRBF	BUCKLING RESTRAINED BRACED FRAME
BRG	BEARING
BTWN	BETWEEN
C	CHANNEL
CB	CONCRETE BEAM
CC	CARRIED COLUMN
CEN	CENTER
CFMF	COLD-FORMED METAL FRAMING
CIP	CAST IN PLACE
CJ	CONTROL JOINT
CJP	COMPLETE JOINT PENETRATION
CL	CENTERLINE
CLR	CLEAR
CMU	CONCRETE MASONRY UNIT
COL	COLUMN
CONC	CONCRETE
CONN	CONNECT, CONNECTION
CONT	CONTINUOUS
CTR	CENTERED
CWI	CERTIFIED WELDING INSPECTOR
D, DIA	DIAMETER
DBA	DEFORMED BAR ANCHOR
DBL	DOUBLE
DEF	DEFORMED, DEFINITION
DEFL	DEFLECTION
DET, DTL	DETAIL
DIAG	DIAGONAL
DN	DOWN
DWG	DRAWING
EA	EACH
EF	EACH FACE
EJ	EXPANSION JOINT
EL	ELEVATION
ELEV	ELEVATOR
EN	EDGE NAILING
EOR	ENGINEER OF RECORD
EOS	EDGE OF SLAB
EQ	EQUAL
EQ SPA	EQUAL SPACE
ES	EACH SIDE
EW	EACH WAY
EXIST, (E)	EXISTING
EXT	EXTERIOR
FD	FLOOR DRAIN
FDN, FNDN	FOUNDATION
FF EL	FINISH FLOOR ELEVATION
FN	FIELD NAILING
FOA	FACE OF ANGLE
FOC	FACE OF CONCRETE
FOM	FACE OF MASONRY
FT	FEET
FTG	FOOTING
Fy	YIELD STRESS
GA	GAGE, GAUGE
GALV	GALVANIZED
GB	GRADE BEAM
GLB	GLUED-LAMINATED BEAM
GT	GIRDER TRUSS
H, HORIZ	HORIZONTAL
HC	HOLLOW CORE
HI	HIGH
HK	HOOK
HSS	HOLLOW STRUCTURAL STEEL
IN	INCHES
INFO	INFORMATION
INT	INTERIOR
JST	JOIST
JT	JOINT
K	KIPS
KB	KNEE BRACE
L	ANGLE
LB	POUND
LF	LINEAR FOOT
LG	LENGTH
LLBB	LONG LEG BACK TO BACK
LLH	LONG LEG HORIZONTAL
LLV	LONG LEG VERTICAL
LO	LOW
LT WT	LIGHTWEIGHT
LVL	LEVEL
LWC	LIGHT WEIGHT CONCRETE
MAX	MAXIMUM
MC	MOMENT CONNECTION
MCJ	MASONRY CONTROL JOINT
MECH	MECHANICAL
MEP	MECHANICAL, ELECTRICAL & PLUMBING
MEZZ	MEZZANINE
MFR, MANUF	MANUFACTURER
MID	MIDDLE
MIL	MILLIMETER
MIN	MINIMUM
MISC	MISCELLANEOUS
MO	MASONRY OPENING
MTL	METAL
N	NORTH
NA	NOT APPLICABLE
NDT	NON-DESTRUCTIVE TESTING
NIC	NOT IN CONTRACT
NTS	NOT TO SCALE
OC	ON CENTER
OH	OPPOSITE HAND
OPNG	OPENING
OPP	OPPOSITE
OWJ	OPEN WEB JOIST
PAF	POWER ACTUATED FASTENERS
PERP	PERPENDICULAR
PJP	PARTIAL JOINT PENETRATION
PL	PLATE
PLF	POUNDS PER LINEAR FOOT
PLYWD	PLYWOOD
PSF	POUNDS PER SQUARE FOOT
PSI	POUNDS PER SQUARE INCH
R	RADIUS
REF	REFER, REFERENCE
REINF	REINFORCED, REINFORCEMENT
REM	REMAINDER
REQ'D	REQUIRED
REQ'MTS, REQMTS	REQUIREMENTS
REV	REVISION
SAD	SEE ARCHITECTURAL DRAWINGS
SC	SLIP CRITICAL
SCHED	SCHEDULE
SECT	SECTION
SF	SQUARE FEET
SHT	SHEET
SHTG	SHEATHING
SIM	SIMILAR
SMD	SEE MECHANICAL DRAWINGS
SMS	SHEET METAL SCREW
SOG	SLAB ON GRADE
SPA	SPACES, SPACING
SQ	SQUARE
SSH	SHORT SLOTTED HOLE
STD	STANDARD
STL	STEEL
STRUCT	STRUCTURE, STRUCTURAL
SUPP	SUPPORT
T&B	TOP AND BOTTOM
TEMP	TEMPORARY
THK	THICK
TO	TOP OF
TOC	TOP OF CONCRETE
TOF	TOP OF FOUNDATION
TOM	TOP OF MASONRY
TOS	TOP OF STEEL
TOSC	TOP OF STRUCTURAL CONCRETE
TOSL	TOP OF SLAB
TOT	TOTAL
TOW	TOP OF WALL
TYP	TYPICAL
UON	UNLESS OTHERWISE NOTED
V, VERT	VERTICAL
VIF	VERIFY IN FIELD
W	WIDE FLANGE
W/	WITH
W/O	WITHOUT
WB	WIND BRACE
WBBP	WIND BRACE BASEPLATE
WHSS	WELDED HEADED STEEL STUD
WP	WORKING POINT, WORK POINT
WRT	WITH RESPECT TO
WT	WEIGHT
WWF	WELDED-WIRE FABRIC
YD	YARD

REGISTERED PROFESSIONAL ENGINEER ALAN W. DYCK 5470 EXP. 09-30-24 STRUCTURAL STATE OF CALIFORNIA
03-22-24

Stantec
801 S. Figueroa Street, Suite 300
Los Angeles, CA 90017

Copyright Reserved
The Contractor shall verify and be responsible for all dimensions. DO NOT scale the drawing - any errors or omissions shall be reported to Stantec without delay.
The Copyrights to all designs and drawings are the property of Stantec. Reproduction or use for any purpose other than that authorized by Stantec is forbidden.

REVISION	DESCRIPTION	DATE
5/13/2024	100% RESUBMITTAL	
03/27/2024	100% CONSTRUCTION DRAWING SUBMITTAL	
02/13/2024	UPDATED 90% CONSTRUCTION DRAWING SUBMITTAL	
12/07/2023	90% CONSTRUCTION DRAWING SUBMITTAL	

REPLACEMENT OF MECHANICAL UNITS AT SANTA ANA BUS BASE
4301 W. MAC ARTHUR BLVD., SANTA ANA, CA

GENERAL NOTES

JOB #:	
DESIGN BY:	IS
DRAWN BY:	DK
CHECKED BY:	MP
DATE:	12/07/2023
SCALE:	3/4" = 1'-0"
SHEET:	S-100D

OCTA
ORANGE COUNTY TRANSPORTATION AUTHORITY
550 SOUTH MAIN STREET, ORANGE, CA

Autodesk Docs://2014233703_Santa_Ana_Bus/stn_struc_2014233703_Santa_Ana_Bus_OCTA_CTO-3_Mech_Units.rvt

3/22/2024 10:38:08 AM

IFB 4-2550 EXHIBIT B

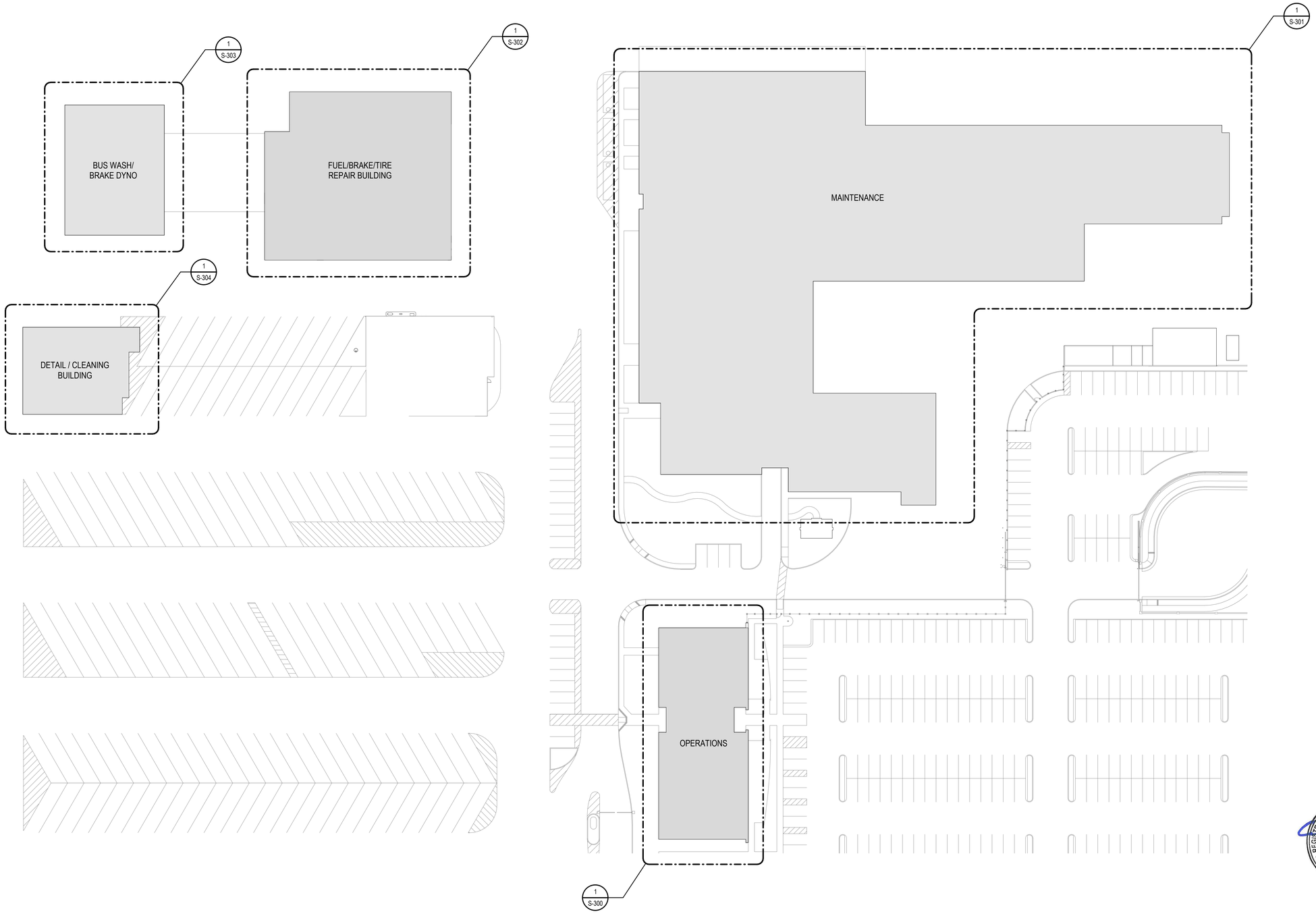

1 S-200 **OVERALL PLAN**
1" = 40'-0"

Stantec
801 S. Figueroa Street, Suite 300
Los Angeles, CA 90017

Copyright Reserved
The Contractor shall verify and be responsible for all dimensions. DO NOT scale the drawing - any errors or omissions shall be reported to Stantec without delay.
This drawing is the property of Stantec and shall not be reproduced in whole or in part. Reproduction or use for any purpose other than that authorized by Stantec is forbidden.

REVISION	DESCRIPTION	DATE
5/13/2024	100% RESUBMITTAL	
03/27/2024	100% CONSTRUCTION DRAWING SUBMITTAL	
02/13/2024	UPDATED 90% CONSTRUCTION DRAWING SUBMITTAL	
12/07/2023	90% CONSTRUCTION DRAWING SUBMITTAL	

REPLACEMENT OF MECHANICAL UNITS AT SANTA ANA BUS BASE
4301 W. MAC ARTHUR BLVD., SANTA ANA, CA

OVERALL PLAN

JOB #:	
DESIGN BY:	IS
DRAWN BY:	DK
CHECKED BY:	MP
DATE:	12/07/2023
SCALE:	1" = 40'-0"
SHEET:	S-200D

REGISTERED PROFESSIONAL ENGINEER
ALAN W. DYER
5470
EXP. 09-30-24
STRUCTURAL
STATE OF CALIFORNIA
03-22-24

OCTA
ORANGE COUNTY
TRANSPORTATION AUTHORITY
550 SOUTH MAIN STREET, ORANGE, CA

Autodesk Docs://2014233703_Santa_Ana_Bus/stn_struc_2014233703_Santa_Ana_Bus_OCTA_CTO-3_Mech_Units.rvt

3/22/2024 10:38:09 AM

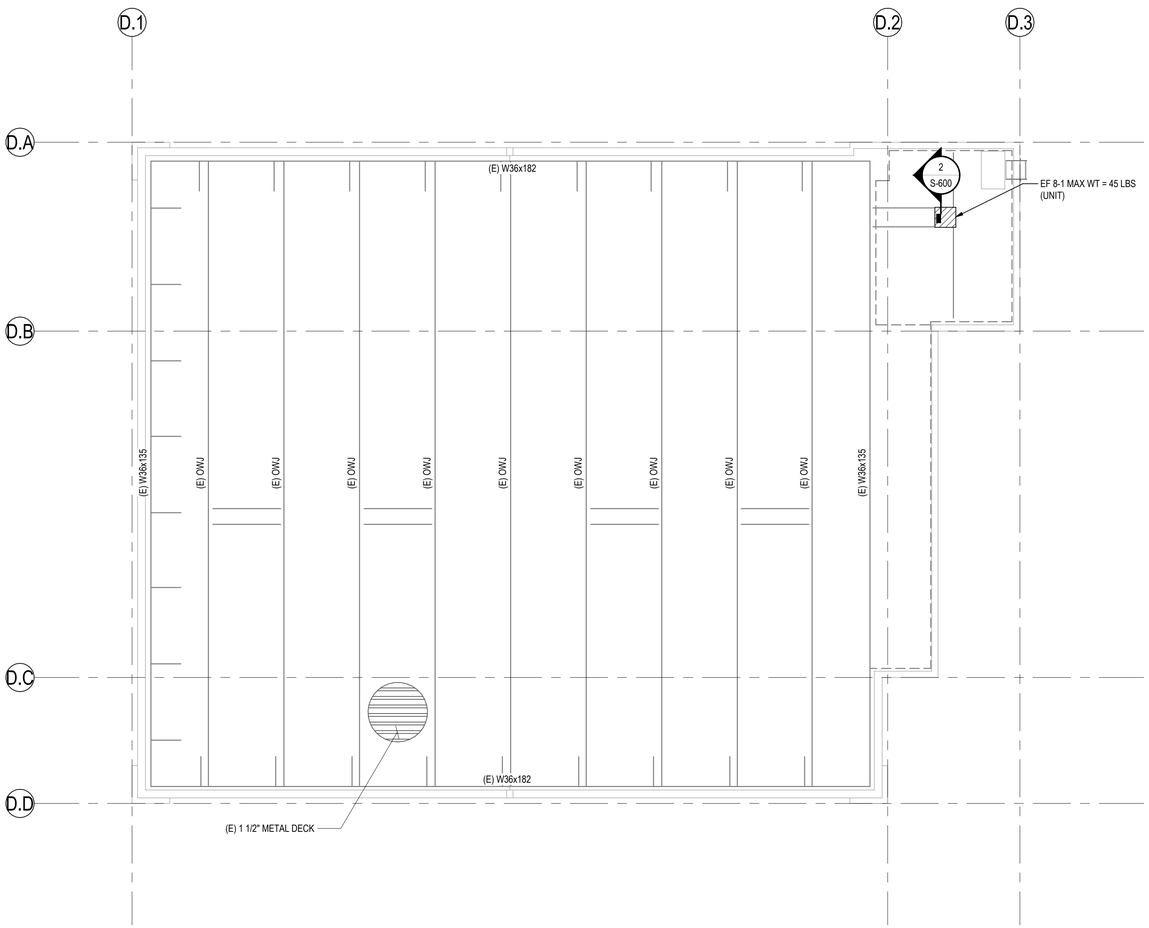

ROOF PLAN NOTES:

1. SEE SHEET S-100 FOR STRUCTURAL GENERAL NOTES
2. VERIFY/OBTAIN ALL DIMENSIONS FROM MEP DRAWINGS.
3. INDICATES (E) EXTERIOR PERIMETER WALL.
4. PROVIDE AND COORDINATE OPENING FOR MECHANICAL WORK AS REQUIRED.
5. CONTRACTOR TO FIELD VERIFY EXISTING CONDITIONS PRIOR TO COMMENCING WORKS. CONTRACTOR TO NOTIFY EOR OF DISREPANCIES BETWEEN FIELD CONDITIONS AND DRAWINGS.
6. INDICATES (N) MECHANICAL UNIT TO REPLACE EXISTING TYP UON.
7. EXISTING ROOF FRAMING INFORMATION WAS OBTAINED FROM RECORD DRAWINGS DATED 10/11/06.

1 S-304 **DETAIL/CLEANING BUILDING STRUCTURAL ROOF PLAN**
1/8" = 1'-0"

N

Stantec
801 S. Figueroa Street, Suite 300
Los Angeles, CA 90017

Copyright Reserved
The Contractor shall verify and be responsible for all dimensions. DO NOT scale the drawing - any errors or omissions shall be reported to Stantec without delay.
The Copyright to all designs and drawings are the property of Stantec. Reproduction or use for any purpose other than that authorized by Stantec is forbidden.

REVISION	DESCRIPTION	DATE
5/13/2024	100% RESUBMITTAL	
03/27/2024	100% CONSTRUCTION DRAWING SUBMITTAL	
02/13/2024	UPDATED 90% CONSTRUCTION DRAWING SUBMITTAL	
12/07/2023	90% CONSTRUCTION DRAWING SUBMITTAL	

REPLACEMENT OF MECHANICAL UNITS AT SANTA ANA BUS BASE
4301 W. MAC ARTHUR BLVD., SANTA ANA, CA

DETAIL/CLEANING BUILDING STRUCTURAL ROOF PLAN

JOB #:	
DESIGN BY:	IS
DRAWN BY:	DK
CHECKED BY:	MP
DATE:	12/07/2023
SCALE:	1/8" = 1'-0"
SHEET:	S-304D

REGISTERED PROFESSIONAL ENGINEER
ALAN W. DYCK
5470
EXP. 09-30-24
STRUCTURAL
STATE OF CALIFORNIA

03-22-24

OCTA
ORANGE COUNTY TRANSPORTATION AUTHORITY
550 SOUTH MAIN STREET, ORANGE, CA

Autodesk Docs://2014233703_Santa_Ana_Bus/stn_struc_2014233703_Santa_Ana_Bus_OCTA_CTO-3_Mech_Units.rvt

3/22/2024 10:38:17 AM

MODEL #'S	WT (LBS)	B (IN)	D (IN)	H (IN)	CG (IN)
SF 4-1	175	26	26	27.25	49
SF 5-1, 5-2, 5-3	766	52	52	39.25	56
SF 5-4	783	52	52	39.25	56
SF 5-5	307	34	34	27.25	49
SF 5-8	199	26	26	27.25	49
SF 5-9,6-2	427	40	40	31.25	52
SF 5-12	194	26	26	27.25	49
SF 5-13,5-16	196	26	26	27.25	49
SF 5-14	307	34	34	27.25	49
SF 5-15	194	26	26	27.25	49
SF 6-1	783	52	52	39.25	56
AC 4-2	419	52	45	46	60
AC 5-1, 5-2	419	52	45	46	73

NOTES:
1. MAX WEIGHT DOES NOT INCLUDE (E) CURB.
2. RE-USE EXISTING CURB SMD.

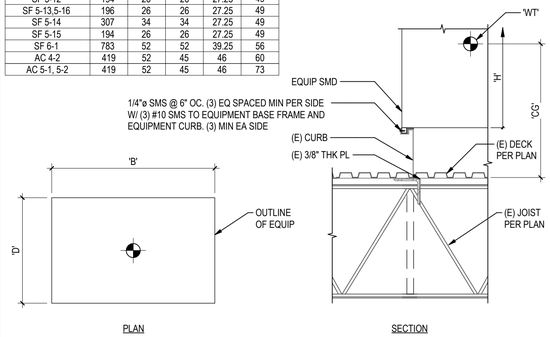

4 S-600 MECH UNIT ANCHORAGE GROUP C

NTS

MODEL #'S	WT (LBS)	B (IN)	D (IN)	H (IN)	CG (IN)
EF 5-1	2595	66	66	136.79	122
EF 5-2 & 5-5	2095	60	60	125.19	108
EF 5-3 & 5-4	2095	60	60	125.19	108
EF 5-6	745	40	40	83.45	94
EF 5-25	1035	48	48	103.79	105
EF 5-28	1225	66	66	134.79	121
EF 5-37	1036	48	48	103.79	105
EF 6-1	2113	60	60	127.19	117
EF 6-2	1805	56	56	120.45	114
EF 6-3	1065	48	48	101.79	104
SF 5-6	352	34	34	27.25	71
SF 5-10	377	34	34	27.25	71

NOTES:
1. MAX WEIGHT DOES NOT INCLUDE (E) CURB.
2. RE-USE EXISTING CURB SMD.

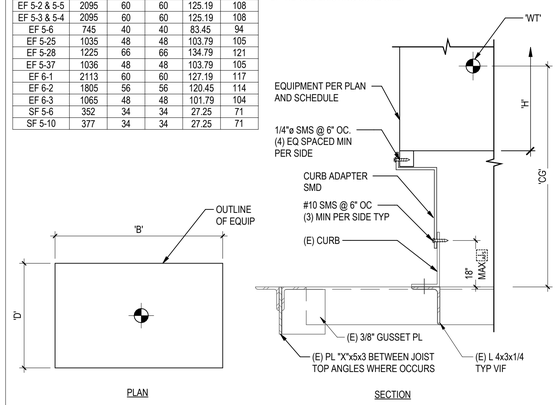

3 S-600 MECH UNIT ANCHORAGE GROUP B

NTS

MODEL #'S	WT (LBS)	B (IN)	D (IN)	H (IN)	CG (IN)
EF 4-1	45	19	19	28.25	46
EF 4-2	54	19	19	28.25	46
EF 4-3	54	19	19	28.25	46
EF 4-4, 5-26	34	19	19	13.38	38
EF 5-7, 5-8, 5-9, 5-10	165	34	34	33.88	49
EF 5-11	28	17	17	13.5	38
EF 5-13	54	19	19	28.25	46
EF 5-16, 5-17, 5-18	165	34	34	33.88	49
EF 5-19	140	30	30	28.63	46
EF 5-20	97	22	22	29.75	47
EF 5-21, 5-22	132	30	30	28.63	46
EF 5-24	76	22	22	29.75	47
EF 5-29	84	22	22	29.75	47
EF 5-31	119	22	22	29.75	47
EF 5-32	34	19	19	13.38	38
EF 5-33	203	34	34	33.88	49
EF 5-34	119	22	22	29.75	47
EF 5-35	67	19	19	28.25	46
EF 5-38	54	19	19	28.25	46
EF 5-39	40	19	19	15.25	39
EF 5-40	57	19	19	28.25	46
EF 5-41	72	22	22	29.75	47
EF 6-4	28	17	17	13.5	38
EF 6-6	37	19	19	13.38	38
EF 6-7	203	34	34	33.88	49
EF 6-8	34	19	19	13.38	38
EF 6-9	73	22	22	29.75	47
EF 7-1	773	40	40	36	50
EF 7-2	141	30	30	28.63	46
EF 8-1	45	19	19	28.25	46
EF 5-42	95	22.91	30.88	26	47

NOTES:
1. MAX WEIGHT DOES NOT INCLUDE (E) CURB.
2. RE-USE EXISTING CURB SMD.

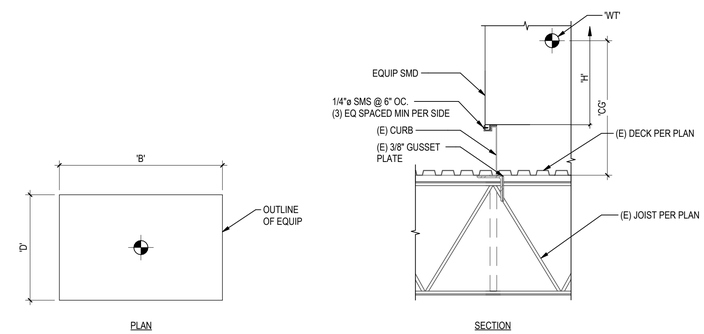

2 S-600 MECH UNIT ANCHORAGE GROUP A

NTS

MODEL #'S	WT (LBS)	B (IN)	D (IN)	H (IN)	CG (IN)
AC 4-1	419	52	45	46	73
RTU 5-4	389	48.8	41.3	35.4	80.3
RTU 6-1	474	58.6	44.3	39.4	94
HP 6-1	389	52	45	46	73
AC 6-1	419	52	45	46	73
RTU 5-5	389	52	45	46	73

NOTES:
1. MAX WEIGHT INCLUDES EQUIPMENT WT & CURB ADAPTER ONLY.
2. RE-USE EXISTING CURB SMD.

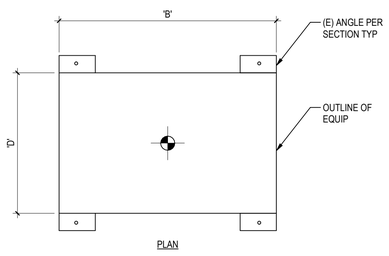

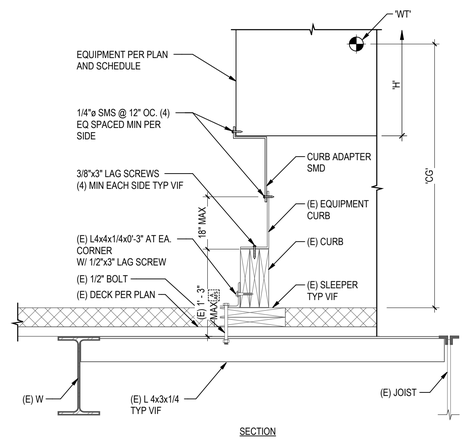

8 S-600 MECH UNIT ANCHORAGE GROUP F

NTS

MODEL #'S	WT (LBS)	B (IN)	D (IN)	H (IN)	CG (IN)
RTU 4-1	2106	52	45	46	119
RTU 4-2	968	88.08	53.28	50.88	87
RTU 4-3	1020	88.08	53.28	50.88	87
RTU 4-4	1020	88.08	53.28	50.88	87
RTU 5-1, 5-2	1924	123	87	59.04	94
RTU 5-3	1924	123	87	59.04	94

NOTES:
1. MAX WEIGHT INCLUDES EQUIPMENT WT & CURB ADAPTER ONLY.
2. RE-USE EXISTING CURB SMD.

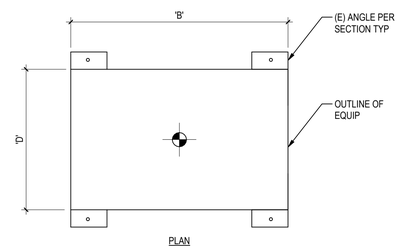

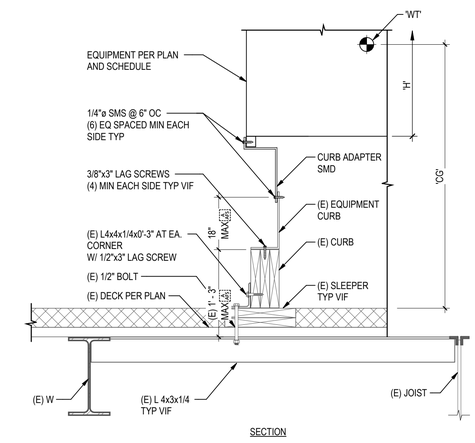

6 S-600 MECH UNIT ANCHORAGE GROUP E

NTS

MODEL #'S	WT (LBS)	B (IN)	D (IN)	H (IN)	CG (IN)
MAU 5-1	3129	186	91	60	85.5
MAU 5-2,5-5	2158	165.5	78	51	68.5
MAU 5-3,5-4	2158	165.5	78	51	68.5
MAU 5-6	3134	186	91	60	86.5
MAU 5-7	1407	140	52	39	68.5
MAU 5-8	1377	140	52	39	68.5

NOTES:
1. MAX WEIGHT INCLUDES EQUIPMENT WT & CURB ADAPTER ONLY.
2. RE-USE EXISTING CURB SMD.

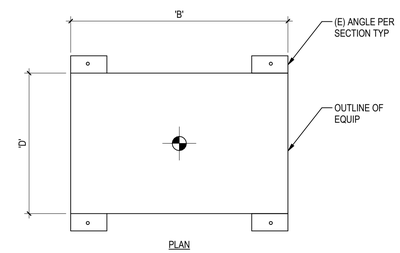

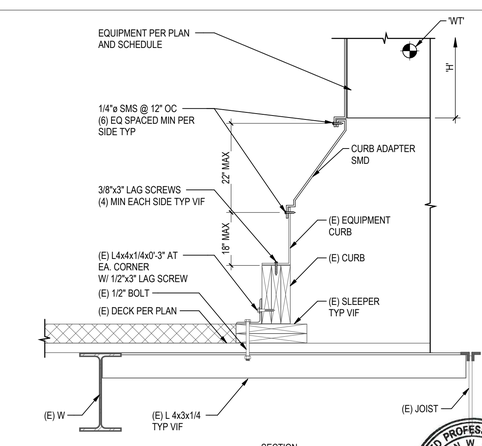

10 S-600 MECH UNIT ANCHORAGE GROUP D

NTS

REGISTERED PROFESSIONAL ENGINEER ALAN W. DYCK 5470 EXP. 09-30-24 STRUCTURAL STATE OF CALIFORNIA
03-22-24

IFB 4-2550 EXHIBIT B

Stantec
801 S. Figueroa Street, Suite 300
Los Angeles, CA 90017

Copyright Reserved
The Contractor shall verify and be responsible for all dimensions. DO NOT scale the drawing - any errors or omissions shall be reported to Stantec without delay.
This drawing is the property of Stantec and must not be reproduced or used for any purpose other than that authorized by Stantec in writing before hand. Reproduction or use for any purpose other than that authorized by Stantec is forbidden.

REVISION	DESCRIPTION	DATE
5/13/2024	100% RESUBMITTAL	
03/27/2024	100% CONSTRUCTION DRAWING SUBMITTAL	
02/13/2024	UPDATED 90% CONSTRUCTION DRAWING SUBMITTAL	
12/07/2023	90% CONSTRUCTION DRAWING SUBMITTAL	

REPLACEMENT OF MECHANICAL UNITS AT SANTA ANA BUS BASE

4301 W. MAC ARTHUR BLVD., SANTA ANA, CA

ANCHORAGE SCHEDULES

JOB #:	
DESIGN BY:	IS
DRAWN BY:	DK
CHECKED BY:	MP
DATE:	12/07/2023
SCALE:	As indicated
SHEET:	S-600D

OCTA

ORANGE COUNTY TRANSPORTATION AUTHORITY
550 SOUTH MAIN STREET, ORANGE, CA

Autodesk Docs://2014233703_Santa_Ana_Bus/stn_struc_2014233703_Santa_Ana_Bus_OCTA_CTO-3_Mech_Units.rvt

3/22/2024 10:38:18 AM

IFB 4-2550 EXHIBIT B

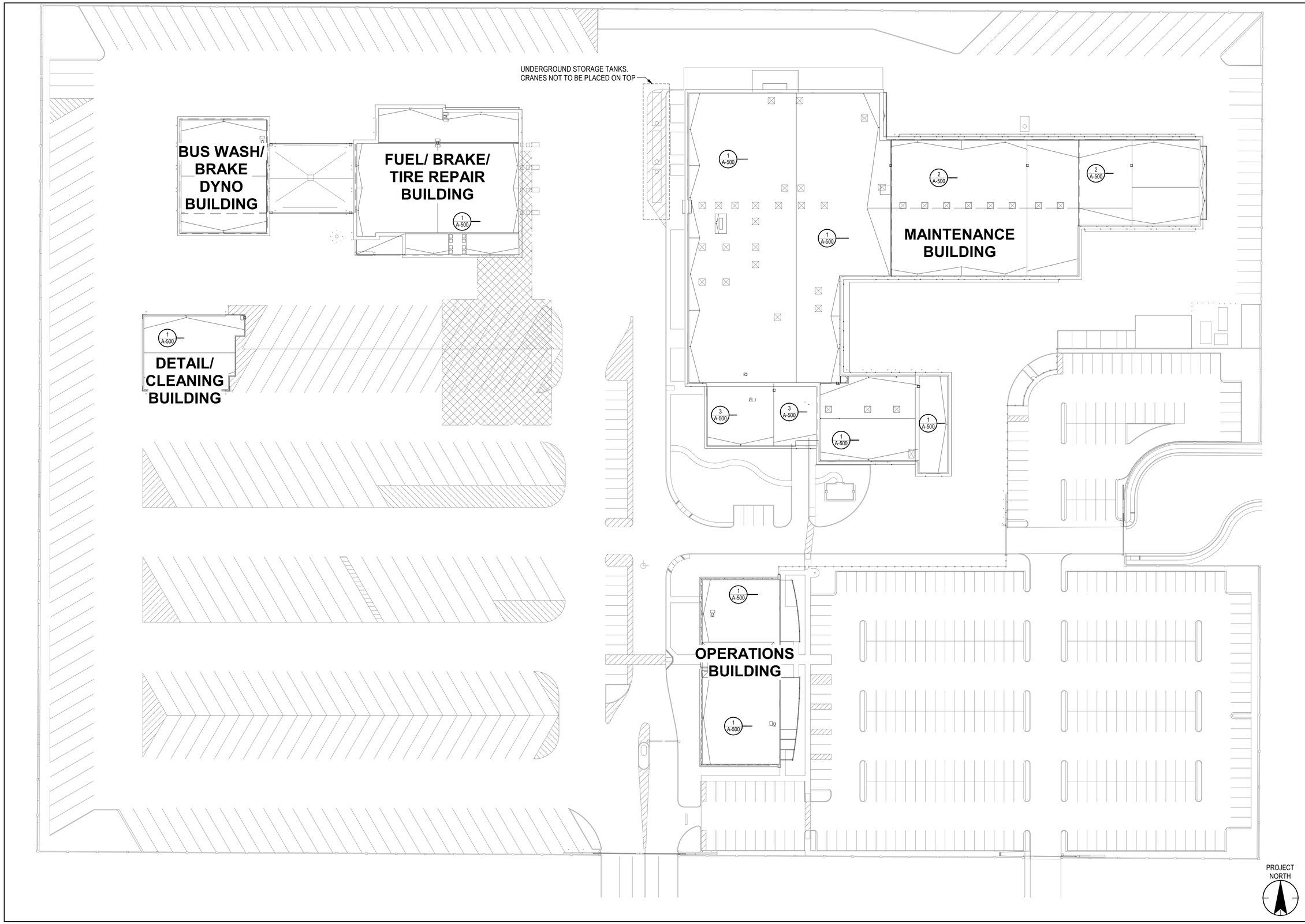

Stantec

801 S. Figueroa Street, Suite 300
Los Angeles, CA 90017

Copyright Reserved
The Contractor shall verify and be responsible for all dimensions. DO NOT scale the drawing - any errors or omissions shall be reported to Stantec without delay.
The Copyright in the above work is the property of Stantec. Reproduction or use for any purpose other than that authorized by Stantec is forbidden.

REVISION	DESCRIPTION	DATE
3	100% CONSTRUCTION DRAWING SUBMITTAL	03/18/2024
2	90% UPDATED CONSTRUCTION SUBMITTAL	02/13/2024
1	90% CONSTRUCTION DRAWING SUBMITTAL	12/07/2023

REPLACEMENT OF MECHANICAL UNITS AT SANTA ANA BUS BASE
4301 W MacArthur Blvd, Santa Ana, CA 92704

ARCHITECTURAL SITE PLAN

JOB #:	
DESIGN BY:	Designer
DRAWN BY:	Author
CHECKED BY:	Checker
DATE:	
SCALE:	1" = 40'-0"
SHEET:	A-100D

OCTA

ORANGE COUNTY TRANSPORTATION AUTHORITY
550 SOUTH MAIN STREET, ORANGE, CA

Autodesk Docs://2014233703_Santa_Ana_Bus/arch_2014233703-Revit22.rvt

5/9/2024 10:14:26 AM

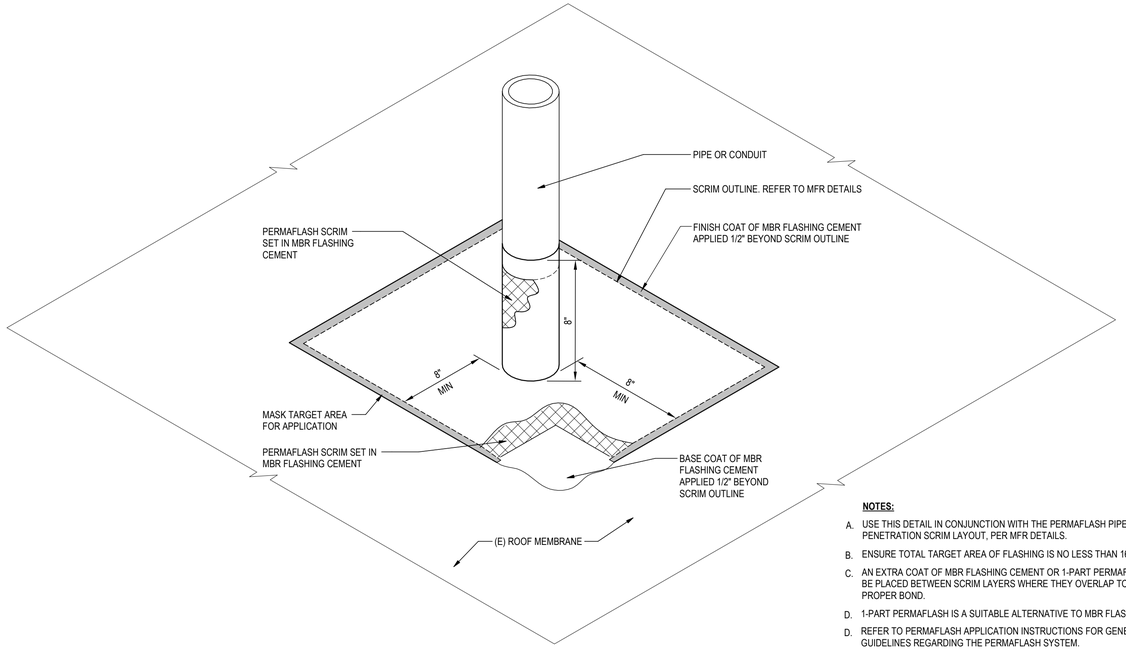

NOTES:

A. USE THIS DETAIL IN CONJUNCTION WITH THE PERMAFLASH PIPE PENETRATION SCRIM LAYOUT, PER MFR DETAILS.

B. ENSURE TOTAL TARGET AREA OF FLASHING IS NO LESS THAN 16" x 16".

C. AN EXTRA COAT OF MBR FLASHING CEMENT OR 1-PART PERMAFLASH MUST BE PLACED BETWEEN SCRIM LAYERS WHERE THEY OVERLAP TO ENSURE A PROPER BOND.

D. 1-PART PERMAFLASH IS A SUITABLE ALTERNATIVE TO MBR FLASHING CEMENT.

D. REFER TO PERMAFLASH APPLICATION INSTRUCTIONS FOR GENERAL GUIDELINES REGARDING THE PERMAFLASH SYSTEM.

E. AFTER THE PERMAFLASH HAS CURED OR GRANULES BROADCAST INTO THE WET CEMENT AN ADDITIONAL SURFACING OF JM COATING TO BE APPLIED.

5 A-500 PIPE/ CONDUIT PENETRATION @ ROOF TYPE 1 & 3

1 1/2" = 1'-0"

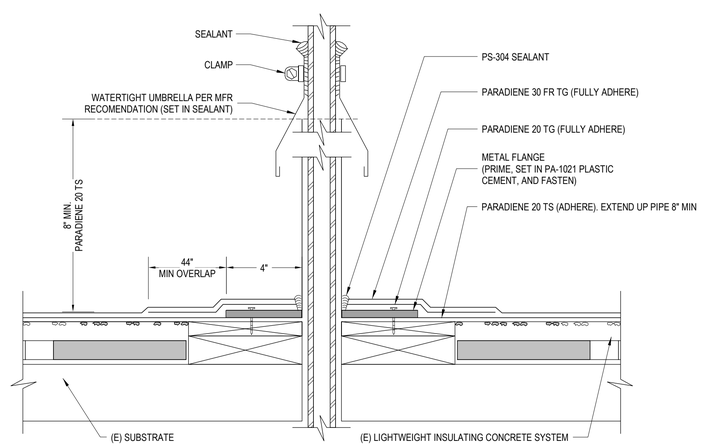

6 A-500 PIPE/ CONDUIT PENETRATION @ ROOF TYPE 2

3" = 1'-0"

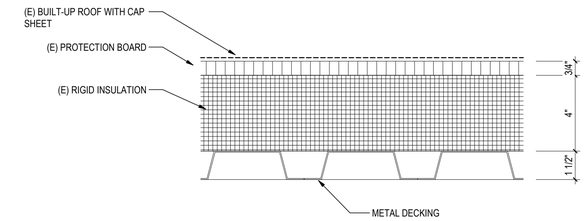

1 A-500 ROOF TYPE 1

3" = 1'-0"

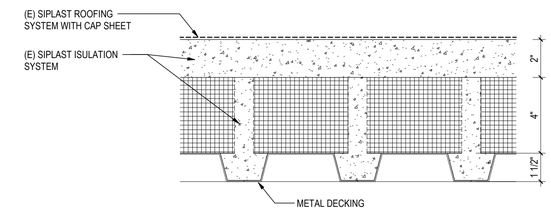

2 A-500 ROOF TYPE 2

3" = 1'-0"

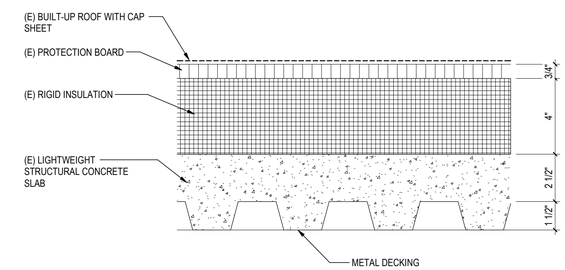

3 A-500 ROOF TYPE 3

3" = 1'-0"

Stantec
801 S. Figueroa Street, Suite 300
Los Angeles, CA 90017

Copyright Reserved
The Contractor shall verify and be responsible for all dimensions. DO NOT scale the drawing; any errors or omissions shall be reported to Stantec without delay.
The Copyright to all designs and drawings are the property of Stantec. Reproduction or use for any purpose other than that authorized by Stantec is forbidden.

REVISION	DESCRIPTION	DATE
3	100% CONSTRUCTION DRAWING SUBMITTAL	03/18/2024
2	90% UPDATED CONSTRUCTION SUBMITTAL	02/13/2024
1	90% CONSTRUCTION DRAWING SUBMITTAL	12/07/2023

REPLACEMENT OF MECHANICAL UNITS AT SANTA ANA BUS BASE
4301 W MacArthur Blvd, Santa Ana, CA 92704

DETAILS

JOB #:
DESIGN BY: Designer
DRAWN BY: Author
CHECKED BY: Checker
DATE:
SCALE: As indicated
SHEET: A-500D

OCTA
ORANGE COUNTY TRANSPORTATION AUTHORITY
550 SOUTH MAIN STREET, ORANGE, CA

Autodesk Docs://2014233703_Santa_Ana_Bus/arch_2014233703-Revit22.rvt
5/9/2024 10:14:26 AM

(HVAC)

*NOTE: ALL DUCT SIZES ARE INTERIOR, FREE DIMENSIONS ALWAYS WIDTH (HORIZONTAL DIM.) x HEIGHT (VERTICAL DIM.)

Symbol	Description
	AIR FLOW ARROW
18"x12" / 18"x12"	RECTANGULAR DUCT AND SIZE*
18"ø / 18"ø	ROUND DUCT AND SIZE*
18"x12"ø / 18"x12"ø	FLAT OVAL DUCT AND SIZE*
18"x12"	EXTERIOR DUCT TREATMENT*
18"x12" / 18"x12"	RECTANGULAR DUCT WITH ACOUSTIC LINING*
30"x12"	DUCT SECTION, SUPPLY AIR. APPLIES TO RECT., ROUND AND OVAL
	DUCT SECTION, OUTSIDE AIR. APPLIES TO RECT., ROUND AND OVAL
	DUCT SECTION, RETURN AIR. APPLIES TO RECT., ROUND AND OVAL
	DUCT SECTION, EXHAUST AIR. APPLIES TO RECT., ROUND AND OVAL
	FLEXIBLE DUCT
	ELBOW TURN, SUPPLY DOWN. APPLIES TO RECT., ROUND AND OVAL
	DUCT SECTION, OUTSIDE AIR. APPLIES TO RECT., ROUND AND OVAL
	DUCT SECTION, OUTSIDE AIR. APPLIES TO RECT., ROUND AND OVAL
	DUCT SECTION, OUTSIDE AIR. APPLIES TO RECT., ROUND AND OVAL
UP	CHANGE IN DUCT ELEVATION RISING IN DIRECTION INDICATED
DN	CHANGE IN DUCT ELEVATION DROPPING IN DIRECTION INDICATED
	END CAP
	ELBOW, RECTANGULAR, SMOOTH RADIUS WITH SPLITTER VANES (0.25 R/W DEFAULT)
	ELBOW, RECTANGULAR, SMOOTH RADIUS WITHOUT VANES (1.5 R/W DEFAULT)
	ELBOW, ROUND, SMOOTH RADIUS (1.5 R/W DEFAULT)
	MITERED ELBOW, RECTANGULAR, WITHOUT VANES
	MITERED ELBOW, RECTANGULAR, WITH TURNING VANES
	RECTANGULAR TO ROUND TRANSITION
	DUCT ACCESS DOOR (TOP, SIDE, BOTTOM)
	FLEXIBLE CONNECTION
BDD	BACKDRAFT DAMPER
COD	CABLE OPERATED DAMPER
	MANUAL DAMPER
M	MOTORIZED DAMPER
CAR	PRESSURE INDEPENDENT REGULATOR
	FIRE DAMPER
	SMOKE DAMPER
	SMOKE AND FIRE DAMPER
	DUCT SILENCER/TRANSFER ELBOW
T	CONTROL DEVICE (REFER TO CONTROLS LEGEND)
	AIR FLOW MEASURING STATION (REFER TO CONTROLS LEGEND)
QUANTITY / TYPE / SIZE (IN.) / VOLUME (CFM)	AIR OUTLET OR INLET TAG)REFER TO SCHEDULE)
	RECTANGULAR DIFFUSER, SUPPLY. OPTIONAL ARROWS SHOW THE FLOW DIRECTION.
	RECTANGULAR REGISTER OR GRILLE, RETURN
	RECTANGULAR REGISTER OR GRILLE, EXHAUST
	ROUND DIFFUSER, SUPPLY
	LINEAR DIFFUSER
	SIDEWALL REGISTER OR GRILLE, SUPPLY
	SIDEWALL GRILLE, RETURN OR EXHAUST
UC	UNDERCUT DOOR
	DOOR GRILLE OR LOUVER
	TRANSFER GRILLE OR LOUVER
	COIL (REFER TO CONTROLS LEGEND)
QUANTITY / TYPE / LENGTH (FT.) / CAPACITY (MBH)	RADIATION HEATING TAG (REFER TO SCHEDULE)

NOTE: NOT ALL SYMBOLS, SYSTEMS, AND ABBREVIATIONS MAY BE USED ON THIS PROJECT

(HVAC)

- EXHAUST FAN
- SUPPLY FAN
- EXHAUST FAN
- ROOFTOP UNIT
- MAKEUP AIR UNIT
- PACKAGED AIR CONDITIONER
- PACKAGED HEAT PUMP

WORK DEFINITION

- NEW WORK (N)
- EXISTING (E)
- REMOVE EXISTING (D)
- ### KEY NOTE
- ### EQUIPMENT IDENTIFICATION
- CONNECTION TO EXISTING
- DISCONNECT (CUT AND CAP)
- POINT OF DEMOLITION

ABBREVIATIONS

A/C	AIR CONDITIONING UNIT
AAV	AUTOMATIC AIR VENT
ADA	AMERICANS WITH DISABILITIES ACT
ADJ	ADJUSTABLE
AFC	ABOVE FINISHED CEILING
AFF	ABOVE FINISHED FLOOR
AFG	ABOVE FINISHED GRADE
AFR	ABOVE FINISH ROOF
AHJ	AUTHORITY HAVING JURISDICTION
AP	ACCESS PANEL
APD	AIR PRESSURE DROP
AVG	AVERGAGE
BAS	BUILDING AUTOMATION SYSTEM
BDD	BACKDRAFT DAMPER
BHP	BRAKE HORSEPOWER
BMS	BUILDING MANAGEMENT SYSTEM
BOD	BOTTOM OF DUCT
BOP	BOTTOM OF PIPE
BTU	BRITISH THERMAL UNIT
BTUH	BRITISH THERMAL UNIT PER HOUR
C/W	COMPLETE WITH
CAV	CONSTANT AIR VOLUME
CBV	CIRCUIT BALANCING VALVE
CFM	CUBIC FEET PER MINUTE
DB	DRY BULB TEMEPRATURE
dB	DECIBEL(S)
dBA	A-WEIGHTED DECIBLES
DDC	DIRECT DIGITAL CONTROL
DEG	DEGREE
DIA./Ø	DIAMETER
DIFF	DIFFERENTIAL
DIV	DIVISION
DN	DOWN
DWG	DRAWING
EA	EXHAUST AIR
EA (D)	EXHAUST AIR, DISHWASH
EA (G)	EXHAUST AIR, GENERAL
EA (K)	EXHAUST AIR, KITCHEN
EA (LAB)	EXHAUST AIR, LABORATORY
EA (LD)	EXHAUST AIR, LAUNDRY/DRYER
EA (W)	EXHAUST AIR, WASHROOM
EAT	ENTERING AIR TEMPERATURE
EAV	EXHAUST AIR VALVE
ECM	ELECTRONICALLY COMMUNICATED MOTOR
ED	EXISTING TO BE DEMOLISHED (DEMOLITION PLANS)
EER	ENERGY EFFICIENCY RATIO
EG	ETHELYENE GLYCOL
EMCS	ENERGY MANAGMENT CONTROL SYSTEM
ER	EXISTING RELOCATED (NEW CONSTRUCTION PLANS)
ERL	EXISTING TO BE RELOCATED (DEMOLITION PLANS)
ESP	EXTERNAL STATIC PRESSURE
EWT	ENTERING WATER TEMPERATURE
EXIST / E	EXISTING (DEMOLITION PLANS)
FC	FAIL CLOSED
FLA	FULL LOAD AMPERAGE
FO	FAIL OPEN
FP	FIRE PROTECTION
FPM	FEET PER MINUTE
FPS	FEET PER SECOND
FT	FOOT/FEET
GA	GAUGE
GAL	GALLON (US)
GC	GENERAL CONTRACTOR
GEO	GEODETIC
GPM	GALLONS PER MINUTE
HEPA	HIGH EFFICIENCY PARTICULATE AIR (FILTER)
HP	HORSEPOWER
HR	HOUR
HVAC	HEATING / VENTILATING / AIR CONDITIONING
HZ	HERTZ
IE	INVERT ELEVATION
IEER	INTEGRATED ENERGY EFFECIENCY RATIO
IN	INCHES
IN WG	INCHES WATER GAUGE
IPLV	INTEGRATED PART LOAD VALUE
kW	KILOWATT
kWh	KILOWATT HOUR
LAT	LEAVING AIR TEMPERATURE
LBS	POUNDS
LF	LINEAR FEET
LWT	LEAVING WATER TEMPERATURE
M	METER
MAX	MAXIMUM
MBH	THOUSAND OF BTUH
MCA	MINIMUM CIRCUIT AMPS
MERV	MINIMUM EFFECIENCY REPORTING VALUES
MFR	MANUFACTURER
MIN	MINIMUM
MOP	MAXIMUM OVERCURRENT PROTECTION
MWT	MEAN WATER TEMPERATURE
N/A	NOT APPLICABLE
NC	NOISE CRITERIA
NC	NORMALLY CLOSED
NIC	NOT IN CONTRACT
NO	NORMALLY OPEN
NPS	NOMINAL PIPE SIZE
NTS	NOT TO SCALE
OA	OUTSIDE AIR
OFCI	OWNER FURNISHED, CONTRACTOR INSTALLED
OFE	OWNER FURNISHED EQUIPMENT
OFOI	OWNER FURNISHED / OWNER INSTALLED
PG	PROPYLENE GLYCOL
POE	POINT OF ENTRANCE
POS	POINT OF SERVICE
PPM	PARTS PER MILLION
PSI	POUNDS PER SQUARE INCH
PSIA	POUNDS PER SQUARE INCH, ABSOLUTE
PSIG	POUNDS PER SQUARE INCH, GAGE
PTS	PNEUMATIC TUBE STATION

ABBREVIATIONS

PVC	POLYVINYL CHLORIDE
RA	RETURN AIR
RELA	RELIEF AIR
REQD	REQUIRED
RH	RELATIVE HUMIDITY
RPM	REVOLUTIONS PER MINUTE
SA	SUPPLY AIR
SEER	SEASONAL ENERGY EFFICIENCY RATION
SP	STATIC PRESSURE
SP	STAIR PRESSURIZATION AIR (*)
SRV	SAFETY RELIEF VALVE
TA	TRANSFER AIR
TEMP	TEMPERATURE
TSP	TOTAL STATIC PRESSURE
TSTAT	THERMOSTAT
TYP	TYPICAL
UC	UNDER CUT (DOOR)
UG	UNDERGROUND
UP	UP
VAV	VARIABLE AIR VOLUME
VFD	VARIABLE FREQUENCY DRIVE
VIF	VERIFY IN FIELD
VTR	VENT-THRU-ROOF
W/	WITH
W/O	WITHOUT
WB	WET BULB TEMPERATURE
WG	WATER GAUGE
ZN-#	ZONE
°C	CELSIUS
°F	FAHRENHEIT

EQUIPMENT IDENTIFICATION

AB-#	AIR BLENDER
AC-#	AIR COMPRESSOR
ACU-#	AIR CONDITIONING UNIT
ADS-#	AIR AND DIRT SEPARATOR
AF-#	AIR FILTER
AHU-#	AIR HANDLING UNIT
AS-#	AIR SEPARATOR
ATU-#	AIR TERMINAL UNIT
B-#	BOILER
BCU-#	BLOWER COIL UNIT
BT-#	BATH TUB
CB-#	CHILLED BEAM
CC-#	COOLING COIL
CH-#	CHILLER
CONV-#	CONVECTOR
CRU-#	CONDENSATE RETURN UNIT
CT-#	COOLING TOWER
CU-#	CONDENSING UNIT
CUH-#	CABINET UNIT HEATER
CV-#	CONTROL VALVE
DAC-#	DOOR AIR CURTAIN
DC-#	DUST COLLECTOR
DCT-#	DECONTAMINATION TANK
DCVA-#	DOUBLE CHECK VALVE ASSEMBLY
DF-#	DRINKING FOUNTAIN
DG-#	DOOR GRILLE
DS-#	DUCT SILENCER
DU-#	DEHUMIDIFICATION UNIT
DWH-#	DOMESTIC WATER HEATER
E-#	EXHAUST GRILLE / REGISTER / DIFFUSER
EL-#	EXPANSION LOOP
ERC-#	ENERGY RECOVERY COIL
ERU-#	ENERGY RECOVERY UNIT
ES-#	EMERGENCY SHOWER
ETU-#	EXHAUST TERMINAL UNIT
EWC-#	ELECTRIC WATER COOLER
EWS-#	EYE WASH STATION
F(C)-#	FAN CEILING
F(E)-#	FAN EXHAUST
F(LE)-#	FAN LABORATORY EXHAUST
F(R)-#	FAN RETURN
F(S)-#	FAN SUPPLY
F(T)-#	FAN TRANSFER
F-#	FAN
FCU-#	FAN COIL UNIT
FD-#	FLOOR DRAIN
FFU-#	FAN FILTER UNIT
FPP-#	FIRE PROTECTION PUMP
FPTU-#	FAN POWERED TERMINAL UNIT
FTR-#	FINNED TUBE RADIATOR
FUR-#	FURNACE
GFS-#	GLYCOL FEED SYSTEM
GSG-#	GAS-FIRED STEAM GENERATOR(*)
H(C)-#	HOOD (CANOPY)
H(HC)-#	HOOD (HEAT AND CONDENSATE)
H(I)-#	HOOD (INTAKE)
H(K)-#	HOOD (KITCHEN)
H(R)-#	HOOD (RELIEF)
H(RH)-#	HOOD (RANGE)
H-#	HUMIDIFIER
HC-#	HEATING COIL
HP-#	HEAT PUMP
HRU-#	HEAT RECOVERY UNIT
HT-#	HYDROPNEUMATIC TANK
HX-#	HEAT EXCHANGER
LATU-#	LAB AIR TERMINAL UNIT
LAV-#	LAVATORY
MAC-#	MEDICAL AIR COMPRESSOR
MAU-#	MAKEUP AIR UNIT
MD-#	MOTORIZED DAMPER
MSK-#	MOP SINK
MV-#	MIXING VALVE
MVP-#	MEDICAL VACUUM PUMP
P-#	PUMP
PDU-#	POOL DEHUMIDIFICATION UNIT
PRV-#	PRESSURE REDUCING VALVE
PTAC-#	PACKAGED TERMINAL AIR CONDITIONER
R-#	RETURN AIR GRILLE / REGISTER / DIFFUSER
RD-#	ROOF DRAIN
RH-#	RANGE HOOD
RP-#	RADIANT PANEL
RPBP-#	REDUCED PRESSURE BACKFLOW PREVENTER
RTU-#	ROOFTOP UNIT
S-#	SUPPLY GRILLE / REGISTER / DIFFUSER
SH-#	SHOWER
SK-#	SINK
SPC-#	SOLAR PANEL COLLECTOR
SSF-#	SIDE STREAM FILTER
T(B)-#	TANK (BUFFER TANK)
T(E)-#	TANK (EXPANSION TANK)
T(H)-#	TANK (HYDRO PNEUMATIC TANK)
T(S)-#	TANK (STORAGE TANK)
T-#	TRANSFER AIR GRILLE
UH-#	UNIT HEATER
UR-#	URINAL
USG-#	UNFIRED STEAM GENERATOR
UV-#	UNIT VENTILATOR
VA-#	VALVE
VFD-#	VARIABLE FREQUENCY DRIVE
WC-#	WATER CLOSET
WS-#	WATER SOFTENER
L-#	LOUVER

LICENSED PROFESSIONAL ENGINEER SEVAK GALSTYAN M 39730 EXP. 12/31/25 MECHANICAL STATE OF CALIFORNIA

Stantec
801 S. Figueroa Street, Suite 300
Los Angeles, CA 90017

Copyright Reserved
The Contractor shall verify and be responsible for all dimensions. DO NOT scale the drawing - any errors or omissions shall be reported to Stantec without delay.
The Copyrights to all designs and drawings are the property of Stantec. Reproduction or use for any purpose other than that authorized by Stantec is forbidden.

REVISION	DESCRIPTION	DATE
	100% RESUBMITTAL	5/13/2024
	100% CONSTRUCTION DRAWING SUBMITTAL	3/27/2024
	90% UPDATED CONSTRUCTION SUBMITTAL	2/13/2024
	90% CONSTRUCTION DRAWING SUBMITTAL	12/07/2023

REPLACEMENT OF MECHANICAL UNITS AT SANTA ANA BUS BASE
4301 W. MAC ARTHUR BLVD., SANTA ANA, CA

MECHANICAL GENERAL NOTES, SYMBOLS AND ANNOTATIONS

JOB #:
DESIGN BY: SG
DRAWN BY: RW
CHECKED BY: GY
DATE:
SCALE: 12" = 1'-0"
SHEET: M-001 D

OCTA
ORANGE COUNTY TRANSPORTATION AUTHORITY
550 SOUTH MAIN STREET, ORANGE, CA

DEMO NOTES

1. NOT ALL EXISTING CONDITIONS HAVE BEEN SHOWN. CONTRACTOR TO FIELD VERIFY ALL EXISTING CONDITIONS PRIOR TO DEMO.
2. CONTRACTOR SHALL PROTECT ALL WORK AND EXISTING CONDITIONS ASSOCIATED WITH THIS CONTRACT FROM DAMAGE, COVER ENDS OF PIPING AND DUCTWORK NOT ACTIVELY BEING WORKED ON. IT IS THE CONTRACTOR RESPONSIBILITY TO REPAIR OR REPLACE ANY DAMAGED ITEMS THAT OCCURS DURING THIS CONSTRUCTION PROJECT AT NO COST TO THE OWNER.
3. REPLACE ALL REQUIRED EQUIPMENT, PIPING, HANGERS, CONTROLS AND ALL ASSOCIATED EXISTING SYSTEMS AS REQUIRED. TO REPLACE EACH SYSTEM, CONTRACTOR SHALL COORDINATE DEMOLITION WITH EXISTING SYSTEMS AND COMPONENTS TO REMAIN PRIOR TO WORK COMMENCING. EXISTING DUCTWORK IS TO REMAIN.
4. IT IS THE CONTRACTORS RESPONSIBILITY TO CLEAN UP ALL DEBRIS FROM SITE AT THE END OF EACH WORK DAY AND DISPOSE OFF EITHER IN LAY DOWN RECYCLE BINS PROVIDED BY THE CONTRACTOR OR OFFSITE ALL TOGETHER.
5. ALL DEMOLISHED EQUIPMENT SHALL BE TURNED OVER TO THE OWNER UNLESS DIRECTED OTHERWISE. IF OWNER IS NOT TO KEEP DEMOLISHED EQUIPMENT, DISPOSE AS REQUIRED.
6. THE CONTRACTOR SHALL VISIT THE SITE AND BE THOROUGHLY FAMILIARIZED WITH THE EXISTING CONDITIONS PRIOR TO BIDDING. INFORMATION GIVEN ON THESE DRAWINGS ABOUT THE EXISTING INSTALLATION HAS BEEN OBTAINED FROM THE EISTING AS-BUILT DRAWINGS BUT CANNOT BE GUARANTEED ACCURATE IN ALL RESPECTS. VERIFY ALL SUCH INFORMATION BEFORE PROCEEDING WITH ANY NEW WORK THAT MAY BE AFFECTED. INCLUDE AS PART OF THE CONTRACT AL WORK REQUIRED TO PRODUCE THE INDICATED RESULT.
7. UPON SUBMITTING A BID THE CONTRACTOR SHALL BE HELD TO HAVE MADE SUCH EXAMINATIONS OF THE SITE AND NO ALLOWANCE FOR EXTRAS WILL BE ALLOWED FOR ANY ERROR OR OVERSIGHT RESULTING FROM THE CONTRACTORS UNFAMILIARITY WITH THE SITE OR EXISTING CONDITIONS.
8. CONTRACTOR SHALL NOT SCALE DRAWINGS. DIMENSIONS MISSING FROM PLANS OR NEEDED FOR EXECUTION OF WORK SHALL BE CLARIFIED OR PROVIDED BY THE FACILITY REPRESENTATIVE BEFORE WORK IS INSTALLED.
9. INTERRUPTION OF EXISTING SERVICES: THE CONTRACTOR'S ATTENTION IS CALLED TO THE PRESENCE OF EXISTING, CONDUIT, PIPING, ETC. THE CONTRACTOR WILL BE HELD RESPONSIBLE FOR THE PROPER AND APPROVED REPAIR OF ANY AND ALL DAMAGE CAUSED BY HIM OR HIS WORK TO EXISTING BUILDING. ANY INTERRUPTIONS REQUIRED SHALL BE SCHEDULED TO MINIMIZE INCONVENIENCE TO THE FACILITY, AND AT TIMES AS APPROVED IN ADVANCE BY THE FACILITY REPRESENTATIVE. NEW WORK AND ISNTALLATIONS SHALL BOT IMPAIR THE PROPER FUNCTIONING OF THE EXISTING FACILITY. THE COMPLETED PROJECT SHALL BE A PROPERLY FUNCTIONING ENTITY THROUGHOUT. FURNISH ALL LABOR AND MATERIALS REQUIRED TO RELOCATE, REMOVE, REINSTALL, RECONNECT REPLACE, ETC. ANY EXISTING PIPING TO ACCOMMODATE THE WORK. CONTRACTOR SHOULD CONSIDER IN HIS BID ANY EXTRA WORK REQUIRED TO MINIMIZE SHUTDOWN TIME.
10. BEFORE DEMOLITION COMMENCES ON SITE, ALL EXISTING EQUIPMENT TO BE RETAINED AND REUSED WILL BE SURVEYED AND VALIDATED BY THE CONTRACTOR TO ESTABLISH CONDITION AND CAPACITIES. ANY EXISTING DAMAGE TO EQUIPMENT IS TO BE RECORDED AT THIS STAGE BY THE CONTRACTOR AND A FULL WRITTEN REPORT SUBMITED TO THE FACILITY REPRESENTATIVE FOR REVIEW. THE REPORT WILL INCLUDE PHOTOGRAPHIC EVIDENCE OF DAMAGE.
11. CONTRACTOR TO CROSS REFERENCE DEMOLITION AND NEW CONSTRUCTION DRAWINGS TO ENSURE CONSISTENCY IN DESIGN INTENT BEFORE PROCEEDING WITH ANY DEMOLITION WORK. ANY PIPE, VALVE, EQUIPMENT THAT IS MISTAKENLY DEMOLISHED SHALL BE RESTORED AT CONTRACTORS COST.
12. ALL POWER SUPPLIES TO EXISTING EQUIPMENT TO BE REMOVED SHALL BE ISOLATED AND MADE SAFE PER NEX PRIOR TO DEMOLITION STARTS. THIS PROCESS SHALL BE COORDINATED WITH FACILITY REPRESENTATIVES.
13. CONTRACTOR TO DO PRE-DEMOLITION SURVEY AND RED TAG UTILITIES FOR DEMOLITION. COORDIANTE WITH FACILITY REPRESENTATIVE ALL PROPOSED UTILITY SHUT DOWN AND ISOLATION PRIOR TO DEMOLITION.

APPLICABLE CODES AND DESIGN CONDITIONS

1. AMERICANS WITH DISABILITIES ACT (ADA).
2. NFPA 90A; STANDARD FOR THE INSTALLATION OF AIR-CONDITIONING AND VENTILATING SYSTEMS.
3. NFPA 90B: STANDARD FOR THE INSTALLATION OF WARM AIR HEATING AND AIR-CONDITIONING SYSTEMS.
4. NFPA 101: LIFE SAFETY CODE
5. ASHRAE 55 THERMAL ENVIRONMENTAL CONDITIONS FOR HUMAN OCCUPANCY.
6. ASHRAE 62.1 VENTILATION FOR ACCEPTABLE INDOOR AIR QUALITY.
8. 2022 CALIFORNIA MECHANICAL CODE
9. 2022 CALIFORNIA PLUMBING CODE
10. 2022 NATIONAL ELECTRICAL CODE
11. 2022 TITLE 24 REQUIREMENTS
12. CALGREEN STANDARDS

OUTDOOR DESIGN CONDITIONS:

LOCATION:
SUMMER: 98DB, 70WB
WINTER: 35DB
ELEVATION: 115 FEET

GENERAL NOTES

1. THE MECHANICAL PLANS ARE DIAGRAMMATIC IN NATURE AND ARE BASED ON ONE MANUFACTURER'S EQUIPMENT. THEY ARE NOT INTENDED TO SHOW EVERY ITEM IN ITS EXACT LOCATION. THE EXACT DIMENSIONS, OR ALL OF THE DETAILS FOR THE EQUIPMENT. THE MECHANICAL CONTRACTOR SHALL VERIFY THE ACTUAL DIMENSIONS OF THE EQUIPMENT AND ENSURE THAT IT WILL FIT IN THE AVAILABLE SPACE.
2. MECHANICAL CONTRACTOR RESPONSIBLE FOR INSTALLATION OF COMPLETED AND OPERATIONAL SYSTEMS WITH DUE RESPECT TO ALL APPLICABLE CODES AND AUTHORITIES HAVING JURISDICTION.
3. IT IS THE CONTRACTOR RESPONSIBILITY TO FIELD VERIFY ALL CONNECTION POINTS PRIOR TO INSTALL. NOT ALL CONNECTION SIZES ARE SHOWN, BUT THOSE THAT ARE APPROXIMATE AND TAKEN FROM EXISTING AS-BUILTS AND FIELD OBSERVATIONS.
4. COORDINATE PIPE ROUTING WITH DUCTWORK, SPRINKLER PIPING AND ELECTRICAL POWER/LIGHTING CIRCUITING AND STRUCTURAL MEMBERS PRIOR TO INSTALLATION.
5. CONTRACTORS TO VERIFY ALL GRADES, DIMENSIONS AND EXISTING CONDITIONS AT THE SITE BEFORE PROCEEDING WITH WORK. NOTIFY PRIME CONSULTANT OF ANY DISCREPANCIES BETWEEN DRAWINGS AND ACTUAL CONDITIONS BEFORE INSTALLATION.
6. ALL MECHANICAL EQUIPMENT CONTROLS SHALL MATCH TO WHAT IS EXISTING AT THE OCTA SANTA ANA BUS FACILITY.
7. COORDINATE INSTALLATION OF PIPING AND DUCTWORK WITH ELECTRICAL CONTRACTOR AND OTHER TRADES.
8. IF THERE IS A CONFLICT BETWEEN THE CONSTRUCTION DOCUMENTS AND SPECIFICATIONS, THE MOST STRINGENT WILL APPLY.
9. ALL EQUIPMENT SHALL BE INSTALLED IN STRICT ACCORDANCE WITH THE EQUIPMENT MANUFACTURERS. CONTRACTOR TO PROVIDE ALL FITTINGS, TRANSITIONS, DAMPERS, VALVES, AND OTHER DEVICES REQUIRED FOR A COMPLETE WORKABLE INSTALLATION.
10. PENETRATIONS OF DUCTS, PIPES, CONDUITS,ETC IN WALLS REQUIRING PROTECTED OPENINGS SHALL BE FIRE STOPPED, FIRE STOP MATERIAL, SHALL BE A UL/ULC-LISTED ASSEMBLY APPROPRIATE FOR FIRE OR SMOKE PENETRATIONS AS APPLICABLE AND AS APPROVED BY THE FIRE MARSHAL.
11. THE MECHANICAL CONTRACTOR SHALL PROVIDE AND INSTALL FIRE, SMOKE, OR COMBINATION SMOKE/FIRE DAMPERS AND ACCESS PANELS COMMENSURATE WITH THE RATING OF THE WALL IN ALL DUCTWORK THAT PENETRATES FIRE WALLS, FIRE BARRIERS, FIRE PARTITIONS, SMOKE BARRIERS AND SMOKE PARTITION IN ALL DUCTWORK THAT PENETRATES A HORIZONTAL OR VERTICAL FIRE PARTITION, OR AS OTHERWISE SHOWN ON THE DRAWINGS.
12. ALL BRANCH DUCTS SHALL HAVE VOLUME DAMPERS.
13. WHERE FLOW EXCEEDS 150 CFM, THE CONTRACTOR SHALL USE SMOOTH RADIUS ELBOWS OR TURNING VANES.
14. ALL DUCT JOINTS SHALL BE SEALED IN ACCORDANCE WITH SMACNA STANDARDS.
15. ALL DUCT DIMENSIONS ARE NET INSIDE VALUES. DIMENSIONS MAY BE CHANGED PROVIDED THAT THE NET FREE AREA IS MAINTAINED.
16. ALL CONCEALED DUCTWORK SHALL BE INSULATED WITH 1" FIBERGLASS INSULATING BLANKET WITH ALUMINUM FOIL FACING.
17. ALL DUCTWORK SHALL BE CONSTRUCTED, ERECTED AND TESTED IN ACCORDANCE WITH THE LOCAL REGULATIONS AND PROCEDURES DETAILED IN THE APPLICABLE STANDARDS ADOPTED BY THE SHEET METAL AND AIR CONDITIONING CONTRACTORS NATIONAL ASSOCIATION. (SMACNA).
18. ALL PIPE SHALL BE SUPPORTED FROM THE BUILDING STRUCTURE IN A NEAT AND WORKMANLIKE MANNER. THE USE OF WIRE OR METAL STRAPS TO SUPPORT PIPES WILL NOT BE PERMITTED. REFER TO SPECIFICATIONS FOR MINUMUM SPACING OF PIPE SUPPORTS.
19. THE HVAC SYSTEMS SHALL BE TESTED AND BALANCED BY AN INDEPENDENT AGENCY, UNDER THE SUPERVISION OF A LICENSED PROFESSIONAL ENGINEER. A SEALED TYPE WRITTEN REPORT SHALL BE SUBMITTED TO THE ARCHITECT/ENGINEER.
20. ALL EQUIPMENT, DUCTS PIPING, AND OTHER DEVICES AND MATERIALS INSTALLED OUTSIDE OF THE BUILDING OR OTHERWISE EXPOSED TO THE WEATHER SHALL BE COMPLETELY WEATHERPROOFED.
21. MECHANICAL EQUIPMENT, DUCTS AND PIPING ARE TO BE COORDINATED WITH STRUCTURAL JOISTS AND CROSS BRACING.
22. ALL EXPOSED PIPING IN OCCUPIED SPACES SUBJECT TO ARCHITECTURAL APPROVAL PRIOR TO INSTALLATION.

LICENSED PROFESSIONAL ENGINEER
SIYAR GALSTYAN
M-39730
EXP. 12/31/25
MECHANICAL
STATE OF CALIFORNIA

Stantec
801 S. Figueroa Street, Suite 300
Los Angeles, CA 90017

Copyright Reserved
This Contract or shall not be responsible for all dimensions. DO NOT SCALE THE DRAWING - in the event or omission shall be reported to Stantec without delay.
This drawing is the property of Stantec and shall not be reproduced in whole or in part. Reproduction or use for any purpose other than that authorized by Stantec is forbidden.

REVISION	DESCRIPTION	DATE
	100% RESUBMITTAL	5/13/2024
	100% CONSTRUCTION DRAWING SUBMITTAL	3/27/2024
	90% UPDATED CONSTRUCTION SUBMITTAL	2/13/2024
	90% CONSTRUCTION DRAWING SUBMITTAL	12/07/2023

REPLACEMENT OF MECHANICAL UNITS AT SANTA ANA BUS BASE
4301 W. MAC ARTHUR BLVD., SANTA ANA, CA

PROJECT NOTES AND SHEET INDEX

JOB #:	
DESIGN BY:	SG
DRAWN BY:	RW
CHECKED BY:	GY
DATE:	
SCALE:	12" = 1'-0"
SHEET:	M-002D

OCTA
ORANGE COUNTY TRANSPORTATION AUTHORITY
550 SOUTH MAIN STREET, ORANGE, CA

Autodesk Docs://2014233703_Santa_Ana_Bus/mech_SantaAnaBus_2014233703.rvt
5/8/2024 11:15:01 AM

FAN SCHEDULE

UNIT IDENTIFICATION				APPLICATION	MAX AIRFLOW (CFM)	MIN AIRFLOW (CFM)	ESP (IN-WG)	DRIVE TYPE	FAN WHEEL			FAN MOTOR				ELECTRICAL				OPERATING WEIGHT (LBS.)	CURB ADAPTER REQUIRED	EXISTING CURB SIZE	NEW CURB SIZE	MANUFACTURER	MODEL NUMBER	NOTES
MARK	NUMBER	BUILDING	UNIT/AREA SERVED						TYPE	ARRANGEMENT	SPEED (RPM)	BHP	HP	SPEED (RPM)	DRIVE TYPE	V / PH	FLA	MCA	MOP							
EF	4-1	OREPATIONS	OPER BLDG REST RM	EXHAUST	540	-	0.5	ECM	CENTRIFUGAL	UPBLAST	1,300	0.10	1/4	1,725	DIRECT	115 / 1	2.9	4.00	15	45	N	-	-	GREENHECK	CUE-099-VG	1-6, 9
EF	4-2	OPERATIONS	OPER BLDG MEN'S RM	EXHAUST	1,100	-	0.5	ECM	CENTRIFUGAL	UPBLAST	1,690	0.27	1/4	1,725	DIRECT	115 / 1	3.5	4.00	15	54	N	-	-	GREENHECK	CUE-100-VG	1-6, 9
EF	4-3	OPERATIONS	OPER BLDG ELEC RM 103	EXHAUST	700	-	0.5	ECM	CENTRIFUGAL	UPBLAST	1,330	0.13	1/4	1,725	DIRECT	115 / 1	3.5	4.00	15	54	N	-	-	GREENHECK	CUE-100-VG	1-6, 9
EF	4-4	OPERATIONS	OPER BLDG LOCKER	EXHAUST	320	-	0.5	ECM	CENTRIFUGAL	UPBLAST	1,525	0.08	1/10	1,725	DIRECT	115 / 1	1.5	2.00	15	34	N	-	-	GREENHECK	CUE-090-VG	1-6, 9
SF	4-1	OPERATIONS	ELEC RM 103	SUPPLY	700	-	0.37	ECM	CENTRIFUGAL	ROOF SUPPLY	681	0.10	1/4	1,725	BELT	115 / 1	5.8	7.25	15	175	N	-	-	GREENHECK	RSF-90-4	1-6, 8
EF	5-1	MAINTENANCE	RUNNING REPAIR RM 181	EXHAUST	40,000	20,000	1.0	VFD	CENTRIFUGAL	UPBLAST	951	hh	25	1,725	BELT	460 / 3	34.0	42.50	70	2,350	Y	72 x 72	66 x 66	GREENHECK	QEI-40	1-6, 7
EF	5-2	MAINTENANCE	RM 181	EXHAUST	30,000	15,000	1.0	VFD	CENTRIFUGAL	UPBLAST	969	14.11	15	1,725	BELT	460 / 3	21.0	26.20	45	1,880	Y	64 x 64	60 x 60	GREENHECK	QEI-36	1-6, 7
EF	5-3	MAINTENANCE	RM 178	EXHAUST	28,000	14,000	1.0	VFD	CENTRIFUGAL	UPBLAST	916	12.10	15	1,725	BELT	460 / 3	21.0	26.20	45	1,880	Y	64 x 64	60 x 60	GREENHECK	QEI-36	1-6, 7
EF	5-4	MAINTENANCE	RM 178	EXHAUST	28,000	14,000	1.0	VFD	CENTRIFUGAL	UPBLAST	916	12.10	15	1,725	BELT	460 / 3	21.0	26.20	45	1,880	Y	64 x 64	60 x 60	GREENHECK	QEI-36	1-6, 7
EF	5-5	MAINTENANCE	RM 178	EXHAUST	30,000	15,000	1.0	VFD	CENTRIFUGAL	UPBLAST	969	14.11	15	1,725	BELT	460 / 3	21.0	26.20	45	1,880	Y	64 x 64	60 x 60	GREENHECK	QEI-36	1-6, 7
EF	5-6	MAINTENANCE	STEAM CLEANER	EXHAUST	10,000	5,000	1.0	VFD	CENTRIFUGAL	UPBLAST	1,433	4.16	5	1,725	BELT	460 / 3	7.6	9.50	15	617	Y	40 x 40	38.5 x 38.5	GREENHECK	QEI-22	1-6, 7
EF	5-7	MAINTENANCE	PARTS RM 135	EXHAUST	5,950	-	0.5	VFD	CENTRIFUGAL	UPBLAST	888	1.75	2	1,725	BELT	460 / 3	3.4	4.25	15	165	N	-	-	GREENHECK	CUBE-220-20	1-6, 9
EF	5-8	MAINTENANCE	PARTS RM 135	EXHAUST	5,950	-	0.5	VFD	CENTRIFUGAL	UPBLAST	888	1.75	2	1,725	BELT	460 / 3	3.4	4.25	15	165	N	-	-	GREENHECK	CUBE-220-20	1-6, 9
EF	5-9	MAINTENANCE	PARTS RM 135	EXHAUST	5,950	-	0.5	VFD	CENTRIFUGAL	UPBLAST	888	1.75	2	1,725	BELT	460 / 3	3.4	4.25	15	165	N	-	-	GREENHECK	CUBE-220-20	1-6, 9
EF	5-10	MAINTENANCE	PARTS RM 135	EXHAUST	5,950	-	0.5	VFD	CENTRIFUGAL	UPBLAST	888	1.75	2	1,725	BELT	460 / 3	3.4	4.25	15	165	N	-	-	GREENHECK	CUBE-220-20	1-6, 9
EF	5-11	MAINTENANCE	JAN RM 219	EXHAUST	80	-	0.3	ECM	CENTRIFUGAL	UPBLAST	1,453	0.02	1/15	1,725	DIRECT	115 / 1	1.3	2.00	15	28	N	-	-	GREENHECK	CUE-060-VG	1-6, 9
(E) EF	5-12	MAINTENANCE	MEN'S RM 214, WOMEN 213	EXHAUST	500	-	EXISTING TO REMAIN														N	-	-	DAYTON	5DVP0	10
EF	5-13	MAINTENANCE	MEN'S RM 109	EXHAUST	750	-	0.6	ECM	CENTRIFUGAL	UPBLAST	1,435	0.16	1/4	1,725	DIRECT	115 / 1	3.5	4.00	15	54	N	-	-	GREENHECK	CUE-100-VG	1-6, 9
(E) EF	5-14	MAINTENANCE	WOMEN/SH RM 115	EXHAUST	660	-	EXISTING TO REMAIN														N	-	-	DAYTON	20FT11	10
(E) EF	5-15	MAINTENANCE	JAN RM 114	EXHAUST	315	-	EXISTING TO REMAIN														N	-	-	DAYTON	5DVP0	10
EF	5-16	MAINTENANCE	REBUILT RM 106	EXHAUST	6,200	3,100	0.5	VFD	CENTRIFUGAL	UPBLAST	838	1.60	2	1,725	BELT	460 / 3	3.4	4.25	15	165	N	-	-	GREENHECK	CUBE-240-20	1-6, 9
EF	5-17	MAINTENANCE	REBUILT RM 107	EXHAUST	6,200	3,100	0.5	VFD	CENTRIFUGAL	UPBLAST	838	1.60	2	1,725	BELT	460 / 3	3.4	4.25	15	165	N	-	-	GREENHECK	CUBE-240-20	1-6, 9
EF	5-18	MAINTENANCE	REBUILT RM 108	EXHAUST	6,200	3,100	0.5	VFD	CENTRIFUGAL	UPBLAST	838	1.60	2	1,725	BELT	460 / 3	3.4	4.25	15	165	N	-	-	GREENHECK	CUBE-240-20	1-6, 9
EF	5-19	MAINTENANCE	BREAK RM 121	EXHAUST	3,500	-	0.5	VFD	CENTRIFUGAL	UPBLAST	968	1.11	1 1/2	1,725	BELT	460 / 3	3.0	3.75	15	140	N	-	-	GREENHECK	CUBE-200-15	1-6, 9
EF	5-20	MAINTENANCE	CLEAN SHOP 141	EXHAUST	2,600	-	0.5	VFD	CENTRIFUGAL	UPBLAST	1,635	0.87	1	1,725	BELT	460 / 3	2.1	2.63	15	97	N	-	-	GREENHECK	CUBE-140-10	1-6, 9
EF	5-21	MAINTENANCE	MACHINE RM 144	EXHAUST	3,100	-	0.5	VFD	CENTRIFUGAL	UPBLAST	1,053	0.78	1	1,725	BELT	460 / 3	2.1	2.63	15	132	N	-	-	GREENHECK	CUBE-180-10	1-6, 9
EF	5-22	MAINTENANCE	MACHINE RM 145	EXHAUST	3,100	-	0.5	VFD	CENTRIFUGAL	UPBLAST	1,053	0.78	1	1,725	BELT	460 / 3	2.1	2.63	15	132	N	-	-	GREENHECK	CUBE-180-10	1-6, 9
(E) EF	5-23	MAINTENANCE	COMP REP RM 143	EXHAUST	1,200	-	EXISTING TO REMAIN														N	-	-	DAYTON	-	10
EF	5-24	MAINTENANCE	BLDG MAINT. RM 150	EXHAUST	2,330	-	0.5	ECM	CENTRIFUGAL	UPBLAST	1,501	0.64	3/4	1,725	DIRECT	115 / 1	8.8	11.00	15	76	N	-	-	GREENHECK	CUE-140-VG	1-6, 9
EF	5-25	MAINTENANCE	COMP EXCH. RM 148	EXHAUST	16,000	8,000	1.0	VFD	CENTRIFUGAL	UPBLAST	1,255	7.06	7 1/2	1,725	BELT	460 / 3	11.0	13.80	20	885	Y	46 x 46	46.5 x 46.5	GREENHECK	QEI-27	1-6, 7
EF	5-26	MAINTENANCE	REV. TOIL. RM 160/161	EXHAUST	300	-	0.5	ECM	CENTRIFUGAL	UPBLAST	1,621	0.10	1/10	1,725	DIRECT	115 / 3	1.5	2.00	15	34	N	-	-	GREENHECK	CUE-090-VG	1-6, 9
(E) EF	5-27	MAINTENANCE	LOCKER RM 167	EXHAUST	140	-	EXISTING TO REMAIN														N	-	-	DAYTON	5DVN6	10
EF	5-28	MAINTENANCE	BODY SHOP RM 174	EXHAUST	36,960	18,480	1.0	VFD	CENTRIFUGAL	UPBLAST	1,013	17.45	20	1,725	BELT	460 / 3	27.0	33.80	60	1,013	Y	64 x 64	64.5 x 64.5	GREENHECK	QEI-40	1-6, 7
EF	5-29	MAINTENANCE	STORAGE RM 155	EXHAUST	2,500	-	0.5	ECM	CENTRIFUGAL	UPBLAST	1,115	0.54	3/4	1,200	DIRECT	115 / 1	8.8	11.00	15	84	N	-	-	GREENHECK	CUE-160-VG	1-6
(E) EF	5-30	MAINTENANCE	TEL RM 136	EXHAUST	285	-	EXISTING TO REMAIN														N	-	-	DAYTON	5DVP6	10
EF	5-31	MAINTENANCE	ELEC RM 137	EXHAUST	3,000	-	0.65	ECM	CENTRIFUGAL	UPBLAST	1,406	1.07	2	1,725	DIRECT	460 / 3	3.2	4.00	15	119	N	-	-	GREENHECK	CUE-160-VG	1-6, 9
EF	5-32	MAINTENANCE	LUBE RM 138	EXHAUST	410	-	0.5	ECM	CENTRIFUGAL	UPBLAST	1,621	0.10	1/10	1,725	DIRECT	115 / 3	1.5	2.00	15	34	N	-	-	GREENHECK	CUE-090-VG	1-6, 9
EF	5-33	MAINTENANCE	C.A. RM 139	EXHAUST	6,500	-	1.0	VFD	CENTRIFUGAL	UPBLAST	1,185	2.78	3	1,725	BELT	460 / 3	4.8	6.00	15	203	N	-	-	GREENHECK	CUBE-240HP-30	1-6
EF	5-34	MAINTENANCE	ELEC RM 185	EXHAUST	2,850	-	0.5	ECM	CENTRIFUGAL	UPBLAST	1,312	0.87	2	1,725	DIRECT	460 / 3	3.2	4.00	15	119	N	-	-	GREENHECK	CUE-160-VG	1-6, 9
EF	5-35	MAINTENANCE	ELEC RM 184	EXHAUST	1,300	-	0.63	ECM	CENTRIFUGAL	UPBLAST	1,425	0.33	1/2	1,450	DIRECT	115 / 1	6.4	8.00	15	37	N	-	-	GREENHECK	CUE-130-VG	1-6, 9
(E) EF	5-36	MAINTENANCE	ELEC RM 220	EXHAUST	-	-	EXISTING TO REMAIN														N	-	-	DAYTON	4HZ45G	10
EF	5-37	MAINTENANCE	ENG. DYN. RM 103	EXHAUST	15,000	7,500	1.0	VFD	CENTRIFUGAL	UPBLAST	1,191	6.15	7 1/2	1,725	BELT	460 / 3	11.0	13.80	20	886	Y	46 x 46	46.5 x 46.5	GREENHECK	QEI-27	1-6, 9
EF	5-38	MAINTENANCE	TRAN DYN. RM 105	EXHAUST	850	-	0.5	ECM	CENTRIFUGAL	UPBLAST	1,448	0.17	1/4	1,725	DIRECT	115 / 1	3.5	4.00	15	54	N	-	-	GREENHECK	CUE-100-VG	1-6, 9
EF	5-39	MAINTENANCE	EQUIP. STOR. RM 129	EXHAUST	375	-	0.5	ECM	CENTRIFUGAL	UPBLAST	1,525	0.10	1/6	1,725	DIRECT	115 / 1	2.3	3.00	15	40	N	-	-	GREENHECK	CUE-095-VG	1-6, 9
EF	5-40	MAINTENANCE	LOADING ABY RM 170	EXHAUST	1,100	-	0.5	ECM	CENTRIFUGAL	UPBLAST	1,328	0.22	1/4	1,400	DIRECT	115 / 1	3.5	4.00	15	57	N	-	-	GREENHECK	CUE-120-VG	1-6, 9
EF	5-41	MAINTENANCE	UPHOLSTRY SHOP RM 151	EXHAUST	990	-	0.5	ECM	CENTRIFUGAL	UPBLAST	984	0.17	1/4	1,000	DIRECT	115 / 1	3.5	4.00	15	72	N	-	-	GREENHECK	CUE-140-VG	1-6, 9
EF	5-42	MAINTENANCE	FUEL RM 102	EXHAUST	650	-	1.0	ECM	CENTRIFUGAL	UPBLAST	1,633	0.18	1/4	1,770	DIRECT	115 / 1		7.25	15	95	N	-	-	GREENHECK	USF-8-VG	1-6, 9
(E) EF	5-43	MAINTENANCE	PAINT BOOTH	EXHAUST	-	-	EXISTING TO REMAIN														N	-	-	NEW YORK BLOWER	PLR-33	10
SF	5-1	MAINTENANCE	PARTS RM 135	SUPPLY	7,330	-	1.0	VFD	CENTRIFUGAL	ROOF SUPPLY	564	2.52	3	1,725	BELT	460 / 3	4.8	6.00	15	766	N	-	-	GREENHECK	RSF-200-30	1-6, 8
SF	5-2	MAINTENANCE	PARTS RM 135	SUPPLY	7,330	-	1.0	VFD	CENTRIFUGAL	ROOF SUPPLY	564	2.52	3	1,725	BELT	460 / 3	4.8	6.00	15	766	N	-	-	GREENHECK	RSF-200-30	1-6, 8
SF	5-3	MAINTENANCE	PARTS RM 135	SUPPLY	7,330	-	1.0	VFD	CENTRIFUGAL	ROOF SUPPLY	564	2.52	3	1,725	BELT	460 / 3	4.8	6.00	15	766	N	-	-	GREENHECK	RSF-200-30	1-6, 8
SF	5-4	MAINTENANCE	REBUILT RM 106	SUPPLY	9,200	-	1.0	VFD	CENTRIFUGAL	ROOF SUPPLY	605	3.87	5	1,725	BELT	460 / 3	7.6	9.50	15	783	N	-	-	GREENHECK	RSF-200-50	1-6, 8
SF	5-5	MAINTENANCE	BRAKE RM 121	SUPPLY	3,200	-	1.0	VFD	CENTRIFUGAL	ROOF SUPPLY	979	1.42	1.5	1,752	BELT	460 / 3	3.0	3.75	15	307	N	-	-	GREENHECK	RSF-120-15	1-6, 8
SF	5-6	MAINTENANCE	CLEAN SHOP RM 141	SUPPLY	2,400	-	1.0	VFD	CENTRIFUGAL	ROOF SUPPLY	896	0.86	1	1,725	BELT	460 / 3	2.1	2.63	15	302	Y	30 x 30	34 x 34	GREENHECK	RSF-120-10	1-6, 8
(E) SF	5-7	MAINTENANCE	MECH SHOP RM 144	EXHAUST	3,000	-	EXISTING TO REMAIN														N	-	-	DAYTON	5AU56	10
SF	5-8	MAINTENANCE	COMP. SHOP. RM 143	SUPPLY	1,300	-	1.0	VFD	CENTRIFUGAL	ROOF SUPPLY	1,274	0.57	3/4	1,725	BELT	460 / 3	1.6	2.00	15	199	N	-	-	GREENHECK	RSF-90-7	1-6, 8
SF	5-9	MAINTENANCE	BLDG MAINT. RM 150	SUPPLY	4,000	-	1.0	VFD	CENTRIFUGAL	ROOF SUPPLY	855	1.93	2	1,725	BELT	460 / 3	3.4	4.25	15	427	N	-	-	GREENHECK	RSF-150-20	1-6, 8
SF	5-10	MAINTENANCE	STORAGE RM 155	SUPPLY	2,500	-	1.0	VFD	CENTRIFUGAL	ROOF SUPPLY	905	0.92	1	1,725	BELT	460 / 3	2.1	2.63	15	302	Y	30 x 30	34 x 34	GREENHECK	RSF-120-10	1-6, 8
(E) SF	5-11	MAINTENANCE	ELEC RM 137	EXHAUST	3,000	-	EXISTING TO REMAIN														N	-	-	DAYTON	SAU56	10
SF	5-12	MAINTENANCE	ELEC RM 185	SUPPLY	850	-	0.5	VFD	CENTRIFUGAL	ROOF SUPPLY	844	0.18	1/2	1,725	BELT	460 / 3	1.1	1.38	15	194	N	-	-	GREENHECK	RSF-90-5	1-6, 8
SF	5-13	MAINTENANCE	ELEC RM 184	SUPPLY	1,200	-	0.8	VFD	CENTRIFUGAL	ROOF SUPPLY	1,147	0.43	1/2	1,725	BELT	460 / 3	1.1	1.38	15	196	N	-	-	GREENHECK	RSF-90-5	1-6, 8
SF	5-14	MAINTENANCE	ELEC RM 220	SUPPLY	3,100	-	1.0	VFD	CENTRIFUGAL	ROOF SUPPLY	968	1.34	1 1/2	1,725	BELT	460 / 3	3.0	3.75	15	307	N	-	-	GREENHECK	RSF-120-5	1-6, 8
SF	5-15	MAINTENANCE	TRAN DYN. RM 105	SUPPLY	820	-	0.4	VFD	CENTRIFUGAL	ROOF SUPPLY	764	0.15	1/2	1,725	BELT	460 / 3	1.1	1.38	15	194	N	-	-	GREENHECK	RSF-90-5	1-6, 8
SF	5-16	MAINTENANCE	LOADING ABY RM 170	SUPPLY	1,200	-	0.8	VFD	CENTRIFUGAL	ROOF SUPPLY	1,147	0.43	1/2	1,725	BELT	460 / 3	1.1	1.38	15	196	N	-	-	GREENHECK	RSF-90-5	1-6, 9
EF	6-1	FUEL/BRAKE	BRAKE/BST RM 114/001	EXHAUST	31,000	-	1.0	VFD	CENTRIFUGAL	UPBLAST	996	15.20	20	1,725	BELT	460 / 3	27.0	33.80	60	1,900	Y	64 x 64	60 x 60	GREENHECK	QEI-36	1-6, 7
EF	6-2	FUEL/BRAKE	FUEL AREA RM 115	EXHAUST	26,000	-	1.0	VFD	CENTRIFUGAL	UPBLAST	1,130	13.44	15	1,725	BELT	460 / 3	21.0	26.20	45	1,610	Y	58 x 58	54.5 x 54.5	GREENHECK	QEI-33	1-6, 7
EF	6-3	FUEL/BRAKE	BODY/SHOP 118/116	EXHAUST	18,000	-	1.0	VFD	CENTRIFUGAL	UPBLAST	1,384	9.21	10	1,725	BELT	460 / 3	14.0	17.50	30	912	Y	46 x 46	46.5 x 46.5	GREENHECK	QEI-27	1-6, 7
EF	6-4	FUEL/BRAKE	MEN'S RM	EXHAUST	120	-	0.25	ECM	CENTRIFUGAL	UPBLAST	1,691	0.03	1/15	1,725	DIRECT	115 / 1	1.3	2.00	15	28	N	-	-	GREENHECK	CUE-060-VG	1-6, 9
(E) EF	6-5	FUEL/BRAKE	WOMEN'S RM	EXHAUST	100	-	EXISTING TO REMAIN														N	-	-	DAYTON	5DVN8	10
EF	6-6	FUEL/BRAKE	LOCKER/LAUNDRY	EXHAUST	230	-	0.5	ECM	CENTRIFUGAL	UPBLAST	1,638	0.06	1/10	1,725	DIRECT	115 / 1	1.5	2.00	15	37	N	-	-	GREENHECK	CUE-080-VG	1-6, 9
EF	6-7	FUEL/BRAKE	C.A. 111/TEL. 112	EXHAUST	7,000	-	0.5	VFD	CENTRIFUGAL	UPBLAST	1,180	2.55	3	1,725	BELT	460 / 3	4.8	6.00	15	203	N	-	-	GREENHECK	CUBE-240HP-30	1-6, 9
EF	6-8	FUEL/BRAKE	FLUID TANK 110/GREESE TANK 109	EXHAUST	440	-	0.25	ECM	CENTRIFUGAL	UPBLAST	1,388	0.06	1/10	1,725	DIRECT	115 / 1	1.5	2.00	15	34	N	-	-	GREENHECK	CUE-90-VG	1-6, 9
EF	6-9	FUEL/BRAKE	FUEL RM 115	EXHAUST	1,500	-	0.75	ECM	CENTRIFUGAL	UPBLAST	1,268	0.38	1/2	1,300	DIRECT	115 / 1	6.4	8.00	15	73	N	-	-	GREENHECK	CUE-140-VG	1-6, 9
SF	6-1	FUEL/BRAKE	TIRE BAY RM 116	SUPPLY	9,000	-	1.0	VFD	CENTRIFUGAL	ROOF SUPPLY	BELT	3.69	5	1,725	BELT	460 / 3	7.6	9.50	15	783	N	-	-	GREENHECK	RSF-200-50	1-6, 8
SF	6-2	FUEL/BRAKE	BASEMENT 001	SUPPLY	4,000	-	1.0	VFD	CENTRIFUGAL	ROOF SUPPLY	855	1.93	2	1,725	BELT	460 / 3	3.4	4.25	15	427	N	-	-	GREENHECK	RSF-150-20	1-6, 8
EF	7-1	BUS WASH	BUS WASH	EXHAUST	8,000	-	0.5	VFD	CENTRIFUGAL	UPBLAST	601	1.59	2	1,725	BELT	460 / 3	3.4	4.25	15	206	N	-	-	GREENHECK	CUBE-300-20	1-6, 7
EF	7-2	BUS WASH	BUS WASH	EXHAUST	4,000	-	0.5	VFD	CENTRIFUGAL	UPBLAST	1,321	1.52	2	1,725	BELT	460 / 3	3.4	4.25	15	141	N	-	-	GREENHECK	CUBE-180-20	1-6, 9
EF	8-1	DETAILING	DETAILING/CLEANIN EQUIP. RM	EXHAUST	750	-	0.5	ECM	CENTRIFUGAL	UPBLAST	1,502	0.16	1/4	1,725	DIRECT	115 / 1	2.9	4.00	15	45	N	-	-	GREENHECK	CUE-099-VG	1-6, 9

NOTES:
1. CONTRACTOR TO VERIFY EXISTING ROOF CURB SIZE AND PROVIDE CURB ADAPTER AS NECESSARY FOR NEW FAN.
2. CONTRACTOR TO VERIFY THAT EXISTING ELECTRICAL SERVICE IS ADEQUATE FOR NEW FAN.
3. PROVIDE WITH DISCONNECT, BY DIV 26.
4. PROVIDE WITH BACKDRAFT DAMPER. LISTED MAX ETERNAL STATIC PRESSURE [EXCLUDES/INCLUDES] DAMPER. - FOR EXHAUST FANS ONLY.
5. PROVIDE WITH NEMA PREMIUM EFFICIENCY MOTORS.
6. PROVIDE WITH WEATHERPROOF CONSTRUCTION.
7. EQUIPMENT FURNISHED WITH BACK DRAFT DAMPER, DUCT ADAPTERS, TWO SPEED, 2-WINDING FAN MOTOR. INTERLOCK WITH FUTURE LNG SYSTEM.
8. PROVIDE WITH DUCT ADAPTER, BACKDRAFT DAMPER, DISCONNECT SWITCH, SMOKE DETECTOR, S'TAT AND FILTERS.
9. EQUIPMENT BACKDRAFT DAMPER AND DISCONNECT SWITCH.
10. EXISTING EQUIPMENT TO REMAIN.

IFB 4-2550 EXHIBIT B

Stantec
801 S. Figueroa Street, Suite 300
Los Angeles, CA 90017

Copyright Reserved
The Contractor shall verify and be responsible for all dimensions. DO NOT scale the drawing - any errors or omissions shall be reported to Stantec without delay.
The Copyrights to all designs and drawings are the property of Stantec. Reproduction or use for any purpose other than that authorized by Stantec is forbidden.

REVISION	DESCRIPTION	DATE
	90% CONSTRUCTION DRAWING SUBMITTAL	12/07/2023
	90% UPDATED CONSTRUCTION SUBMITTAL	2/13/2024
	100% CONSTRUCTION DRAWING SUBMITTAL	3/27/2024
	100% RESUBMITTAL	5/13/2024

REPLACEMENT OF MECHANICAL UNITS AT SANTA ANA BUS BASE
4301 W. MAC ARTHUR BLVD., SANTA ANA, CA

FAN SCHEDULE

JOB #:
DESIGN BY: SG
DRAWN BY: RW
CHECKED BY: GY
DATE:
SCALE:
SHEET: M-003 D

LICENSED PROFESSIONAL ENGINEER SEVAK GALSTYAN M 39730 EXP. 12/31/25 MECHANICAL STATE OF CALIFORNIA

OCTA
ORANGE COUNTY TRANSPORTATION AUTHORITY
550 SOUTH MAIN STREET, ORANGE, CA

Autodesk Docs://20142337003_Santa_Ana_Bus/mech_SantaAnaBus_20142337003.rvt

5/8/2024 11:15:02 AM

IFB 4-2550 EXHIBIT B

PACKAGED ROOFTOP UNIT SCHEDULE

UNIT IDENTIFICATION					FAN DATA				COIL DATA												EFFICIENCY			ELECTRICAL				UNIT DIMENSIONS							
					INDOOR			OUTDOOR			DX COOLING COIL							HEATING COIL																	
MARK	NUMBER	TYPE	BUILDING	AREA SERVED	FAN DRIVE TYPE	DESIGN AIRFLOW (CFM)	DESIGN ESP (INWC)	FAN DRIVE TYPE	AMBIENT DRY BULB	MINIMUM OUTSIDE AIR (CFM)	REFRIG.	TOTAL COOLING CAPACITY (BTU/H)	SENS. COOLING CAPACITY...	ENTERING DB (F)	ENTERING WB (F)	LEAVING DB (F)	LEAVING WB (F)	OUTPUT HEATING CAPACITY	ENTERIN G DB (F)	LEAVING DB (F)	HSPF	EER	SEER	V / PH	SYSTE M POWER (kW)	MCA	MOP	OPERATING WEIGHT (LBS)	HEIGHT (FT)	WIDTH (FT)	LENGTH (FT)	CURB ADAPTER MODEL	MANUFACTURER	MODEL	NOTES
RTU	4-1	PACKAGED RTU	OPERATIONS	NORTH	VARIABLE DIRECT	4,830	1	DIRECT	95	740	R-410A	178,000	125500	80	67	55	54	202	70	108	-	11	14.6	460 / 3	17.4	41.0	50	1,925	5	7.5	10.5	CA-TRN-593-TRN-592-...	TRANE	YSJ1804S0L	ALL
RTU	4-2	PACKAGED RTU	OPERATIONS	CENTRAL NORTH	VARIABLE DIRECT	2,350	1	DIRECT	95	100	R-410A	74,000	55,000	80	67	56	56	65	70	95	-	11	14.6	460 / 3	7.1	18.0	20	968	4.2	4.4	7.3	-	TRANE	YSJ072A4S0L	ALL
RTU	4-3	PACKAGED RTU	OPERATIONS	CENTRAL SOUTH	VARIABLE DIRECT	4,100	1	DIRECT	95	885	R-410A	118,000	91,000	80	67	58	57	121	70	97	-	11	14.6	460 / 3	11.8	29.0	40	1,020	4.2	4.4	7.3	-	TRANE	YSJ120A4S0L	ALL
RTU	4-4	PACKAGED RTU	OPERATIONS	SOUTH	VARIABLE DIRECT	4,000	1	DIRECT	95	940	R-410A	119,000	92,000	80	67	58	57	121	70	97	-	11	14.6	460 / 3	10.5	25.0	30	995	4.2	4.4	7.3	-	TRANE	YSJ102A4S0L	ALL
RTU	5-1	PACKAGED RTU	MAINTENANCE	2ND FLR OFFICES	VARIABLE DIRECT	5,910	1	DIRECT	95	830	R-410A	182,080	149,000	75	61	50	49	202	70	101	-	10.8	14.0	460 / 3	19.7	49.0	60	1,954	5	7.5	10.5	-	TRANE	YSJ210A4S0L	ALL
RTU	5-2	PACKAGED RTU	MAINTENANCE	BREAK ROOM	VARIABLE DIRECT	5,040	1	DIRECT	95	1,115	R-410A	179,000	128,000	80	67	56	55	202	70	104	-	10.8	14.0	460 / 3	17.6	41.0	50	1,924	5	7.5	10.5	-	TRANE	YSJ1804S0L	ALL
RTU	5-3	PACKAGED RTU	MAINTENANCE	REVENUE OFFICES	VARIABLE DIRECT	5,400	1	DIRECT	95	1,250	R-410A	180,000	132,000	80	67	56	55	202	70	104	-	10.8	14.0	460 / 3	17.6	41.0	50	1,924	5	7.5	10.5	-	TRANE	YSJ1804S0L	ALL
RTU	5-4	PACKAGED AC	MAINTENANCE	OFFICE	VARIABLE DIRECT	770	1	DIRECT	95	30	R-410A	23,800	6,600	80	67	55	53	23,200	70	95	7	11	13.4	208 / 1	1.8	20.6	30	328	3.3	3.75	4.9	CA-TRN-1213-TRN-59...	TRANE	4WCC4048E1000A	ALL
RTU	5-5	PACKAGED AC	MAINTENANCE	OFFICE	VARIABLE DIRECT	770	1	DIRECT	95	50	R-410A	23,800	9,300	80	67	55	53	23,200	70	95	7	11	13.4	208 / 1	1.8	20.6	30	328	3.3	3.75	4.9	CA-TRN-1213-TRN-59...	TRANE	4WCC4048E1000A	ALL
RTU	6-1	PACKAGED AC	FUEL/BRAKE	OFFICE	VARIABLE DIRECT	1,570	0.5	DIRECT	95	135	R-410A	47,000	42,000	80	67	55	53	45,000	70	95	7	11	13.4	208 / 1	4.1	31.9	50	425	4.1	4	5.1	CA-TRN-1235-TRN-5750	TRANE	4WCC4048E1000A	ALL

NOTES:
1. CONTRACTOR TO VERIFY EXISTING ROOF CURB SIZE AND PROVIDE CURB ADAPTER MODEL PER SCHEDULE FOR NEW EQUIPMENT.
2. PROVIDE WITH INTERMITTENT IGNITION DEVICE (IID)
3. FILTERS ARE TO BE PROVIDED WITH PRE-FILTER. MAXIMUM PRESSURE DROP SHALL BE BASED ON TOTAL PRESSURE DROP ACROSS THE FILTER BANK WITH DIRTY FILTERS.
4. PROVIDE WITH 100% MODULATING DRY-BULB TYPE AIR ECONOMIZER.
5. DISCONNECT PROVIDED BY DIVISION 26 CONTRACTOR.
6. PROVIDE SCCR RATINGS GREATER THAN FAULT AMPS SHOWN ON ELECTRICAL DRAWINGS.
7. PROVIDE SUPPLY AND POWERED EXHAUST FANS WITH VFD- BY RTU MANUFACTURER.
8. UNIT SHALL COMPLY WITH ECONOMIZER FAULT DETECTION AND DIAGNOSTICS (FDD) REQUIREMENTS PER CALIFORNIA TITLE 24, PART 6.
9. PROVIDE WITH DUCT SMOKE DETECTOR FOR AUTOMATIC UNIT SHUT OFF. FURNISHED AND WIRED BY DIV 26 CONTRACTOR. ISNTALLED BY DIV 23 CONTRACTOR.
10. LISTED UNIT OPERATING WEIGHT EXCLUDES CURB.
11. UNIT TO BE BACNET COMPATIBLE AND SHALL BE TIED TO THE EXISTING ENERGY MANAGEMENT CONTROL SYSTEM (EMCS).
12. PROVIDE VIBRATION ISOLATION AND SEISMIC RESTRAINT.
13. PROVIDE INVERTER-READY NEMA PREMIUM EFFICIENCY MOTOR WITH SHAFT GROUNDING SYSTEM.
14. PROVIDE A PROGRAMMABLE THERMOSTAT WITH TEMPERATURE SETPOINTS FOR AT LEAST FOUR SCHEDULING PERIODS WITHIN 24 HOURS.
15. PROVIDE CONDENSER COIL GAURD.
16. PROVIDE WITH 115V FIELD POWERED SERVICE OUTLET.
17. PROVIDE WITH MERV-13 FILTER.

MAKEUP AIR UNIT SCHEDULE

UNIT IDENTIFICATION					SUPPLY FAN					HEATING			ELECTRICAL				PHYSICAL CHARACTERISTICS							
MARK	NUMBER	TYPE	BUILDING	AREA SERVED	SUPPLY AIR VOLUME (CFM)	TOTAL STATIC PRESSURE (IN. W.C.)	MOTOR TYPE	MOTOR POWER (HP)	MOTOR SPEED (RPM)	MAX INPUT (BTU/H)	FUEL TYPE	SUPPLY GAS PRESSURE (INWC)	UNIT VOLT / PH	FLA	CONTROL V / PH	CONTROL TRANSFORMER (VA)	UNIT OPERATING WEIGHT (LBS)	HEIGHT (IN)	WIDTH (IN)	LENGTH (IN)	CURB ADAPTER MODEL	MANUFACTURER	MODEL	NOTES
MAU	5-1	MAKEUP AIR UNIT	MAINTENANCE	RUNNING REPAIR, RM 181	20,000	3	BELT	20	1,800	838,000	NATURAL GAS	10 - 14	460 / 3	28.1	115 / 1	500	2,699	63	91	186	VIBREX SRC-125	TRANE	DFOA-125-HLB	1-10
MAU	5-2	MAKEUP AIR UNIT	MAINTENANCE	RUNNING REPAIR, RM 179	15,000	3	BELT	15	1,800	668,000	NATURAL GAS	10 - 14	460 / 3	22.1	115 / 1	500	1,958	51	78	166	VIBREX SRC-122	TRANE	DFOA-122-HRB	1-10
MAU	5-3	MAKEUP AIR UNIT	MAINTENANCE	RUNNING REPAIR, RM 179	14,000	3	BELT	15	1,800	623,000	NATURAL GAS	10 - 14	460 / 3	22.1	115 / 1	500	1,958	51	78	166	VIBREX SRC-122	TRANE	DFOA-122-HRB	1-10
MAU	5-4	MAKEUP AIR UNIT	MAINTENANCE	RUNNING REPAIR, RM 179	14,000	3	BELT	15	1,800	623,000	NATURAL GAS	10 - 14	460 / 3	22.1	115 / 1	500	1,958	51	78	166	VIBREX SRC-122	TRANE	DFOA-122-HRB	1-10
MAU	5-5	MAKEUP AIR UNIT	MAINTENANCE	RUNNING REPAIR, RM 179	15,000	3	BELT	15	1,800	668,000	NATURAL GAS	10 - 14	460 / 3	22.1	115 / 1	500	1,958	51	78	166	VIBREX SRC-122	TRANE	DFOA-125-HRB	1-10
MAU	5-6	MAKEUP AIR UNIT	MAINTENANCE	BODY SHOP, RM 174	17,700	3	BELT	15	1,800	788,000	NATURAL GAS	10 - 14	460 / 3	22.1	115 / 1	500	2,699	63	91	186	VIBREX SRC-125	TRANE	DFOA-125-HRB	1-10
MAU	5-7	MAKEUP AIR UNIT	MAINTENANCE	COMP. EXH., RM 148	6,000	3	BELT	7 1/2	1,800	223,000	NATURAL GAS	10 - 14	460 / 3	12.1	115 / 1	500	1,187	39	52	140	VIBREX SRC-115	TRANE	DFOA-115-HRB	1-10
MAU	5-8	MAKEUP AIR UNIT	MAINTENANCE	CORR., RM 101	2,400	3	BELT	3	1,800	175,000	NATURAL GAS	10 - 14	460 / 3	5.9	115 / 1	500	1,187	39	52	140	VIBREX SRC-109	TRANE	DFOA-109-HRB	1-10
(E) MAU	*5-9*	*MAKEUP AIR UNIT*	*MAINTENANCE*	*PAINT BOOTH*	*37,800*	*2*	-	-	-	-	-	-	-	-	-	-	-	-	-	-		-	-	*11*

NOTES:
1. PROVIDE WITH INLET HOOD
2. PROVIDE WITH SHUTOFF DAMPERS
3. PROVIDE WITH VIBRATION ISOLATORS
4. PROVIDE WITH PAINTED CABINET / ACCESSORIES
5. PROVIDE WITH DISCONNECT SWITCH BY DIVISION 26.
6. PROVIDE WITH REMOTE CONTROL STATION
7. PROVIDE WITH MRT TOUCH REMOTE CONTROL STATION.
8. PROVIDE WITH G-90 GALVANIZED STEEL FILTER.
9. CONTRACTOR TO VERIFY EXISTING ROOF CURB SIZE AND PROVIDE CURB ADAPTER MODEL PER SCHEDULE FOR NEW EQUIPMENT.
10. PROVIDE WITH EMERGENCY POWER OFF SWITCH.
11. EXISTING EQUIPMENT TO REMAIN.

Stantec
801 S. Figueroa Street, Suite 300
Los Angeles, CA 90017

Copyright Reserved
The Contractor shall verify and be responsible for all dimensions. DO NOT scale the drawing - any errors or omissions shall be reported to Stantec without delay.
The Copyrights to all designs and drawings are the property of Stantec. Reproduction or use for any purpose other than that authorized by Stantec is forbidden.

REVISION	DESCRIPTION	DATE
	100% RESUBMITTAL	5/13/2024
	100% CONSTRUCTION DRAWING SUBMITTAL	3/27/2024
	90% UPDATED CONSTRUCTION SUBMITTAL	2/13/2024
	90% CONSTRUCTION DRAWING SUBMITTAL	12/07/2023

REPLACEMENT OF MECHANICAL UNITS AT SANTA ANA BUS BASE
4301 W. MAC ARTHUR BLVD., SANTA ANA, CA

ROOFTOP AND MAKEUP AIR UNITS SCHEDULES

JOB #:
DESIGN BY: SG
DRAWN BY: RW
CHECKED BY: GY
DATE:
SCALE:
SHEET: **M-004D**

LICENSED PROFESSIONAL ENGINEER SEVAK GALSTYAN M 39730 EXP. 12/31/25 MECHANICAL STATE OF CALIFORNIA

OCTA
ORANGE COUNTY
TRANSPORTATION AUTHORITY
550 SOUTH MAIN STREET, ORANGE, CA

PACKAGED HEAT PUMP SCHEDULE

UNIT IDENTIFICATION					FAN DATA			COIL DATA												EFFICIENCY		ELECTRICAL				UNIT DIMENSIONS							
											COOLING MODE						HEATING MODE																
MARK	NUMBER	TYPE	BUILDING	AREA SERVED	FAN DRIVE TYPE	DESIGN AIRFLOW (CFM)	DESIGN ESP (INWC)	AMBIENT DRY BULB (F)	MIN. OUTSIDE AIR (CFM)	REFRIG.	TOTAL COOLING CAPACITY (MBH)	POWER INPUT (kW)	ENTERING DB (F)	ENTERING WB (F)	LEAVING DB (F)	LEAVING WB (F)	OUTPUT HEATING CAPACITY	POWER INPUT (kW)	ENTERING DB (F)	LEAVING DB (F)	EER (BTU/WATT-HR)	SEER (BTU/WATT-HR)	V / PH	MCA	MOP	FILTER RATING	OPERATING WEIGHT (LBS)	HEIGHT (FT)	WIDTH (FT)	LENGTH (FT)	CURB ADAPTER MODEL	MANUFACTURER	MODEL	NOTES
HP	5-1	HEAT PUMP	MAINTENANCE	CONTROL	4-SPEED DIRECT	770	0.5	95	30	R-410A	23,800	2.09	76	62	55	54	23,200	1.95	70	95	11	13.4	208 / 1	20.6	30	MERV 13	328	46	45	52	-	TRANE	4WCC4024E1000A	ALL
HP	6-1	HEAT PUMP	FUEL/BRAKE	BLDG. OFFICE	4-SPEED DIRECT	770	0.5	95	30	R-410A	23,800	2.09	74	61	55	54	23,200	1.95	70	95	11	13.4	208 / 1	20.6	30	MERV 13	328	46	45	52	CA-TRN-1213-TRN-590-9	TRANE	4WCC4024E1000A	ALL

NOTES:
1. CONTRACTOR TO VERIFY EXISTING ROOF CURB SIZE AND PROVIDE CURB ADAPTER AS NECESSARY FOR NEW EQUIPMENT.
2. PROVIDE WITH INTERMITTENT IGNITION DEVICE (IID)
3. FILTERS ARE TO BE PROVIDED WITH PRE-FILTER. MAXIMUM PRESSURE DROP SHALL BE BASED ON TOTAL PRESSURE DROP ACROSS THE FILTER BANK WITH DIRTY FILTERS.
4. PROVIDE WITH 100% MODULATING DRY-BULB TYPE AIR ECONOMIZER.
5. DISCONNECT PROVIDED BY DICISION 26 CONTRACTOR.
6. PROVIDE SCCR RATINGS GREATER THAN FAULT AMPS SHOWN ON ELECTRICAL DRAWINGS.
7. PROVIDE SUPPLY AND POWERED EXHAUST FANS WITH VFD- BY RTU MANUFACTURER.
8. UNIT SHALL COMPLY WITH ECONOMIZER FAULT DETECTION AND DIAGNOSTICS (FDD) REQUIREMENTS PER CALIFORNIA TITLE 24, PART 6.
9. PROVIDE WITH DUCT SMOKE DETECTOR FOR AUTOMATIC UNIT SHUT OFF. FURNISHED AND WIRED BY DIV 26 CONTRACTOR. ISNTALLED BY DIV 23 CONTRACTOR.
10. LISTED UNIT OPERATING WEIGHT EXCLUDES CURB.
11. UNIT TO BE BACNET COMPATIBLE AND SHALL BE TIED TO THE EXISTING ENERGY MANAGEMENT CONTROL SYSTEM (EMCS).
12. PROVIDE VIBRATION ISOLATION AND SEISMIC RESTRAINT.
13. PROVIDE INVERTER-READY NEMA PREMIUM EFFICIENCY MOTOR WITH SHAFT GROUNDING SYSTEM.
14. PROVIDE A PROGRAMMABLE THERMOSTAT WITH TEMPERATURE SETPOINTS FOR AT LEAST FOUR SCHEDULING PERIODS WITHIN 24 HOURS.
15. PROVIDE CONDENSER COIL GAURD.
16. PROVIDE WITH 115V FIELD POWERED SERVICE OUTLET.

PACKAGED AIR CONDITIONER SCHEDULE

UNIT IDENTIFICATION					FAN DATA		COIL DATA			EFFICIENCY		ELECTRICAL				FILTER	UNIT DIMENSIONS							
MARK	NUMBER	TYPE	BUILDING	AREA SERVED	FAN DRIVE TYPE	DESIGN AIRFLOW (CFM)	AMBIENT DRY BULB (F)	REFRIGERANT	TOTAL COOLING CAPACITY (MBH)	EER	SEER	V / PH	SYSTEM POWER (kW)	MCA	MOP	FILTER RATING	OPERATING WEIGHT (LBS)	HEIGHT (IN)	WIDTH (IN)	LENGTH (IN)	CURB ADAPTER MODEL	MANUFACTURER	MODEL	NOTES
AC	4-1	PACKAGED COOLING UNIT	OPERATIONS	COMPUTER ROOM	4-SPEED DIRECT	785	95	R-410A	23,200	11	13.4	208 / 1	3.4	16.7	25	MERV 13	358	36	49	42	CA-TRN-1213-TRN-590-9	TRANE	4TCC4042E1000A	ALL
AC	4-2	PACKAGED COOLING UNIT	OPERATIONS	TELECOM ROOM	4-SPEED DIRECT	785	95	R-410A	23,200	11	13.4	208 / 1	3.4	16.7	25	MERV 13	358	36	49	42	-	TRANE	4TCC4042E1000A	ALL
AC	5-1	PACKAGED COOLING UNIT	MAINTENANCE	COMM ROOM	4-SPEED DIRECT	785	95	R-410A	23,200	11	13.4	208 / 1	3.4	16.7	25	MERV 13	358	36	49	42	-	TRANE	4TCC4042E1000A	ALL
AC	5-2	PACKAGED COOLING UNIT	MAINTENANCE	LAN ROOM	4-SPEED DIRECT	785	95	R-410A	23,200	11	13.4	208 / 1	3.4	16.7	25	MERV 13	358	36	49	42	-	TRANE	4TCC4042E1000A	ALL
AC	6-1	PACKAGED COOLING UNIT	FUEL/BRAKE	COMM	4-SPEED DIRECT	785	95	R-410A	23,200	11	13.4	208 / 1	3.4	16.7	25	MERV 13	358	36	49	42	CA-TRN-1213-TRN-590-9	TRANE	4TCC4042E1000A	ALL

NOTES:
1. CONTRACTOR TO VERIFY EXISTING ROOF CURB SIZE AND PROVIDE CURB ADAPTER AS NECESSARY FOR NEW EQUIPMENT.
2. PROVIDE WITH INTERMITTENT IGNITION DEVICE (IID)
3. FILTERS ARE TO BE PROVIDED WITH PRE-FILTER. MAXIMUM PRESSURE DROP SHALL BE BASED ON TOTAL PRESSURE DROP ACROSS THE FILTER BANK WITH DIRTY FILTERS.
4. PROVIDE WITH 100% MODULATING DRY-BULB TYPE AIR ECONOMIZER.
5. DISCONNECT PROVIDED BY DICISION 26 CONTRACTOR.
6. PROVIDE SCCR RATINGS GREATER THAN FAULT AMPS SHOWN ON ELECTRICAL DRAWINGS.
7. PROVIDE SUPPLY AND POWERED EXHAUST FANS WITH VFD- BY RTU MANUFACTURER.
8. UNIT SHALL COMPLY WITH ECONOMIZER FAULT DETECTION AND DIAGNOSTICS (FDD) REQUIREMENTS PER CALIFORNIA TITLE 24, PART 6.
9. PROVIDE WITH DUCT SMOKE DETECTOR FOR AUTOMATIC UNIT SHUT OFF. FURNISHED AND WIRED BY DIV 26 CONTRACTOR. ISNTALLED BY DIV 23 CONTRACTOR.
10. LISTED UNIT OPERATING WEIGHT EXCLUDES CURB.
11. UNIT TO BE BACNET COMPATIBLE AND SHALL BE TIED TO THE EXISTING ENERGY MANAGEMENT CONTROL SYSTEM (EMCS).
12. PROVIDE VIBRATION ISOLATION AND SEISMIC RESTRAINT.
13. PROVIDE INVERTER-READY NEMA PREMIUM EFFICIENCY MOTOR WITH SHAFT GROUNDING SYSTEM.
14. PROVIDE A PROGRAMMABLE THERMOSTAT WITH TEMPERATURE SETPOINTS FOR AT LEAST FOUR SCHEDULING PERIODS WITHIN 24 HOURS.
15. PROVIDE CONDENSER COIL GAURD.
16. PROVIDE WITH 115V FIELD POWERED SERVICE OUTLET.

LICENSED PROFESSIONAL ENGINEER
SEVAK GALSTIAN
M-39730
EXP. 12/31/25
MECHANICAL
STATE OF CALIFORNIA

IFB 4-2550 EXHIBIT B

Stantec
801 S. Figueroa Street, Suite 300
Los Angeles, CA 90017

Copyright Reserved
The Contractor shall verify and be responsible for all dimensions. DO NOT scale the drawing - use dimensions or omissions shall be reported to Stantec without delay.
This drawing is the property of Stantec and shall not be reused or reproduced in whole or in parts. Reproduction or use for any purpose other than that authorized by Stantec is forbidden.

REVISION	DESCRIPTION	DATE
	100% RESUBMITTAL	5/13/2024
	100% CONSTRUCTION DRAWING SUBMITTAL	3/27/2024
	90% UPDATED CONSTRUCTION SUBMITTAL	2/13/2024

REPLACEMENT OF MECHANICAL UNITS AT SANTA ANA BUS BASE
4301 W. MAC ARTHUR BLVD., SANTA ANA, CA

HEATPUMP AND AIR CONDITIONER SCHEDULES

JOB #:
DESIGN BY: Designer
DRAWN BY: Author
CHECKED BY: Checker
DATE:
SCALE:
SHEET: M-005D

OCTA
ORANGE COUNTY TRANSPORTATION AUTHORITY
550 SOUTH MAIN STREET, ORANGE, CA

Autodesk Docs://2014233703_Santa_Ana_Bus/mech_SantaAnaBus_2014233703.rvt
5/8/2024 11:15:03 AM

IFB 4-2550 EXHIBIT B

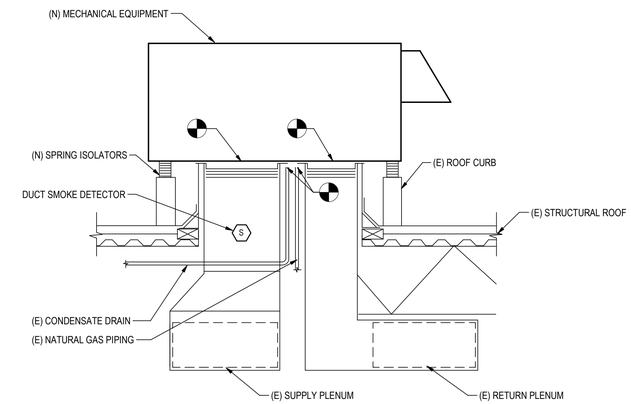

NOTES:

1. CONTRACTOR SHALL PERFORM WORK IN A MANNER SO THAT NO WARRANTIES ARE VOIDED.
2. REFER TO THE CONTRACT DOCUMENTS FOR DUCT MATERIAL AND INSULATION REQUIREMENTS.
3. THE CURB INSULATION SHALL BE EQUAL TO THE ROOF INSULATION RATING
4. COORDINATE THE LOCATION AND SIZE OF THE EQUIPMENT RAIL BASED ON THE EQUIPMENT.
5. CONTRACTOR TO REUSE EXISTING ROOF CURBS AND/OR PROVIDE NEW ROOF CURB ADAPTERS AS SPECIFIED ON THE SCHEDULES.
6. THE TOP OF THE CURB IS TO BE MOUNTED A MINIMUM OF 18 INCHES / 46 CM ABOVE THE TOP OF THE ROOF UNLESS NOTED OTHERWISE.
7. PROVIDE A HINGED FAN BASE FOR ACCESS TO THE MOTORIZED DAMPER
8. CONTRACTOR TO VERIFY EXISTING ROOF CURB IS ADEQUATE FOR NEW EQUIPMENT AND PROVIDE WITH CURB ADAPTER AS REQUIRED.

2 M-006 ROOFTOP EQUIPMENT RECONNECTION DETAIL

12" = 1'-0"

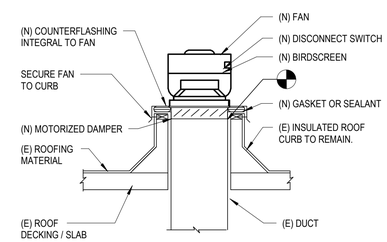

NOTES:

1. COORDINATE SCOPE OF WORK WITH ROOFING CONTRACTOR / OWNER TO NOT VOID ANY WARRANTIES.
2. CONTRACTOR IS TO REUSE EXISTING DUCT.
3. COORDINATE THE LOCATION AND SIZE OF THE EQUIPMENT RAIL BASED ON THE EQUIPMENT.
4. CONTRACTOR IS TO REUSE EXISTING INSULATED ROOF CURB AND/OR PROVIDE NEW ROOF CURB ADAPTERS AS SPECIFIED ON THE SCHEDULES.
5. THE TOP OF THE CURB IS TO BE MOUNTED A MINIMUM OF 18 INCHES / 46 CM ABOVE THE TOP OF THE ROOF UNLESS NOTED OTHERWISE.
6. PROVIDE A HINGED FAN BASE FOR ACCESS TO THE MOTORIZED DAMPER.
7. CONTRACTOR TO VERIFY EXISTING ROOF CURB IS ADEQUATE FOR NEW EQUIPMENT AND PROVIDE WITH CURB ADAPTER AS REQUIRED.

1 M-006 ROOF MOUNTED FAN RECONNECTION DETAIL

12" = 1'-0"

LICENSED PROFESSIONAL ENGINEER
SEVAN GALSTYAN
M-39730
EXP. 02/31/25
MECHANICAL
STATE OF CALIFORNIA

Stantec
801 S. Figueroa Street, Suite 300
Los Angeles, CA 90017

Copyright Reserved
The Contractor shall verify and be responsible for all dimensions. DO NOT scale the drawing, any errors or omissions shall be reported to Stantec without delay.
This drawing is the property of Stantec and shall not be reproduced in whole or in part without written permission. Reproduction or use for any purpose other than that authorized by Stantec is forbidden.

REVISION	DESCRIPTION	DATE
	100% RESUBMITTAL	5/13/2024
	100% CONSTRUCTION DRAWING SUBMITTAL	3/27/2024
	90% UPDATED CONSTRUCTION SUBMITTAL	2/13/2024
	90% CONSTRUCTION DRAWING SUBMITTAL	12/07/2023

REPLACEMENT OF MECHANICAL UNITS AT SANTA ANA BUS BASE
4301 W. MAC ARTHUR BLVD., SANTA ANA, CA

MECHANICAL DETAILS

JOB #:	
DESIGN BY:	SG
DRAWN BY:	RW
CHECKED BY:	GY
DATE:	
SCALE:	12" = 1'-0"
SHEET:	M-006D

OCTA
ORANGE COUNTY TRANSPORTATION AUTHORITY
550 SOUTH MAIN STREET, ORANGE, CA

Autodesk Docs://2014233703_Santa_Ana_Bus/mech_SantaAnaBus_2014233703.rvt

5/8/2024 11:15:03 AM

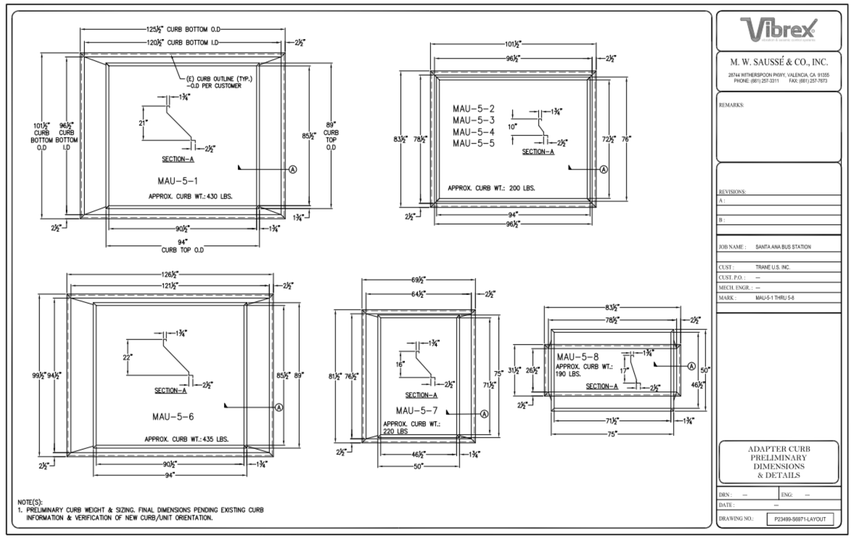

Vibrex

M. W. SAUSSÉ & CO., INC.
28744 witherspoon pkwy, valencia, ca 91355
PHONE: (661) 257-3311 FAX: (661) 257-7673

REMARKS:

REVISIONS:
A :
B :

JOB NAME : SANTA ANA BUS STATION
CUST : TRANE U.S. INC.
CUST. P.O. : —
MECH. ENGR. : —
MARK : MAU-5-1 THRU 5-8

ADAPTER CURB PRELIMINARY DIMENSIONS & DETAILS

DRN : — ENG : —
DATE : —
DRAWING NO. : P23499-59871-LAYOUT

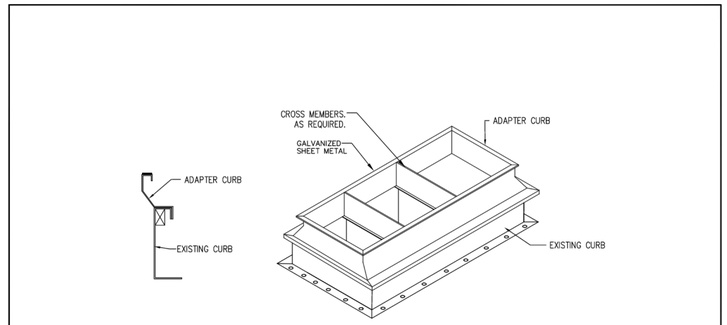

THIS IS A TYPICAL DRAWING SUBMITTED FOR APPROVAL OF TYPE ONLY. CERTIFIED DIMENSIONAL DRAWINGS ARE AVAILABLE WITH THE RECEIPT OF APPROVED EQUIPMENT SUBMITTALS.

Vibrex

TYPE : ADAPTER CURB

M. W. SAUSSÉ & CO., INC.
28744 WITHERSPOON PKWY, VALENCIA, CA 91355
PHONE: (661) 257-3311 FAX: (661) 257-7673

JOB NAME : SANTA ANA BUS STATION	REVISIONS :	DRN : KL	ENG : KL
CUST : LOS ANGELES TRANE	A :	DATE : 01/16/2024	
CUST. P.O. : —	B :	DRAWING NO. :	
MECH. ENGR. : —	C :	PREL-011624-2	
MARK : OPTION 2: MAU-5-1, 6 (MODEL 125); MAU-5-2, 3, 4, 5 (MODEL 122); MAU-5-7 (MODEL 115); MAU-5-8 (MODEL 109) (QTY. 8)			

2 M-007 MAU ROOF CURB ADAPTER DETAIL

12" = 1'-0"

MicroMetl

DATE:	WEIGHT (LBS):	DESCRIPTION:	PART NUMBER:
02/2020	182	CURB ADAPTER	CA-TRN-593-TRN-592-11

SUBMITTED TO: COMPANY: JOB NAME: APPROVED BY: DATE:

EXISTING UNIT: NEW UNIT:

CURB ADAPTER INFORMATION:

1. BEFORE ORDERING CURB ADAPTER, CONTRACTOR MUST CONFIRM THE DIMENSIONS OF THE EXISTING CURB ON THIS DRAWING

2. BEFORE NEW HVAC UNIT IS SET IN PLACE, INSPECT STRUCTURAL STABILITY OF EXISTING CURB AND BUILDING'S ROOF LOAD CAPABILITY. REINFORCE IF REQUIRED.

3. ALL CURB ADAPTERS WILL INCREASE THE SYSTEM'S EXTERNAL STATIC PRESSURE AND MUST BE INCLUDED WHEN CALCULATING UNIT REQUIREMENTS

APPROXIMATE STATIC PRESSURE LOSS AT CFM RANGE

CFM	5,000	6,700	8,400	10,000
STATIC LOSS	0.021	0.037	0.059	0.084

NOTE: STATIC PRESSURE LOSS DATA IS BASED ON SIMULATED ANALYSIS WHICH INCLUDES BOTH SUPPLY AND RETURN

FEATURES:
- FULLY WELDED HEAVY GAUGE CONSTRUCTION
- TRANSITIONS INCLUDED
- FULL INTERNAL INSULATION
- GASKET PACKAGE INCLUDED

EXISTING CURB TOP VIEW

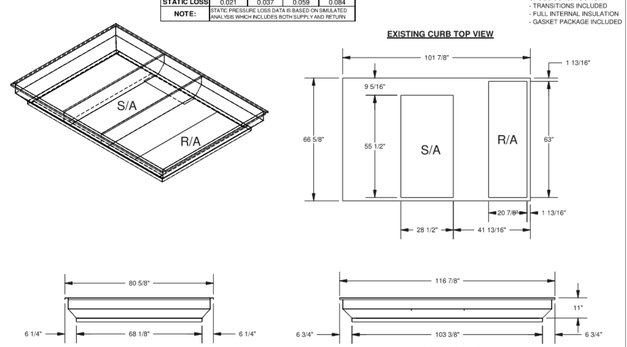

ADAPTER END VIEW

ADAPTER SIDE VIEW

NOTES:

THIS DOCUMENT IS THE PROPERTY OF MICROMETL CORPORATION AND IS DELIVERED UPON THE EXPRESS CONDITION THAT THE CONTENTS WILL NOT BE DISCLOSED OR USED WITHOUT MICROMETL'S WRITTEN CONSENT.
MANUFACTURER RESERVES THE RIGHT TO DISCONTINUE, OR CHANGE AT ANYTIME, SPECIFICATIONS & DESIGNS WITHOUT ANY NOTICE AND WITHOUT INCURRING OBLIGATIONS. COPYRIGHT MICROMETL CORPORATION 2017. ALL RIGHTS RESERVED

MICROMETL CORP * 3035 N. SHADELAND AVE., STE 300 * INDIANAPOLIS, IN 46226 * 1-800-662-4822 *** MICROMETL * 905 SOUTHERN WAY * SPARKS, NV * 1-800-884-4662 *** MICROMETL * 201 KODAK BLVD * LONGVIEW, TX 75602 * 1-903-248-4800

MicroMetl

DATE:	WEIGHT (LBS):	DESCRIPTION:	PART NUMBER:
02/2020	61	CURB ADAPTER	CA-TRN-I213-TRN-590-9

SUBMITTED TO: COMPANY: JOB NAME: APPROVED BY: DATE:

EXISTING UNIT: NEW UNIT:

CURB ADAPTER INFORMATION:

1. BEFORE ORDERING CURB ADAPTER, CONTRACTOR MUST CONFIRM THE DIMENSIONS OF THE EXISTING CURB ON THIS DRAWING

2. BEFORE NEW HVAC UNIT IS SET IN PLACE, INSPECT STRUCTURAL STABILITY OF EXISTING CURB AND BUILDING'S ROOF LOAD CAPABILITY. REINFORCE IF REQUIRED.

3. ALL CURB ADAPTERS WILL INCREASE THE SYSTEM'S EXTERNAL STATIC PRESSURE AND MUST BE INCLUDED WHEN CALCULATING UNIT REQUIREMENTS

APPROXIMATE STATIC PRESSURE LOSS AT CFM RANGE

CFM	400	800	1,200
STATIC LOSS	0.006	0.031	0.073

NOTE: STATIC PRESSURE LOSS DATA IS BASED ON SIMULATED ANALYSIS WHICH INCLUDES BOTH SUPPLY AND RETURN

FEATURES:
- FULLY WELDED HEAVY GAUGE CONSTRUCTION
- TRANSITIONS INCLUDED
- FULL INTERNAL INSULATION
- GASKET PACKAGE INCLUDED

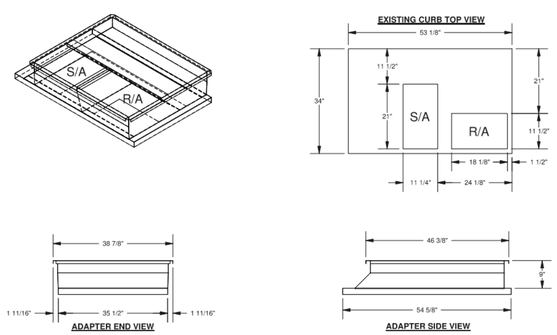

ADAPTER END VIEW

ADAPTER SIDE VIEW

NOTES:

THIS DOCUMENT IS THE PROPERTY OF MICROMETL CORPORATION AND IS DELIVERED UPON THE EXPRESS CONDITION THAT THE CONTENTS WILL NOT BE DISCLOSED OR USED WITHOUT MICROMETL'S WRITTEN CONSENT.
MANUFACTURER RESERVES THE RIGHT TO DISCONTINUE, OR CHANGE AT ANYTIME, SPECIFICATIONS & DESIGNS WITHOUT ANY NOTICE AND WITHOUT INCURRING OBLIGATIONS. COPYRIGHT MICROMETL CORPORATION 2017. ALL RIGHTS RESERVED

MICROMETL CORP * 3035 N. SHADELAND AVE., STE 300 * INDIANAPOLIS, IN 46226 * 1-800-662-4822 *** MICROMETL * 905 SOUTHERN WAY * SPARKS, NV * 1-800-884-4662 *** MICROMETL * 201 KODAK BLVD * LONGVIEW, TX 75602 * 1-903-248-4800

1 M-007 RTU ROOF CURB ADAPTER DETAIL

12" = 1'-0"

SUBMITTAL MicroMetl

WEIGHT:	DATE:	Part Number:
103 lbs	5/10	CA-TRN-I235-TRN-5750

SUBMITTED TO: JOB NAME:
COMPANY: EQUIPMENT:
DRAWN BY: NOTES:

NEW TRANE UNITS (TRN-I235)

2WCC,WCX,YCX,4TCC,TCX 3042A-3060A; 2/4YCC 3042-3060A; 4DCY,TCY 4048A-4060A; 4DCZ 6048A-6060A; 4WCZ,YCZ 6048A-6060A; 4WCC,WCX,WCY,YCX 3048A-3060A; 4YCY 4042A-4060A

EXISTING UNIT (TRN-5750)

TRANE: DCY 048F,060F; TCC 048F/F-H/G,60F/G; TCP,YCP 048G,060G; TCX,TCY,WCC,WCP,WCX,WCY 048F/G,060F/G; WCZ 060F; YCC 048F-H,060F; YCX,YCY 048F-H/G,060F-M/G; YCZ 050F,060F

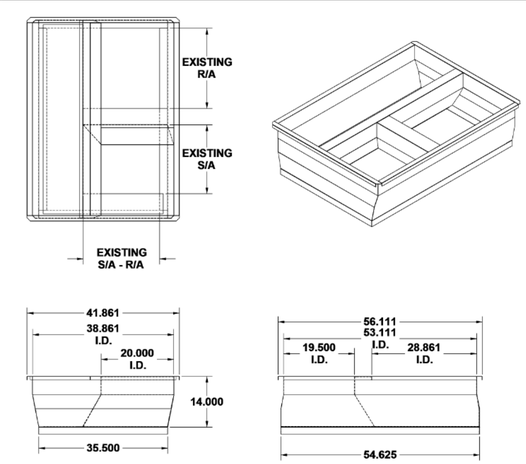

Features:
- Fully assembled curb adaptor.
- Includes internal duct transitions.
- Internally insulated with 1" - 1.5" lb insulation. Gasketing package provided.
- Adaptor pans and supports provided / field installed

Curb Adaptor Information
- To verify that the curb adaptor shown on this page is the correct adaptor for you job be sure the existing curb is the same size as the dimensions provided. (The bottom dimensions of curb adaptor are larger than existing curb outside dimension.)
- Before new HVAC unit is set in place, inspect structural stability of existing curb and building's roof load capability. Reinforce if required.
- All curb adaptors will increase the systems external static pressure and must be included when calculating unit requirements.
- Curb adaptors are designed to attach to an existing curb with side x side duct connections. The curb adaptor is not designed for use with concentric duct configuration.
- No calculations are available for this product. For a calculated product, please contact factory for part number, pricing, and lead time.
- Please contact factory for more detailed dimensional information if required. Designs are based on standard factory dimensions, and may differ in the field.

THIS DOCUMENT IS THE PROPERTY OF MICROMETL CORPORATION AND IS DELIVERED UPON THE EXPRESS CONDITION THAT THE CONTENTS WILL NOT BE DISCLOSED OR USED WITHOUT MICROMETL'S WRITTEN CONSENT. FORM NO. 6997-1P

MICROMETL CORP. - 3035 NORTH SHADELAND AVENUE, SUITE 300 - INDIANAPOLIS, IN 46226 - 1-800-662-4822 — MICROMETL SPARKS - 905 SOUTHERN WAY - SPARKS, N

LICENSED PROFESSIONAL ENGINEER SEVAK GALSTYAN M-39730 EXP. 12/31/25 MECHANICAL STATE OF CALIFORNIA

Stantec
801 S. Figueroa Street, Suite 300
Los Angeles, CA 90017

Copyright Reserved
The Contractor shall verify and be responsible for all dimensions. DO NOT scale the drawing - use dimensions or details as indicated. Report errors to Stantec without delay.
This drawing is the property of Stantec and shall not be reproduced in whole or in part without permission. Reproduction or use for any purpose other than that authorized by Stantec is forbidden.

REVISION	DESCRIPTION	DATE
	100% RESUBMITTAL	5/13/2024
	100% CONSTRUCTION DRAWING SUBMITTAL	3/27/2024
	90% UPDATED CONSTRUCTION SUBMITTAL	2/13/2024

REPLACEMENT OF MECHANICAL UNITS AT SANTA ANA BUS BASE
4301 W. MAC ARTHUR BLVD., SANTA ANA, CA

MECHANICAL DETAILS

JOB #:
DESIGN BY: SG
DRAWN BY: RW
CHECKED BY: GY
DATE:
SCALE: 12" = 1'-0"
SHEET: M-007D

OCTA
ORANGE COUNTY TRANSPORTATION AUTHORITY
550 SOUTH MAIN STREET, ORANGE, CA

Stantec

801 S. Figueroa Street, Suite 300
Los Angeles, CA 90017

Copyright Reserved
The Contractor shall verify and be responsible for all dimensions. DO NOT scale the drawing - use dimensions or contact architect regarding discrepancies. This drawing is the property of Stantec and may not be reproduced or used for any purpose other than that authorized by Stantec in writing.

REVISION	DESCRIPTION	DATE
	100% RESUBMITTAL	5/13/2024
	100% CONSTRUCTION DRAWING SUBMITTAL	3/27/2024
	90% UPDATED CONSTRUCTION SUBMITTAL	2/13/2024
	90% CONSTRUCTION DRAWING SUBMITTAL	12/07/2023

REPLACEMENT OF MECHANICAL UNITS AT SANTA ANA BUS BASE

4301 W. MAC ARTHUR BLVD., SANTA ANA, CA

MECHANICAL CONTROLS

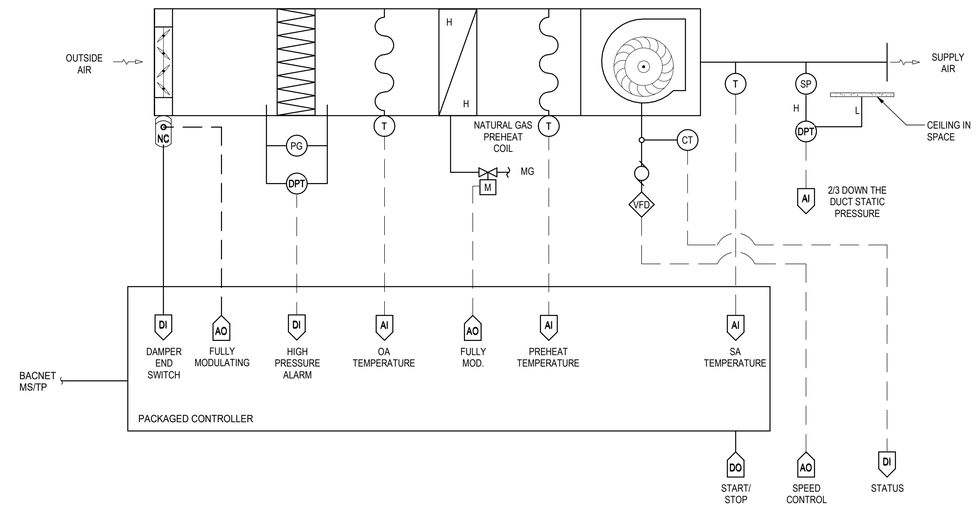

TYPICAL MAKEUP AIR UNIT

MAKEUP AIR HANDLER SEQUENCE OF OPERATION

GENERAL
1. ALL HAND-OFF-AUTO (HOA) SWITCHES NORMALLY REMAIN IN THE AUTO POSITION AND THE HAND AND OFF POSITIONS ARE USED FOR MAINTENANCE SITUATIONS. ALL SETPOINTS, DEADBANDS, AND TIME DELAY INTERVALS DESCRIBED IN SEQUENCE SHALL BE ADJUSTABLE BY SYSTEM OPERATORS. APPROPRIATE DEADBANDS AND TIME DELAYS SHALL BE USED TO PREVENT SHORT CYCLING SITUATIONS.
2. PROVIDE AND INSTALL ALL NECESSARY COMPONENTS AND ACCESSORIES FOR A COMPLETE AND OPERATIONAL SYSTEM INCLUDING, BUT NOT LIMITED TO SENSORS, RELAYS, COMMUNICATION WIRING AND CONDUIT, AND ALL NECESSARY ELECTRICAL DEVICES, WIRING, AND CONDUIT.
3. ALL MAKEUP AIR UNITS (MAU) SHALL INTERLOCK WITH EXHAUST FANS. REFER TO FLOOR PLANS FOR FURTHER DETAILS.

SCHEDULING
THE MAU SHALL HAVE SCHEDULING FUNCTIONALITY THROUGH THE DDC SYSTEM.

START UP MODE
1. UPON STARTUP OF EXHAUST FANS, DDC SHALL ISSUE COMMAND TO MAH FOR STARTUP.
2. THE OUTSIDE AIR DAMPER SHALL OPEN TO MINIMUM POSITION. THE DAMPER END-SWITCH SHALL VERIFY THAT THE DAMPER IS NOT CLOSED PRIOR TO ENERGIZING THE SUPPLY FAN.
3. THE SUPPLY FAN SHALL BE ENERGIZED.

SUPPLY FAN CONTROL
1. THE SUPPLY FAN IS ENERGIZED AND RUNS CONTINUOUSLY.
2. DDC MONITORS THE SUPPLY FAN THROUGH ITS CURRENT SENSOR. UPON A FAILURE, AN ALARM IS ISSUED.

SAFETY CONTROL
1. IF SMOKE IS DETECTED IN THE AIRSTREAM BY A DUCT SMOKE DETECTOR OR THE FIRE ALARM ZONE MODULE INDICATES A ZONE ALARM, THE SYSTEM SHALL BE DEACTIVATED

FILTER MONITORING
1. DDC SHALL MONITOR THE AIR FILTER PRESSURE DROP AND ISSUE A DIRTY FILTER ALARM UPON HIGH DIFFERENTIAL PRESSURE.

VENTILATION
1. DDC SHALL MODULATE SUPPLY FAN TO MAINTAIN A SPACE PRESSURE SET POINT.

GENERAL EXHAUST EMCS POINTS LIST

TAG	NAME/FUNCTION	AI	AO	DI	DO	REMARKS
1	EXHAUST FAN ENABLE/DISABLE				√	
2	EXHAUST FAN ALARM			√		

GENERAL EXHAUST ALARMS

DESIGNATION	POINT	PROTOCOL
EXHAUST FAN FAILURE	2	ALARM AT OPERATOR'S SYSTEM TERMINAL.

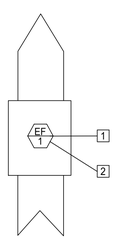

SEQUENCE OF OPERATION
APPLIES TO ALL EXHAUST FANS

OCCUPIED MODE:
EQUIPMENT SHALL OPERATE CONTINUOUSLY IN OCCUPIED (ENABLED) MODE. EF-X SHALL BE NORMALLY OFF.

1 M-008 **EXHAUST CONTROL DIAGRAM**
NOT TO SCALE

2 M-008 **CONTROL DIAGRAM - MAKEUP AIR UNIT**
NOT TO SCALE

LICENSED PROFESSIONAL ENGINEER
SELVAK GALSTIAN
M-39730
EXP. 12/31/25
MECHANICAL
STATE OF CALIFORNIA

JOB #:	
DESIGN BY:	SG
DRAWN BY:	RW
CHECKED BY:	GY
DATE:	
SCALE:	NOT TO SCALE
SHEET:	M-008D

OCTA

ORANGE COUNTY
TRANSPORTATION AUTHORITY
550 SOUTH MAIN STREET, ORANGE, CA

Autodesk Docs://2014233703_Santa_Ana_Bus/mech_SantaAnaBus_2014233703.rvt

Stantec
801 S. Figueroa Street, Suite 300
Los Angeles, CA 90017

Copyright Reserved
The Contractor shall verify and be responsible for all dimensions. DO NOT scale the drawing - any errors or omissions shall be reported to Stantec without delay.
This drawing is the property of Stantec and shall not be reproduced in whole or in part without permission. Reproduction or use for any purpose other than that authorized by Stantec is forbidden.

REVISION	DESCRIPTION	DATE
	100% RESUBMITTAL	5/13/2024
	100% CONSTRUCTION DRAWING SUBMITTAL	3/27/2024
	90% UPDATED CONSTRUCTION SUBMITTAL	2/13/2024
	90% CONSTRUCTION DRAWING SUBMITTAL	12/07/2023

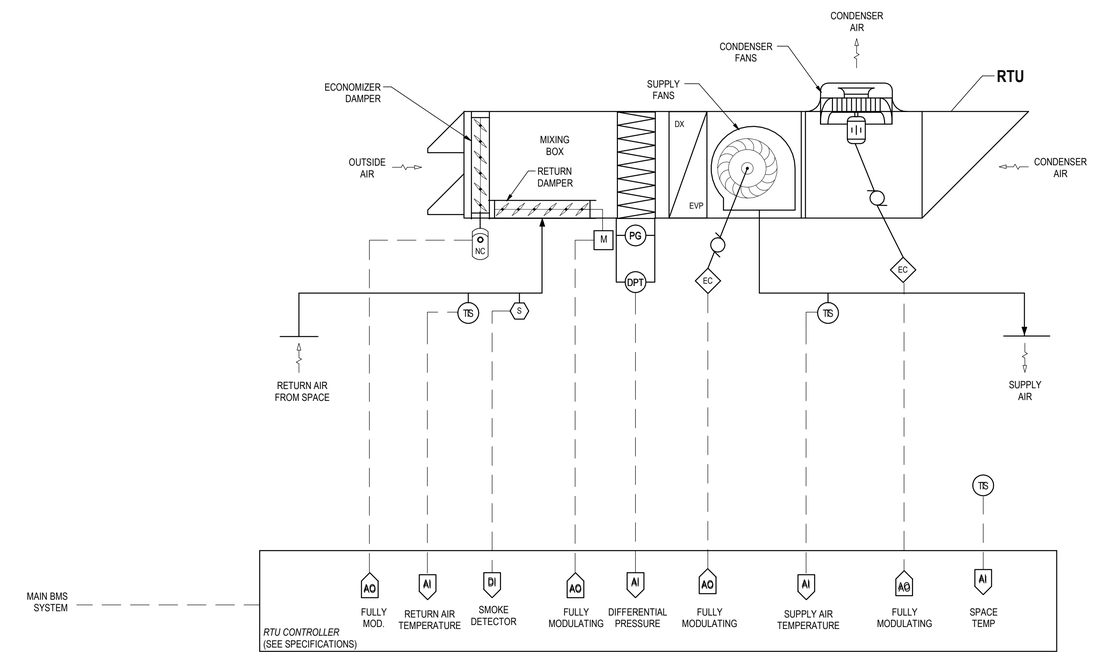

TYPICAL ROOFTOP UNIT

SEQUENCE OF OPERATION

GENERAL

1. ALL HAND-OFF-AUTO (HOA) SWITCHES NORMALLY REMAIN IN THE AUTO POSITION AND THE HAND AND OFF POSITIONS ARE USED FOR MAINTENANCE SITUATIONS. ALL SETPOINTS, DEADBANDS, AND TIME DELAY INTERVALS DESCRIBED IN SEQUENCE SHALL BE ADJUSTABLE BY SYSTEM OPERATORS. APPROPRIATE DEADBANDS AND TIME DELAYS SHALL BE USED TO PREVENT SHORT CYCLING SITUATIONS.
2. PROVIDE AND INSTALL ALL NECESSARY COMPONENTS AND ACCESSORIES FOR A COMPLETE AND OPERATIONAL SYSTEM INCLUDING, BUT NOT LIMITED TO SENSORS, RELAYS, COMMUNICATION WIRING AND CONDUIT, AND ALL NECESSARY ELECTRICAL DEVICES, WIRING, AND CONDUIT.

START-UP

1. THE ROOFTOP UNIT SHALL BE ACTIVATED BY THE MECHANICAL CONTROLLER AND SHALL RUN CONTINUOUSLY.
2. THE UNIT SHALL MONITOR AND LOG ALL SENSOR INPUTS.

SUPPLY FAN CONTROL

1. THE SUPPLY FAN IS ENERGIZED AND RUNS CONTINUOUSLY.
2. CONTROLLER SHALL MODULATE THE SUPPLY FAN SPEED BETWEEN MANUFACTURER'S ESTABLISHED RANGE TO MAINTAIN SPACE TEMPERATURE SETPOINT.
3. DDC MONITORS THE SUPPLY FAN THROUGH ITS CURRENT SENSOR. UPON A FAILURE, AN ALARM IS ISSUED.

ROOFTOP UNIT OPERATION

1. CONTROLLER SHALL PROVIDE ALL CONTROL OF SUPPLY FANS, CONDENSER FANS, MODULATING DAMPERS, COOLING COIL, REHEAT COIL, COMPRESSOR, AND ASSOCIATED COMPONENTS OF THE RTU UNIT.
2. ROOFTOP UNIT SHALL PROVIDE CONTINUOUS COOLING TO THE OFFICE SPACE BASED ON A 15-MIN AVERAGE RETURN AIR TEMPERATURE.
3. ROOFTOP UNIT SHALL PROVIDE ADJUSTABLE DISCHARGE AIR TEMPERATURE.

FILTER MONITORING

1. THE UNIT CONTROLLER SHALL MONITOR THE AIR FILTER DIFFERENTIAL PRESSURE DROP AND ISSUE A DIRTY FILTER ALARM UPON HIGH DIFFERENTIAL PRESSURE.

SAFETY CONTROL

1. IF SMOKE IS DETECTED IN THE AIRSTREAM BY A DUCT SMOKE DETECTOR OF THE FIRE ALARM ZONE MODULE INDICATES A ZONE ALARM, THE UNIT SHUTS DOWN. REFER TO SHUTDOWN MODE. IF A CONTROLLING SENSOR IS DETERMINED TO HAVE FAILED THAT WOULD DAMAGE THE EQUIPMENT OR CAUSE INAPPROPRIATE CONDITIONS IN THE SPACE, THE UNIT SHUTS DOWN. REFER TO SHUTDOWN MODE

SHUTDOWN MODE CONTROL

1. UPON A SHUTDOWN COMMAND FROM THE UNIT CONTROLLER OR A SAFETY CONTROL DEVICE COMMAND, THE UNIT COMMENCES SHUTDOWN.
2. THE SUPPLY FAN AND CONDENSER FAN ARE COMMANDED OFF.
3. THE RETURN AIR DAMPER IS MODULATES TO FULLY OPEN AND THE OUTSIDE AIR DAMPER MODULATES TO FULLY CLOSED.

SET POINTS

1. COOLING DISCHARGE AIR TEMPERATURE SETPOINT	55 F	(ADJ)
2. ROOM DIFFERENTIAL PRESSURE	+0.025 INWC	(ADJ)
3. ROOM DIFFERENTIAL PRESSURE TIME DELAY	1 MIN	(ADJ)

1 / M-009

CONTROL DIAGRAM - ROOF-MOUNTED PACKAGE UNIT WITH EXTERNAL POWERED ECONOMIZER

NOT TO SCALE

LICENSED PROFESSIONAL ENGINEER
SEVAK GALSTYAN
M-39730
EXP. 6/30/25
MECHANICAL
STATE OF CALIFORNIA

REPLACEMENT OF MECHANICAL UNITS AT SANTA ANA BUS BASE

4301 W. MAC ARTHUR BLVD., SANTA ANA, CA

MECHANICAL CONTROLS

JOB #:	
DESIGN BY:	SG
DRAWN BY:	RW
CHECKED BY:	GY
DATE:	
SCALE:	NOT TO SCALE
SHEET:	M-009D

OCTA

ORANGE COUNTY TRANSPORTATION AUTHORITY
550 SOUTH MAIN STREET, ORANGE, CA

Autodesk Docs://2014233703_Santa_Ana_Bus/mech_SantaAnaBus_2014233703.rvt
5/8/2024 11:15:04 AM

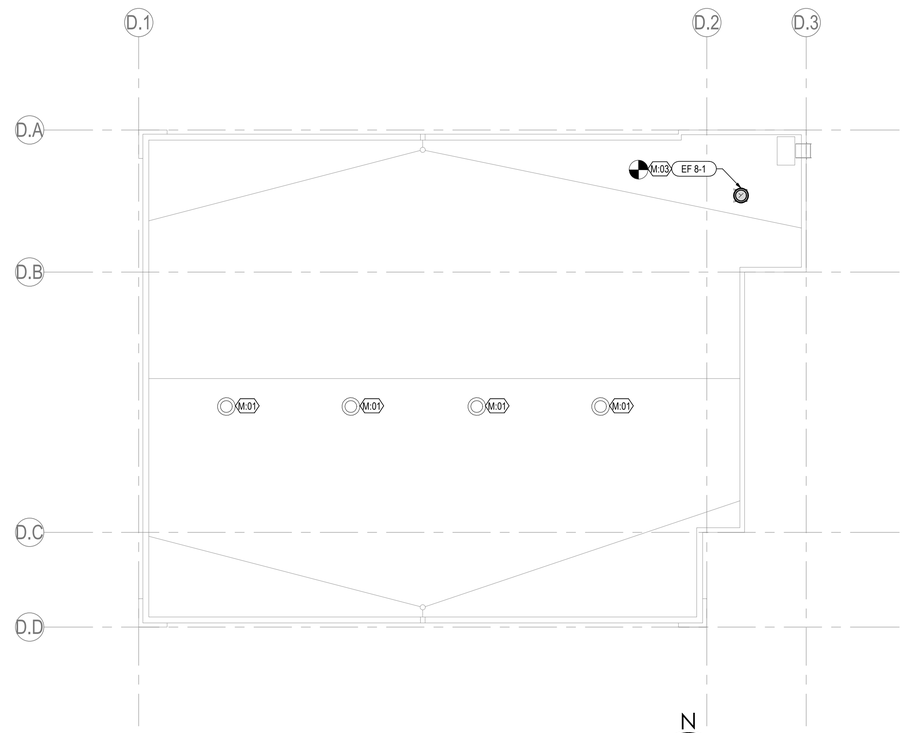

1 M-240 **DETAIL/CLEANING BUILDING MECHANICAL ROOF PLAN**
3/32" = 1'-0"

N

GENERAL NOTES

1. COORDINATE LOCATIONS OF ALL EQUIPMENT AND ROUTING OF ALL DUCTWORK AND PIPING WITH OTHER TRADES PRIOR TO ANY ROUGH-IN. PROVIDE OFFSETS AND TRANSITIONS WHERE REQUIRED TO ACCOMODATE BUILDING CONDITIONS AND PRESERVE HEADROOM.
2. INSTALL AND ROUTE CONDENSATE PIPING FOR ROOFTOP HVAC EQUIPMENT AND ROUTE AT LEAST 12 FEET AWAY FROM UNIT IN DIRECTION OF ROOF SLOPE AND ROOF DRAINS, MIN 1% PIPE SLOPE.
3. INSTALL EQUIPMENT LEVEL ON ROOF.
4. MAINTAIN MINIMUM OF 10'-0" OF HORIZONTAL DISTANCE BETWEEN BUILDING OUTDOOR AIR INTAKE AND BUILDING EXHAUST AIR AND PLUMBING VENTS.
5. EXISTING ROOF CURB AND DUCT TO BE REUSED. CONTRACTOR TO PROVIDE CURB ADAPTER FOR NEW EQUIPMENT PER SCHEDULE.

Keynote Legend

Key Value	Keynote Text
M.01	EXISTING MECHANICAL EQUIPMENT.
M.03	INSTALL NEW EXHAUST FAN AND RECONNECT TO EXISTING DUCTWORK BELOW.

Stantec
801 S. Figueroa Street, Suite 300
Los Angeles, CA 90017

Copyright Reserved
The Contractor shall verify and be responsible for all dimensions. DO NOT scale the drawing - use dimensions or written dimensions as required to fit frames without delay.
This drawing is the property of the Consultant and must be returned on request. Reproduction or use for any purpose other than that authorized by Stantec is forbidden.

REVISION	DESCRIPTION	DATE
	100% RESUBMITTAL	5/13/2024
	100% CONSTRUCTION DRAWING SUBMITTAL	3/27/2024
	90% UPDATED CONSTRUCTION SUBMITTAL	2/13/2024
	90% CONSTRUCTION DRAWING SUBMITTAL	12/07/2023

REPLACEMENT OF MECHANICAL UNITS AT SANTA ANA BUS BASE
4301 W. MAC ARTHUR BLVD., SANTA ANA, CA

DETAIL/CLEANING BUILDING MECHANICAL ROOF PLAN

JOB #:	
DESIGN BY:	SG
DRAWN BY:	RW
CHECKED BY:	GY
DATE:	
SCALE:	As indicated
SHEET:	M-240D

LICENSED PROFESSIONAL ENGINEER
SIYAR GALSTYAN
M-39730
EXP. 12/31/25
MECHANICAL
STATE OF CALIFORNIA

OCTA
ORANGE COUNTY TRANSPORTATION AUTHORITY
550 SOUTH MAIN STREET, ORANGE, CA

Autodesk Docs://2014233703_Santa_Ana_Bus/mech_SantaAnaBus_2014233703.rvt
5/8/2024 11:15:08 AM

STATE OF CALIFORNIA

Mechanical Systems

CALIFORNIA ENERGY COMMISSION

CERTIFICATE OF COMPLIANCE		NRCC-MCH-E
This document is used to demonstrate compliance for mechanical systems that are within the scope of the permit application and are demonstrating compliance using the prescriptive path outlined in 140.4, or 141.0(b)2 for alterations.		
Project Name: Santa Ana Bus Station	**Report Page:**	**(Page 1 of 9)**
Project Address: 4301 W. MacArthur Blvd, Santa Ana, CA, 92704	**Date Prepared:**	2023-12-05T15:51:16-05:00

A. GENERAL INFORMATION

01	Project Location (city)	Santa Ana, CA	04	Total Conditioned Floor Area	265000
02	Climate Zone	8	05	Total Unconditioned Floor Area	0
03	Occupancy Types Within Project:		06	# of Stories (Habitable Above Grade)	1

- All Other Occupancies

B. PROJECT SCOPE

This table Includes mechanical systems or components that are within the scope of the permit application and are demonstrating compliance using the prescriptive path outlined in 140.4, 170.2(b) or 141.0(b)2 and 180.2(b)2 for alterations.

01 Air System(s)	02 Wet System Components	03 Dry System Components
☒ Heating Air System	☐ Water Economizer	☐ Air Economizer
☒ Cooling Air System	☐ Pumps	☐ Electric Resistance Heat
Mechanical Controls	☐ System Piping	☐ Fan Systems
☒ Mechanical Controls (existing to remain, altered or new)	☐ Cooling Towers	☐ Ductwork (existing to remain, altered or new)
	☐ Chillers	☐ Ventilation
	☐ Boilers	☐ Zonal Systems/ Terminal Boxes

Generated Date/Time: Documentation Software: Energy Code Ace

CA Building Energy Efficiency Standards - 2022 Nonresidential Compliance Report Version: 2022.0.000 Schema Version: rev 20220101 Compliance ID: 162349-1223-0004 Report Generated: 2023-12-05 12:51:23

STATE OF CALIFORNIA

Mechanical Systems

CALIFORNIA ENERGY COMMISSION

CERTIFICATE OF COMPLIANCE		NRCC-MCH-E
Project Name: Santa Ana Bus Station	**Report Page:**	**(Page 2 of 9)**
	Date Prepared:	2023-12-05T15:51:16-05:00

C. COMPLIANCE RESULTS

Table C will indicate if the project data input into the compliance document is compliant with mechanical requirements. This table is not editable by the user. If this table says "DOES NOT COMPLY" or "COMPLIES with Exceptional Conditions" refer to Table D., or the table indicated as not compliant for guidance.

01		02		03		04		05		06		07		08	09
System Summary 110.1, 110.2, 140.4, 170.2(c)	AND	Pumps 140.4(k), 170.2(c)4I	AND	Fans/ Economizers 140.4(c), 140.4(e), 170.2(c)	AND	System Controls 110.2, 120.2, 140.4(f), 170.2(c)	AND	Ventilation 120.1, 160.2	AND	Terminal Box Controls 140.4(d), 170.2(c)4B	AND	Distribution 120.3, 140.4(l), 160.2, 160.3	AND	Cooling Towers 110.2(e)2	Compliance Results
(See Table F)		(See Table G)		(See Table H)		(See Table I)		(See Table J)		(See Table K)		(See Table L)		(See Table M)	
Yes	AND		AND		AND	Yes	AND		AND		AND		AND		COMPLIES
Mandatory Measures Compliance (See Table Q for Details)										COMPLIES					

D. EXCEPTIONAL CONDITIONS

This table is auto-filled with uneditable comments because of selections made or data entered in tables throughout the form.

E. ADDITIONAL REMARKS

This table includes remarks made by the permit applicant to the Authority Having Jurisdiction.

F. HVAC SYSTEM SUMMARY (DRY & WET SYSTEMS)

Space Conditioning System Information

01	02	03	04	05	06
System Name	Quantity	System Serving	System Status	Space Type	Utilizing Recovered Heat
RTU 4-1	1	Multi-zone			☐
RTU 4-2	1	Single zone	Alteration		☐
RTU 4-3	1	Single zone	Alteration		☐
RTU 4-4	1	Single zone	Alteration		☐

Generated Date/Time: Documentation Software: Energy Code Ace

CA Building Energy Efficiency Standards - 2022 Nonresidential Compliance Report Version: 2022.0.000 Schema Version: rev 20220101 Compliance ID: 162349-1223-0004 Report Generated: 2023-12-05 12:51:23

STATE OF CALIFORNIA

Mechanical Systems

CALIFORNIA ENERGY COMMISSION

CERTIFICATE OF COMPLIANCE		NRCC-MCH-E
Project Name: Santa Ana Bus Station	**Report Page:**	**(Page 3 of 9)**
	Date Prepared:	2023-12-05T15:51:16-05:00

F. HVAC SYSTEM SUMMARY (DRY & WET SYSTEMS)

Space Conditioning System Information

01	02	03	04	05	06
System Name	Quantity	System Serving	System Status	Space Type	Utilizing Recovered Heat
RTU 5-1	1	Multi-zone			☐
RTU 5-2	1	Multi-zone			☐
RTU 6-1	1	Single zone	Alteration		☐
RTU 5-3	1	Multi-zone			☐

Dry System Equipment Sizing (includes air conditioners, condensers, heat pumps, VRF, furnaces and unit heaters and DOAS systems)

01	02	03	04	05	06	07	08	09	10	11
				Equipment Sizing per Mechanical Schedule (kBtu/h) 140.4(a&b), 170.2(c)1 & 170.2(c)2						
				Heating Output[2,3]			Cooling Output[2,3]		Load Calculations[3,4]	
Name or Item Tag	Equipment Category per Tables 110.2, 140.4(a)2 and 170.2(c)3aii	Equipment Type per Tables 110.2 and Title 20	Smallest Size Available[1] 140.4(a) and 170.2(c)1	Per Design (kBtu/h)	Rated (kBtu/h)	Supp. Heating Output (kBtu/h)	Sensible Per Design (kBtu/h)	Rated (kBtu/h)	Total Heating Load (kBtu/h)	Total Sensible Cooling Load (kBtu/h)
RTU 4-1	Furnace + AC	AC, air cooled, single pkg + warm-air central furnace, gas-fired	Yes	202	202	0	125.5	178	202	180
RTU 4-2	Furnace + AC	AC, air cooled, single pkg + warm-air central furnace, gas-fired	Yes	65	65	0	74	74	65	74
RTU 4-3	Furnace + AC	AC, air cooled, single pkg + warm-air central furnace, gas-fired	Yes	121	121	0	91	118	121	118
RTU 4-4	Furnace + AC	AC, air cooled, single pkg + warm-air central furnace, gas-fired	Yes	121	121	0	119	119	121	119
RTU 5-1	Furnace + AC	AC, air cooled, split + warm-air central furnace, gas-fired	Yes	202	202	0	149	182	202	182
RTU 5-2	Furnace + AC	AC, air cooled, single pkg + warm-air central furnace, gas-fired	Yes	202	202	0	128	179	202	179

Generated Date/Time: Documentation Software: Energy Code Ace

CA Building Energy Efficiency Standards - 2022 Nonresidential Compliance Report Version: 2022.0.000 Schema Version: rev 20220101 Compliance ID: 162349-1223-0004 Report Generated: 2023-12-05 12:51:23

STATE OF CALIFORNIA

Mechanical Systems

CALIFORNIA ENERGY COMMISSION

CERTIFICATE OF COMPLIANCE		NRCC-MCH-E
Project Name: Santa Ana Bus Station	**Report Page:**	**(Page 4 of 9)**
	Date Prepared:	2023-12-05T15:51:16-05:00

F. HVAC SYSTEM SUMMARY (DRY & WET SYSTEMS)

Dry System Equipment Sizing (includes air conditioners, condensers, heat pumps, VRF, furnaces and unit heaters and DOAS systems)

01	02	03	04	05	06	07	08	09	10	11
RTU 6-1	Unitary Heat Pumps (no elec. resistance)	Air-cooled, pkg (1phase)	Yes	45	45	0	47	47	47	47
RTU 5-3	Furnace + AC	AC, air cooled, single pkg + warm-air central furnace, gas-fired	Yes	202	202	0	132	180	202	180

[1]FOOTNOTES: Equipment shall be the smallest size, within the available options of the desired equipment line, necessary to meet the design heating and cooling loads of the building per 140.4(a) and 170.2(c)1. Healthcare facilities are excepted.

[2]It is common practice to show rated output capacity on the equipment schedule. Sensible cooling output comes from specification sheet tables.

[3] If equipment is heating only, leave cooling output and load blank. If equipment is cooling only, leave heating output and load blank.

[4] Authority Having Jurisdiction may ask for load calculations used for compliance per 140.4(b) and 170.2(c).

Dry System Equipment Efficiency (other than Package Terminal Air Conditioners (PTAC) and Package Terminal Heat Pumps (PTHP), DX-DOAS and Dual Fuel Heat Pumps)

01	02	03	04	05	06	07	08	09
		Heating Mode				Cooling Mode		
Name or Item Tag	Size Category (Btu/h)	Rating Condition (°F)	Efficiency Unit	Minimum Efficiency Required per Tables 110.2 / Title 20	Design Efficiency	Efficiency Unit	Minimum Efficiency Required per Tables 110.2 / Title 20	Design Efficiency
RTU 4-1	>=135kBtuh cooling/ <225kBtuh heating		AFUE	0.8	0.81	EER IEER	10.8 14	10.8 14
RTU 4-2	>=65kBtuh cooling/ <225kBtuh heating		AFUE	0.8	0.81	EER IEER	11 14.6	11 14.6
RTU 4-3	>=65kBtuh cooling/ <225kBtuh heating		AFUE	0.8	0.81	EER IEER	11 14.6	11 14.6
RTU 4-4	>=65kBtuh cooling/ <225kBtuh heating		AFUE	0.8	0.81	EER IEER	11 14.6	11 14.6
RTU 5-1	>=135kBtuh cooling/ <225kBtuh heating		AFUE	0.8	0.81	EER IEER	10.8 14	11 14

Generated Date/Time: Documentation Software: Energy Code Ace

CA Building Energy Efficiency Standards - 2022 Nonresidential Compliance Report Version: 2022.0.000 Schema Version: rev 20220101 Compliance ID: 162349-1223-0004 Report Generated: 2023-12-05 12:51:23

STATE OF CALIFORNIA

Mechanical Systems

CALIFORNIA ENERGY COMMISSION

CERTIFICATE OF COMPLIANCE		NRCC-MCH-E
Project Name: Santa Ana Bus Station	**Report Page:**	**(Page 5 of 9)**
	Date Prepared:	2023-12-05T15:51:16-05:00

F. HVAC SYSTEM SUMMARY (DRY & WET SYSTEMS)

Dry System Equipment Efficiency (other than Package Terminal Air Conditioners (PTAC) and Package Terminal Heat Pumps (PTHP), DX-DOAS and Dual Fuel Heat Pumps)

01	02	03	04	05	06	07	08	09
		Heating Mode				Cooling Mode		
Name or Item Tag	Size Category (Btu/h)	Rating Condition (°F)	Efficiency Unit	Minimum Efficiency Required per Tables 110.2 / Title 20	Design Efficiency	Efficiency Unit	Minimum Efficiency Required per Tables 110.2 / Title 20	Design Efficiency
RTU 5-2	>=135kBtuh cooling/ <225kBtuh heating		AFUE	0.8	0.81	EER IEER	10.8 14	10.8 14
RTU 6-1	<65,000		HSPF2	6.7	7	SEER2	13.4	13.4
RTU 5-3	>=135kBtuh cooling/ <225kBtuh heating		AFUE	0.8	0.81	EER IEER	10.8 14	10.8 14

G. PUMPS

This section does not apply to this project.

H. FAN SYSTEMS & AIR ECONOMIZERS

This section does not apply to this project.

Generated Date/Time: Documentation Software: Energy Code Ace

CA Building Energy Efficiency Standards - 2022 Nonresidential Compliance Report Version: 2022.0.000 Schema Version: rev 20220101 Compliance ID: 162349-1223-0004 Report Generated: 2023-12-05 12:51:23

STATE OF CALIFORNIA

Mechanical Systems

CALIFORNIA ENERGY COMMISSION

CERTIFICATE OF COMPLIANCE		NRCC-MCH-E
Project Name: Santa Ana Bus Station	**Report Page:**	**(Page 6 of 9)**
	Date Prepared:	2023-12-05T15:51:16-05:00

I. SYSTEM CONTROLS

This table is used to demonstrate compliance with mandatory controls in 110.2 and 120.2 and prescriptive controls in 140.4(f) and (n), 170.2(c)4D 170.2(c)4L or requirements in 141.0(b)2E 180.2(b)2 for altered space conditioning systems.

01	02	03	04	05	06	07	08	09
System Name	System Zoning	Conditioned Floor Area Being Served (ft^2)	Thermostats 110.2(b) & (c)[1], 120.2(a) 160.3(a)2A or 141.0(b)2E & 180.2(b)2	Shut-Off Controls 120.2(e) & 160.3(a)2D	Isolation Zone Controls 120.2(g) & 160.3(a)2F	Demand Response 110.12 120.2(b) & 160.3(a)2B	Supply Air Temp. Reset 140.4(f) & 170.2(c)4D	Window Interlocks per 140.4(n) & 170.2(c)4D
BMS	Multi-zone	> 25,000 ft^2	EMCS	EMCS	EMCS	EMCS	Included	NA: No operable windows

[1]FOOTNOTES: Gravity gas wall heaters, gravity floor heaters, gravity room heaters, non-central electric heaters, fireplaces or decorative gas appliances, wood stoves are not required to have setback thermostats.

J. VENTILATION AND INDOOR AIR QUALITY

This section does not apply to this project.

K. TERMINAL BOX CONTROLS

This section does not apply to this project.

L. DISTRIBUTION (DUCTWORK and PIPING)

This section does not apply to this project.

M. COOLING TOWERS

This section does not apply to this project.

Generated Date/Time: Documentation Software: Energy Code Ace

CA Building Energy Efficiency Standards - 2022 Nonresidential Compliance Report Version: 2022.0.000 Schema Version: rev 20220101 Compliance ID: 162349-1223-0004 Report Generated: 2023-12-05 12:51:23

Stantec
801 S. Figueroa Street, Suite 300
Los Angeles, CA 90017

Copyright Reserved

REVISION	DESCRIPTION	DATE
	100% RESUBMITTAL	5/13/2024
	100% CONSTRUCTION DRAWING SUBMITTAL	3/27/2024
	90% UPDATED CONSTRUCTION SUBMITTAL	2/13/2024
	90% CONSTRUCTION DRAWING SUBMITTAL	12/07/2023

REPLACEMENT OF MECHANICAL UNITS AT SANTA ANA BUS BASE
4301 W. MAC ARTHUR BLVD., SANTA ANA, CA

TITLE 24 CODE COMPLIANCE

JOB #:
DESIGN BY: SG
DRAWN BY: RW
CHECKED BY: GY
DATE:
SCALE:
SHEET: **M-300 D**

LICENSED PROFESSIONAL ENGINEER SEVAK GALSTYAN M 39730 EXP. 12/31/25 MECHANICAL STATE OF CALIFORNIA

OCTA
ORANGE COUNTY TRANSPORTATION AUTHORITY
550 SOUTH MAIN STREET, ORANGE, CA

Autodesk Docs://2014233703_Santa_Ana_Bus/mech_SantaAnaBus_2014233703.rvt

5/8/2024 11:15:08 AM

STATE OF CALIFORNIA
Mechanical Systems
CALIFORNIA ENERGY COMMISSION

CERTIFICATE OF COMPLIANCE		NRCC-MCH-E
Project Name: Santa Ana Bus Station	Report Page:	(Page 7 of 9)
	Date Prepared:	2023-12-05T15:51:16-05:00

N. DECLARATION OF REQUIRED CERTIFICATES OF INSTALLATION

Selections have been made based on information provided in previous tables of this document. If any selection needs to be changed, please explain why in Table E Additional Remarks. These documents must be provided to the building inspector during construction and can be found online at https://www.energy.ca.gov/programs-and-topics/programs/building-energy-efficiency-standards/2022-building-energy-efficiency-4

Form/Title
NRCI-MCH-01-E - Must be submitted for all buildings

O. DECLARATION OF REQUIRED CERTIFICATES OF ACCEPTANCE

Selections have been made based on information provided in previous tables of this document. If any selection needs to be changed, please explain why in Table E Additional Remarks. These documents must be provided to the building inspector during construction and can be found online at https://www.energy.ca.gov/title24/2019standards/2019_compliance_documents/Nonresidential_Documents/NRCA/

Form/Title	Systems/Spaces To Be Field Verified
NRCA-MCH-16-A Supply Air Temperature Reset Controls	BMS
NRCA-MCH-18-A Energy Management Control Systems	BMS

P. DECLARATION OF REQUIRED CERTIFICATES OF VERIFICATION

There are no NRCV forms required for this project.

STATE OF CALIFORNIA
Mechanical Systems
CALIFORNIA ENERGY COMMISSION

CERTIFICATE OF COMPLIANCE		NRCC-MCH-E
Project Name: Santa Ana Bus Station	Report Page:	(Page 8 of 9)
	Date Prepared:	2023-12-05T15:51:16-05:00

Q. MANDATORY MEASURES DOCUMENTATION LOCATION

This table is used to indicate where mandatory measures are documented in the plan set or construction documentation.

01		02
Compliance with Mandatory Measures documented through MCH Mandatory Measures Note Block	No	Plan sheet or construction document location
03		04
Mandatory Measure		**Plan sheet or construction document location**
Heating Equipment Efficiency per 110.1		M-004 MECHANICAL SCHEDULES
Cooling Equipment Efficiency per 110.1		M-004 MECHANICAL SCHEDULES
Furnace Standby Loss Control per 110.2(d)		M-004 MECHANICAL SCHEDULES
Heat Pump with Supplemental electric Resistance Heater Controls per 110.2(b)		N/A

STATE OF CALIFORNIA
Mechanical Systems
CALIFORNIA ENERGY COMMISSION

CERTIFICATE OF COMPLIANCE		NRCC-MCH-E
Project Name: Santa Ana Bus Station	Report Page:	(Page 9 of 9)
Project Address: 4301 W. MacArthur Blvd, Santa Ana, CA, 92704	Date Prepared:	2023-12-05T15:51:16-05:00

DOCUMENTATION AUTHOR'S DECLARATION STATEMENT

I certify that this Certificate of Compliance documentation is accurate and complete.

Documentation Author Name: Ryan Walsh	Documentation Author Signature: Walsh, Ryan
Company: stantec	Signature Date: 12/5/2023
Address: 6385 Corporate Drive, Suite 200	CEA/ HERS Certification Identification (if applicable):
City/State/Zip: Colorado Springs, CO 80919	Phone: 860-964-0406

RESPONSIBLE PERSON'S DECLARATION STATEMENT

I certify the following under penalty of perjury, under the laws of the State of California:

1. The information provided on this Certificate of Compliance is true and correct.
2. I am eligible under Division 3 of the Business and Professions Code to accept responsibility for the building design or system design identified on this Certificate of Compliance (responsible designer)
3. The energy features and performance specifications, materials, components, and manufactured devices for the building design or system design identified on this Certificate of Compliance conform to the requirements of Title 24, Part 1 and Part 6 of the California Code of Regulations.
4. The building design features or system design features identified on this Certificate of Compliance are consistent with the information provided on other applicable compliance documents, worksheets, calculations, plans and specifications submitted to the enforcement agency for approval with this building permit application.
5. I will ensure that a completed signed copy of this Certificate of Compliance shall be made available with the building permit(s) issued for the building, and made available to the enforcement agency for all applicable inspections. I understand that a completed signed copy of this Certificate of Compliance is required to be included with the documentation the builder provides to the building owner at occupancy.

Responsible Designer Name: Ryan Walsh	Responsible Designer Signature: Walsh, Ryan
Company: stantec	Date Signed: 12/5/2023
Address: 6385 Corporate Drive, Suite 200	License: N/A
City/State/Zip: Colorado Springs, CO 80919	Phone: 860-964-0406

LICENSED PROFESSIONAL ENGINEER
SIYAR GALSTYAN
M-39730
EXP. 12/31/25
MECHANICAL
STATE OF CALIFORNIA

IFB 4-2550 EXHIBIT B

Stantec
801 S. Figueroa Street, Suite 300
Los Angeles, CA 90017

Copyright Reserved
The Contractor shall verify and be responsible for all dimensions. DO NOT scale the drawing - use dimensions as indicated or required by Stantec without delay.
This drawing is the property of Stantec and shall not be reproduced in whole or in part. Reproduction or use for any purpose other than that authorized by Stantec is forbidden.

REVISION	DESCRIPTION	DATE
	100% RESUBMITTAL	5/13/2024
	100% CONSTRUCTION DRAWING SUBMITTAL	3/27/2024
	90% UPDATED CONSTRUCTION SUBMITTAL	2/13/2024
	90% CONSTRUCTION DRAWING SUBMITTAL	12/07/2023

REPLACEMENT OF MECHANICAL UNITS AT SANTA ANA BUS BASE
4301 W. MAC ARTHUR BLVD., SANTA ANA, CA

TITLE 24 CODE COMPLIANCE

JOB #:	
DESIGN BY:	SG
DRAWN BY:	RW
CHECKED BY:	GY
DATE:	
SCALE:	
SHEET:	M-301D

OCTA
ORANGE COUNTY TRANSPORTATION AUTHORITY
550 SOUTH MAIN STREET, ORANGE, CA

Autodesk Docs://2014233703_Santa_Ana_Bus/mech_SantaAnaBus_2014233703.rvt
5/8/2024 11:15:08 AM

CIRCUITS
EMERGENCY NORMAL

RECEPTACLES

- SINGLE RECEPTACLE, 120V
- SINGLE RECEPTACLE, 120V, CEILING MOUNTED
- DUPLEX RECEPTACLE, 120V
- DUPLEX RECEPTACLE, 120V, CEILING MOUNTED
- DOUBLE DUPLEX RECEPTACLE, 120V
- DOUBLE DUPLEX RECEPTACLE, 120V, CEILING MOUNTED
- SPLIT WIRED RECEPTACLE, 120V, TOP CONTROLLED, BOTTOM CONSTANTLY ENERGIZED
- RECEPTACLE, NEMA #
- RECEPTACLE, NEMA #, CEILING MOUNTED
- COMBINATION RECEPTACLE, NEMA # AND 120V
- FURNITURE SYSTEMS RECEPTACLE, 120V
- N/A INDICATES FULLY CONTROLLED
- N/A INDICATES 15A
- N/A INDICATES TWIST LOCK
- N/A INDICATES MOUNTED ABOVE COUNTER BACKSPLASH
- N/A MULTI-SERVICE ASSEMBLY (RECEPTACLES AS INDICATED)
- N/A MULTI-SERVICE CEILING BOX (RECEPTACLES AS INDICATED)
- N/A MULTI-SERVICE FLOOR BOX (RECEPTACLES AS INDICATED)
- N/A MULTI-SERVICE FURNITURE BOX (RECEPTACLES AS INDICATED)
- N/A MULTI-SERVICE POKE THRU (RECEPTACLES AS INDICATED)
- N/A MULTI-SERVICE POWER POLE (RECEPTACLES AS INDICATED)
- N/A MULTI-SERVICE WALL BOX (RECEPTACLES AS INDICATED)
- N/A PLUG STRIP (HORIZONTAL/VERTICAL)
- N/A CLOCK RECEPTACLE, 120V
- CORD DROP, 120V
- CEILING CORD DROP, 120V

RECEPTACLE TYPES

- A ARC FAULT CIRCUIT INTERRUPTER
- AT ARC FAULT CIRCUIT INTERRUPTER AND TAMPER RESISTANT
- D DEDICATED CIRCUIT
- G GROUND FAULT CIRCUIT INTERRUPTER
- GT GROUND FAULT CIRCUIT INTERRUPTER AND TAMPER RESISTANT
- IG ISOLATED GROUND
- S SURGE PROTECTOR
- T TAMPER RESISTANT
- U INTEGRAL USB PORT(S)
- WP WEATHER RESISTANT COVER

CONTROLS

- NON-FUSED SAFETY SWITCH
- FUSED SAFETY SWITCH, FUSE RATING INDICATED
- COMBINATION MOTOR STARTER AND FUSED SAFETY SWITCH, FUSE RATING INDICATED
- MOTOR STARTER
- MANUAL MOTOR STARTER
- AUTOMATIC DOOR PUSHPLATE
- DEAD FRONT GFCI
- EMERGENCY SHUTDOWN
- ENCLOSED CIRCUIT BREAKER
- ENCLOSED CONTACTOR
- PUSH BUTTON CONTROL STATION
- $M TOGGLE SWITCH, MOTOR RATED
- TOUCHLESS AUTOMATIC DOOR OPENER
- DDC DIRECT DIGITAL CONTROL PANEL
- R RELAY
- T THERMOSTAT
- TC TIME CLOCK
- VFD VARIABLE FREQUENCY DRIVE

WORK DEFINITION

- NEW WORK
- EXISTING
- REMOVE EXISTING
- REMOVE EXISTING ELECTRICAL EQUIPMENT
- FUTURE
- TEMPORARY, AS NOTED
- ?-## KEY NOTE
- ??? EQUIPMENT IDENTIFICATION
- XX X-X MECHANICAL EQUIPMENT IDENTIFICATION

RACEWAYS

- RACEWAY CONCEALED IN CEILING OR WALL. EXPOSED RACEWAY IS ALLOWED ONLY WHERE NOTED.
- RACEWAY BELOW SLAB OR UNDERGROUND
- RACEWAY UP
- RACEWAY DOWN
- RACEWAY CONTINUATION
- RACEWAY STUB-OUT WITH BUSHING
- SURFACE RACEWAY (HORIZONTAL/VERTICAL)
- J JUNCTION BOX, CEILING OR ABOVE CEILING MOUNTED
- J JUNCTION BOX, WALL MOUNTED
- J JUNCTION BOX, IN-GROUND
- PB PULL BOX

ELECTRICAL EQUIPMENT

- 208V OR 240V POWER PANELBOARD
- 480V OR 600V POWER PANELBOARD
- EQUIPMENT CABINET OR PANEL
- EQUIPMENT CONNECTION, FILL INDICATES EMERGENCY CIRCUIT
- GROUND BAR
- MOTOR CONNECTION, 1Ø
- MOTOR CONNECTION, 3Ø
- BUS DUCT
- ATS AUTOMATIC TRANSFER SWITCH
- B BUS DUCT PLUG
- SPD SURGE PROTECTIVE DEVICE
- T TRANSFORMER, NOT TO SCALE
- TRANSFORMER, DRAWN TO SCALE

ABBREVIATIONS

#/C	MULTI-CONDUCTOR, # INDICTATES QUANTITY
(D)	DEMOLISH
(E)	EXISTING
(N)	NEW
(R)	EXISTING TO BE RELOCATED
1/C	SINGLE CONDUCTOR
A	AMPS
A/C	AIR CONDITIONING UNIT
AC	ALTERNATING CURRENT
ACH	ABOVE COUNTER HEIGHT
ACT	ACOUSTICAL CEILING TILE
ADA	AMERICANS WITH DISABILITIES ACT
ADJ	ADJUSTABLE
AF	AMP FRAME
AFC	ABOVE FINISHED CEILING
AFCI	ARC FAULT CIRCUIT INTERRUPTER
AFF	ABOVE FINISHED FLOOR
AFG	ABOVE FINISHED GRADE
AHJ	AUTHORITY HAVING JURISDICTION
AHU	AIR HANDLING UNIT
AIC	AMPERE INTERRUPTING CAPACITY
AL	ALUMINUM
ALD	ASSISTED LISTENING DEVICE
ALT	ALTERNATE
ARCH	ARCHITECTURAL
AS	AMP SWITCH
AT	AMP TRIP
ATS	AUTOMATIC TRANSFER SWITCH
AUTO	AUTOMATIC
AV	AUDIO VISUAL
AVG	AVERAGE
AWG	AMERICAN WIRE GAUGE
BC	BONDING CONDUCTOR
BCU	BARE COPPER
BFC	BELOW FINISHED CEILING
BFG	BELOW FINISHED GRADE
BKR	BREAKER
BLDG	BUILDING
BOF	BOTTOM OF FIXTURE
BOH	BACK OF HOUSE
BTM	BOTTOM
C	CONDUIT
C/W	COMPLETE WITH
CAP	CAPACITY
CATV	COMMUNITY ANTENNA TELEVISION
CB	CIRCUIT BREAKER
CCTV	CLOSED CIRCUIT TELEVISION
CEC	CANADIAN ELECTRIC CODE
CFOI	CONTRACTOR FURNISHED, OWNER INSTALLED
CIRC	CIRCULATING
CKT	CIRCUIT
CL	CENTERLINE
CLG	CEIILING
CM	CEIILING MOUNTED
CMU	CONCRETE MASONRY UNIT
CO	CONDUIT ONLY
COMM	COMMUNICATIONS
CONC	CONCRETE
CONN	CONNECTION
CONST	CONSTRUCTION
CONT	CONTINUOUS
CONTR	CONTRACTOR
CPT	CONTROL POWER TRANSFORMER
CPU	CENTRAL PROCESSING UNIT
CR	CRITICAL BRANCH
CT	CURRENT TRANSFORMERS
CTR	CENTER
CU	COPPER
CUH	CABINET UNIT HEATER
D	DEDICATED
DALI	DIGITAL ADDRESSABLE LIGHTING INTERFACE
DC	DIRECT CURRENT
DET	DETAIL
DIA	DIAMETER
DIM	DIMENSION
DISC	DISCONNECT
DIV	DIVISION
DL	DAMP LOCATION
DMX	DIGITAL MULTIPLEX
DMX-RDM	DIGITAL MULTIPLEX REMOTE DEVICE MANAGEMENT
DN	DOWN
DP	DISTRIBUTION PANEL
DPDT	DOUBLE POLE, DOUBLE THROW
DPR	DAMPER
DPST	DOUBLE POLE, SINGLE THROW
DWG	DRAWING
DWH	DOMESTIC WATER HEATER
EA	EACH
EC	ELECTRICAL CONTRACTOR
EF	EXHAUST FAN
ELEC	ELECTRICAL
ELEV	ELEVATOR
EM	EMERGENCY
EM GEN	EMERGENCY GENERATOR
EMT	ELECTRICAL METALLIC TUBING
ENCL	ENCLOSURE
EP	ELECTRIC-PNEUMATIC
EPO	EMERGENCY POWER OFF
EQ	EQUIPMENT BRANCH
EQUIP	EQUIPMENT

ABBREVIATIONS

ETD	EMERGENCY TRANSFER DEVICE
EWC	ELECTRIC WATER COOLER
EXH	EXHAUST
EXP	EXPLOSION PROOF
EXTER	EXTERIOR
F&I	FURNISHED AND INSTALLED
FA	FIRE ALARM
FAA	FIRE ALARM ANNUNCIATOR
FACP	FIRE ALARM CONTROL PANEL
FB	FLOOR BOX
FCU, FC	FAN COIL UNIT
FLR	FLOOR
FLUOR	FLUORESCENT
FO	FIBER (FIBRE) OPTIC
FOH	FRONT OF HOUSE
FP	FIRE PROTECTION
FPC	FORWARD PHASE CONTROL
FS	FUSIBLE SWITCH
FSCS	FIRE FIGHTER SMOKE CONTROL STATION
FU	FUSE
FVNR	FULL VOLTAGE NON REVERSING
FVR	FULL VOLTAGE REVERSING
G, GND	GROUND
G/Y	GREEN YELLOW
GA	GAUGE
GAL	GALLONS
GC	GENERAL CONTRACTOR
GEN	GENERATOR
GFI, GFCI	GROUND FAULT (CIRCUIT) INTERRUPTER
H	HOT CONDUCTOR
HC	HORIZONTAL CROSS CONNECT
HD	HAND DRYER
HFF	HANDS FREE FIXTURE
HH	HANDHOLE
HID	HIGH INTENSITY DISCHARGE
HK	HOUSE KEEPING PAD
HM	HORIZONTALLY MOUNTED
HOA	HAND-OFF-AUTO
HOR	HORIZONTAL
HP	HEAT PUMP
HP	HORSEPOWER
HT	HEATING
HV	HIGH VOLTAGE
HVCB	HIGH VOLTAGE CIRCUIT BREAKER
HW	HOT WATER
HZ	HERTZ
IC	INTERMEDIATE CROSS CONNECT
ID	INSIDE DIAMETER
IDF	INTERMEDIATE DISTRIBUTION FRAME
IG	ISOLATED GROUND
IMC	INTERMEDIATE METAL CONDUIT
INST	INSTANTANEOUS
IP	INTERNET PROTOCOL
JB	JUNCTION BOX
K	KIRK KEY INTERLOCK
KAIC	KILO-AMPS INTERRUPTING CAPACITY
KV	KILOVOLT
KVA	KILOVOLT-AMPERES
KW	KILOWATT
LED	LIGHT EMITTING DIODE
LR	LEGALLY REQUIRED
LS	LIFE SAFETY BRANCH
LSIG	LONG TIME, SHORT TIME, INSTANTANEOUS, GROUND FAULT LIGHTING
LTG	LIGHTING
LV	LOW VOLTAGE
MAU	MAKE UP AIR UNIT
MAX	MAXIMUM
MC	METAL CLAD CABLE
MCA	MINIMUM CIRCUIT AMPS
MCB	MAIN CIRCUIT BREAKER
MCC	MOTOR CONTROL CENTER
MCCB	MOLDED CASE CIRCUIT BREAKER
MCP	MOTOR CIRCUIT PROTECTOR
MCT	MAIN CROSS CONNECT
MDF	MAIN DISTRIBUTION FRAME
MDP	MAIN DISTRIBUTION PANEL
MECH	MECHANICAL
MET	MAIN EARTHING TERMINAL
MFR	MANUFACTURER
MH	MANHOLE
MIN	MINIMUM
MISC	MISCELLANEOUS
MLO	MAIN LUG ONLY
MM	MULTIMODE FIBER (FIBRE) OPTIC STRAND
MSB	MAIN SWITCHBOARD
MTD	MOUNTED
MTG	MOUNTING
MTS	MAIN TERMINAL SPACE
MV	MEDIUM VOLTAGE
MVCB	MEDIUM VOLTAGE CIRCUIT BREAKER
MW	MICROWAVE OVEN
N	NEUTRAL
NAC	NOTIFICATION APPLIANCE CIRCUIT
NC	NORMALLY CLOSED
NEC	NATIONAL ELECTRIC CODE
NEMA	NATIONAL ELECTRICAL MANUFACTURERS ASSOCIATION

ABBREVIATIONS

NIC	NOT IN CONTRACT
NL	NIGHT LIGHT
NO	NORMALLY OPEN
NTS	NOT TO SCALE
OC	ON CENTER
OD	OUTSIDE DIAMETER
OFCI	OWNER FURNISHED, CONTRACTOR INSTALLED
OFE	OWNER FURNISHED EQUIPMENT
OH	OVERHEAD
OL	OVERLOAD
OS	OCCUPANCY SENSOR, OPTIONAL STANDBY
OSP	OUTSIDE PLANT
P	POLE
PA	PUBLIC ADDRESS
PB	PULL BOX
PD	PUNCHDOWN
PF	POWER FACTOR
PNL	PANEL
POE	POINT OF ENTRANCE
POS	POINT OF SERVICE
PR	PAIR
PT	POTENTIAL TRANSFORMERS
PTS	PNEUMATIC TUBE STATION
PTZ	PAN/TILT/ZOOM
PV	PHOTOVOLTAIC
PVC	POLYVINYL CHLORIDE
PWR	POWER
RA	RETURN AIR
REC	RECESSED
RECP	RECEPTACLE
REQD	REQUIRED
REX	REQUEST TO EXIT
RM	ROOM
RNC	RIGID NON-METALLIC CONDUIT
RO	RACEWAY ONLY
RPC	REVERSE PHASE CUT
RSC, RGS	RIGID STEEL CONDUIT
SCCR	SHORT CIRCUIT CURRENT RATING
SEC	SECURITY
SECT	SECTION
SIM	SIMILAR
SM	SINGLE MODE FIBER OPTIC STRAND
SMR	SURFACE MOUNTED RACEWAY
SPD	SURGE PROTECTED DEVICE
SPDT	SINGLE POLE DOUBLE THROW
SPECS	SPECIFICATIONS
SPST	SINGLE POLE SINGLE THROW
SS	STAINLESS STEEL
ST	SHUNT TRIP
STD	STANDARD
SW	SWITCH
SWBD	SWITCHBOARD
SWGR	SWITCHGEAR
SYS	SYSTEM
TBB	TELECOMMUNICATIONS BACKBONE
TC	TEMPERATURE CONTROL OR TERMINAL CABINET
TE	TELECOMMUNICATIONS ENCLOSURE
TELE	TELEPHONE
TELECOM	TELECOMMUNICATIONS
TEMP	TEMPERATURE
TERM	TERMINAL
TGB	TELECOMMUNICATIONS GROUND BAR
TMGB	TELECOMMUNICATIONS MAIN GROUND BAR
TOF	TOP OF FIXTURE
TP	TAMPER RESISTANT
TR	TELECOMMUNICATIONS ROOM
TSP	TWISTED SHIELDED PAIR
TSTAT	THERMOSTAT
TTB	TELECOM TERMINAL BOARD
TV	TELEVISION
TYP	TYPICAL
UG	UNDERGROUND
UH	UNIT HEATER
UNO	UNLESS NOTED OTHERWISE
UNV	UNIVERSAL VOLTAGE
UPS	UNINTERRUPTIBLE POWER SUPPLY
USB	UNIVERSAL SERIAL BUS
UTP	UNSHIELDED TWISTED PAIR
UV	UNIT VENTILATOR
V	VOLTS
VA	VOLT-AMPS
VAV	VARIABLE AIR VOLUME
VC	VOLUME CONTROL
VDT	VISUAL DISPLAY TERMINAL
VERT	VERTICAL
VFD	VARIABLE FREQUENCY DRIVE
VIF	VERIFY IN FIELD
VOL	VOLUME
VT	VAPOR TIGHT
W	WIRE, WATT
WAP	WIRELESS ACCESS POINT
WG	WIREGUARD
WL	WET LOCATION
WP	WEATHERPROOF
WT	WATERTIGHT
XFMR	TRANSFORMER
Ø, PH	PHASE

PROJECT NOTES

1. THE ELECTRICAL CONTRACTOR SHALL OBTAIN ALL NECESSARY PERMITS FROM AUTHORITIES HAVING JURISDICTION AND PAY ALL ASSOCIATED FEES.
2. LOCATE JUNCTION AND PULL BOXES AS REQUIRED TO ALLOW ACCESS AFTER EQUIPMENT AND APPURTENANCES ARE INSTALLED. COORDINATE EXACT LOCATIONS WITH THE OTHER TRADES. COORDINATE LOCATIONS AND ELEVATIONS OF ELECTRICAL DEVICES WITH DRAWINGS AND OTHER TRADES PRIOR TO INSTALLATION.
3. PROTECT PERMANENT BUILDING FINISHES FROM DAMAGE DURING CONSTRUCTION PERIOD. PROVIDE PLYWOOD OR SIMILAR MATERIAL UNDER EQUIPMENT OR MATERIALS STORED ON FLOORS, AND IN AREAS WHERE CONSTRUCTION MAY DAMAGE FINISHES. SURFACES OR FINISHES DAMAGED DURING CONSTRUCTION SHALL BE REPLACED AT THE COST OF THE CONTRACTOR AT FAULT.
4. CONTRACTORS SHALL COORDINATE LOCATIONS OF FIXTURES AND ELECTRICAL DEVICES INSTALLED IN OR ON THE CEILING WITH ARCHITECTURAL REFLECTED CEILING PLAN. CEILING MOUNTED ELECTRICAL DEVICES SHALL BE MOUNTED IN THE CENTER OF THE CEILING TILES, UNLESS OTHERWISE NOTED.
5. WHERE DIRECTED TO USE OR RETAIN EXISTING CIRCUITS, AND THE CIRCUIT NUMBERS DIFFER FROM THE DRAWING, UPDATE DIRECTORIES AND RECORD DRAWINGS.
6. PROPERLY SUPPORT PER CODE LOW VOLTAGE CABLING NOT IN CONDUIT. IN AREAS SUCH AS CORRIDORS DESIGNATED FOR NEW CEILINGS AND FINISHES, SUPPORT EXISTING ELECTRICAL DEVICES AND EQUIPMENT IN AND ABOVE THE CEILING, INCLUDING CONDUIT AND CABLING. PROVIDE PROPER PERMANENT SUPPORT AS NEEDED TO COMPLY WITH CODE AND TAKE WEIGHT OFF CEILING SUPPORTS. REMOVE AND REINSTALL ELECTRICAL DEVICES AND EQUIPMENT AS NEEDED FOR PAINTING, WALL COVERINGS, CEILINGS, AND FINISH WORK. REFER TO ARCHITECTURAL DRAWINGS. LOW VOLTAGE CABLING LOCATED IN EXPOSED STRUCTURE (CEIILING) AREAS SHALL BE INSTALLED IN CONDUIT (OR CABLE TRAY, IF APPLICABLE) AND ROUTED TIGHT TO DECK. INSTALLATIONS NOT IN COMPLIANCE WITH THIS REQUIREMENT SHALL BE REMOVED AND REINSTALLED AT CONTRACTOR'S EXPENSE.
7. WHERE PROJECT PHASING IS INDICATED IN ANY PART OF THE WORKING DOCUMENT PACKAGE, ELECTRICAL CONTRACTOR IS TO PLAN WORK SO AS TO FACILITATE SUCH PHASING.
8. FOR BRANCH CIRCUITS OVER 75' (25 METERS) IN LENGTH (TOTAL ONE WAY) FROM THE PANEL, THE ELECTRICAL CONTRACTOR SHALL CALCULATE THE VOLTAGE DROP AND PROVIDE AN APPROPRIATE CONDUCTOR SIZE TO ACHIEVE NO MORE THAN 3% MAXIMUM ALLOWABLE VOLTAGE DROP.
9. DO NOT SCALE THE DRAWINGS. BECAUSE OF THE SCALE OF THE DRAWINGS, IT IS NOT POSSIBLE TO INDICATE ALL OFFSETS, FITTINGS OR OTHER SIMILAR ITEMS WHICH MAY BE REQUIRED TO MAKE A COMPLETE OPERATING SYSTEM. CAREFULLY INVESTIGATE CONDITIONS AFFECTING WORK AND INSTALL WORK IN SUCH MANNER THAT INTERFERENCES BETWEEN PIPES, CONDUITS, DUCTS, EQUIPMENT, ARCHITECTURAL AND STRUCTURAL FEATURES SHALL BE AVOIDED.

PROJECT DEMOLITION NOTES

1. ANY EXISTING WIRING SERVING DEVICES TO REMAIN IN SERVICE, AND WHICH IS INTERRUPTED BY WORK PERFORMED UNDER THIS CONTRACT, SHALL BE REROUTED TO MAINTAIN CIRCUIT CONTINUITY. ALL EXISTING SYSTEMS/DEVICES TO REMAIN. PRIOR TO COMMENCING WITH DEMOLITION, IDENTIFY ALL POWER, LIGHTING, COMMUNICATION, AND SIGNAL CIRCUITS PASSING THROUGH THE DEMOLITION AREA OR EXTENDING BEYOND THE DEMOLITION AREA. COORDINATE WITH DEMOLITION WORK OF OTHER TRADES.
2. THE EXISTING BUILDING MUST BE KEPT IN OPERATION AT ALL TIMES. MAINTAIN ELECTRICAL SERVICES AND SYSTEMS EXCEPT FOR EQUIPMENT BEING REPLACED BY THIS PROJECT. MAINTAIN CONTINUITY OF FIRE ALARM, LIFE SAFETY AND SECURITY SYSTEMS TO ALL OCCUPIED AREAS OF THE BUILDING THROUGHOUT THE CONSTRUCTION PERIOD. PROVIDE TEMPORARY WIRING AND BRANCH CIRCUITING AS NECESSARY TO MAINTAIN OPERATION OF EXISTING CIRCUITS AND SYSTEMS EXTENDING BEYOND REMODEL AREA. ASSUME FULL RESPONSIBILITY FOR ANY DISRUPTION TO EXISTING SERVICES. RECONNECT ANY SERVICES WHICH ARE TO REMAIN, AND WHICH HAVE BEEN DISCONNECTED DURING DEMOLITION OR CONSTRUCTION. ARRANGE WORK IN SUCH A MANNER THAT INTERRUPTIONS IN SERVICES OCCUR ONLY AT PRE-SCHEDULED TIMES. CARRY OUT THE WORK WITH A MINIMUM OF NOISE, DUST AND DISTURBANCE.
3. PERMANENTLY REMOVE ABANDONED ELECTRICAL EQUIPMENT, LIGHTING FIXTURES, ELECTRICAL DEVICES, POWER AND SIGNALLING WIRING DEVICES AND ASSOCIATED WIRE, RACEWAYS, AND/OR JUNCTION BOXES. THE REMOVAL OR RELOCATION OF EXISTING ELECTRICAL EQUIPMENT PRESENTLY CONCEALED IN EXISTING CONSTRUCTION SHALL BE COORDINATED WITH THE OWNER PRIOR TO REMOVAL OR RELOCATION. RACEWAYS AND CONDUCTORS SHALL BE REMOVED BACK TO THE SOURCE OR NEAREST REMAINING JUNCTION BOX OR DEVICE AS FAR AS PRACTICAL, OR WHERE COMPLETE REMOVAL NOT PRACTICAL, RENDERED PERMANENTLY SAFE.
4. ANY EXISTING SYSTEM OUTAGES SHALL BE OF MINIMUM DURATION AND AT A TIME ACCEPTABLE TO THE OWNER, ARRANGED A MINIMUM OF 10 WORKING DAYS IN ADVANCE. LONGER NOTICES AND/OR ADDITIONAL RESTRICTIONS PERTAINING TO OUTAGES MAY BE REQUIRED IN SOME INSTANCES, AS PER SPECIFICATIONS. VERIFY PROTOCOL WITH ALL PROJECT STAKEHOLDERS INCLUDING OWNER, TENANT, CONSTRUCTION MANAGER AND/OR USER GROUP(S) AS APPLICABLE.
5. ELECTRICAL EQUIPMENT, FIXTURES, AND/OR DEVICES SCHEDULED TO REMAIN OR TO BE RELOCATED THAT ARE DAMAGED DURING DEMOLITION SHALL BE REPLACED WITH SIMILAR TYPE AS APPROVED BY THE OWNER, AT NO ADDITIONAL CHARGE TO THE OWNER.
6. IN THE EVENT THAT DEMOLITION WORK AFFECTS THE STRUCTURAL SUPPORT OF EXISTING ELECTRICAL EQUIPMENT THAT IS TO REMAIN IN SERVICE, IT SHALL BE RE-SUPPORTED IN ACCORDANCE WITH ALL APPLICABLE CODES. PROVIDE TEMPORARY SUPPORTS WHERE REQUIRED.
7. UNUSED FLUSH MOUNTED DEVICES, OUTLET AND OTHER BOXES IN FINISHED AREAS SHALL BE REMOVED FROM WALL AND THE REMAINING HOLE PATCHED TO MATCH ADJACENT WALL SURFACES. UNUSED RACEWAYS AND SLEEVES SHALL BE CUT FLUSH AT CEILING, FLOOR OR WALL AND FILLED WITH GROUT OR REQUIRED FIRE SEALANT. UNUSED RACEWAYS ABOVE ACCESSIBLE CEILINGS SHALL BE REMOVED.
8. ELECTRICAL MATERIAL SCHEDULED FOR REMOVAL IS TO BE REMOVED FROM THE SITE AND PROPERLY DISPOSED OF AS PART OF THIS CONTRACT. ANY ELECTRICAL MATERIAL THE OWNER WISHES TO RETAIN TO BECOME THE PROPERTY OF THE OWNER AND TO BE REMOVED AND PLACED AT A LOCATION ON THE SITE AS DIRECTED BY THE OWNER.
9. THE DEMOLITION DRAWINGS SHOW THE GENERAL SCOPE OF THE DEMOLITION AND NOT EXACT DETAILS OR TOTAL EXTENT. FOR EXACT DETAILS AND TOTAL EXTENT, EACH SERVICE MUST BE CAREFULLY CHECKED ON SITE. BEFORE REMOVING SERVICES FOLLOW THE SERVICE THROUGH TO ENSURE OTHER AREAS OF THE BUILDING ARE NOT AFFECTED.

NEW THERMOSTATS FOR ALL NEW MECHANICAL UNITS ARE GOING TO BE PROVIDED BY MECHANICAL.
REFER TO GENERAL NOTES ON MECHANICAL SET OF DRAWINGS.

REGISTERED PROFESSIONAL ENGINEER
PAUL K. ERICSON
No. 11219
exp.06/30/2025
ELECTRICAL
STATE OF CALIFORNIA

05-13-2024

IFB 4-2550 EXHIBIT B

Stantec
801 S. Figueroa Street, Suite 300
Los Angeles, CA 90017

Copyright Reserved
The contractor shall verify and be responsible for all dimensions. DO NOT scale the drawing - any errors or omissions shall be reported to Stantec without delay.
The copyrights to all designs and drawings are the property of Stantec. Reproduction or use for any purpose other than that authorized by Stantec is prohibited.

REVISION	DESCRIPTION	DATE
4	100% RESUBMITTAL	05/13/2024
3	100% CONSTRUCTION DRAWING SUBMITTAL	03/27/2024
2	90% UPDATED CONSTRUCTION SUBMITTAL	02/13/2024
1	90% CONSTRUCTION DRAWING SUBMITTAL	12/07/2023

REPLACEMENT OF MECHANICAL UNITS AT SANTA ANA BUS BASE
4301 W. MAC ARTHUR BLVD., SANTA ANA, CA

SYMBOLS, NOTES AND ANNOTATIONS

JOB #:	
DESIGN BY:	IZ
DRAWN BY:	ERL
CHECKED BY:	PKE
DATE:	02/13/2024
SCALE:	12" = 1'-0"
SHEET:	E-001D

OCTA
ORANGE COUNTY TRANSPORTATION AUTHORITY
550 SOUTH MAIN STREET, ORANGE, CA

Autodesk Docs://2014233703_Santa_Ana_Bus/elec_SantaAnaBus_2014233703.rvt
5/8/2024 9:59:41 AM

SCHEMATICS

CABLE IDENTIFICATION, TABLE

C01 / 3 | 1 | 1

- CIRCUIT IDENTIFICATION, SEE FEEDER TABLE
  - A = ALUMINUM
  - C = COPPER
  - M = METAL CLAD
- QUANTITY OF GROUND CONDUCTORS, SIZE PER FEEDER TABLE
  - 0 = NOT REQUIRED
  - 1 = 1 GROUND CONDUCTOR
  - 2 = 1 GROUND CONDUCTOR AND 1 ISOLATED GROUND CONDUCTOR
- QUANTITY OF NEUTRAL CONDUCTORS, SIZE PER FEEDER TABLE
  - 0 = NOT REQUIRED
  - 1 = 1 NEUTRAL CONDUCTOR
  - 2 = 2 NEUTRAL CONDUCTORS
- QUANTITY OF PHASE CONDUCTORS, SIZE PER FEEDER TABLE

CABLE IDENTIFICATION, TEXT

4 #12+ 1 #12G, [SIZE]C

- CONDUIT SIZE
- QUANTITY AND SIZE OF GROUNDS
- QUANTITY AND SIZE OF CONDUCTORS

CABLE IDENTIFICATION, TEXT — CONDUIT SIZE

4 SETS (3×1/C 600 kcmil +1 #3/0G, Cu, 15kV, 133%, TR-XLPE, [SIZE]C)

- CABLE TYPE
- INSULATION LEVEL
- INSULATION VOLTS
- MATERIAL
- QUANTITY AND SIZE OF GROUNDS
- QUANTITY AND SIZE OF CONDUCTORS
- QUANTITY OF SETS

#×1/C — SINGLE CONDUCTOR CABLE, # INDICATES QUANTITY OF CABLES

#/C — MULTI-CONDUCTOR CABLE, # INDICATES QUANTITY OF CONDUCTORS

— SHORT CIRCUIT CURRENT RATING, # INDICATES RATING

BUS DUCT

BUS

FEEDER

PANEL, SINGLE TUB	PANEL, DOUBLE TUB, MAIN LUGS		PANEL, DOUBLE TUB, FEED THRU LUGS	
NAME LOCATION 225 A MCB 480 V 3 Ø, 4 W 42 CCT	NAME LOCATION 225 A MCB 480 V 3 Ø, 4 W 42 CCT	NAME	NAME LOCATION 225 A MCB 480 V 3 Ø, 4 W 42 CCT	NAME LOCATION 225 A MCB 480 V 3 Ø, 4 W 42 CCT

SCHEMATICS

- AC/DC INVERTER
- AUTOTRANSFORMER
- AUTOMATIC TRANSFER SWITCH, DUAL BYPASS
- AUTOMATIC TRANSFER SWITCH, SINGLE BYPASS
- BATTERY
- BIMETALLIC THERMAL OVERLOAD
- CAPACITOR
- CIRCUIT BREAKER, LOW VOLTAGE, DRAW OUT
- CIRCUIT BREAKER, LOW VOLTAGE, FIXED
- CIRCUIT BREAKER, LOW VOLTAGE, WITH LIMITER
- CIRCUIT BREAKER, MEDIUM VOLTAGE, DRAW OUT
- CIRCUIT BREAKER, MEDIUM VOLTAGE, FIXED
- CIRCUIT BREAKER, MEDIUM VOLTAGE, VACUUM INTERRUPTER
- CONNECTION, CONNECTED
- CONNECTION, DRAW OUT, DISCONNECTED
- CONNECTION, FEED FROM/TO
- CONNECTION, SPLICE
- CONTACT
- CURRENT TRANSFORMER
- DEAD BREAK ELBOW
- DRAW OUT FUSE AND POTENTIAL TRANSFORMER
- FUSE
- FUSED CUTOUT
- GROUND
- GROUND STUD
- INDUCTOR
- LIGHTNING ARRESTOR, GAP TYPE
- LIGHTNING ARRESTOR, MOV TYPE
- LOAD BREAK ELBOW
- NOT CONNECTED
- POTENTIAL TRANSFORMER
- POTHEAD
- STRESS CONE
- SWITCH, FUSED LOAD BREAK
- SWITCH, NON-FUSED LOAD BREAK
- SWITCH, NON-FUSED DOUBLE LOAD BREAK
- SWITCH, NON-FUSED LOAD BREAK WITH GROUNDING POSITION
- RESISTOR
- ? — TERMINAL BLOCK

SCHEMATICS

- TRANSFER SWITCH
- TRANSFORMER
- TRANSFORMER CONFIGURATION, DELTA
- TRANSFORMER CONFIGURATION, DELTA, CORNER GROUND
- TRANSFORMER CONFIGURATION, DELTA, OPEN
- TRANSFORMER CONFIGURATION, WYE
- TRANSFORMER CONFIGURATION, WYE, INDUCTOR, CURRENT TRANSFORMER, GROUND
- TRANSFORMER CONFIGURATION, WYE, RESISTOR, CURRENT TRANSFORMER, GROUND
- TRANSFORMER CONFIGURATION, WYE, RESISTOR, GROUND
- TRANSFORMER CONFIGURATION, WYE, SOLID GROUND
- TRANSFORMER CONFIGURATION, ZIGZAG
- ZERO SEQUENCE CURRENT TRANSFORMER
- 50 — RELAY, SINGLE FUNCTION
- 50/51 — RELAY, DUAL FUNCTION
- 50 50 50 / 50 50 50 — RELAY, MULTIFUNCTION
- A — AMMETER
- AS — AMPERAGE METER SWITCH
- DMS — DIGITAL METERING SYSTEM
- G — GENERATOR
- K — KEY OPERATED SWITCH
- LSIG — RELAY, TRIP UNIT
- LSIG — DRAW OUT BREAKER C/W INTEGRAL SOLID STATE TRIP UNIT
- LSIG — DRAW OUT BREAKER C/W SERIES ELECTROMECHANICAL TRIP UNIT
- M — INLINE SOCKET METER
- METER — METER
- O/L — ELECTRONIC THERMAL OVERLOAD
- SB — SHORTING BLOCK
- SPACE — SPACE, DRAW OUT BREAKER
- SPACE — SPACE, FIXED BREAKER
- SPD — SURGE PROTECTION DEVICE
- TS — TEST SWITCH
- V — VOLTMETER
- VS — VOLTAGE METER SWITCH
- X — INDICATOR, VOLTAGE PRESENT

STANDARD MOUNTING HEIGHTS

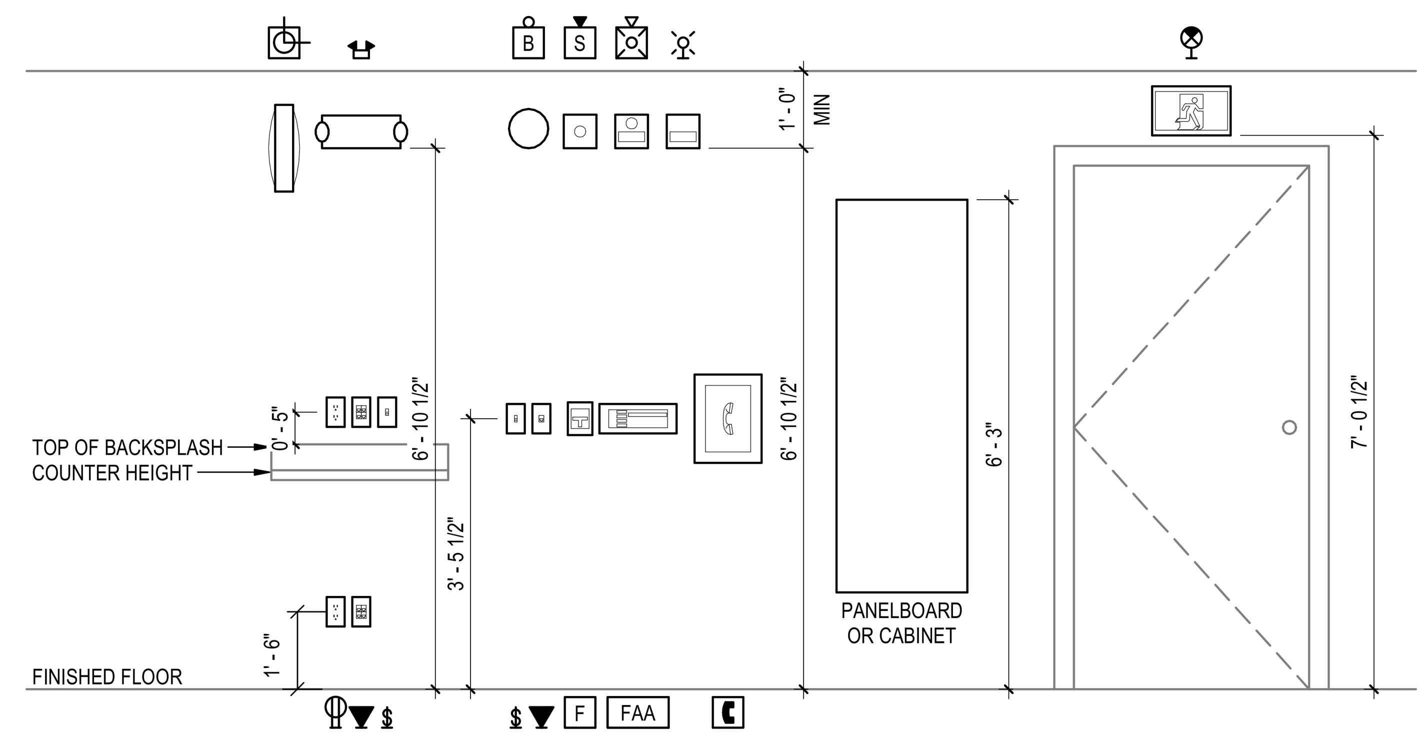

DRAWING INDEX

NO.	DRAWING NAME
E-001	SYMBOLS, NOTES AND ANNOTATIONS
E-002	SCHEMATIC SYMBOLS AND ELECTRICAL DRAWING INDEX
E-210	OPERATIONS BUILDING ELECTRICAL ROOF PLAN
E-220	MAINTENANCE BUILDING OVERALL ELECTRICAL ROOF PLAN
E-221	MAINTENANCE BUILDING SECTION ONE ELECTRICAL ROOF PLAN
E-222	MAINTENANCE BUILDING SECTION TWO ELECTRICAL ROOF PLAN
E-223	MAINTENANCE BUILDING SECTION THREE ELECTRICAL ROOF PLAN
E-230	FUEL/BRAKE/TIRE REPAIR BUILDING ELECTRICAL ROOF PLAN
E-240	BUS WASH/BRAKE DYNO BUILDING ELECTRICAL ROOF PLAN
E-250	DETAIL/CLEANING BUILDING ELECTRICAL ROOF PLAN
E-600	ELECTRICAL SINGLE LINE DIAGRAM
E-601	ELECTRICAL SINGLE LINE DIAGRAM
E-700	PANEL SCHEDULES
E-701	PANEL SCHEDULES
E-702	PANEL SCHEDULES
E-703	PANEL SCHEDULES
E-704	PANEL SCHEDULES
E-800	CONDUIT SCHEDULES
E-801	CONDUIT SCHEDULES
E-802	CONDUIT SCHEDULES

ALUMINUM FEEDERS

ID	NOMINAL CIRCUIT RATING	SETS	CONDUCTORS	GROUND	CONDUIT W/ N (4W)	CONDUIT W/O N (3W)
A01	100	1	#1/0	#6	2"	2"
A02	125	1	#2/0	#4	2"	2"
A03	150	1	#3/0	#4	2"	2"
A04	175	1	#4/0	#4	2 1/2"	2"
A05	200	1	250 kcmil	#4	2 1/2"	2 1/2"
A06	225	1	350 kcmil	#2	3"	2 1/2"
A07	250	1	350 kcmil	#2	3"	2 1/2"
A08	300	1	500 kcmil	#2	3 1/2"	3"
A09	350	1	750 kcmil	#1	4"	3 1/2"
A10	400	2	250 kcmil	#1	2 1/2"	2 1/2"
A11	450	2	350 kcmil	#1/0	3"	2 1/2"
A12	500	2	350 kcmil	#1/0	3"	2 1/2"
A13	600	2	500 kcmil	#2/0	3 1/2"	3"
A14	800	3	350 kcmil	#3/0	3"	3"
A15	900	3	500 kcmil	#4/0	3 1/2"	3"
A16	1000	3	600 kcmil	#4/0	4"	4"
A17	1200	4	500 kcmil	250 kcmil	3 1/2"	3"
A18	1600	6	400 kcmil	350 kcmil	3"	2 1/2"
A19	2000	6	750 kcmil	500 kcmil	4"	4"
A20	2500	7	750 kcmil	750 kcmil	5"	4"
A21	3000	8	750 kcmil	750 kcmil	5"	4"
A22	4000	11	750 kcmil	750 kcmil	5"	4"

FEEDER GENERAL NOTES:

1. COPPER CONDUCTORS ARE BASED ON TYPE THHN/THWN COPPER CONDUCTORS ONLY. CONDUITS BASED ON THHN/THWN CONDUCTORS ONLY. OTHER CONDUCTORS MAY REQUIRE LARGER CONDUITS.
2. ALUMINUM CONDUCTORS ARE BASED ON TYPE XHHN COMPACT STRANDED ALUMINUM CONDUCTORS ONLY. CONDUITS BASED ON XHHN CONDUCTORS ONLY. OTHER CONDUCTORS MAY REQUIRE LARGER CONDUITS.

COPPER FEEDERS

ID	NOMINAL CIRCUIT RATING	SETS	CONDUCTORS	BOND	CONDUIT W/ NEUTRAL (4W)	CONDUIT W/O NEUTRAL (3W)	MAXIMUM LENGTH*
C01	20	1	#12	#12	3/4"	3/4"	
C02	30	1	#10	#12	3/4"	3/4"	
C03	40	1	#8	#10	3/4"	3/4"	
C04	50	1	#6	#10	1"	3/4"	
C05A	60	1	#4	#10	1"	1"	*BASED ON 75 DEGREE
C05B	60	1	#4	#10	1 1/4"	1 1/4"	*BASED ON 60 DEGREE
C06	70	1	#4	#8	1 1/4"	1 1/4"	
C07A	80	1	#4	#8	1 1/4"	1 1/4"	*BASED ON 75 DEGREE
C07B	80	1	#3	#8	1 1/4"	1 1/4"	*BASED ON 60 DEGREE
C08	90	1	#3	#8	1 1/4"	1 1/4"	
C09A	100	1	#3	#8	1 1/4"	1 1/4"	*BASED ON 75 DEGREE
C09B	100	1	#1	#6	1 1/2"	1 1/2"	*BASED ON 60 DEGREE
C10	125	1	#1	#6	1 1/2"	1 1/2"	
C11	150	1	#1/0	#6	2"	1 1/2"	
C12	175	1	#2/0	#6	2"	2"	
C13	200	1	#3/0	#6	2"	2"	
C14	225	1	#4/0	#4	2 1/2"	2"	
C15	250	1	250 kcmil	#4	2 1/2"	2 1/2"	
C16	300	1	350 kcmil	#3	3"	2 1/2"	
C17	350	1	500 kcmil	#3	3 1/2"	3"	
C18	400	2	#3/0	#6	2"	2"	
C19	450	2	#4/0	#4	2 1/2"	2"	
C20	500	2	250 kcmil	#4	2 1/2"	2 1/2"	
C21	600	2	350 kcmil	#3	3"	2 1/2"	
C22A	800	3	350 kcmil	#3	3"	2 1/2"	
C22B	800	4	#3/0	#6	2"	2"	
C23	900	3	350 kcmil	#3	3"	2 1/2"	
C24	1000	3	500 kcmil	#3	3 1/2"	3"	
C25	1200	4	350 kcmil	#3	3"	2 1/2"	
C26	1600	5	500 kcmil	#3	3 1/2"	3"	
C27	2000	6	500 kcmil	#3	3 1/2"	3"	
C28	2500	7	500 kcmil	#3	3 1/2"	3"	
C29	3000	8	500 kcmil	#3	3 1/2"	3"	
C30	4000	11	500 kcmil	#3	3 1/2"	3"	

Stantec
801 S. Figueroa Street, Suite 300
Los Angeles, CA 90017

Copyright Reserved
The Contractor shall verify and be responsible for all dimensions. DO NOT scale the drawing - any errors or omissions shall be reported to Stantec without delay.
The Copyrights to all designs and drawings are the property of Stantec. Reproduction or use for any purpose other than that authorized by Stantec is forbidden.

REVISION	DESCRIPTION	DATE
4	100% RESUBMITTAL	05/13/2024
3	100% CONSTRUCTION DRAWING SUBMITTAL	03/27/2024
2	90% UPDATED CONSTRUCTION SUBMITTAL	02/13/2024
1	90% CONSTRUCTION DRAWING SUBMITTAL	12/07/2023

REPLACEMENT OF MECHANICAL UNITS AT SANTA ANA BUS BASE

4301 W. MAC ARTHUR BLVD., SANTA ANA, CA

SCHEMATIC SYMBOLS AND ELECTRICAL DRAWING INDEX

JOB #:
DESIGN BY: IZ
DRAWN BY: ERL
CHECKED BY: PKE
DATE: 02/13/2024
SCALE: As indicated
SHEET: **E-002D**

REGISTERED PROFESSIONAL ENGINEER
PAUL K. ERICSON
No. 11219
exp.06/30/2025
ELECTRICAL
STATE OF CALIFORNIA

05-13-2024

OCTA
ORANGE COUNTY TRANSPORTATION AUTHORITY
550 SOUTH MAIN STREET, ORANGE, CA

Autodesk Docs://2014233703_Santa_Ana_Bus/elec_SantaAnaBus_2014233703.rvt
5/8/2024 9:59:42 AM

IFB 4-2550 EXHIBIT B

GENERAL NOTES

1. ALL THE SIZES OF ELECTRICAL DISCONNECT SWITCHES, MOTOR RATED SWITCHES, CONDUIT AND WIRE SIZES FOR THE MECHANICAL EQUIPMENT ARE BASED ON NEW MECHANICAL EQUIPMENT THAT IS GOING TO BE INSTALLED.
2. ALL ELECTRICAL EQUIPMENT INSTALLED OUTDOORS SHALL BE IN WEATHER PROOF ENCLOSURES PER CEC 406.
3. REFER TO SHEETS E-800, E-801 AND E-802 CONDUIT SCHEDULES FOR VOLTAGE, PHASE, CONDUIT AND WIRE SIZES FOR ALL MECHANICAL EQUIPMENT BEING REPLACED.
4. NEW DISCONNECT SWITCHES TO BE PROVIDED AND INSTALLED TO MATCH EXISTING CONDITIONS.
5. KEY NOTES ARE PER SHEET NOT PER PROJECT.

KEY NOTES:

1 PROVIDE NEW 120V, 1PH, MOTOR RATED MANUAL SWITCH. CONNECT TO EXISTING CIRCUIT AS INDICATED, RE-USE EXISTING CONDUIT AND PROVIDE NEW CONDUCTORS TO MATCH EXISTING.

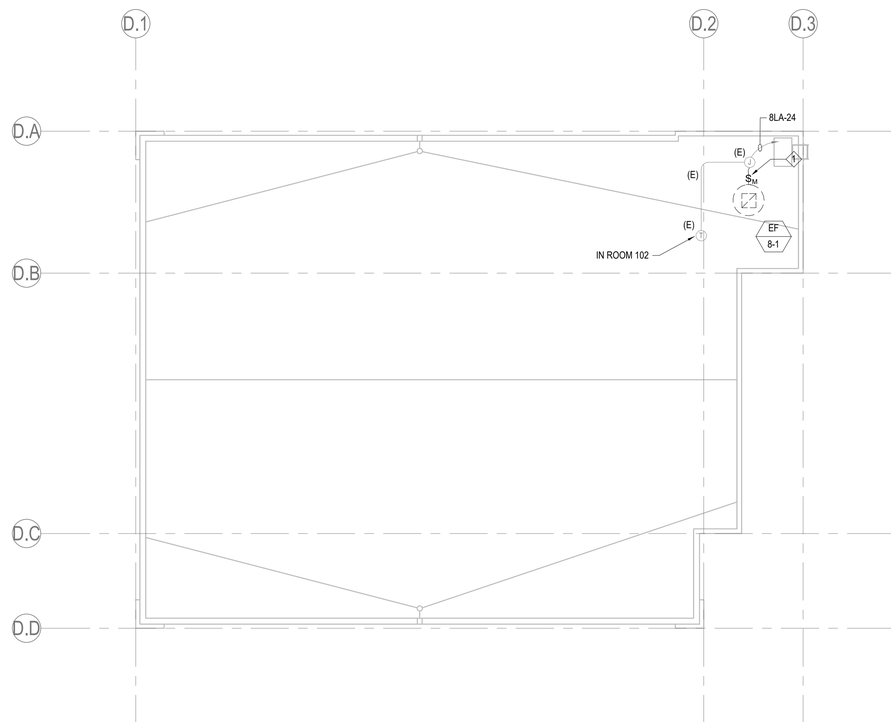

1 E-250 **DETAIL/CLEANING BUILDING ELECTRICAL ROOF PLAN**
3/32" = 1'-0"

N

Stantec
801 S. Figueroa Street, Suite 300
Los Angeles, CA 90017

Copyright Reserved
The Contractor shall verify and be responsible for all dimensions. DO NOT scale the drawing - any errors or omissions shall be reported to Stantec without delay.
The Copyright in the Work shall be the property of Stantec. Reproduction or use for any purpose other than that authorized by Stantec is forbidden.

REVISION	DESCRIPTION	DATE
4	100% RESUBMITTAL	05/13/2024
3	100% CONSTRUCTION DRAWING SUBMITTAL	03/27/2024
2	90% UPDATED CONSTRUCTION SUBMITTAL	02/13/2024
1	90% CONSTRUCTION DRAWING SUBMITTAL	12/07/2023

REPLACEMENT OF MECHANICAL UNITS AT SANTA ANA BUS BASE
4301 W. MAC ARTHUR BLVD., SANTA ANA, CA

DETAIL/CLEANING BUILDING ELECTRICAL ROOF PLAN

JOB #:	
DESIGN BY:	IZ
DRAWN BY:	ERL
CHECKED BY:	PKE
DATE:	02/13/2024
SCALE:	As indicated
SHEET:	E-250D

REGISTERED PROFESSIONAL ENGINEER
PAUL K. ERICSON
No. 11219
exp. 06/30/2025
ELECTRICAL
STATE OF CALIFORNIA

05-13-2024

OCTA
ORANGE COUNTY TRANSPORTATION AUTHORITY
550 SOUTH MAIN STREET, ORANGE, CA

Autodesk Docs://2014233703_Santa_Ana_Bus/elec_SantaAnaBus_2014233703.rvt

5/8/2024 9:59:45 AM

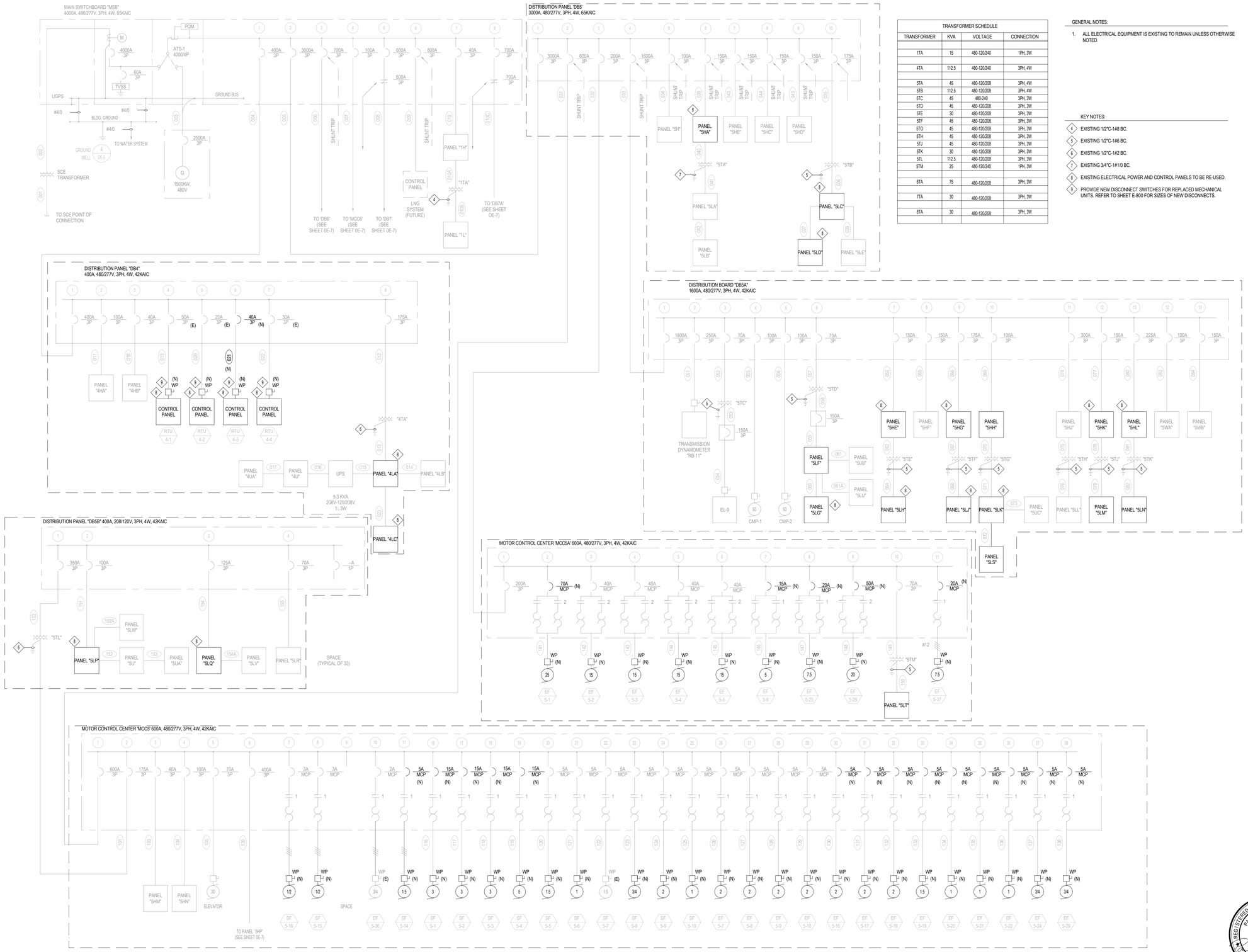

TRANSFORMER SCHEDULE			
TRANSFORMER	KVA	VOLTAGE	CONNECTION
1TA	15	480-120/240	1PH, 3W
4TA	112.5	480-120/240	3PH, 4W
5TA	45	480-120/208	3PH, 4W
5TB	112.5	480-120/208	3PH, 4W
5TC	45	480-240	3PH, 3W
5TD	45	480-120/208	3PH, 3W
5TE	30	480-120/208	3PH, 3W
5TF	45	480-120/208	3PH, 3W
5TG	45	480-120/208	3PH, 3W
5TH	45	480-120/208	3PH, 3W
5TJ	45	480-120/208	3PH, 4W
5TK	30	480-120/208	3PH, 3W
5TL	112.5	480-120/208	3PH, 3W
5TM	25	480-120/240	1PH, 3W
6TA	75	480-120/208	3PH, 3W
7TA	30	480-120/208	3PH, 3W
8TA	30	480-120/208	3PH, 3W

GENERAL NOTES:

1. ALL ELECTRICAL EQUIPMENT IS EXISTING TO REMAIN UNLESS OTHERWISE NOTED.

KEY NOTES:

4. EXISTING 1/2"C-1#8 BC.
5. EXISTING 1/2"C-1#6 BC.
6. EXISTING 1/2"C-1#2 BC.
7. EXISTING 3/4"C-1#1/0 BC.
8. EXISTING ELECTRICAL POWER AND CONTROL PANELS TO BE RE-USED.
9. PROVIDE NEW DISCONNECT SWITCHES FOR REPLACED MECHANICAL UNITS. REFER TO SHEET E-800 FOR SIZES OF NEW DISCONNECTS.

Stantec
801 S. Figueroa Street, Suite 300
Los Angeles, CA 90017

Copyright Reserved
The contractor shall verify and be responsible for all dimensions. DO NOT scale the drawing - any errors or omissions shall be reported to Stantec without delay.
This drawing is the property of Stantec and shall not be reproduced or used for other purposes. Reproduction or use for any purpose other than that authorized by Stantec is prohibited.

REVISION	DESCRIPTION	DATE
4	100% RESUBMITTAL	05/13/2024
3	100% CONSTRUCTION DRAWING SUBMITTAL	03/27/2024
2	90% UPDATED CONSTRUCTION SUBMITTAL	02/13/2024
1	90% CONSTRUCTION DRAWING SUBMITTAL	12/07/2023

REPLACEMENT OF MECHANICAL UNITS AT SANTA ANA BUS BASE

4301 W. MAC ARTHUR BLVD., SANTA ANA, CA

ELECTRICAL SINGLE LINE DIAGRAM

JOB #:	
DESIGN BY:	IZ
DRAWN BY:	ERL
CHECKED BY:	PKE
DATE:	02/13/2024
SCALE:	NTS
SHEET:	E-600D

REGISTERED PROFESSIONAL ENGINEER
PAUL K. ERICSSON
No. 11219
exp. 06/30/2025
ELECTRICAL
STATE OF CALIFORNIA

05-13-2024

OCTA

ORANGE COUNTY TRANSPORTATION AUTHORITY
550 SOUTH MAIN STREET, ORANGE, CA

Autodesk Docs://2014233703_Santa_Ana_Bus/elec_SantaAnaBus_2014233703.rvt

IFB 4-2550 EXHIBIT B

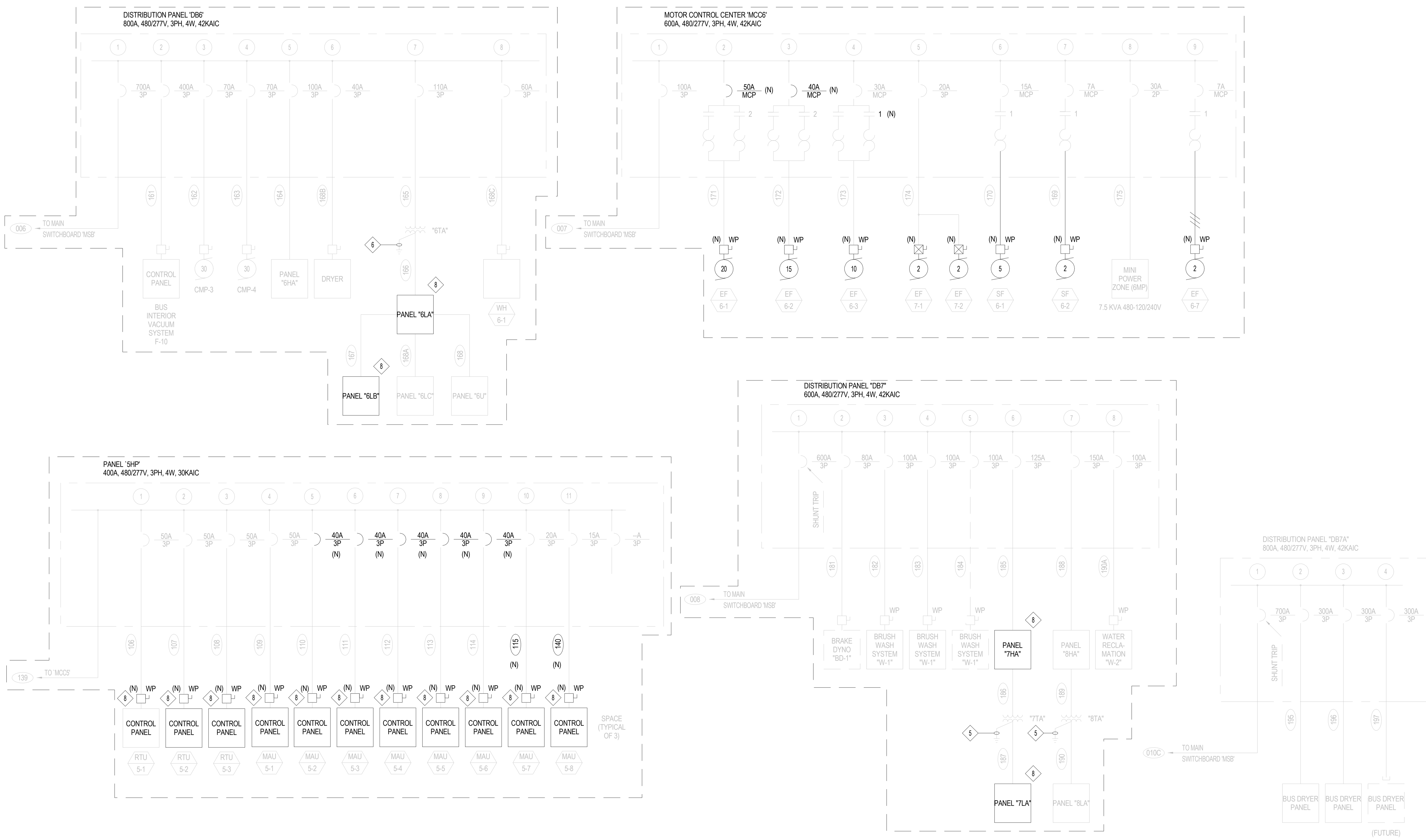

GENERAL NOTES:

1. ALL ELECTRICAL EQUIPMENT IS EXISTING TO REMAIN UNLESS OTHERWISE NOTED.

KEY NOTES:

4. EXISTING 1/2"C-1#8 BC.
5. EXISTING 1/2"C-1#6 BC.
6. EXISTING 1/2"C-1#2 BC.
7. EXISTING 3/4"C-1#1/0 BC.
8. EXISTING ELECTRICAL POWER AND CONTROL PANELS TO BE USED FOR REPLACED MECHANICAL UNITS.

DISTRIBUTION PANEL DB6

LOAD NAME	VOLTS	PH	CONNECTED HP	CONNECTED KVA	AMPS	REMARKS
F-10	480	3		253		
CMP-3	480	3	30	33		
CMP-4	480	3	30	33		
PANEL 6HA	480	3		53		
XFMR 6TA (PANEL 6LA)	480	3		68		
DRYER	480	3		21		
WH 6-1	480	3		36		
TOTAL	480	3		497	598	

MOTOR CONTROL CENTER MCC6

LOAD NAME	VOLTS	PH	CONNECTED HP	CONNECTED KVA	AMPS	REMARKS
EF 6-1	480	3	20	22.4		
EF 6-2	480	3	15	17.5		
EF 6-3	480	3	10	11.6		
EF 7-1, EF 7-2	480	3	2 x 2	5.6		
SF 6-1	480	3	5	6.3		
SF 6-2	480	3	2	2.8		
MINI POWER ZONE (6MP)	480	1		2.3		
EF 6-7	480	3	3	4.0		
TOTAL	480	3		72.5	87.2	

DISTRIBUTION PANEL DB7

LOAD NAME	VOLTS	PH	CONNECTED HP	CONNECTED KVA	AMPS	REMARKS
BD-1	480	3		45		
W-1	480	3		66		
W-1	480	3		66		
W-1	480	3		66		
PANEL 7HA	480	3		67		
PANEL 8HA	480	3		90		
W-2	480	3		36		
TOTAL	480	3		435	523	

DISTRIBUTION PANEL DB7A

LOAD NAME	VOLTS	PH	CONNECTED HP	CONNECTED KVA	AMPS	REMARKS
BUS DRYER PANEL	480	3	(9) 15	157		
BUS DRYER PANEL	480	3	(9) 15	157		
BUS DRYER PANEL	480	3	(9) 15	157		
TOTAL	480	3		471	567	

DISTRIBUTION PANEL DB5B

LOAD NAME	VOLTS	PH	CONNECTED HP	CONNECTED KVA	AMPS	REMARKS
PANEL 5LP	208	3		27		
PANEL 5LQ	208	3		36		
PANEL 5LR	208	3		19		
TOTAL	208	3		82	226	

MOTOR CONTROL CENTER MCC5A

LOAD NAME	VOLTS	PH	CONNECTED HP	CONNECTED KVA	AMPS	REMARKS
EF 5-1	480	3	25	28.3		
EF 5-2	480	3	15	17.5		
EF 5-3	480	3	15	17.5		
EF 5-4	480	3	15	17.5		
EF 5-5	480	3	15	17.5		
EF 5-6	480	3	5	6.3		
EF 5-25	480	3	7 1/2	9.1		
EF 5-28	480	3	20	22.4		
EF 5-37	480	3	7 1/2	9.1		
XFMR 5TM (PANEL 5LT)	480	1		18		
TOTAL	480	3		163.2	196.4	

DISTRIBUTION BOARD DB5A

LOAD NAME	VOLTS	PH	CONNECTED HP	CONNECTED KVA	AMPS	REMARKS
RB-11	480	3		150		
EL-9	480	3		43		
COMP. #1	480	3	50	54		
COMP. #2	480	3	50	54		
XFMR 5TD (PANEL 5LF)	480	3		45		
PANEL 5HE	480	3		73		
PANEL 5HF	480	3		79		
PANEL 5HG	480	3		115		
PANEL 5HH	480	3		45		
PANEL 5HJ	480	3		156		
PANEL 5HK	480	3		89		
PANEL 5HL	480	3		133		
PANEL 5WA	480	3		42		
PANEL 5WB	480	3		28		
TOTAL	480	3		1106	1330	

MOTOR CONTROL CENTER MCC5

LOAD NAME	VOLTS	PH	CONNECTED HP	CONNECTED KVA	AMPS	REMARKS
XFMR 5TL (DB5B)	480	3		82		
PANEL 5HM	480	3		8.4		
PANEL 5HN	480	3		48		
PANEL 5HP	480	3		187	238.9	287
ELEVATOR	480	3	30	33		
SF 5-1	480	3	3	4		
SF 5-2	480	3	3	4		
SF 5-3	480	3	3	4		
SF 5-4	480	3	5	6.3		
SF 5-5	480	3	1 1/2	2.5		
SF 5-6	480	3	1	1.7		
SF 5-7	480	3	1 1/2	2.5		
SF 5-8	480	3	3/4	1.3		
SF 5-9	480	3	2	2.8		
SF 5-10	480	3	1	1.7		
SF 5-14	480	3	1-1/2	2.5		
SF 5-15	480	3	1/2	0.9		
SF 5-16	480	3	1/2	0.9		
EF 5-7	480	3	2	2.8		
EF 5-8	480	3	2	2.8		
EF 5-9	480	3	2	2.8		
EF 5-10	480	3	2	2.8		
EF 5-16	480	3	2	2.8		
EF 5-17	480	3	2	2.8		
EF 5-18	480	3	2	2.8		
EF 5-19	480	3	1 1/2	2.5		
EF 5-20	480	3	1	1.7		
EF 5-21	480	3	1	1.7		
EF 5-22	480	3	1	1.7		
EF 5-24	480	3	3/4	1.3		
EF 5-29	480	3	1/2	0.9		
EF 5-36	480	3	3/4	1.3		
TOTAL	480	3		473.6	570	

PANEL 5HP

LOAD NAME	VOLTS	PH	CONNECTED HP	CONNECTED KVA	AMPS	REMARKS
RTU 5-1	480	3		40.7		
RTU 5-2	480	3		34		
RTU 5-3	480	3		34		
MAU 5-1	480	3	20	23.3		
MAU 5-2	480	3	15	18.4		
MAU 5-3	480	3	15	18.4		
MAU 5-4	480	3	15	18.4		
MAU 5-5	480	3	15	18.4		
MAU 5-6	480	3	15	18.4		
MAU 5-7	480	3	7 1/2	10		
MAU 5-8	480	3	3	4.9		
TOTAL	480	3		238.9	287	

MAIN SWITCHBOARD MSB LOAD SUMMARY / GENERATOR LOAD SUMMARY

LOAD NAME	VOLTS	PH	NORMAL CONNECTED HP	NORMAL CONNECTED KVA	NORMAL CONNECTED AMPS	NORMAL DEMAND	GENERATOR DEMAND
DB4	480	3		242			
DB5	480	3		2142			
DB6	480	3		497			
MCC6	480	3		72.5			
DB7	480	3		435			
LNG SYSTEM	480	3		582			
PANEL 1H	480	3		16			
DB7A	480	3		471			
TOTAL	480	3		4457	5364	(0.7) x 5364 = 3755 AMPS	2216KVA - 435KVA (DB7) - 471KVA (DB7A) = 1310KVA

NOTE:
1. 1500KW GENERATOR = 1666KVA
2. THE GENERATOR ESTIMATED DEMAND LOAD IS 50% OF THE NORMAL CONNECTED LOAD (4433KVA x 0.5 = 2216KVA).
3. BUS WASH/BRAKE DYNO BUILDING WILL DE-ENERGIZED WHEN THE GENERATOR STARTS.

DISTRIBUTION PANEL DB4

LOAD NAME	VOLTS	PH	CONNECTED HP	CONNECTED KVA	AMPS	REMARKS
PANEL 4HA	480	3		52		
PANEL 4HB	480	3		9.4		
RTU 4-1	480	3		34		
RTU 4-2	480	3		15		
RTU 4-3	480	3		24		
RTU 4-4	480	3		21		
XFMR 4TA (PANEL 4LA)	480	3		87		
TOTAL	480	3		242	291	

DISTRIBUTION PANEL DB5

LOAD NAME	VOLTS	PH	CONNECTED HP	CONNECTED KVA	AMPS	REMARKS
MCC5	480	3		421.7		
MCC5A	480	3		163.2		
DB5A	480	3		1106		
PANEL 5H	480	3		23		
PANEL 5HA	480	3		99.4		
PANEL 5HB	480	3		88		
PANEL 5HC	480	3		88		
PANEL 5HD	480	3		83		
XFMR 5TB (PANEL 5LC)	480	3		70		
TOTAL	480	3		2142	2576	

REGISTERED PROFESSIONAL ENGINEER PAUL K. ERICSON No. 11219 exp.06/30/2025 ELECTRICAL STATE OF CALIFORNIA

05-13-2024

Stantec
801 S. Figueroa Street, Suite 300
Los Angeles, CA 90017

Copyright Reserved
The Contractor shall verify and be responsible for all dimensions. DO NOT scale the drawing - any errors or omissions shall be reported to Stantec without delay.
The Copyrights to all designs and drawings are the property of Stantec. Reproduction or use for any purpose other than that authorized by Stantec is forbidden.

REVISION	DESCRIPTION	DATE
4	100% RESUBMITTAL	05/13/2024
3	100% CONSTRUCTION DRAWING SUBMITTAL	03/27/2024
2	90% UPDATED CONSTRUCTION SUBMITTAL	02/13/2024
1	90% CONSTRUCTION DRAWING SUBMITTAL	12/07/2023

REPLACEMENT OF MECHANICAL UNITS AT SANTA ANA BUS BASE

4301 W. MAC ARTHUR BLVD., SANTA ANA, CA

ELECTRICAL SINGLE LINE DIAGRAM

JOB #:	
DESIGN BY:	IZ
DRAWN BY:	AD
CHECKED BY:	PKE
DATE:	02/13/2024
SCALE:	NTS
SHEET:	E-601D

OCTA

ORANGE COUNTY
TRANSPORTATION AUTHORITY
550 SOUTH MAIN STREET, ORANGE, CA

Stantec Panel

Name: **4LC** Volts: 208Y/120V Mains Type: MLO Type:
Location: Phases: 3 Mains Rating: 225 A AIC Rating: 10K
Supply From: 4LA Wires: 4 Max Rating: 225 A Mounting: Surface
Serves: Lugs: Single Lugs Enclosure: Type 1
Notes:

CKT	Circuit Description	Trip	Poles	CB	A		B		C		CB	Poles	Trip	Circuit Description	CKT	Key Note
1	Spare	20 A	1	--	180	**348**					--	**1**	20 A	**EF 4-1**	2	1
3	MTCC-4	20 A	1	--			100	**420**			--	**1**	20 A	**EF 4-2**	4	1
5	PAC-1	20 A	1	--					180	**420**	--	**1**	20 A	**EF 4-3**	6	1
7	LAV/UR CONTROLS	20 A	1	--	1200	**180**					--	**1**	20 A	**EF 4-4**	8	1
9	ANNUNCIATOR-4	20 A	1	--			180	50			--	1	20 A	EF TIME CLOCK	10	
11	MASTER DOOR CTRL PNL	20 A	1	--					500	360	--	1	20 A	ROOF RECEPTACLES	12	
13	MASTER INTERCOM CTRL PNL	20 A	1	--	500	100					--	1	20 A	IRRIGATION CONTROLLER - A	14	
15	SPACE	20 A	1	--			450	100			--	1	20 A	IRRIGATION CONTROLLER - B	16	
17	RECEPTACLES PBX	20 A	1	--					360	1840	--	1	40 A	BUS ENTRANCE GATE	18	
19	RECEPTACLES PBX	20 A	1	--	360	1840					--	1	40 A	BUS ENTRANCE GATE	20	
21	RECEPTACLES OC-12	20 A	1	--			360	1840			--	1	40 A	EMPLOYEE ENTRANCE GATE	22	
23	RECEPTACLES OC-12	20 A	1	--					360	600	--	1	20 A	BUS STOP SHELTER	24	
25	RECEPTACLES OC-12	30 A	1	--	500	3120					--	2	40 A	LOT MONITORING SHACK	26	
27	RECEPTACLE	20 A	1	--			180	3120			--	--	--	--	28	
29	HOOD	20 A	1	--					600	**1737**	--	2	**25 A**	**AC 4-1**	30	1
31	Spare	20 A	1	--	0	**1737**					--	**--**	--	**--**	32	
33	ELECTRIC RANGE	60 A	2	--			4350	**1737**			--	2	**25 A**	**AC 4-2**	34	1
35	--	--	--	--					4350	**1737**	--	**--**	--	**--**	36	
37	IRRIGATION CONTROLLER - C	20 A	1	--	0	**696**					--	1	20 A	**SF 4-1**	38	1
39	Space	--	1	--			--	100			--	1	20 A	DAMPERS	40	
41	Space	--	1	--					--	--	--	1	--	Space	42	
				Total Load:	10.76 kVA		12.99 kVA		13.04 kVA							
				Total Amps:	90 A		111 A		112 A							

Load Classification	Connected Load	Demand Factor	Estimated Demand	Panel Totals	
Spare	36792 VA	100.00%	36792 VA		
				Total Conn. Load:	36792 VA
				Total Est. Demand:	36792 VA
				Total Conn.:	102 A
				Total Est. Demand:	102 A
				Existing Total Conn. Load:	34710 VA
				Existing Total Conn:	96 A

CB Legend (blank = circuit breaker):
G = GFCI S = Shunt Trip D = Switching Duty A = AFCI H = HID Rated C = HACR Rated † = Existing Circuit ‡ = Revised Circuit
Notes:

Stantec Panel

Name: **5HA** Volts: 480Y/277V Mains Type: MLO Type:
Location: ELECTRICAL RM 184 Phases: 3 Mains Rating: 225 A AIC Rating: 22K
Supply From: DB5 Wires: 4 Max Rating: 225 A Mounting: Surface
Serves: Lugs: Single Lugs Enclosure: Type 1
Notes:

CKT	Circuit Description	Trip	Poles	CB	A		B		C		CB	Poles	Trip	Circuit Description	CKT	Key Note
1	SITE LIGHTING	20 A	1	--	2880	1600					--	1	20 A	WALL LIGHTING	2	
3	SITE LIGHTING	20 A	1	--			2880	1200			--	1	20 A	WALL LIGHTING	4	
5	SITE LIGHTING	20 A	1	--					2880	1200	--	1	20 A	WALL LIGHTING	6	
7	STEAM CLEAN LTG	20 A	1	--	2228	7167					--	3	60 A	SC-1 PARALLELOGRAM LIFT	8	
9	STEAM CLEAN LTG	20 A	1	--			2228	7167			--	--	--	--	10	
11	BAY LTG	20 A	1	--					1988	7167	--	--	--	--	12	
13	BAY LTG	20 A	1	--	1966	336					--	1	20 A	CANOPY LTG	14	
15	BAY LTG	20 A	1	--			2156	420			--	1	20 A	CANOPY LTG	16	
17	BAY LTG	20 A	1	--					2156	588	--	1	20 A	CANOPY LTG	18	
19	BAY LTG	20 A	1	--	1398	504					--	1	20 A	CANOPY LTG	20	
21	BAY LTG	20 A	1	--			1398	5600			--	3	30 A	SC-3 HOT PRESS. WASHER	22	
23	STEAM CLEAN LTG	20 A	1	--					1632	5600	--	--	--	--	24	
25	STEAM CLEAN LTG	20 A	1	--	1632	5600					--	--	--	--	26	
27	Space	--	1	--			--	**1496**			--	**3**	20 A	**SF 5-12, 5-13 & EF 5-34**	28	1
29	Space	--	1	--					--	**1496**	--	**--**	**--**	**--**	30	
31	Space	--	1	--	--	**1496**					--	**--**	**--**	**--**	32	
33	Space	--	1	--			--	--			--	1	--	Space	34	
35	Space	--	1	--					--	--	--	1	--	Space	36	
37	Space	--	1	--	--	8335					--	3	70 A	PANEL 5LA (VIA XFMR 5TA)	38	
39	Space	--	1	--			--	8530			--	--	--	--	40	
41	Space	--	1	--					--	6485	--	--	--	--	42	
				Total Load:	35.14 kVA		33.08 kVA		31.19 kVA							
				Total Amps:	128 A		120 A		113 A							

Load Classification	Connected Load	Demand Factor	Estimated Demand	Panel Totals	
Spare	99409 VA	100.00%	99409 VA		
				Total Conn. Load:	99409 VA
				Total Est. Demand:	99409 VA
				Total Conn.:	120 A
				Total Est. Demand:	120 A
				Existing Total Conn. Load:	98911 VA
				Existing Total Conn:	119 A

CB Legend (blank = circuit breaker):
G = GFCI S = Shunt Trip D = Switching Duty A = AFCI H = HID Rated C = HACR Rated † = Existing Circuit ‡ = Revised Circuit
Notes:

Stantec Panel

Name: **5HE** Volts: 480Y/277V Mains Type: MLO Type:
Location: ELECTRICAL RM 137 Phases: 3 Mains Rating: 225 A AIC Rating: 30K
Supply From: DB5A Wires: 4 Max Rating: 225 A Mounting: Surface
Serves: Lugs: Single Lugs Enclosure: Type 1
Notes:

CKT	Circuit Description	Trip	Poles	CB	A		B		C		CB	Poles	Trip	Circuit Description	CKT	Key Note
1	SITE LTG	20 A	1	--	960	1200					--	1	20 A	WALL LTG	2	
3	SITE LTG	20 A	1	--			960	1600			--	1	20 A	WALL LTG	4	
5	SITE LTG	20 A	1	--					960	1284	--	1	20 A	WALL LTG	6	
7	PARTS ROOM LTG	20 A	1	--	2062	480					--	3	20 A	PS-1 STAK SYSTEM	8	
9	PARTS ROOM LTG	20 A	1	--			2002	480			--	--	--	--	10	
11	PARTS ROOM LTG	20 A	1	--					2760	480	--	--	--	--	12	
13	PARTS ROOM LTG	20 A	1	--	2760	4633					--	3	30 A	PS-10 FORKLIFT	14	
15	PARTS ROOM LTG	20 A	1	--			2645	4633			--	--	--	--	16	
17	PARTS ROOM LTG	20 A	1	--					2760	4633	--	--	--	--	18	
19	PARTS ROOM LTG	20 A	1	--	2243	**1884**					--	3	20 A	**EF 5-31, 5-33, & SF 5-11**	20	1
21	PARTS ROOM LTG	20 A	1	--			2090	**1884**			--	--	--	--	22	
23	PARTS ROOM LTG	20 A	1	--					2645	**1884**	--	--	--	--	24	
25	PARTS ROOM LTG	20 A	1	--	2530	0					--	1	20 A	Spare	26	
27	PARTS ROOM LTG	20 A	1	--			2415	0			--	1	20 A	Spare	28	
29	PARTS ROOM LTG	20 A	1	--					2530	0	--	1	20 A	Spare	30	
31	TEL, ELECT, LUBE, C.A. LTG	20 A	1	--	539	0					--	1	20 A	Spare	32	
33	TEL, ELECT, LUBE, C.A. LTG	20 A	1	--			385	0			--	1	20 A	Spare	34	
35	Spare	20 A	1	--					0	0	--	1	20 A	Spare	36	
37	Spare	20 A	1	--	0	6330					--	3	50 A	PANEL 5LH (VIA XFMR 5TE)	38	
39	Spare	20 A	1	--			0	3680			--	--	--	--	40	
41	Spare	20 A	1	--					0	4155	--	--	--	--	42	
				Total Load:	25.62 kVA		22.77 kVA		24.09 kVA							
				Total Amps:	93 A		82 A		88 A							

Load Classification	Connected Load	Demand Factor	Estimated Demand	Panel Totals	
Spare	72486 VA	100.00%	72486 VA		
				Total Conn. Load:	72486 VA
				Total Est. Demand:	72486 VA
				Total Conn.:	87 A
				Total Est. Demand:	87 A
				Existing Total Conn. Load:	73134 VA
				Existing Total Conn:	88 A

CB Legend (blank = circuit breaker):
G = GFCI S = Shunt Trip D = Switching Duty A = AFCI H = HID Rated C = HACR Rated † = Existing Circuit ‡ = Revised Circuit
Notes:

Stantec Panel

Name: **5HJ** Volts: 480Y/277V Mains Type: MLO Type:
Location: BODY 174 Phases: 3 Mains Rating: 400 A AIC Rating: 22K
Supply From: DB5A Wires: 4 Max Rating: 400 A Mounting: Surface
Serves: Lugs: Single Lugs Enclosure: Type 1
Notes:

CKT	Circuit Description	Trip	Poles	CB	A		B		C		CB	Poles	Trip	Circuit Description	CKT
1	BP-1 IN-GROUND LIFT	30 A	3	--	3733	5600					--	3	50 A	V-1 COLLECTION VACUUM	2
3	--	--	--	--			3733	5600			--	--	--	--	4
5	--	--	--	--					3733	5600	--	--	--	--	6
7	BP-2 IN-GROUND LIFT	30 A	3	--	3733	504					--	1	20 A	CANOPY LTG	8
9	--	--	--	--			3733	420			--	1	20 A	CANOPY LTG	10
11	--	--	--	--					3733	0	--	1	20 A	SMOKER CANOPY LTG	12
13	BP-1 IN-GROUND LIFT	30 A	3	--	3733	0					--	1	20 A	Spare	14
15	--	--	--	--			3733	2134			--	1	20 A	BODY LTG	16
17	--	--	--	--					3733	2146	--	1	20 A	BODY LTG	18
19	BP-7 PAINT BOOTH	100 A	3	--	17800	0					--	1	20 A	LCP5D CONTROL	20
21	--	--	--	--			17800	1476			--	1	20 A	BODY LTG	22
23	--	--	--	--					17800	1834	--	1	20 A	BODY LTG	24
25	SM-1 SHEAR	20 A	3	--	2933	948					--	1	20 A	PAINT BOTH LTG	26
27	--	--	--	--			2933	711			--	1	20 A	VAC, STOR, PAINT MIX LTG	28
29	--	--	--	--					2933	1600	--	1	20 A	WALL LTG	30
31	SM-6 VERTICAL BAND SAW	20 A	3	--	1267	1600					--	1	20 A	WALL LTG	32
33	--	--	--	--			1267	1200			--	1	20 A	WALL LTG	34
35	--	--	--	--					1267	0	--	1	20 A	Spare	36
37	SM-20 OVERHEAD CRANE	20 A	3	--	1493	7540					--	3	70 A	PANEL 5LL (VIA XFMR 5TH)	38
39	--	--	--	--			1493	6280			--	--	--	--	40
41	--	--	--	--					1493	5990	--	--	--	--	42
				Total Load:	50.88 kVA		52.51 kVA		51.86 kVA						
				Total Amps:	184 A		190 A		188 A						

Load Classification	Connected Load	Demand Factor	Estimated Demand	Panel Totals	
Spare	155259 VA	100.00%	155259 VA		
				Total Conn. Load:	155259 VA
				Total Est. Demand:	155259 VA
				Total Conn.:	187 A
				Total Est. Demand:	187 A

CB Legend (blank = circuit breaker):
G = GFCI S = Shunt Trip D = Switching Duty A = AFCI H = HID Rated C = HACR Rated † = Existing Circuit ‡ = Revised Circuit
Notes:

KEY NOTES:

1 EXISTING EQUIPMENT TO BE REPLACED.

4LC	5HA
5HE	5HJ

REGISTERED PROFESSIONAL ENGINEER PAUL K. ERICSON No. 11219 exp.06/30/2025 ELECTRICAL STATE OF CALIFORNIA

05-13-2024

Stantec
801 S. Figueroa Street, Suite 300
Los Angeles, CA 90017

Copyright Reserved
The Contractor shall verify and be responsible for all dimensions. DO NOT scale the drawing - any errors or omissions shall be reported to Stantec without delay.
The Copyrights to all designs and drawings are the property of Stantec. Reproduction or use for any purpose other than that authorized by Stantec is forbidden.

REVISION	DESCRIPTION	DATE
4	100% RESUBMITTAL	05/13/2024
3	100% CONSTRUCTION DRAWING SUBMITTAL	03/27/2024
2	90% UPDATED CONSTRUCTION SUBMITTAL	02/13/2024
1	90% CONSTRUCTION DRAWING SUBMITTAL	12/07/2023

REPLACEMENT OF MECHANICAL UNITS AT SANTA ANA BUS BASE

4301 W. MAC ARTHUR BLVD., SANTA ANA, CA

PANEL SCHEDULES

JOB #:
DESIGN BY: IZ
DRAWN BY: AD
CHECKED BY: PKE
DATE: 02/13/2024
SCALE: NTS
SHEET: **E-700D**

OCTA
ORANGE COUNTY
TRANSPORTATION AUTHORITY
550 SOUTH MAIN STREET, ORANGE, CA

Autodesk Docs://2014233703_Santa_Ana_Bus/elec_SantaAnaBus_2014233703.rvt
5/8/2024 9:59:47 AM

Stantec Panel

Name: **5LD**	Volts: 208Y/120V	Mains Type: MLO	Type:
Location: RUNNING REPAIR AREA 178	Phases: 3	Mains Rating: 225 A	AIC Rating: 10K
Supply From: 5LC	Wires: 4	Max Rating: 225 A	Mounting: Surface
Serves:		Lugs: Single Lugs	Enclosure: Type 1

Notes:

CKT	Circuit Description	Trip	Poles	CB	A		B		C		CB	Poles	Trip	Circuit Description	CKT	Key Note
1	Spare	20 A	1	--	0	50					--	1	20 A	SOLENOID	2	
3	Spare	20 A	1	--			0	50			--	1	20 A	SOLENOID	4	
5	RECEPTACLES DROP	20 A	1	--					360	**276**	**--**	1	20 A	**EF 5-39**	6	1
7	B-4 BATTERY CHARGER	20 A	1	--	500	0					--	1	20 A	Spare	8	
9	RECEPTACLES DROP	20 A	1	--			360	360			--	1	20 A	RECEPTACLES DROP	10	
11	RECEPTACLES DROP	20 A	1	--					360	360	--	1	20 A	RECEPTACLES DROP	12	
13	RECEPTACLES DROP	20 A	1	--	360	360					--	1	20 A	RECEPTACLES DROP	14	
15	RECEPTACLES DROP	20 A	1	--			360	360			--	1	20 A	RECEPTACLES DROP	16	
17	PR-27 FLUID MANAGEMENT	20 A	1	--					500	1375	--	2	20 A	PR-14 FILTER CRUSHER	18	
19	PR-25 PARTS WASHER	20 A	1	--	670	1375					--	--	--	--	20	
21	PR-27 FLUID MANAGEMENT	20 A	1	--			500	530			--	1	20 A	DRINKING FOUNTAIN DF 5-2	22	
23	PR-25 PARTS WASHER	20 A	1	--					670	180	--	1	20 A	ROOF RECEPTACLES	24	
25	RECEPTACLE B-4	20 A	1	--	180	1590					--	1	20 A	OVERHEAD SECT. DOOR	26	
27	PR-27 FLUID MANAGEMENT	20 A	1	--			500	1590			--	1	20 A	OVERHEAD SECT. DOOR	28	
29	RECEPTACLES	20 A	1	--					360	1590	--	1	20 A	OVERHEAD SECT. DOOR	30	
31	RECEPTACLES	20 A	1	--	360	1590					--	1	20 A	OVERHEAD SECT. DOOR	32	
33	WASTE OIL ALARM	20 A	1	--			0	1590			--	1	20 A	OVERHEAD SECT. DOOR	34	
35	Spare	20 A	1	--					0	1590	--	1	20 A	OVERHEAD SECT. DOOR	36	
37	Spare	20 A	1	--	0	1590					--	1	20 A	OVERHEAD SECT. DOOR	38	
39	Spare	20 A	1	--			0	0			--	1	20 A	Spare	40	
41	Spare	20 A	1	--					0	0	--	1	20 A	Spare	42	
				Total Load:	**8.63 kVA**		**6.20 kVA**		**7.62 kVA**							
				Total Amps:	**74 A**		**52 A**		**65 A**							

Load Classification	Connected Load	Demand Factor	Estimated Demand	Panel Totals	
Spare	22446 VA	100.00%	22446 VA		
				Total Conn. Load:	**22446 VA**
				Total Est. Demand:	**22446 VA**
				Total Conn.:	**62 A**
				Total Est. Demand:	**62 A**
				Existing Total Conn. Load:	**22670 VA**
				Existing Total Conn:	**63 A**

CB Legend (blank = circuit breaker):
G = GFCI S = Shunt Trip D = Switching Duty A = AFCI H = HID Rated C = HACR Rated † = Existing Circuit ‡ = Revised Circuit
Notes:

Stantec Panel

Name: **5LG**	Volts: 208Y/120V	Mains Type: MLO	Type:
Location: REBUILD 106	Phases: 3	Mains Rating: 225 A	AIC Rating: 10K
Supply From: 5LF	Wires: 4	Max Rating: 225 A	Mounting: Surface
Serves:		Lugs: Single Lugs	Enclosure: Type 1

Notes:

CKT	Circuit Description	Trip	Poles	CB	A		B		C		CB	Poles	Trip	Circuit Description	CKT	Key Note
1	RECEPTACLES	20 A	1	--	180	670					--	1	20 A	RB-25 JIB CRANE	2	
3	RECEPTACLES	20 A	1	--			180	670			--	1	20 A	RB-25 JIB CRANE	4	
5	RECEPTACLES	20 A	1	--					180	670	--	1	20 A	RB-25 JIB CRANE	6	
7	RECEPTACLES	20 A	1	--	540	670					--	1	20 A	RB-25 JIB CRANE	8	
9	RECEPTACLES	20 A	1	--			540	1000			--	1	20 A	EL-2 BUFFER/GRINDER	10	
11	RECEPTACLES	20 A	1	--					360	180	--	1	20 A	EL-12 WORKBENCH	12	
13	RB-1 WORKBENCH	20 A	1	--	360	360					--	1	20 A	RECEPTACLES	14	
15	RB-1 WORKBENCH	20 A	1	--			180	360			--	1	20 A	RECEPTACLES	16	
17	RB-1 WORKBENCH	20 A	1	--					180	180	--	1	20 A	RECEPTACLES	18	
19	RB-1 WORKBENCH	20 A	1	--	180	180					--	1	20 A	EL-1 WORKBENCH W/VISE	20	
21	RB-1 WORKBENCH	20 A	1	--			180	**2143**			**--**	2	**30 A**	**HP 5-1**	22	1
23	REC. OFFICE	20 A	1	--					180	**2143**	**--**	**--**	**--**	**--**	24	
25	REC. OFFICE	20 A	1	--	180	510					--	1	20 A	UH 5-5	26	
27	RB-8 BUFFER/GRINDER	20 A	1	--			1000	510			--	1	20 A	UH 5-9	28	
29	RB-21 DRILL PRESS	20 A	1	--					1590	0	--	1	20 A	Spare	30	
31	RB-3 TRANSM. DRAIN TABLE	20 A	1	--	540	0					--	1	20 A	Spare	32	
33	RB-3 TRANSM. DRAIN TABLE	20 A	1	--			540	0			--	1	20 A	Spare	34	
35	RB-3 TRANSM. DRAIN TABLE	20 A	1	--					360	0	--	1	20 A	Spare	36	
37	RB-7 PARTS WASHER	20 A	1	--	180	0					--	1	20 A	Spare	38	
39	Spare	20 A	1	--			0	0			--	1	20 A	Spare	40	
41	Spare	20 A	1	--					0	0	--	1	20 A	Spare	42	
				Total Load:	**4.55 kVA**		**7.30 kVA**		**6.02 kVA**							
				Total Amps:	**38 A**		**63 A**		**52 A**							

Load Classification	Connected Load	Demand Factor	Estimated Demand	Panel Totals	
Spare	17876 VA	100.00%	17876 VA		
				Total Conn. Load:	**17876 VA**
				Total Est. Demand:	**17876 VA**
				Total Conn.:	**50 A**
				Total Est. Demand:	**50 A**
				Existing Total Conn. Load:	**16630 VA**
				Existing Total Conn:	**46 A**

CB Legend (blank = circuit breaker):
G = GFCI S = Shunt Trip D = Switching Duty A = AFCI H = HID Rated C = HACR Rated † = Existing Circuit ‡ = Revised Circuit
Notes:

Stantec Panel

Name: **5LH**	Volts: 208Y/120V	Mains Type: MCB	Type:
Location: ELECTRICAL RM 137	Phases: 3	Mains Rating: 225 A	AIC Rating: 10K
Supply From: 5HE	Wires: 4	MCB Rating: 100 A	Mounting: Surface
Serves:		Lugs: Single Lugs	Enclosure: Type 1

Notes:

CKT	Circuit Description	Trip	Poles	CB	A		B		C		CB	Poles	Trip	Circuit Description	CKT	Key Note
1	RECEPTACLES	20 A	1	--	540	1040					--	2	20 A	AIR DRYER	2	
3	RECEPTACLES	20 A	1	--			540	1040			--	--	--	--	4	
5	RECEPTACLES	20 A	1	--					540	1040	--	2	20 A	AIR DRYER	6	
7	RECEPTACLES	20 A	1	--	360	1040					--	--	--	--	8	
9	RECEPTACLES	20 A	1	--			180	300			--	1	20 A	PANEL LCP5A	10	
11	RECEPTACLES	20 A	1	--					180	385	--	1	20 A	UH 5-1	12	
13	RECEPTACLES	20 A	1	--	720	1590					--	1	20 A	OVERHEAD SECT. DOOR	14	
15	RECEPTACLES	20 A	1	--			720	100			--	1	20 A	AUT. DRAIN VALVES	16	
17	RECEPTACLES	20 A	1	--					540	800	--	1	20 A	FIRE BELL	18	
19	F.A.C.P	20 A	1	--	0	800					--	1	20 A	F/A PNL	20	
21	Spare	20 A	1	--			0	800			--	1	20 A	MTC	22	
23	L.N.G. PANEL	20 A	1	--					0	670	--	1	20 A	EF 5-30 (1/4)	24	
25	L.N.G. U.P.S	20 A	1	--	0	**180**					**--**	1	20 A	**EF 5-32 (1/10)**	26	1
27	Space	--	1	--			--	0			--	1	20 A	Spare	28	
29	Space	--	1	--					--	0	--	1	20 A	Spare	30	
31	Space	--	1	--	--	--					--	1	--	Space	32	
33	Space	--	1	--			--	--			--	1	--	Space	34	
35	Space	--	1	--					--	--	--	1	--	Space	36	
37	Space	--	1	--	--	--					--	1	--	Space	38	
39	Space	--	1	--			--	--			--	1	--	Space	40	
41	Space	--	1	--					--	--	--	1	--	Space	42	
				Total Load:	**6.27 kVA**		**3.68 kVA**		**4.16 kVA**							
				Total Amps:	**53 A**		**31 A**		**35 A**							

Load Classification	Connected Load	Demand Factor	Estimated Demand	Panel Totals	
Spare	14105 VA	100.00%	14105 VA		
				Total Conn. Load:	**14105 VA**
				Total Est. Demand:	**14105 VA**
				Total Conn.:	**39 A**
				Total Est. Demand:	**39 A**
				Existing Total Conn. Load:	**14165 VA**
				Existing Total Conn:	**39 A**

CB Legend (blank = circuit breaker):
G = GFCI S = Shunt Trip D = Switching Duty A = AFCI H = HID Rated C = HACR Rated † = Existing Circuit ‡ = Revised Circuit
Notes:

Stantec Panel

Name: **5LJ**	Volts: 208Y/120V	Mains Type: MCB	Type:
Location: BUILDING MAINTENANCE 150	Phases: 3	Mains Rating: 225 A	AIC Rating: 10K
Supply From: 5HG	Wires: 4	MCB Rating: 150 A	Mounting: Surface
Serves:		Lugs: Single Lugs	Enclosure: Type 1

Notes:

CKT	Circuit Description	Trip	Poles	CB	A		B		C		CB	Poles	Trip	Circuit Description	CKT	Key Note
1	BM-1 WORKBENCH W/VISE	20 A	1	--	180	180					--	1	20 A	M-1 WORKBENCH W/VISE	2	
3	BM-1 WORKBENCH W/VISE	20 A	1	--			180	180			--	1	20 A	M-1 WORKBENCH W/VISE	4	
5	BM-1 WORKBENCH W/VISE	20 A	1	--					180	1000	--	1	20 A	M-6 BUFFER/GRINDER	6	
7	BM-1 WORKBENCH W/VISE	20 A	1	--	180	1150					--	2	20 A	M-7 HORIZONTAL BAND SAW	8	
9	BM-2 DRILL PRESS	20 A	1	--			1600	1150			--	--	--	--	10	
11	BM-3 VERTICAL BAND SAW	20 A	1	--					180	1130	--	1	20 A	M-8 VERTICAL BAND SAW	12	
13	BM-6 DUST COLLECTOR	40 A	1	--	1840	180					--	1	20 A	PLASMA CUTTER M-13	14	
15	BM-5 BUFFER GRINDER	20 A	1	--			1000	1000			--	1	40 A	M-9 BELT DISC SANDER	16	
17	BM-6 BELT/DISC SANDER	40 A	1	--					4140	720	--	1	20 A	RECEPTACLES	18	
19	BM-18 COMP. MITRE SAW	40 A	1	--	1840	1080					--	1	20 A	RECEPTACLES	20	
21	BM-19 PIPE THREADING	20 A	1	--			1130	1080			--	1	20 A	RECEPTACLES	22	
23	REC. OFFICE #149	20 A	1	--					180	900	--	1	20 A	RECEPTACLES	24	
25	RECEPTACLES	20 A	1	--	360	1590					--	1	20 A	OVERHEAD SECT. DOOR	26	
27	RECEPTACLES	20 A	1	--			360	1590			--	1	20 A	OVERHEAD SECT. DOOR	28	
29	RECEPTACLES	20 A	1	--					360	510	--	1	20 A	UH 5-10	30	
31	RECEPTACLES	20 A	1	--	360	1840					--	1	40 A	M-25 FUME EXTRACTOR	32	
33	RECEPTACLES	20 A	1	--			360	**1737**			**--**	2	**25 A**	**AC 5-1**	34	1
35	RECEPTACLES	20 A	1	--					180	**1737**	**--**	**--**	**--**	**--**	36	
37	RECEPTACLES	20 A	1	--	540	900					--	3	20 A	M-5 DRILL PRESS	38	
39	RECEPTACLES	20 A	1	--			360	900			--	--	--	--	40	
41	RECEPTACLES	20 A	1	--					360	900	--	--	--	--	42	
				Total Load:	**12.22 kVA**		**12.63 kVA**		**12.48 kVA**							
				Total Amps:	**102 A**		**106 A**		**104 A**							

Load Classification	Connected Load	Demand Factor	Estimated Demand	Panel Totals	
Spare	37324 VA	100.00%	37324 VA		
				Total Conn. Load:	**37324 VA**
				Total Est. Demand:	**37324 VA**
				Total Conn.:	**104 A**
				Total Est. Demand:	**104 A**
				Existing Total Conn. Load:	**36970 VA**
				Existing Total Conn:	**103 A**

CB Legend (blank = circuit breaker):
G = GFCI S = Shunt Trip D = Switching Duty A = AFCI H = HID Rated C = HACR Rated † = Existing Circuit ‡ = Revised Circuit
Notes:

KEY NOTES:

1 EXISTING EQUIPMENT TO BE REPLACED.

5LD	5LG
5LH	5LG

PAUL K. ERICSON
REGISTERED PROFESSIONAL ENGINEER
No. 11219
exp.06/30/2025
ELECTRICAL
STATE OF CALIFORNIA

05-13-2024

Stantec
801 S. Figueroa Street, Suite 300
Los Angeles, CA 90017

Copyright Reserved
The Contractor shall verify and be responsible for all dimensions. DO NOT scale the drawing - any errors or omissions shall be reported to Stantec without delay.
The Copyrights to all designs and drawings are the property of Stantec. Reproduction or use for any purpose other than that authorized by Stantec is forbidden.

REVISION	DESCRIPTION	DATE
4	100% RESUBMITTAL	05/13/2024
3	100% CONSTRUCTION DRAWING SUBMITTAL	03/27/2024
2	90% UPDATED CONSTRUCTION SUBMITTAL	02/13/2024
1	90% CONSTRUCTION DRAWING SUBMITTAL	12/07/2023

REPLACEMENT OF MECHANICAL UNITS AT SANTA ANA BUS BASE
4301 W. MAC ARTHUR BLVD., SANTA ANA, CA

PANEL SCHEDULES

JOB #:	
DESIGN BY:	IZ
DRAWN BY:	AD
CHECKED BY:	PKE
DATE:	02/13/2024
SCALE:	NTS
SHEET:	**E-701D**

OCTA
ORANGE COUNTY
TRANSPORTATION AUTHORITY
550 SOUTH MAIN STREET, ORANGE, CA

IFB 4-2550 EXHIBIT B

Panel 5LK

Stantec — Panel

Name: **5LK** | Volts: 208Y/120V | Mains Type: MCB | Type:
Location: STORAGE 155 | Phases: 3 | Mains Rating: 225 A | AIC Rating: 10K
Supply From: 5HH (VIA XFMR 5TG) | Wires: 4 | MCB Rating: 150 A | Mounting: Surface
Serves: | Lugs: Single Lugs | Enclosure: Type 1

Notes:

CKT	Circuit Description	Trip	Poles	CB	A		B		C		CB	Poles	Trip	Circuit Description	CKT
1	CAMERAS 6, 7, 8 & 9	20 A	1	--	600	180					--	1	20 A	REC. MANAGER OFFICE	2
(1) 3	**EF 5-40**	20 A	**1**	**--**			**420**	180			--	1	20 A	REC. OFFICE	4
5	RECEPTACLES	20 A	1	--					0	360	--	1	20 A	RECEPTACLES COUNTER	6
7	RECEPTACLES	20 A	1	--	540	1000					--	1	20 A	REFRIGERATOR	8
9	RECEPTACLES	20 A	1	--			540	1200			--	1	20 A	MICROWAVE	10
11	RECEPTACLES	20 A	1	--					540	1200	--	1	20 A	MICROWAVE	12
13	RECEPTACLES	20 A	1	--	720	1590					--	1	20 A	GARBAGE DISPOSAL	14
15	RECEPTACLES	20 A	1	--			720	1300			--	1	20 A	HOT WATER DISPENSER	16
17	RECEPTACLES	20 A	1	--					720	900	--	1	20 A	RECEPTACLES RESTROOMS	18
19	RECEPTACLES	20 A	1	--	720	540					--	1	20 A	RECEPTACLES	20
21	RECEPTACLES	20 A	1	--			720	360			--	1	20 A	RECEPTACLES	22
23	RECEPTACLES	20 A	1	--					720	360	--	1	20 A	RECEPTACLES	24
25	SHREDDER	25 A	3	--	1267	540					--	1	20 A	RECEPTACLES	26
27	--	--	--	--			1267	540			--	1	20 A	RECEPTACLES	28
29	--	--	--	--					1267	540	--	1	20 A	RECEPTACLES	30
31	MASTER DOOR CTRL PNL	20 A	1	--	500	1130					--	1	20 A	COILING DOOR	32
33	MASTER INTERCOM CTRL PNL	20 A	1	--			500	1130			--	1	20 A	COILING DOOR	34
35	Spare	20 A	1	--					0	1200	--	1	20 A	DOCK LEVELER	36
37	PANEL 5UC	30 A	2	--	720	1860					--	3	40 A	PANEL 5LS	38
39	--	--	--	--			1080	1530			--	--	--	--	40
41	Spare	20 A	1	--					0	1920	--	--	--	--	42
				Total Load:	**11.91 kVA**		**11.49 kVA**		**9.73 kVA**						
				Total Amps:	**101 A**		**98 A**		**81 A**						

Load Classification	Connected Load	Demand Factor	Estimated Demand
Spare	33121 VA	100.00%	33121 VA

Panel Totals	
Total Conn. Load:	**33121 VA**
Total Est. Demand:	**33121 VA**
Total Conn.:	**92 A**
Total Est. Demand:	**92 A**
Existing Total Conn. Load:	**33651 VA**
Existing Total Conn:	**93 A**

CB Legend (blank = circuit breaker):
G = GFCI S = Shunt Trip D = Switching Duty A = AFCI H = HID Rated C = HACR Rated † = Existing Circuit ‡ = Revised Circuit

Notes:

Panel 5LM

Stantec — Panel

Name: **5LM** | Volts: 208Y/120V | Mains Type: MCB | Type:
Location: COMPONENT EXCHANGE 148 | Phases: 3 | Mains Rating: 225 A | AIC Rating: 10K
Supply From: 5HK (VIA TFMR 5TJ) | Wires: 4 | MCB Rating: 150 A | Mounting: Surface
Serves: | Lugs: Single Lugs | Enclosure: Type 1

Notes:

CKT	Circuit Description	Trip	Poles	CB	A		B		C		CB	Poles	Trip	Circuit Description	CKT
1	SR-1 BUFFER GRINDER	20 A	1	--	1000	0					--	1	20 A	Spare	2
3	SR-2 SMALL PARTS CLEANER	20 A	1	--			1130	670			--	1	20 A	SR-9 JIB CRANE	4
5	SR-7 WORKBENCH W/VISE	20 A	1	--					180	180	--	1	20 A	CE-11 WORKBENCH W/VISE	6
7	SR-7 WORKBENCH W/VISE	20 A	1	--	180	180					--	1	20 A	CE-11 WORKBENCH W/VISE	8
9	SR-7 WORKBENCH W/VISE	20 A	1	--			180	180			--	1	20 A	CE-14 FLUID MANAGEMENT	10
11	SR-8 PARTS WASHER	20 A	1	--					670	0	--	1	20 A	Spare	12
13	RECEPTACLES	20 A	1	--	540	360					--	1	20 A	RECEPTACLES	14
15	RECEPTACLES	20 A	1	--			540	360			--	1	20 A	RECEPTACLES	16
17	RECEPTACLES	20 A	1	--					360	360	--	1	20 A	RECEPTACLES	18
19	RECEPTACLES	20 A	1	--	540	360					--	1	20 A	RECEPTACLES	20
21	RECEPTACLES	20 A	1	--			540	360			--	1	20 A	RECEPTACLES	22
23	RECEPTACLES	20 A	1	--					360	180	--	1	20 A	RECEPTACLES	24
25	REC. NETWORK RACK	20 A	1	--	360	1200					--	1	20 A	UP-5 SEWING MACHINE STA.	26
27	REC. NETWORK RACK	20 A	1	--			360	540			--	1	20 A	RECEPTACLES	28
29	REC. NETWORK RACK	20 A	1	--					360	360	--	1	20 A	RECEPTACLES	30
(1) 31	**RTU 5-4**	40 A	2	**--**	**2965**	1590					--	1	20 A	OVERHEAD SECT. DOOR	32
33	--	**--**	**--**	**--**			**2965**	0			--	1	20 A	Spare	34
(1) 35	**RTU 5-5**	40 A	2	**--**					**2965**	670	--	1	20 A	COILING DOOR	36
37	--	**--**	**--**	**--**	**2965**	1130					--	1	20 A	COILING DOOR	38
39	EF 5-23 (1/4)	20 A	1	--			670	300			--	1	20 A	FA REMOTE PWR SUPPLY	40
41	ROOF RECEPTACLES	20 A	1	--					720	510	--	1	20 A	Spare	42
				Total Load:	**13.37 kVA**		**8.80 kVA**		**7.88 kVA**						
				Total Amps:	**113 A**		**74 A**		**66 A**						

Load Classification	Connected Load	Demand Factor	Estimated Demand
Spare	30040 VA	100.00%	30040 VA

Panel Totals	
Total Conn. Load:	**30040 VA**
Total Est. Demand:	**30040 VA**
Total Conn.:	**83 A**
Total Est. Demand:	**83 A**
Existing Total Conn. Load:	**25680 VA**
Existing Total Conn:	**71 A**

CB Legend (blank = circuit breaker):
G = GFCI S = Shunt Trip D = Switching Duty A = AFCI H = HID Rated C = HACR Rated † = Existing Circuit ‡ = Revised Circuit

Notes:

KEY NOTES:

1 EXISTING EQUIPMENT TO BE REPLACED.

Panel 5LN

Stantec — Panel

Name: **5LN** | Volts: 208Y/120V | Mains Type: MCB | Type:
Location: CLEAN SHOP 141 | Phases: 3 | Mains Rating: 225 A | AIC Rating: 10K
Supply From: 5HL (VIA XFMR 5TK) | Wires: 4 | MCB Rating: 100 A | Mounting: Surface
Serves: | Lugs: Single Lugs | Enclosure: Type 1

Notes:

CKT	Circuit Description	Trip	Poles	CB	A		B		C		CB	Poles	Trip	Circuit Description	CKT
1	RECEPTACLES	20 A	1	--	900	300					--	1	20 A	BR-1 BRAKE LATHE (CNC)	2
3	RECEPTACLES	20 A	1	--			900	300			--	1	20 A	BR-2 BRAKE LATHE (STAR)	4
5	RECEPTACLES	20 A	1	--					900	300	--	1	20 A	BR-2 BRAKE LATHE (STAR)	6
7	BR-4 WORKBENCH	20 A	1	--	180	300					--	1	20 A	BR-2 BRAKE LATHE (STAR)	8
9	BR-4 WORKBENCH	20 A	1	--			180	**420**			**--**	1	20 A	**EF 5-38 (1/4)**	10 (1)
11	BR-17 JIB CRANE	20 A	1	--					670	510	--	1	20 A	BR-9 DUST COLLECTOR	12
13	BR-17 JIB CRANE	20 A	1	--	670	1130					--	1	20 A	BR-11 ADJ WORK TABLE	14
15	BR-8	20 A	1	--			0	1130			--	1	20 A	BR-14 TOOL BIT GRINDER	16
17	Spare	20 A	1	--					0	1840	--	1	40 A	BR-15 PALLET WRAPPER	18
19	PC-12 JIB CRANE	20 A	3	--	1800	180					--	1	20 A	BR-16 ELECTRIC LIFT TRUCK	20
21	--	--	--	--			0	300			--	1	20 A	BR-2 BRAKE LATHE (STAR)	22
23	--	--	--	--					0	0	--	1	20 A	Spare	24
25	Space	--	1	--	--	830					--	1	20 A	PC-2 ABRASIVE PARTS WASH	26
27	Space	--	1	--			--	830			--	1	20 A	PC-2 ABRASIVE PARTS WASH	28
29	Space	--	1	--					--	0	--	1	20 A	Spare	30
31	Space	--	1	--	--	1130					--	1	20 A	COILING DOOR	32
33	Space	--	1	--			--	510			--	1	20 A	UH 5-6	34
35	Space	--	1	--					--	510	--	1	20 A	UH 5-7	36
37	Space	--	1	--	--	--					--	1	--	Space	38
39	Space	--	1	--			--	--			--	1	--	Space	40
41	Space	--	1	--					--	--	--	1	--	Space	42
				Total Load:	**7.42 kVA**		**4.57 kVA**		**4.73 kVA**						
				Total Amps:	**62 A**		**38 A**		**40 A**						

Load Classification	Connected Load	Demand Factor	Estimated Demand
Spare	16720 VA	100.00%	16720 VA

Panel Totals	
Total Conn. Load:	**16720 VA**
Total Est. Demand:	**16720 VA**
Total Conn.:	**46 A**
Total Est. Demand:	**46 A**
Existing Total Conn. Load:	**16970 VA**
Existing Total Conn:	**47 A**

CB Legend (blank = circuit breaker):
G = GFCI S = Shunt Trip D = Switching Duty A = AFCI H = HID Rated C = HACR Rated † = Existing Circuit ‡ = Revised Circuit

Notes:

Panel 5LP

Stantec — Panel

Name: **5LP** | Volts: 208Y/120V | Mains Type: MLO | Type:
Location: ELECTRICAL RM 202 | Phases: 3 | Mains Rating: 225 A | AIC Rating: 10K
Supply From: DB5B | Wires: 4 | Max Rating: 225 A | Mounting: Surface
Serves: | Lugs: Single Lugs | Enclosure: Type 1

Notes:

CKT	Circuit Description	Trip	Poles	CB	A		B		C		CB	Poles	Trip	Circuit Description	CKT
1	REC. REBUILD OFFICE	20 A	1	--	180	180					--	1	20 A	REC. MANAGER OFFICE	2
3	REC. INTERNS OFFICE	20 A	1	--			360	180			--	1	20 A	REC. ASSIST. OFFICE	4
5	PROJECTION SCREEN	20 A	1	--					510	1000	--	1	20 A	REFRIGERATOR	6
7	RECEPTACLES	20 A	1	--	900	1200					--	1	20 A	MICROWAVE	8
9	RECEPTACLES	20 A	1	--			540	180			--	1	20 A	RECEPTACLE COUNTER	10
11	RECEPTACLES	20 A	1	--					540	1200	--	1	20 A	GARBAGE DISPOSAL	12
13	RECEPTACLES	20 A	1	--	720	720					--	1	20 A	RECEPTACLES	14
15	RECEPTACLES	20 A	1	--			900	720			--	1	20 A	RECEPTACLES	16
17	RECEPTACLES	20 A	1	--					720	720	--	1	20 A	RECEPTACLES	18
19	RECEPTACLES	20 A	1	--	720	360					--	1	20 A	RECEPTACLES	20
21	RECEPTACLES	20 A	1	--			720	540			--	1	20 A	RECEPTACLES	22
23	RECEPTACLES	20 A	1	--					540	360	--	1	20 A	RECEPTACLES	24
25	ROOF RECPT.	20 A	1	--	0	900					--	1	20 A	RECEPTACLES RESTROOM	26
27	Spare	20 A	1	--			0	500			--	1	20 A	DRINKING FOUNTAIN	28
29	Spare	20 A	1	--					0	1300	--	1	20 A	COPIER	30
31	PANEL 5LW	50 A	3	--	1080	**156**					**--**	1	20 A	**EF 5-11 (1/15)**	32 (1)
33	--	--	--	--			900	55			--	1	20 A	EF 5-12 (1/15)	34
35	--	--	--	--					720	**420**	**--**	1	20 A	**EF 5-13 (1/4)**	36 (1)
37	PANEL 5U	40 A	2	--	2340	55					--	1	20 A	EF -14 (1/15)	38
39	--	--	--	--			2160	55			--	1	20 A	EF 5-15 (1/15)	40
41	HOT WATER DISPENSER	20 A	1	--					1300	20	--	1	20 A	BD-1 BY-PASS DAMPER	42
				Total Load:	**9.51 kVA**		**7.81 kVA**		**9.35 kVA**						
				Total Amps:	**81 A**		**65 A**		**80 A**						

Load Classification	Connected Load	Demand Factor	Estimated Demand
Spare	26671 VA	100.00%	26671 VA

Panel Totals	
Total Conn. Load:	**26671 VA**
Total Est. Demand:	**26671 VA**
Total Conn.:	**74 A**
Total Est. Demand:	**74 A**
Existing Total Conn. Load:	**26775 VA**
Existing Total Conn:	**74 A**

CB Legend (blank = circuit breaker):
G = GFCI S = Shunt Trip D = Switching Duty A = AFCI H = HID Rated C = HACR Rated † = Existing Circuit ‡ = Revised Circuit

Notes:

5LK	5LM
5LN	5LP

REGISTERED PROFESSIONAL ENGINEER
PAUL K. ERICSON
No. 11219
exp.06/30/2025
ELECTRICAL
STATE OF CALIFORNIA

05-13-2024

Stantec
801 S. Figueroa Street, Suite 300
Los Angeles, CA 90017

Copyright Reserved
The Contractor shall verify and be responsible for all dimensions. DO NOT scale the drawing - any errors or omissions shall be reported to Stantec without delay.
The Copyrights to all designs and drawings are the property of Stantec. Reproduction or use for any purpose other than that authorized by Stantec is forbidden.

REVISION	DESCRIPTION	DATE
4	100% RESUBMITTAL	05/13/2024
3	100% CONSTRUCTION DRAWING SUBMITTAL	03/27/2024
2	90% UPDATED CONSTRUCTION SUBMITTAL	02/13/2024
1	90% CONSTRUCTION DRAWING SUBMITTAL	12/07/2023

REPLACEMENT OF MECHANICAL UNITS AT SANTA ANA BUS BASE

4301 W. MAC ARTHUR BLVD., SANTA ANA, CA

PANEL SCHEDULES

JOB #:
DESIGN BY: IZ
DRAWN BY: AD
CHECKED BY: PKE
DATE: 02/13/2024
SCALE: NTS
SHEET: **E-702D**

OCTA
ORANGE COUNTY TRANSPORTATION AUTHORITY
550 SOUTH MAIN STREET, ORANGE, CA

Stantec — Panel

Name:	**5LA**	Volts:	208Y/120V	Mains Type:	MLO	Type:	
Location:		Phases:	3	Mains Rating:	150 A	AIC Rating:	10K
Supply From:		Wires:	4	Max Rating:	150 A	Mounting:	Surface
Serves:				Lugs:	Single Lugs	Enclosure:	Type 1

Notes:

CKT	Circuit Description	Trip	Poles	CB	A	A	B	B	C	C	CB	Poles	Trip	Circuit Description	CKT	Key Note
1	RECEPTACLES	20 A	1	--	720	300					--	1	20 A	PANEL 'LPCSE'	2	
3	RECEPTACLES	20 A	1	--			720	300			--	1	20 A	CAMERAS 1&2	4	
5	PORTABLE LIGHT REC.	20 A	1	--					80	**768**	--	1	20 A	**EF 5-35**	6	1
7	WS 5-1	20 A	1	--	180	0					--	1	20 A	LIFT CONTROL	8	
9	Spare	20 A	1	--			0	0			--	1	20 A	Spare	10	
11	Spare	20 A	1	--					0	0	--	1	20 A	Spare	12	
13	Space	--	1	--	--	--					--	1	--	Space	14	
15	Space	--	1	--			--	--			--	1	--	Space	16	
17	Space	--	1	--					--	--	--	1	--	Space	18	
19	Space	--	1	--	--	--					--	1	--	Space	20	
21	Space	--	1	--			--	--			--	1	--	Space	22	
23	Space	--	1	--					--	--	--	1	--	Space	24	
25	Space	--	1	--	--	--					--	1	--	Space	26	
27	Space	--	1	--			--	--			--	1	--	Space	28	
29	Space	--	1	--					--	--	--	1	--	Space	30	
31	Space	--	1	--	--	--					--	1	--	Space	32	
33	Space	--	1	--			--	--			--	1	--	Space	34	
35	Space	--	1	--					--	--	--	1	--	Space	36	
37	Space	--	1	--	--	7135					--	3	100 A	PANEL 5LB	38	
39	Space	--	1	--			--	7510			--	--	--	--	40	
41	Space	--	1	--					--	5735	--	--	--	--	42	
				Total Load:	**8.34 kVA**		**8.53 kVA**		**6.58 kVA**							
				Total Amps:	**72 A**		**73 A**		**55 A**							

Load Classification	Connected Load	Demand Factor	Estimated Demand	Panel Totals	
Spare	23448 VA	100.00%	23448 VA		
				Total Conn. Load:	**23448 VA**
				Total Est. Demand:	**23448 VA**
				Total Conn.:	**65 A**
				Total Est. Demand:	**65 A**

CB Legend (blank = circuit breaker):
G = GFCI S = Shunt Trip D = Switching Duty A = AFCI H = HID Rated C = HACR Rated † = Existing Circuit ‡ = Revised Circuit

Notes:

Stantec — Panel

Name:	**5LQ**	Volts:	208Y/120V	Mains Type:	MLO	Type:	
Location:	SMALL TOOL RM 130	Phases:	3	Mains Rating:	225 A	AIC Rating:	10K
Supply From:	DB5B	Wires:	4	Max Rating:	225 A	Mounting:	Surface
Serves:				Lugs:	Single Lugs	Enclosure:	Type 1

Notes:

Key Note	CKT	Circuit Description	Trip	Poles	CB	A	A	B	B	C	C	CB	Poles	Trip	Circuit Description	CKT
	1	RECEPTACLES	20 A	1	--	900	1000					--	1	20 A	REFRIGERATOR	2
	3	RECEPTACLES	20 A	1	--			900	1000			--	1	20 A	REFRIGERATOR	4
	5	RECEPTACLES	20 A	1	--					900	360	--	1	20 A	RECEPTACLES COUNTER	6
	7	RECEPTACLES	20 A	1	--	540	1590					--	1	20 A	GARBAGE DISPOSAL	8
	9	RECEPTACLES	20 A	1	--			540	1300			--	1	20 A	WATER HEATER	10
	11	RECEPTACLES	20 A	1	--					540	1200	--	1	20 A	MICROWAVE	12
	13	RECEPTACLES	20 A	1	--	720	1200					--	1	20 A	MICROWAVE	14
	15	RECEPTACLES	20 A	1	--			540	1200			--	1	20 A	MICROWAVE	16
	17	RECEPTACLES	20 A	1	--					720	1200	--	1	20 A	VENDING MACHINE	18
	19	RECEPTACLES	20 A	1	--	720	1200					--	1	20 A	VENDING MACHINE	20
	21	RECEPTACLES	20 A	1	--			720	1200			--	1	20 A	VENDING MACHINE	22
	23	RECEPTACLES	20 A	1	--					900	1200	--	1	20 A	VENDING MACHINE	24
	25	REC. WARRANTY OFF.	20 A	1	--	540	1200					--	1	20 A	VENDING MACHINE	26
	27	REC. PARTS (EAST)	20 A	1	--			360	500			--	1	20 A	DRINING FOUNTAIN	28
	29	REC. PARTS OFFICE	20 A	1	--					180	1590	--	1	20 A	RR-20 FREON RECOVERY	30
	31	REC. PARTS (SOUTH)	20 A	1	--	360	360					--	1	20 A	RECEPTACLES	32
	33	UH 5-2	20 A	1	--			385	540			--	1	20 A	RECEPTACLES	34
	35	UH 5-3	20 A	1	--					385	540	--	1	20 A	RECEPTACLES	36
1	37	**AC 5-2**	**25 A**	2	**--**	**1737**	440					--	3	50 A	PANEL 5V	38
	39	**--**	**--**	**--**	**--**			**1737**	1300			--	--	--	--	40
	41	ROOF RECEPTACLES	20 A	1	--					720	720	--	--	--	--	42
					Total Load:	**12.51 kVA**		**12.22 kVA**		**11.16 kVA**						
					Total Amps:	**106 A**		**103 A**		**93 A**						

Load Classification	Connected Load	Demand Factor	Estimated Demand	Panel Totals	
Spare	35884 VA	100.00%	35884 VA		
				Total Conn. Load:	**35884 VA**
				Total Est. Demand:	**35884 VA**
				Total Conn.:	**100 A**
				Total Est. Demand:	**100 A**
				Existing Total Conn. Load:	**33530 VA**
				Existing Total Conn:	**99 A**

CB Legend (blank = circuit breaker):
G = GFCI S = Shunt Trip D = Switching Duty A = AFCI H = HID Rated C = HACR Rated † = Existing Circuit ‡ = Revised Circuit

Notes:

KEY NOTES:

1 EXISTING EQUIPMENT TO BE REPLACED.

Stantec — Panel

Name:	**5LS**	Volts:	208Y/120V	Mains Type:	MLO	Type:	
Location:	STORAGE 155	Phases:	3	Mains Rating:	100 A	AIC Rating:	10K
Supply From:	5LK	Wires:	4	Max Rating:	100 A	Mounting:	Surface
Serves:				Lugs:	Single Lugs	Enclosure:	Type 1

Notes:

CKT	Circuit Description	Trip	Poles	CB	A	A	B	B	C	C	CB	Poles	Trip	Circuit Description	CKT	Key Note
1	COIN COUNTER	20 A	1	--	500	**180**					**--**	1	20 A	**EF 5-26 (1/10)**	2	1
3	COIN COUNTER	20 A	1	--			500	30			--	1	20 A	EF 5-27 (1/40)	4	
5	CURRENCY STRAPPER	20 A	1	--					500	**420**	**--**	1	20 A	**EF 5-41 (1/4)**	6	1
7	COMPUTER PRINTER	20 A	1	--	500	180					--	1	20 A	ROOF RECEPTACLE	8	
9	COIN COUNTER	20 A	1	--			500	--			--	1	--	Space	10	
11	COIN COUNTER	20 A	1	--					500	--	--	1	--	Space	12	
13	CURRENCY STRAPPER	20 A	1	--	500	--					--	1	--	Space	14	
15	COIN COUNTER	20 A	1	--			500	--			--	1	--	Space	16	
17	COIN COUNTER	20 A	1	--					500	--	--	1	--	Space	18	
19	Space	--	1	--	--	--					--	1	--	Space	20	
21	Space	--	1	--			--	--			--	1	--	Space	22	
23	Space	--	1	--					--	--	--	1	--	Space	24	
25	Space	--	1	--	--	--					--	1	--	Space	26	
27	Space	--	1	--			--	--			--	1	--	Space	28	
29	Space	--	1	--					--	--	--	1	--	Space	30	
31	Space	--	1	--	--	--					--	1	--	Space	32	
33	Space	--	1	--			--	--			--	1	--	Space	34	
35	Space	--	1	--					--	--	--	1	--	Space	36	
37	Space	--	1	--	--	--					--	1	--	Space	38	
39	Space	--	1	--			--	--			--	1	--	Space	40	
41	Space	--	1	--					--	--	--	1	--	Space	42	
				Total Load:	**1.86 kVA**		**1.53 kVA**		**1.92 kVA**							
				Total Amps:	**16 A**		**13 A**		**16 A**							

Load Classification	Connected Load	Demand Factor	Estimated Demand	Panel Totals	
Spare	5310 VA	100.00%	5310 VA		
				Total Conn. Load:	**5310 VA**
				Total Est. Demand:	**5310 VA**
				Total Conn.:	**15 A**
				Total Est. Demand:	**15 A**
				Existing Total Conn. Load:	**5430 VA**
				Existing Total Conn:	**15 A**

CB Legend (blank = circuit breaker):
G = GFCI S = Shunt Trip D = Switching Duty A = AFCI H = HID Rated C = HACR Rated † = Existing Circuit ‡ = Revised Circuit

Notes:

Stantec — Panel

Name:	**5LT**	Volts:	240V/120V	Mains Type:	MCB	Type:	
Location:	ELECTRICAL RM 202	Phases:	1	Mains Rating:	225 A	AIC Rating:	10K
Supply From:	XFMR 5TM	Wires:	3	MCB Rating:	125 A	Mounting:	Surface
Serves:				Lugs:	Single Lugs	Enclosure:	Type 1

Notes:

Key Note	CKT	Circuit Description	Trip	Poles	CB	A	A	B	B	C	C	CB	Poles	Trip	Circuit Description	CKT
	1	OVERHEAD SECT. DOOR	20 A	1	--	1590	1590					--	1	20 A	OVERHEAD SECT. DOOR	2
	3	OVERHEAD SECT. DOOR	20 A	1	--			1590	1590			--	1	20 A	OVERHEAD SECT. DOOR	4
	5	OVERHEAD SECT. DOOR	20 A	1	--	1590	1590					--	1	20 A	OVERHEAD SECT. DOOR	6
	7	OVERHEAD SECT. DOOR	20 A	1	--			1590	1590			--	1	20 A	OVERHEAD SECT. DOOR	8
	9	OVERHEAD SECT. DOOR	20 A	1	--	1590	1590					--	1	20 A	OVERHEAD SECT. DOOR	10
	11	OVERHEAD SECT. DOOR	20 A	1	--			1590	0			--	1	20 A	HVAC TIME CLOCK	12
1	13	**EF 5-42**	20 A	1	**--**	**696**	0					--	1	20 A	Spare	14
	15	Space	--	1	--			--	--			--	1	--	Space	16
	17	Space	--	1	--	--	--					--	1	--	Space	18
	19	Space	--	1	--			--	--			--	1	--	Space	20
					Total Load:	**10.24 kVA**		**7.95 kVA**		**0.00 kVA**						
					Total Amps:	**85 A**		**66 A**		**0 A**						

Load Classification	Connected Load	Demand Factor	Estimated Demand	Panel Totals	
Spare	18186 VA	100.00%	18186 VA		
				Total Conn. Load:	**18186 VA**
				Total Est. Demand:	**18186 VA**
				Total Conn.:	**76 A**
				Total Est. Demand:	**76 A**
				Existing Total Conn. Load:	**18320 VA**
				Existing Total Conn:	**76 A**

CB Legend (blank = circuit breaker):
G = GFCI S = Shunt Trip D = Switching Duty A = AFCI H = HID Rated C = HACR Rated † = Existing Circuit ‡ = Revised Circuit

Notes:

5LA	5LQ
5LS	5LT

REGISTERED PROFESSIONAL ENGINEER
PAUL K. ERICSON
No. 11219
exp.06/30/2025
ELECTRICAL
STATE OF CALIFORNIA

05-13-2024

Stantec
801 S. Figueroa Street, Suite 300
Los Angeles, CA 90017

Copyright Reserved
The Contractor shall verify and be responsible for all dimensions. DO NOT scale the drawing - any errors or omissions shall be reported to Stantec without delay.
The Copyrights to all designs and drawings are the property of Stantec. Reproduction or use for any purpose other than that authorized by Stantec is forbidden.

REVISION	DESCRIPTION	DATE
4	100% RESUBMITTAL	05/13/2024
3	100% CONSTRUCTION DRAWING SUBMITTAL	03/27/2024
2	90% UPDATED CONSTRUCTION SUBMITTAL	02/13/2024
1	90% CONSTRUCTION DRAWING SUBMITTAL	12/07/2023

REPLACEMENT OF MECHANICAL UNITS AT SANTA ANA BUS BASE
4301 W. MAC ARTHUR BLVD., SANTA ANA, CA

PANEL SCHEDULES

JOB #:	
DESIGN BY:	IZ
DRAWN BY:	AD
CHECKED BY:	PKE
DATE:	02/13/2024
SCALE:	NTS
SHEET:	**E-703D**

OCTA
ORANGE COUNTY
TRANSPORTATION AUTHORITY
550 SOUTH MAIN STREET, ORANGE, CA

Stantec — Panel

Name: **6LB** | Volts: 208Y/120V | Mains Type: MLO | Type:
Location: | Phases: 3 | Mains Rating: 225 A | AIC Rating: 10
Supply From: | Wires: 4 | Max Rating: 225 A | Mounting: Surface
Serves: | Lugs: Single Lugs | Enclosure: Type 1

Notes:

CKT	Circuit Description	Trip	Poles	CB	A		B		C		CB	Poles	Trip	Circuit Description	CKT
1	**EF 6-4 (1/15)**	20 A	1	--	**156**	**3318**					--	2	**50 A**	**RTU 6-1**	2
3	EF 6-5 (1/60)	20 A	1	--			20	**3318**			--	--	--	--	4
5	**EF 6-6 (1/10)**	20 A	1	--					**180**	**2143**	--	2	40 A	**HP 6-1**	6
7	BC-14 FLUID MANAGEMENT	20 A	1	--	500	**2143**					--	--	--	--	8
9	**EF 6-8 (1/10)**	20 A	1	--			**180**	180			--	1	20 A	FACP-6	10
11	WATER HEATER/CIRC. PUMP	20 A	1	--					600	180	--	1	20 A	CC6	12
13	DRINIIKING FOUNTAIN	20 A	1	--	500	100					--	1	20 A	FUEL DISPENSER/CONT.	14
15	REC. OFFICE	20 A	1	--			360	100			--	1	20 A	FUEL DISPENSER/CONT.	16
17	RECEPTACLES DATA RACK	20 A	1	--					360	100	--	1	20 A	FUEL DISPENSER/CONT.	18
19	RECEPTACLES DATA RACK	20 A	1	--	360	100					--	1	20 A	FUEL DISPENSER/CONT.	20
21	RECEPTACLES DROP	20 A	1	--			360	100			--	1	20 A	FUEL DISPENSER/CONT.	22
23	RECEPTACLES DROP	20 A	1	--					360	1590	--	1	20 A	F-2 GASOLINE DISPENSER	24
25	RECEPTACLES	20 A	1	--	540	533					--	3	20 A	SP-1	26
27	RECEPTACLES	20 A	1	--			360	533			--	--	--	--	28
29	RECEPTACLES ROOF RTU-61	20 A	1	--					360	533	--	--	--	--	30
31	RECEPTACLES RESTROOM	20 A	1	--	360	150					--	1	20 A	AUTO DRAIN VALVES	32
33	RECEPTACLES PUMP ROOM	20 A	1	--			540	800			--	1	30 A	POWER SUPPLY CAMERAS	34
35	RECEPTACLES TELEPHONE	20 A	1	--					360	800	--	1	20 A	POWER SUPPLY CAMERAS	36
37	DRINIIKING FOUNTAIN	20 A	1	--	500	**1389**					--	2	**25 A**	**AC 6-1**	38
39	LAV/UR CONTROLS	20 A	1	--			300	**1389**			--	--	--	--	40
41	PHOTOSENSOR CTRL CAB.	20 A	1	--					100	100	--	1	20 A	FSD RM 116 & 118	42
				Total Load:	**10.65 kVA**		**8.54 kVA**		**7.77 kVA**						
				Total Amps:	**90 A**		**72 A**		**65 A**						

Load Classification	Connected Load	Demand Factor	Estimated Demand	Panel Totals	
Spare	26955 VA	100.00%	26955 VA	**Total Conn. Load:**	**26955 VA**
				Total Est. Demand:	**26955 VA**
				Total Conn.:	**75 A**
				Total Est. Demand:	**75 A**
				Existing Total Conn. Load:	**21984 VA**
				Existing Total Conn:	**61 A**

CB Legend (blank = circuit breaker):
G = GFCI S = Shunt Trip D = Switching Duty A = AFCI H = HID Rated C = HACR Rated † = Existing Circuit ‡ = Revised Circuit

Notes:

Stantec — Panel

Name: **8LA** | Volts: 208Y/120V | Mains Type: MCB | Type:
Location: DETAILING/CLEANING 101 | Phases: 3 | Mains Rating: 225 A | AIC Rating: 10
Supply From: 8HA (VIA XFMR 8TA) | Wires: 4 | MCB Rating: 100 A | Mounting: Surface
Serves: | Lugs: Single Lugs | Enclosure: Type 1

Notes:

CKT	Circuit Description	Trip	Poles	CB	A		B		C		CB	Poles	Trip	Circuit Description	CKT
1	RECEPTACLES	20 A	1	--	720	900					--	3	20 A	CL-11 WASHER	2
3	RECEPTACLES	20 A	1	--			720	900			--	--	--	--	4
5	RECEPTACLES	20 A	1	--					720	900	--	--	--	--	6
7	RECEPTACLES	20 A	1	--	500	900					--	3	20 A	CL-12 DRYER	8
9	RECEPTACLES	20 A	1	--			500	900			--	--	--	--	10
11	RECEPTACLES	20 A	1	--					500	900	--	--	--	--	12
13	RECEPTACLES	20 A	1	--	500	360					--	1	20 A	RECEPTACLES DROP	14
15	CAMERAS 12 & 13	20 A	1	--			300	360			--	1	20 A	RECEPTACLES DROP	16
17	Spare	20 A	1	--					0	360	--	1	20 A	RECEPTACLES DROP	18
19	Spare	20 A	1	--	0	360					--	1	20 A	RECEPTACLES DROP	20
21	Spare	20 A	1	--			0	0			--	1	20 A	Spare	22
23	Spare	20 A	1	--					0	**348**	--	1	20 A	**EF 8-1**	24
25	Spare	20 A	1	--	0	1120					--	1	20 A	VACUUM REEL	26
27	Spare	20 A	1	--			0	1120			--	1	20 A	VACUUM REEL	28
29	Spare	20 A	1	--					0	1120	--	1	20 A	VACUUM REEL	30
31	Spare	20 A	1	--	0	1120					--	1	20 A	VACUUM REEL	32
33	Spare	20 A	1	--			0	300			--	1	20 A	Spare	34
35	Spare	20 A	1	--					0	50	--	1	20 A	WATER HEATER	36
37	Space	--	1	--	--	50					--	1	20 A	DRAIN VALVE	38
39	Space	--	1	--			--	--			--	1	--	Space	40
41	Space	--	1	--					--	--	--	1	--	Space	42
				Total Load:	**6.53 kVA**		**5.10 kVA**		**4.90 kVA**						
				Total Amps:	**55 A**		**43 A**		**41 A**						

Load Classification	Connected Load	Demand Factor	Estimated Demand	Panel Totals	
Spare	16528 VA	100.00%	16528 VA	**Total Conn. Load:**	**16528 VA**
				Total Est. Demand:	**16528 VA**
				Total Conn.:	**46 A**
				Total Est. Demand:	**46 A**
				Existing Total Conn. Load:	**16850 VA**
				Existing Total Conn:	**47 A**

CB Legend (blank = circuit breaker):
G = GFCI S = Shunt Trip D = Switching Duty A = AFCI H = HID Rated C = HACR Rated † = Existing Circuit ‡ = Revised Circuit

Notes:

KEY NOTES:

1 EXISTING EQUIPMENT TO BE REPLACED.

REGISTERED PROFESSIONAL ENGINEER PAUL K. ERICSSON No. 11219 exp.06/30/2025 ELECTRICAL STATE OF CALIFORNIA

05-13-2024

6LB	7LA
8LA	---

Stantec
801 S. Figueroa Street, Suite 300
Los Angeles, CA 90017

Copyright Reserved
The contractor shall verify and be responsible for all dimensions. DO NOT scale the drawing - any errors or omissions shall be reported to Stantec without delay.
This drawing is the property of Stantec and shall not be reproduced in whole or in part. Reproduction or use for any purpose other than that authorized by Stantec is prohibited.

REVISION	DESCRIPTION	DATE
4	100% RESUBMITTAL	05/13/2024
3	100% CONSTRUCTION DRAWING SUBMITTAL	03/27/2024
2	90% UPDATED CONSTRUCTION SUBMITTAL	02/13/2024
1	90% CONSTRUCTION DRAWING SUBMITTAL	12/07/2023

REPLACEMENT OF MECHANICAL UNITS AT SANTA ANA BUS BASE
4301 W. MAC ARTHUR BLVD., SANTA ANA, CA

PANEL SCHEDULES

JOB #:
DESIGN BY: IZ
DRAWN BY: AD
CHECKED BY: PKE
DATE: 02/13/2024
SCALE: NTS
SHEET: **E-704D**

OCTA
ORANGE COUNTY TRANSPORTATION AUTHORITY
550 SOUTH MAIN STREET, ORANGE, CA

Autodesk Docs://2014233703_Santa_Ana_Bus/elec_SantaAnaBus_2014233703.rvt
5/8/2024 9:59:52 AM

EQUIP TAG	DESCRIPTION	LOCATION	SERVICE	MOTOR POWER (OR) HP	ELECTRICAL DATA VOLTS	ø	HZ	FLA(A)	MCA(A)	MOCP(A)	DISCONNECT FRAME(A)	FUSE SIZE (A)	BY	STARTER TYPE	BY	EMERGENCY / NORMAL	CONDUIT REF #	CONDUIT	WIRE	PANEL	CIRCUIT	REMARK
ROOF TOP UNIT, 65 kAIC RATED																						
RTU 4-1	PACKAGED ROOFTOP UNIT	OPERATIONS BUILDING	OPER. BLDG	17.4 kW	480	3	60	-	41	50	60	50	DIV.26	N/A	N/A	NORMAL	19	1"	3#6 & 1#8G	DB4	4	POWER WIRING AND DISCONNECT BY EC
																						120V CIRCUIT FOR IONIZATION SYSTEM
RTU 4-2	PACKAGED ROOFTOP UNIT	OPERATIONS BUILDING	OPER. BLDG	7.1 kW	480	3	60	-	18	20	30	20	DIV.26	N/A	N/A	NORMAL	20	3/4"	3#12 & 1#12G	DB4	5	POWER WIRING AND DISCONNECT BY EC
																						120V CIRCUIT FOR IONIZATION SYSTEM
RTU 4-3	PACKAGED ROOFTOP UNIT	OPERTIONS BUILDING	OPER. BLDG	11.8 kW	480	3	60	-	29	40	60	40	DIV.26	N/A	N/A	NORMAL	21	3/4"	3#8 & 1#10G	DB4	6	POWER WIRING AND DISCONNECT BY EC
																						120V CIRCUIT FOR IONIZATION SYSTEM
RTU 4-4	PACKAGED ROOFTOP UNIT	OPERATIONS BUILDING	OPER. BLDG	10.5 kW	480	3	60	-	25	30	30	30	DIV.26	N/A	N/A	NORMAL	22	3/4"	3#10 & 1#10G	DB4	7	POWER WIRING AND DISCONNECT BY EC
																						120V CIRCUIT FOR IONIZATION SYSTEM
RTU 5-1	PACKAGED ROOFTOP UNIT	MAINTENANCE BUILDING	2ND FLR OFFICES	19.7 kW	480	3	60	-	49	60	60	50	DIV.26	N/A	N/A	NORMAL	106	1"	3#6 & 1#8G	5HP	1	POWER WIRING AND DISCONNECT BY EC
																						120V CIRCUIT FOR IONIZATION SYSTEM
RTU 5-2	PACKAGED ROOFTOP UNIT	MAINTENANCE BUILDING	BREAK ROOM	17.6 kW	480	3	60	-	41	50	60	50	DIV.26	N/A	N/A	NORMAL	107	1"	3#6 & 1#8G	5HP	2	POWER WIRING AND DISCONNECT BY EC
																						120V CIRCUIT FOR IONIZATION SYSTEM
RTU 5-3	PACKAGED ROOFTOP UNIT	MAINTENANCE BUILDING	REVENUE OFFICES	17.6 kW	480	3	60	-	41	50	60	50	DIV.26	N/A	N/A	NORMAL	108	1-1/4"	3#4 & 1#8G	5HP	3	POWER WIRING AND DISCONNECT BY EC
																						120V CIRCUIT FOR IONIZATION SYSTEM
RTU 5-4	PACKAGED AIR...	MAINTENANCE BUILDING	OFFICE	1.8 kW	208	1	60	-	20.6	30	30	30	DIV.26	N/A	N/A	NORMAL	-	3/4"	2#10 & 1#10G	5LM	31,33	POWER WIRING AND DISCONNECT BY EC
																						120V CIRCUIT FOR IONIZATION SYSTEM
RTU 5-5	PACKAGED AIR...	MAINTENANCE BUILDING	OFFICE	1.8 kW	208	1	60	-	20.6	30	30	30	DIV.26	N/A	N/A	NORMAL	-	3/4"	2#10 & 1#10G	5LM	35,37	POWER WIRING AND DISCONNECT BY EC
																						120V CIRCUIT FOR IONIZATION SYSTEM
RTU 6-1	PACKAGED AIR...	FUEL/BRAKE/TIRE REPAIR...	FUEL BLDG	4.1 kW	208	1	60	-	31.9	50	60	50	DIV.26	N/A	N/A	NORMAL	-	3/4"	2#10 & 1#10G	6LB	2,4	POWER WIRING AND DISCONNECT BY EC
																						120V CIRCUIT FOR IONIZATION SYSTEM
HEATING PUMP, 65 kAIC RATED																						
HP 5-1	HEAT PUMP	MAINTENANCE BUILDING	BLDG OFFICE		208	1	60	-	20.6	30	30	30	DIV.26	N/A	N/A	NORMAL	-	3/4"	2#10 & 1#10G	5LG	22.24	POWER WIRING AND DISCONNECT BY EC
																						120V CIRCUIT FOR IONIZATION SYSTEM
HP 6-1	HEAT PUMP	FUEL/BRAKE/TIRE REPAIR...	CONTROL		208	1	60	-	20.6	30	30	30	DIV.26	N/A	N/A	NORMAL	-	3/4"	2#10 & 1#10G	LB	6,8	POWER WIRING AND DISCONNECT BY EC
																						120V CIRCUIT FOR IONIZATION SYSTEM
AIR CONDITIONING UNIT, 65 kAIC RATED																						
AC 4-1	PACKAGED COOLING UNIT	OPERATIONS BUILDING	COMPUTER ROOM	3.4kW	208	1	60	-	16.7	25	30	25	DIV.26	N/A	N/A	NORMAL	-	3/4"	2#10 & 1#10G	4LC	30,32	POWER WIRING AND DISCONNECT BY EC
																						120V CIRCUIT FOR LIGHT AND RECEPTACLE
AC 4-2	PACKAGED COOLING UNIT	OPERATIONS BUILDING	TELECOM ROOM	3.4kW	208	1	60	-	16.7	25	30	25	DIV.26	N/A	N/A	NORMAL	-	3/4"	2#10 & 1#10G	4LC	34,36	POWER WIRING AND DISCONNECT BY EC
																						120V CIRCUIT FOR LIGHT AND RECEPTACLE
AC 5-1	PACKAGED COOLING UNIT	MAINTENANCE BUILDING	COMM ROOM	3.4kW	208	1	60	-	16.7	25	30	25	DIV.26	N/A	N/A	NORMAL	-	3/4"	2#10 & 1#10G	5LJ	34,36	POWER WIRING AND DISCONNECT BY EC
																						120V CIRCUIT FOR LIGHT AND RECEPTACLE
AC 5-2	PACKAGED COOLING UNIT	MAINTENANCE BUILDING	LAN ROOM	3.4kW	208	1	60	-	16.7	25	30	25	DIV.26	N/A	N/A	NORMAL	-	3/4"	2#10 & 1#10G	5LQ	37,39	POWER WIRING AND DISCONNECT BY EC
																						120V CIRCUIT FOR LIGHT AND RECEPTACLE
AC 6-1	PACKAGED COOLING UNIT	FUEL/BRAKE/TIRE REPAIR...	COMM	3.4kW	208	1	60	-	16.7	25	30	25	DIV.26	N/A	N/A	NORMAL	-	3/4"	2#10 & 1#10G	6LB	38,40	POWER WIRING AND DISCONNECT BY EC
																						120V CIRCUIT FOR LIGHT AND RECEPTACLE
MAKEUP AIR UNITS																						
MAU 5-1	MAKEUP AIR UNIT	MAINTENANCE BUILDING	OPER. BLDG	20	480	3	60	28.1	35	50	60	50	DIV.26	N/A	N/A	NORMAL	-	3/4"	3#10 & 1#10G	5HP	4	POWER WIRING AND DISCONNECT BY EC
MAU 5-2	MAKEUP AIR UNIT	MAINTENANCE BUILDING	OPER. BLDG	15	480	3	60	22.1	27.6	40	60	40	DIV.26	N/A	N/A	NORMAL	110	3/4"	3#10 & 1#10G	5HP	5	POWER WIRING AND DISCONNECT BY EC
MAU 5-3	MAKEUP AIR UNIT	MAINTENANCE BUILDING	OPER. BLDG	15	480	3	60	22.1	27.6	40	60	40	DIV.26	N/A	N/A	NORMAL	111	3/4"	3#10 & 1#10G	5HP	6	POWER WIRING AND DISCONNECT BY EC
MAU 5-4	MAKEUP AIR UNIT	MAINTENANCE BUILDING	OPER. BLDG	15	480	3	60	22.1	27.6	40	60	40	DIV.26	N/A	N/A	NORMAL	112	3/4"	3#10 & 1#10G	5HP	7	POWER WIRING AND DISCONNECT BY EC
MAU 5-5	MAKEUP AIR UNIT	MAINTENANCE BUILDING	2ND FLR OFFICES	15	480	3	60	22.1	27.6	40	60	40	DIV.26	N/A	N/A	NORMAL	113	3/4"	3#10 & 1#10G	5HP	8	POWER WIRING AND DISCONNECT BY EC
MAU 5-6	MAKEUP AIR UNIT	MAINTENANCE BUILDING	BREAK ROOM	15	480	3	60	22.1	27.6	40	60	40	DIV.26	N/A	N/A	NORMAL	114	1"	3#10 & 1#10G	5HP	9	POWER WIRING AND DISCONNECT BY EC
MAU 5-7	MAKEUP AIR UNIT	MAINTENANCE BUILDING	REVENUE OFFICES	7 1/2	480	3	60	12.1	15.1	20	30	20	DIV.26	N/A	N/A	NORMAL	115	3/4"	3#12 & 1#12G	5HP	10	POWER WIRING AND DISCONNECT BY EC
MAU 5-8	MAKEUP AIR UNIT	MAINTENANCE BUILDING	OFFICE	3	480	3	60	5.9	7.4	15	30	15	DIV.26	N/A	N/A	NORMAL	140	3/4"	3#12 & 1#12G	5HP	11	POWER WIRING AND DISCONNECT BY EC
MAU 5-9 (E)	MAKEUP AIR UNIT	MAINTENANCE BUILDING	PAINT BOOTH	-	480	3	60	-	-	-	-	-	DIV.26	N/A	N/A	NORMAL	-	-	-	5HJ	19	EXISTING TO REMAIN

REGISTERED PROFESSIONAL ENGINEER
PAUL K. ERIKSON
No. 11219
exp.06/30/2025
ELECTRICAL
STATE OF CALIFORNIA

05-13-2024

IFB 4-2550 EXHIBIT B

Stantec
801 S. Figueroa Street, Suite 300
Los Angeles, CA 90017

Copyright Reserved
The contractor shall verify and be responsible for all dimensions. DO NOT scale the drawing - any errors or omissions shall be reported to Stantec without delay.
This drawing is the property of Stantec and shall not be reproduced in whole or in part. Reproduction or use for any purpose other than that authorized by Stantec is prohibited.

REVISION	DESCRIPTION	DATE
4	100% RESUBMITTAL	05/13/2024
3	100% CONSTRUCTION DRAWING SUBMITTAL	03/27/2024
2	90% UPDATED CONSTRUCTION SUBMITTAL	02/13/2024
1	90% CONSTRUCTION DRAWING SUBMITTAL	12/07/2023

REPLACEMENT OF MECHANICAL UNITS AT SANTA ANA BUS BASE

4301 W. MAC ARTHUR BLVD., SANTA ANA, CA

CONDUIT SCHEDULES

JOB #:
DESIGN BY: IZ
DRAWN BY: AD
CHECKED BY: PKE
DATE: 02/13/2024
SCALE:
SHEET: **E-800D**

OCTA
ORANGE COUNTY TRANSPORTATION AUTHORITY
550 SOUTH MAIN STREET, ORANGE, CA

Autodesk Docs://2014233703_Santa_Ana_Bus/elec_SantaAnaBus_2014233703.rvt

5/8/2024 9:59:52 AM

EQUIP TAG	DESCRIPTION	LOCATION	SERVICE	MOTOR POWER (OR) HP	ELECTRICAL DATA VOLTS	ø	HZ	FLA(A)	MCA(A)	MOCP(A)	DISCONNECT FRAME(A)	FUSE SIZE (A)	BY	STARTER TYPE	BY	EMERGENCY / NORMAL	CONDUIT REF #	CONDUIT	WIRE	PANEL	CIRCUIT	REMARK
EF 4-1	EXHAUST FAN	OPERATIONS BUILDING	OPER BLDG REST RM	1/4	120	1	60	2.9	4	15	-	-	DIV.26	N/A	N/A	NORMAL	-	3/4"	2#10 & 1#10G	4LC	2	MOTOR RATED SWITCH
EF 4-2	EXHAUST FAN	OPERATIONS BUILDING	OPER BLD MEN'S RM	1/4	120	1	60	3.5	4	15	-	-	DIV.26	N/A	N/A	NORMAL	-	3/4"	2#10 & 1#10G	4LC	4	MOTOR RATED SWITCH
EF 4-3	EXHAUST FAN	OPERATIONS BUILDING	OPER BLD ELEC RM 103	1/4	120	1	60	3.5	4	15	-	-	DIV.26	N/A	N/A	NORMAL	-	3/4"	2#10 & 1#10G	4LC	6	MOTOR RATED SWITCH
EF 4-4	EXHAUST FAN	OPERATIONS BUILDING	OPER BLDG LOCKER	1/10	120	1	60	1.5	2	15	-	-	DIV.26	N/A	N/A	NORMAL	-	3/4"	2#10 & 1#10G	4LC	8	MOTOR RATED SWITCH
EF 5-1	EXHAUST FAN	MAINTENANCE BUILDING	RUNNING REPAIR RM 181	25	480	3	60	34	42.5	70	100	70	DIV.26	2	DIV.23	NORMAL	141	1-1/4"	6#8 & 1#10G	MCC5A	2	POWER WIRING AND DISCONNECT BY EC
EF 5-2	EXHAUST FAN	MAINTENANCE BUILDING	RM 181	15	480	3	60	21	26.2	45	60	45	DIV.26	2	DIV.23	NORMAL	142	1"	6#10 & 1#10G	MCC5A	3	POWER WIRING AND DISCONNECT BY EC
EF 5-3	EXHAUST FAN	MAINTENANCE BUILDING	RM 178	15	480	3	60	21	26.2	45	60	45	DIV.26	2	DIV.23	NORMAL	143	1"	6#10 & 1#10G	MCC5A	4	POWER WIRING AND DISCONNECT BY EC
EF 5-4	EXHAUST FAN	MAINTENANCE BUILDING	RM 178	15	480	3	60	21	26.2	45	60	45	DIV.26	2	DIV.23	NORMAL	144	1"	6#10 & 1#10G	MCC5A	5	POWER WIRING AND DISCONNECT BY EC
EF 5-5	EXHAUST FAN	MAINTENANCE BUILDING	RM 178	15	480	3	60	21	26.2	45	60	45	DIV.26	2	DIV.23	NORMAL	145	1"	6#10 & 1#10G	MCC5A	6	POWER WIRING AND DISCONNECT BY EC
EF 5-6	EXHAUST FAN	MAINTENANCE BUILDING	STEAM CLEANER	5	480	3	60	7.6	9.5	15	30	15	DIV.26	1	DIV.23	NORMAL	146	3/4"	6#12 & 1#12G	MCC5A	7	POWER WIRING AND DISCONNECT BY EC
EF 5-7	EXHAUST FAN	MAINTENANCE BUILDING	PARTS RM 135	2	480	3	60	3.4	4.25	15	30	15	DIV.26	1	DIV.23	NORMAL	126	3/4"	3#12 & 1#12G	MCC5	26	POWER WIRING AND DISCONNECT BY EC
EF 5-8	EXHAUST FAN	MAINTENANCE BUILDING	PARTS RM 135	2	480	3	60	3.4	4.25	15	30	15	DIV.26	1	DIV.23	NORMAL	127	3/4"	3#12 & 1#12G	MCC5	27	POWER WIRING AND DISCONNECT BY EC
EF 5-9	EXHAUST FAN	MAINTENANCE BUILDING	PARTS RM 135	2	480	3	60	3.4	4.25	15	30	15	DIV.26	1	DIV.23	NORMAL	128	3/4"	3#12 & 1#12G	MCC5	28	POWER WIRING AND DISCONNECT BY EC
EF 5-10	EXHAUST FAN	MAINTENANCE BUILDING	PARTS RM 135	2	480	3	60	3.4	4.25	15	30	15	DIV.26	1	DIV.23	NORMAL	129	3/4"	3#12 & 1#12G	MCC5	29	POWER WIRING AND DISCONNECT BY EC
EF 5-11	EXHAUST FAN	MAINTENANCE BUILDING	JAN RM 219	1/15	120	1	60	1.3	2.00	15	-	-	DIV.26	N/A	N/A	NORMAL	-	3/4"	2#12 & 1#12G	5LP	32	MOTOR RATED SWITCH
EF 5-12 (E)	EXHAUST FAN	MAINTENANCE BUILDING	MEN'S RM 214, WOMEN 213	(E)	120	1	60	-	-	-	-	-	DIV.26	N/A	N/A	NORMAL	-	3/4"	2#12 & 1#12G	5LP	34	EXISTING TO REMAIN
EF 5-13	EXHAUST FAN	MAINTENANCE BUILDING	MEN'S RM 109	1/4	120	1	60	3.5	4	15	-	-	DIV.26	N/A	N/A	NORMAL	-	3/4"	2#12 & 1#12G	5LP	36	MOTOR RATED SWITCH
EF 5-14 (E)	EXHAUST FAN	MAINTENANCE BUILDING	WOMEN/SH RM 115	(E)	120	1	60	-	-	-	-	-	DIV.26	N/A	N/A	NORMAL	-	3/4"	2#12 & 1#12G	5LP	38	EXISTING TO REMAIN
EF 5-15 (E)	EXHAUST FAN	MAINTENANCE BUILDING	JAN RM 114	(E)	120	1	60	-	-	-	-	-	DIV.26	N/A	N/A	NORMAL	-	-	-	5LP	40	EXISTING TO REMAIN
EF 5-16	EXHAUST FAN	MAINTENANCE BUILDING	REBUILT RM 106	2	480	3	60	3.4	4.25	15	30	15	DIV.26	N/A	N/A	NORMAL	130	3/4"	3#12 & 1#12G	MCC5	30	POWER WIRING AND DISCONNECT BY EC
EF 5-17	EXHAUST FAN	MAINTENANCE BUILDING	REBUILT RM 107	2	480	3	60	3.4	4.25	15	30	15	DIV.26	1	DIV.23	NORMAL	131	3/4"	3#12 & 1#12G	MCC5	31	POWER WIRING AND DISCONNECT BY EC
EF 5-18	EXHAUST FAN	MAINTENANCE BUILDING	REBUILT RM 108	2	480	3	60	3.4	4.25	15	30	15	DIV.26	1	DIV.23	NORMAL	132	3/4"	3#12 & 1#12G	MCC5	32	POWER WIRING AND DISCONNECT BY EC
EF 5-19	EXHAUST FAN	MAINTENANCE BUILDING	BREAK RM 121	1 1/2	480	3	60	3	3.75	15	30	15	DIV.26	1	DIV.23	NORMAL	133	3/4"	3#12 & 1#12G	MCC5	33	POWER WIRING AND DISCONNECT BY EC
EF 5-20	EXHAUST FAN	MAINTENANCE BUILDING	CLEAN SHOP 141	1	480	3	60	2.1	2.63	15	30	15	DIV.26	1	DIV.23	NORMAL	134	3/4"	3#12 & 1#12G	MCC5	34	POWER WIRING AND DISCONNECT BY EC
EF 5-21	EXHAUST FAN	MAINTENANCE BUILDING	MACHINE RM 144	1	480	3	60	2.1	2.63	15	30	15	DIV.26	1	DIV.23	NORMAL	135	3/4"	3#12 & 1#12G	MCC5	35	POWER WIRING AND DISCONNECT BY EC
EF 5-22	EXHAUST FAN	MAINTENANCE BUILDING	MACHINE RM 145	1	480	3	60	2.1	2.63	15	30	15	DIV.26	1	DIV.23	NORMAL	136	3/4"	3#12 & 1#12G	MCC5	36	POWER WIRING AND DISCONNECT BY EC
EF 5-23 (E)	EXHAUST FAN	MAINTENANCE BUILDING	COMP REP RM 143	(E)	480	3	60	-	-	-	-	-	DIV.26	-	-	NORMAL	-	-	-	5LM	39	EXISTING TO REMAIN
EF 5-24	EXHAUST FAN	MAINTENANCE BUILDING	BLDG MAIN. RM 150	3/4	480	3	60	1.6	2	15	30	15	DIV.26	1	DIV.23	NORMAL	137	3/4"	3#12 & 1#12G	MCC5	37	POWER WIRING AND DISCONNECT BY EC
EF 5-25	EXHAUST FAN	MAINTENANCE BUILDING	COMP EXCH RM 148	7 1/2	480	3	60	11	13.8	20	30	20	DIV.26	1	DIV.23	NORMAL	147	3/4"	6#12 & 1#12G	MCC5A	8	POWER WIRING AND DISCONNECT BY EC
EF 5-26	EXHAUST FAN	MAINTENANCE BUILDING	REV. TOIL. RM 160/161	1/10	120	1	60	1.5	2	15	-	-	DIV.26	N/A	N/A	NORMAL	-	3/4"	2#12 & 1#12G	5LS	2	MOTOR RATED SWITCH
EF 5-27 (E)	EXHAUST FAN	MAINTENANCE BUILDING	LOCKER RM 167	(E)	120	1	60	-	-	-	-	-	DIV.26	-	-	NORMAL	-	-	-	5LS	4	EXISTING TO REMAIN
EF 5-28	EXHAUST FAN	MAINTENANCE BUILDING	BODY SHOP RM 174	20	480	3	60	27	33.8	60	60	50	DIV.26	2	DIV.23	NORMAL	148	1"	6#10 & 1#10G	MCC5A	9	POWER WIRING AND DISCONNECT BY EC
EF 5-29	EXHAUST FAN	MAINTENANCE BUILDING	STORAGE RM 155	3/4	480	3	60	1.6	2	15	30	15	DIV.26	1	DIV.23	NORMAL	138	3/4"	3#12 & 1#12G	MCC5	38	POWER WIRING AND DISCONNECT BY EC
EF 5-30 (E)	EXHAUST FAN	MAINTENANCE BUILDING	TEL RM 136	(E)	120	1	60	-	-	-	-	-	DIV.26	-	-	NORMAL	-	-	-	5LH	24	EXISTING TO REMAIN
EF 5-31	EXHAUST FAN	MAINTENANCE BUILDING	ELEC RM 137	2	480	3	60	3.2	4	15	30	15	DIV.26	N/A	N/A	NORMAL	-	3/4"	3#12 & 1#12G	5HE	20	POWER WIRING AND DISCONNECT BY EC
EF 5-32	EXHAUST FAN	MAINTENANCE BUILDING	LUBE RM 138	1/10	120	1	60	1.5	2	15	-	-	DIV.26	N/A	N/A	NORMAL	-	3/4"	2#10 & 1#10G	5LH	24	MOTOR RATED SWITCH
EF 5-33	EXHAUST FAN	MAINTENANCE BUILDING	C.A. RM 139	3	480	3	60	4.8	6	15	30	15	DIV.26	N/A	N/A	NORMAL	-	3/4"	3#12 & 1#12G	5HE	20	POWER WIRING AND DISCONNECT BY EC
EF 5-34	EXHAUST FAN	MAINTENANCE BUILDING	ELEC RM 185	2	480	3	60	3.2	4	15	30	15	DIV.26	N/A	N/A	NORMAL	-	3/4"	3#12 & 1#12G	5HA	28	POWER WIRING AND DISCONNECT BY EC
EF 5-35	EXHAUST FAN	MAINTENANCE BUILDING	ELEC RM 184	1/2	120	1	60	6.4	8	15	-	-	DIV.26	N/A	N/A	NORMAL	128	3/4"	3#12 & 1#12G	5LA	6	MOTOR RATED SWITCH
EF 5-36 (E)	EXHAUST FAN	MAINTENANCE BUILDING	ELEC RM 220	(E)	480	3	60	-	-	-	-	-	DIV.26	-	-	NORMAL	-	-	-	MCC5	10	EXISTING TO REMAIN
EF 5-37	EXHAUST FAN	MAINTENANCE BUILDING	ENG. DYN. RM 103	7 1/2	480	3	60	11	13.8	20	30	20	DIV.26	1	DIV.23	NORMAL	-	3/4"	3#12 & 1#12G	MCC5A	11	POWER WIRING AND DISCONNECT BY EC
EF 5-38	EXHAUST FAN	MAINTENANCE BUILDING	TRAN DYN. RM 105	1/4	120	1	60	3.5	4	15	-	-	DIV.26	N/A	N/A	NORMAL	-	3/4"	2#12 & 1#12G	5LN	10	MOTOR RATED SWITCH
EF 5-39	EXHAUST FAN	MAINTENANCE BUILDING	EQUIP. STOR. RM 129	1/6	120	1	60	2.3	3	15	-	-	DIV.26	N/A	N/A	NORMAL	-	3/4"	2#12 & 1#12G	5LD	6	MOTOR RATED SWITCH
EF 5-40	EXHAUST FAN	MAINTENANCE BUILDING	LOADING ABY RM 170	1/4	120	1	60	3.5	4	15	-	-	DIV.26	N/A	N/A	NORMAL	-	3/4"	2#12 & 1#12G	5LK	3	MOTOR RATED SWITCH
EF 5-41	EXHAUST FAN	MAINTENANCE BUILDING	UPHOLSTERY SHOP RM...	1/4	120	1	60	3.5	4	15	-	-	DIV.26	N/A	N/A	NORMAL	-	3/4"	2#12 & 1#12G	5LS	6	MOTOR RATED SWITCH
EF 5-42	EXHAUST FAN	MAINTENANCE BUILDING	FUEL RM 102	1/4	120	1	60		7.25	15	-	-	DIV.26	N/A	N/A	NORMAL	-	3/4"	2#12 & 1#12G	5LT	13	MOTOR RATED SWITCH
EF 5-43 (E)	EXHAUST FAN	MAINTENANCE BUILDING	PAINT BOOTH	(E)	-	-	-	-	-	-	-	-	DIV.26	-	-	NORMAL	-	-	-	5HJ	19	EXISTING TO REMAIN
EF 6-1	EXHAUST FAN	FUEL/BRAKE/TIRE REPAIR...	BRAKE/BST RM 114/001	20	480	3	60	27	33.8	50	60	50	DIV.26	2	DIV.23	NORMAL	171	1"	6#10 & 1#10G	MCC6	2	POWER WIRING AND DISCONNECT BY EC
EF 6-2	EXHAUST FAN	FUEL/BRAKE/TIRE REPAIR...	FUEL AREA RM 115	15	480	3	60	21	26.2	40	60	40	DIV.26	2	DIV.23	NORMAL	172	1"	6#10 & 1#10G	MCC6	3	POWER WIRING AND DISCONNECT BY EC
EF 6-3	EXHAUST FAN	FUEL/BRAKE/TIRE REPAIR...	BODY/SHOP 118/116	10	480	3	60	14	17.5	30	30	30	DIV.26	1	DIV.23	NORMAL	173	3/4"	6#12 & 1#12G	MCC6	4	POWER WIRING AND DISCONNECT BY EC
EF 6-4	EXHAUST FAN	FUEL/BRAKE/TIRE REPAIR...	MEN'S RM	1/15	120	1	60	1.3	2	15	-	-	DIV.26	N/A	N/A	NORMAL	-	3/4"	2#12 & 1#12G	6LB	1	MOTOR RATED SWITCH
EF 6-5 (E)	EXHAUST FAN	FUEL/BRAKE/TIRE REPAIR...	WOMEN'S RM	(E)	120	1	60	-	-	-	-	-	DIV.26	-	-	NORMAL	-	-	-	6LB	3	EXISTING TO REMAIN
EF 6-6	EXHAUST FAN	FUEL/BRAKE/TIRE REPAIR...	LOCKER/LAUNDRY	1/10	120	1	60	1.5	2	15	-	-	DIV.26	N/A	N/A	NORMAL	-	3/4"	2#12 & 1#12G	6LB	5	MOTOR RATED SWITCH
EF 6-7	EXHAUST FAN	FUEL/BRAKE/TIRE REPAIR...	C.A. 111/TEL. 112	3	480	3	60	4.8	6	15	30	15	DIV.26	N/A	N/A	NORMAL	-	3/4"	3#12 & 1#12G	MCC5	9	POWER WIRING AND DISCONNECT BY EC
EF 6-8	EXHAUST FAN	FUEL/BRAKE/TIRE REPAIR BUILDING	FLUID TANK 110/GREESE TANK 109	1/10	120	1	60	1.5	2	15	-	-	DIV.26	N/A	N/A	NORMAL	-	3/4"	2#12 & 1#12G	6LB	9	MOTOR RATED SWITCH
EF 6-9	EXHAUST FAN	FUEL/BRAKE/TIRE REPAIR...	FUEL RM 115	1/2	120	1	60	6.4	8	15	-	-	DIV.26	N/A	N/A	NORMAL	-	3/4"	2#12 & 1#12G	6LB	42	MOTOR RATED SWITCH
EF 7-1	EXHAUST FAN	BUS WASH/BRAKE DYNO BUILDING	BUS WASH	2	480	3	60	3.4	4.25	15	30	15	DIV.26	N/A	N/A	NORMAL	174	3/4"	3#12 & 1#12G	MCC6	5	POWER WIRING AND DISCONNECT BY EC
EF 7-2	EXHAUST FAN	BUS WASH/BRAKE DYNO BUILDING	BUS WASH	2	480	3	60	3.4	4.25	15	30	15	DIV.26	N/A	N/A	NORMAL	174	3/4"	3#12 & 1#12G	MCC6	5	POWER WIRING AND DISCONNECT BY EC
EF 8-1	EXHAUST FAN	DETAIL/CLEANING BUILDING	DETAILING/CLEANIN EQUIP. RM	1/4	120	1	60	2.9	4	15	-	-	DIV.26	N/A	N/A	NORMAL	-	3/4"	2#12 & 1#12G	8LA	24	MOTOR RATED SWITCH

IFB 4-2550 EXHIBIT B

Stantec
801 S. Figueroa Street, Suite 300
Los Angeles, CA 90017

Copyright Reserved
The contractor shall verify and be responsible for all dimensions. DO NOT scale the drawing - any errors or omissions shall be reported to Stantec without delay.
The copyrights to all designs and drawings are the property of Stantec. Reproduction or use for any purpose other than that authorized by Stantec is prohibited.

REVISION	DESCRIPTION	DATE
4	100% RESUBMITTAL	05/13/2024
3	100% CONSTRUCTION DRAWING SUBMITTAL	03/27/2024
2	90% UPDATED CONSTRUCTION SUBMITTAL	02/13/2024
1	90% CONSTRUCTION DRAWING SUBMITTAL	12/07/2023

REGISTERED PROFESSIONAL ENGINEER
PAUL K. ERICSSON
No. 11219
exp.06/30/2025
ELECTRICAL
STATE OF CALIFORNIA

05-13-2024

REPLACEMENT OF MECHANICAL UNITS AT SANTA ANA BUS BASE
4301 W. MAC ARTHUR BLVD., SANTA ANA, CA

CONDUIT SCHEDULES

JOB #:
DESIGN BY: IZ
DRAWN BY: ERL
CHECKED BY: PKE
DATE: 02/13/2024
SCALE:
SHEET: **E-801D**

OCTA
ORANGE COUNTY TRANSPORTATION AUTHORITY
550 SOUTH MAIN STREET, ORANGE, CA

Autodesk Docs://2014233703_Santa_Ana_Bus/elec_SantaAnaBus_2014233703.rvt

EQUIP TAG	DESCRIPTION	LOCATION	SERVICE	MOTOR POWER (OR) HP	ELECTRICAL DATA						DISCONNECT			STARTER		EMERGENCY / NORMAL	CONDUIT REF #	CONDUIT	WIRE	PANEL	CIRCUIT	REMARK
					VOLTS	ø	HZ	FLA(A)	MCA(A)	MOCP(A)	FRAME(A)	FUSE SIZE (A)	BY	TYPE	BY							
SF 4-1	SUPPLY FAN	OPERATIONS BUILDING	ELEC RM 103	1/4	120	1	60	5.8	7.25	20	-	-	DIV.26	1	DIV.23	NORMAL	-	3/4"	2#12 & 1#12G	4LC	38	MOTOR RATED SWITCH
SF 5-1	SUPPLY FAN	MAINTENANCE BUILDING	PARTS RM 135	3	480	3	60	4.8	6	15	30	15	DIV.26	1	DIV.23	NORMAL	116	3/4"	3#12 & 1#12G	MCC5	16	POWER WIRING AND DISCONNECT BY EC
SF 5-2	SUPPLY FAN	MAINTENANCE BUILDING	PARTS RM 135	3	480	3	60	4.8	6	15	30	15	DIV.26	1	DIV.23	NORMAL	117	3/4"	3#12 & 1#12G	MCC5	17	POWER WIRING AND DISCONNECT BY EC
SF 5-3	SUPPLY FAN	MAINTENANCE BUILDING	PARTS RM 135	3	480	3	60	4.8	6	15	30	15	DIV.26	1	DIV.23	NORMAL	118	3/4"	3#12 & 1#12G	MCC5	18	POWER WIRING AND DISCONNECT BY EC
SF 5-4	SUPPLY FAN	MAINTENANCE BUILDING	REBUILT RM 106	5	480	3	60	7.6	9.5	15	30	15	DIV.26	1	DIV.23	NORMAL	119	3/4"	3#12 & 1#12G	MCC5	19	POWER WIRING AND DISCONNECT BY EC
SF 5-5	SUPPLY FAN	MAINTENANCE BUILDING	BRAKE RM 121	1.5	480	3	60	3	3.75	15	30	15	DIV.26	1	DIV.23	NORMAL	120	3/4"	3#12 & 1#12G	MCC5	20	POWER WIRING AND DISCONNECT BY EC
SF 5-6	SUPPLY FAN	MAINTENANCE BUILDING	CLEAN SHOP RM 141	1	480	3	60	2.1	2.63	15	30	15	DIV.26	1	DIV.23	NORMAL	121	3/4"	3#12 & 1#12G	MCC5	21	POWER WIRING AND DISCONNECT BY EC
SF 5-7 (E)	SUPPLY FAN	MAINTENANCE BUILDING	MECH SHOP RM 144	(E)	480	3	60	-	-	-	-	-	DIV.26	-	-	NORMAL	122	3/4"	3#12 & 1#12G	MCC5	22	EXISTING TO REMAIN
SF 5-8	SUPPLY FAN	MAINTENANCE BUILDING	COMP. SHOP.RM143	3/4	480	3	60	1.6	2	15	30	15	DIV.26	1	DIV.23	NORMAL	123	3/4"	3#12 & 1#12G	MCC5	23	POWER WIRING AND DISCONNECT BY EC
SF 5-9	SUPPLY FAN	MAINTENANCE BUILDING	BLD MAINT.RM 150	2	480	3	60	3.4	4.25	15	30	15	DIV.26	1	DIV.23	NORMAL	124	3/4"	3#12 & 1#12G	MCC5	24	POWER WIRING AND DISCONNECT BY EC
SF 5-10	SUPPLY FAN	MAINTENANCE BUILDING	STORAGE RM 155	1	480	3	60	2.1	2.63	15	30	15	DIV.26	1	DIV.23	NORMAL	125	3/4"	3#12 & 1#12G	MCC5	25	POWER WIRING AND DISCONNECT BY EC
SF 5-11 (E)	SUPPLY FAN	MAINTENANCE BUILDING	ELEC RM 137	(E)	480	3	60	-	-	-	-	-	DIV.26	-	-	NORMAL	-	-	-	5HE	20	EXISTING TO REMAIN
SF 5-12	SUPPLY FAN	MAINTENANCE BUILDING	ELEC RM 185	1/2	480	3	60	1.1	1.38	15	30	15	DIV.26	1	DIV.23	NORMAL	-	3/4"	3#12 & 1#12G	5HA	28	POWER WIRING AND DISCONNECT BY EC
SF 5-13	SUPPLY FAN	MAINTENANCE BUILDING	ELEC RM 184	1/2	480	3	60	1.1	1.38	15	30	15	DIV.26	1	DIV.23	NORMAL	-	3/4"	3#12 & 1#12G	5HA	28	POWER WIRING AND DISCONNECT BY EC
SF 5-14	SUPPLY FAN	MAINTENANCE BUILDING	ELEC RM 220	1 1/2	480	3	60	3	3.75	15	30	15	DIV.26	1	DIV.23	NORMAL	-	3/4"	3#12 & 1#12G	MCC5	11	POWER WIRING AND DISCONNECT BY EC
SF 5-15	SUPPLY FAN	MAINTENANCE BUILDING	TRAIN DYN. RM105	1/2	480	3	60	1.1	1.38	15	30	15	DIV.26	1	DIV.23	NORMAL	-	3/4"	3#12 & 1#12G	MCC5	8	POWER WIRING AND DISCONNECT BY EC
SF 5-16	SUPPLY FAN	MAINTENANCE BUILDING	LOADING ABY RM 170	1/2	480	3	60	1.1	1.38	15	30	15	DIV.26	1	DIV.23	NORMAL	-	3/4"	3#12 & 1#12G	MCC5	7	POWER WIRING AND DISCONNECT BY EC
SF 6-1	SUPPLY FAN	FUEL/BRAKE/TIRE REPAIR...	TIRE BAY RM 116	5	480	3	60	7.6	9.5	15	30	15	DIV.26	1	DIV.23	NORMAL	170	3/4"	3#12 & 1#12G	MCC6	6	POWER WIRING AND DISCONNECT BY EC
SF 6-2	SUPPLY FAN	FUEL/BRAKE/TIRE REPAIR...	BASEMENT 001	5	480	3	60	3.4	4.25	15	30	15	DIV.26	1	DIV.23	NORMAL	169	3/4"	3#12 & 1#12G	MCC6	7	POWER WIRING AND DISCONNECT BY EC

REGISTERED PROFESSIONAL ENGINEER
PAUL K. ERICSON
No. 11219
exp.06/30/2025
ELECTRICAL
STATE OF CALIFORNIA

05-13-2024

IFB 4-2550 EXHIBIT B

Stantec

801 S. Figueroa Street, Suite 300
Los Angeles, CA 90017

Copyright Reserved
The contractor shall verify and be responsible for all dimensions. DO NOT scale the drawing - any errors or omissions shall be reported to Stantec without delay.
This drawing is the property of Stantec and shall not be reproduced in whole or in part. Reproduction or use for any purpose other than that authorized by Stantec is prohibited.

REVISION	DESCRIPTION	DATE
4	100% RESUBMITTAL	05/13/2024
3	100% CONSTRUCTION DRAWING SUBMITTAL	03/27/2024
2	90% UPDATED CONSTRUCTION SUBMITTAL	02/13/2024
1	90% CONSTRUCTION DRAWING SUBMITTAL	12/07/2023

REPLACEMENT OF MECHANICAL UNITS AT SANTA ANA BUS BASE
4301 W. MAC ARTHUR BLVD., SANTA ANA, CA

CONDUIT SCHEDULES

JOB #:
DESIGN BY: IZ
DRAWN BY: AD
CHECKED BY: PKE
DATE: 02/13/2024
SCALE:
SHEET: **E-802D**

OCTA
ORANGE COUNTY TRANSPORTATION AUTHORITY
550 SOUTH MAIN STREET, ORANGE, CA

Autodesk Docs://2014233703_Santa_Ana_Bus/elec_SantaAnaBus_2014233703.rvt

5/8/2024 9:59:53 AM

SECTION VIII: LEVEL 3 HEALTH, SAFETY AND ENVIRONMENTAL SPECIFICATIONS – EXHIBIT H

~~SECTION~~ X

LEVEL 3 HEALTH, SAFETY AND ENVIRONMENTAL (HSE) SPECIFICATIONS

REQUIRED HSE SUBMITTAL SUMMARY

The contractor shall submit copies of the items listed below for contract scope work on OCTA projects and property. Copies shall be provided prior to contractor's mobilization onto OCTA projects and property. Contractor shall provide compliant written Health, Safety & Environmental (HSE) submittals within 30 days of the contract notice to proceed.

HSE submittals shall comply with the 1988 Drug Free Workplace Act, or the Department of Transportation (DOT), or the Federal Transportation Administration (FTA) requirements (according to OCTA procurement funding guidelines) and comply with the California Code of Regulations (CCR) Title 8 regulatory standards.

Contractor's established written programs/plans shall comply with CCR Title 8 regulatory standards. All HSE related programs/plans submitted to OCTA for acceptance shall be prepared and submitted by a qualified HSE professional who is recognized by an organization of industry standard (i.e., CSP, CIH, CHST, CHMM, etc.) and is experienced in developing compliant written HSE programs. The site safety HSE representative shall participate in the HSE submittal process.

1. Contractor shall provide a copy of Company's Injury Illness Prevention Program in accordance with CCR Title 8, Section 3203.

2. Contractor shall provide a copy of their Company HSE Policy/Procedure Manual, in compliance with CCR Title 8 Standards for awarded scope.

3. Contractor shall provide a copy of their Policy or Substance Abuse Prevention Program.

4. Contractor shall provide a copy of their Hazard Communication Program and SDS Management Program in compliance with CCR Title 8, Section 5194, Hazard Communication Standard.

5. On-Site HSE Representative:
   On Facility Modification Projects, The Contractor shall submit a resume of the designated on-site qualified HSE Representative. The HSE Representative shall possess a current certification from the Board of Certified Safety Professionals (BCSP), plus five (5) years construction or scope agreement HSE experience enforcing HSE compliance on heavy or industrial construction project sites, the last two years of which have been administering HSE in the construction or scope discipline for which the Contractor is contracting with the Authority. The designated HSE Representative shall participate in all HSE related submittals through completion of scope.

   On Capital Programs, The Contractor's on-site qualified HSE Representative shall be a Certified Safety Professional (CSP) with current standing from the Board of Certified Safety Professionals (BCSP) or a Construction Health and Safety Technician (CHST) with current standing from the (BCSP) or a Certified Industrial

Hygienist (CIH) with current standing from the American Board of Industrial Hygiene (ABIH), or an equal professional HSE Certificate of standing from The National Examination Board in Occupational Safety and Health (NEBOSH), that is acceptable to the Authority. The Contractor's on-site HSE Representative(s) shall provide a resume and have a minimum of seven (7) years heavy construction experience in administering HSE programs on heavy construction project sites, the last two years of which have been administering HSE in the construction/scope discipline for which Contractor is contracting with the Authority.

6. A Detailed Site Specific HSE Work Implementation Plan:
   This plan shall be prepared and submitted by a recognized HSE professional experienced in developing compliant written HSE programs. Indicate the methods and procedures, and include the sequence of tasks as listed on the project schedule, include the hazards, tools and equipment, and the safe work practices to mitigate the hazards in a format acceptable OCTA. Specify safety measures in accordance with applicable Cal/OSHA standards, South Coast Air Quality Management District (SCAQMD) rules, National Fire Protection Association (NFPA), National Electric Code (NEC), American National Standards Institute (ANSI) codes and regulations, job hazard analysis, policies, procedures, HSE training requirements and known and potential hazards of Contractor's scope. Plans shall be prepared as specified above, and may require if necessary a professional engineer licensed to practice in the state of California, when so required by the provisions of the California Board for Professional Engineer and Surveyors.

PART I – GENERAL

1.0 GENERAL HEALTH, SAFETY AND ENVIRONMENTAL REQUIREMENTS

A. The Contractor, its subcontractors, suppliers, and employees have the obligation to comply with all Authority health, safety and environmental compliance department (HSEC) requirements of this safety specification, project site requirements, and bus yard safety rules, as well as all federal, state, and local regulations pertaining to scope of work or agreements with the Authority including California Department of Transportation safety requirements and special provisions. Additionally, manufacturer requirements are considered incorporated by reference, as applicable, to this scope of work.

B. Observance of unsafe acts or conditions, serious violation of health and safety standards, non-conformance of Authority HSEC requirements, or disregard for the intent of these safety specifications to protect people and property, by Contractor may be reason for termination of scope or agreements with the Authority, at the sole discretion of the Authority.

C. The Authority HSEC requirements, and references contained within this scope of work shall not be considered all-inclusive as to the hazards that might be encountered. Safe work practices shall be pre-planned and performed, and safe conditions shall be maintained during the course of this work scope.

D. The Contractor shall specifically acknowledge that it has primary responsibility to prevent and correct all health, safety and environmental hazards for which it and its employees, or its subcontractors (and their employees) are responsible. The Contractor shall further acknowledge their expertise in recognition and prevention of hazards in the operations for which they are responsible, that the Authority may not have such expertise, and is relying upon the Contractor for such expertise. The Authority retains the right to notify the Contractor of potential hazards and request the Contractor to evaluate and, as necessary, to eliminate those hazards.

E. The Contractor shall provide all necessary tools, equipment, and related safety protective devices to execute the scope of work in compliance with the Authority's HSEC requirements, CCR Title 8 Standards, and recognized safe work practices.

F. The Contractor shall instruct all its employees, and all associated sub-contractors under contract with the Contractor who works on Authority projects in the following; recognition, identification, and avoidance of unsafe acts and/or conditions applicable to its work.

PART II – SPECIFIC REQUIREMENTS

2.0 While these safety specifications are intended to promote safe work practices, Contractors are reminded of their obligation to comply with all federal (Code of Federal Regulations (CFR) Sections 1926 & 1910 Standards), state (CCR Title 8 Standards), local and municipal safety regulations, and Authority health, safety and environmental requirements applicable to their project scope. Failure to comply with these standards may be cause for termination of scope or agreements with the Authority, at the sole discretion of the Authority.

2.1 REQUIRED DOCUMENTATION / REPORTING REQUIREMENTS

The Contractor at a minimum shall provide the following documents to the Authority's Project Manager. Items A through E below shall be submitted and accepted by the Authority's Project Manager prior to Contractor mobilization. Item F upon each occurrence, and for items G through K, contractor shall verify the following documentation is in place, prior to and during contract scope and make the same available to the Authority upon request within 72 hours.

Contractor's established written programs/plans shall comply with CCR Title 8 regulatory standards. All new programs/plans shall be prepared and submitted by a qualified HSE professional who is recognized by an organization of industry standard (i.e., CSP, CIH, CHST, STS, CHMM, etc.) and is experienced in developing compliant written HSE programs. The site safety HSE representative shall participate in the scope submittal process.

A. A Comprehensive Project Specific Health, Safety, and Environmental (HSE) Work Plan.

   a. The Contractor shall develop a site project plan that may include, but is not limited to: Permits, Evacuation, Emergency Plan, Roles and

Responsibilities, Scope and Construction Activity Details, Constructability Review, Contractor Coordination Process, Safe Work Methods, Hazard Identification & Risk Control, First Aid and Injury Management, Emergency Procedures, Public Protection, Authority and Contractor Site Rules, Incident Reporting and Investigation, Specialized Work or Licensing, Training and Orientation Requirements, Chemical Management, and Subcontractor Management.

b. A Detailed Site Specific HSE Implementation Plan: This plan shall be prepared and submitted by a recognized HSE professional (current BCSP Certification in good standing, i.e., CSP, CHST, OHST) experienced in developing compliant written HSE programs, acceptable to OCTA. Indicate the methods and procedures, and include the sequence of tasks as listed on the project schedule, include the hazards, tools and equipment, and the safe work practices to mitigate the hazards in a format acceptable OCTA. Specify safety measures in accordance with applicable Cal/OSHA standards, SCAQMD rules, NFPA, NEC, ANSI codes and regulations, job hazard analysis, policies, procedures, HSE training requirements and known and potential hazards of Contractor's scope. Plans shall be prepared as specified above, and may require if necessary a professional engineer licensed to practice in the state of California, when so required by the provisions of the California Board for Professional Engineer and Surveyors.

B. Contractor shall provide a copy of their Company HSE Policy/Procedure Manual, in compliance with CCR Title 8 Standards for awarded scope.

C. Contractor shall provide a copy of Company's Injury Illness Prevention Program in accordance with CCR Title 8, Section 3203.

D. Contractor shall provide a copy of their Policy or Substance Abuse Prevention Program that complies with the 1988 Drug Free Workplace Act.

E. Contractor shall provide the resume and qualifications/certifications of assigned project designated Onsite HSE Representative for this scope as identified in section 2.3 of this specification.

F. Accident/Incident investigation report within 24 hours of event (immediate verbal notification to Authority Project Manager, followed by Written Report).

The following required documentation shall be provided to the Authority's Project Manager, upon Authority request, within 72 hours.

G. A copy of Contractor weekly site safety inspection report with status of corrections, upon request, within 72 hours.

H. Contractor shall provide a copy of the Contractors and subcontractors competent person list (submit to Authority Project Manager, upon Authority request, within 72 hours).

I. Contractors and subcontractors training records for qualified equipment operators, electrical worker certification (NFPA 70E), confined space training, HAZWOPER training, and similar personnel safety training certificates as applicable to the agreement scope and as requested by the OCTA Project Manager and/or HSEC department, upon Authority request, within 72 hours and prior to starting or during the scope activity (submit to Project Manager).

J. A monthly report that includes number of workers on project, a list of subcontractors, work hours (month, year to date, & project cumulative) of each contractor, labor designation, OSHA Recordable injuries and illnesses segregated by medical treatment cases, restricted workday cases, number of restricted days, lost workday cases, and number of lost work days, and recordable incident rate. Contractor shall provide to the Authority, upon request, within 72 hours.

K. TRAINING DOCUMENTATION

To ensure that each employee is qualified to perform their assigned work, when applicable to scope work, Contractor shall verify training documentation is in place, prior to and during contract scope, and make available to the Authority, upon request, within 72 hours. Training may be required by the Authority or CCR Title 8 Standards and required for activity on Authority's property and/or Authority projects. Contractor shall provide to Authority, upon request, within 72 hours.

2.2 HAZARD COMMUNICATION (CCR Title 8, Section 5194)

A. Contractor shall comply with CCR Title 8, Section 5194 Hazard Communication Standard. Prior to chemical use on Authority property and/or project work areas the Contractor shall provide to the Authority Project Manager copies of Safety Data Sheet (SDS) for all applicable products used, if any.

B. All chemicals including paint, solvents, detergents and similar substances shall comply with SCAQMD Rules 103, 1113, and 1171.

2.3 DESIGNATED HEALTH, SAFETY, ENVIRONMENTAL (HSE) REPRESENTATIVE

A. Before beginning on-site activities, the Contractor shall designate an On-site HSE Representative. This person shall be a Competent or Qualified Individual as defined by the Occupational, Safety, and Health Administration (OSHA), familiar with applicable CCR Title 8 Standards, and has the authority to affect changes in work procedures that may have associated cost, schedule and budget impacts.

B. The Contractor's on-site qualified HSE Representative for all Authority projects is subject to acceptance by the Authority Project Manager and the HSEC Department Manager. All contact information of the On-site HSE Representative (name, phone, and fax and pager/cell phone number) shall be provided to the Authority Project Manager.

QUALIFICATIONS – On Capital Programs, the Contractor shall submit a resume of the full time, on-site qualified HSE Representative(s) who reports directly to the Contractor's Project Manager or Superintendent, and who is responsible for HSE oversight for field operations on the project no later than ten (10) days after receipt of Notice to Proceed, and prior to mobilization. The Contractor's On-site HSE Representative(s) shall have a minimum of seven (7) years heavy construction experience in administering HSE programs on heavy construction project sites, the last two years of which have been administering HSE in the construction discipline for which Contractor is contracting with the Authority. The Contractor's On-site HSE Representative shall be a Certified Safety Professional (CSP) with current standing from the Board of Certified Safety Professionals (BCSP), or a Construction Health and Safety Technician (CHST) with current standing from the BCSP or a Certified Industrial Hygienist (CIH) with current standing from the American Board of Industrial Hygiene (ABIH), or an equal professional HSE Certificate of standing from The National Examination Board in Occupational Safety and Health (NEBOSH), that is acceptable to the Authority. The Contractor's On-site HSE Representatives(s) shall be on site during all operational hours. The On-site HSE Representative(s) shall set up, carry forward and aggressively and effectively maintain the project specific safety program and IIPP covering all phases of the work. If at any time the Contractor wishes to replace their On-site HSE Representative(s), the Contractor must provide written notice thirty (30) days prior to change of personnel to the Authority. The Contractor shall take all precautions and follow all procedures for the safety of, and shall provide all protection to prevent injury to, all persons involved in any way in the scope work and all other persons, including, without limitation, the employees, agents, guests, visitors, invitees and licensees of the Authority who may be involved. This requirement applies continuously and is not limited to normal working hours. The designated HSE Representative shall participate in all HSE related submittals. The Authority reserves the right to allow for an exception to modify these minimum qualification requirements for unforeseen circumstances, at the sole discretion of the Authority Project Manager and HSEC Department Manager.

On Facility Modification Projects, the Contractor shall submit a resume of the full time qualified on-site HSE Representative who reports directly to the Contractor's Project Manager or Superintendent, and who is responsible for safety oversight for field operations on the project no later than ten (10) days after receipt of Notice to Proceed, and prior to mobilization. The Contractor's On-Site HSE Representative shall hold a current certification from the BCSP, plus five (5) years construction or scope HSE experience enforcing HSE compliance on heavy construction or industrial construction project sites, the last two years of which have been administering HSE in the construction or scope discipline for which Contractor is contracting with the Authority. The Contractor's On-site HSE Representative(s) shall be on site during all operational hours. The designated HSE Representative shall participate in all HSE related submittals. The Authority reserves the right to allow for an exception and to modify these minimum qualification requirements for unforeseen circumstances, at the sole discretion of the Authority Project Manager and HSEC Department Manager.

1. Capital Programs may include, but are not limited to, projects involving demolition and construction of; heavy construction, rail projects, highway projects, parking lots and structures, fuel stations, building construction, facility modifications, bus base construction, EPA/DTSC remediation, AQMD air or soil monitoring, fuel tank removal or modification, major bus base modifications, handling potential hazardous waste projects, and similar projects as deemed a Capital Program at the sole discretion by the Authority.

2. Facility Modification Projects may include, but are not limited to, projects involving minor demolition and construction or improvement projects for transportation centers, bus base sites and/or building modifications, equipment and/or building upgrades, and similar projects as deemed a Facility Modification Project at the sole discretion by the Authority.

3. Competent Individual means an individual who is capable of identifying existing and predictable hazards in the surroundings or working conditions which are unsanitary, hazardous, or dangerous to employees and/or property, and who has authorization to take prompt corrective measures to eliminate them.

4. Qualified Individual means an individual who by possession of a recognized degree, certificate, certification or professional standing, or who by extensive knowledge, training, and experience, has successfully demonstrated his/her ability to solve or resolve problems relating to the subject matter, the work, or the project.

C. The Contractor shall designate a Competent Individual for each task, as required by Cal-OSHA standards or laws. The task Competent Individual shall be responsible for the prevention of accidents. If the Authority or any public agency with jurisdiction notifies the Contractor of any claimed dangerous condition at the site that is within the Contractor’s care, custody or control, the Contractor shall take immediate action to rectify the condition at no additional cost to the Authority. The Contractor shall be responsible for the payment of all fines levied against the Authority for deficiencies relating to the Contractor’s supervision or conduct and/or control of the scope agreement.

D. On Facility Modification Projects, the Authority Project Manager reserves the right to require the Contractor to provide one additional full-time safety representative with qualifications as identified in section 2.3 (C), above whenever the number of individuals from the Contractor, its subcontractors, suppliers, and vendors meets or exceeds 15 workers, there are multiple scope work sites, or as warranted by the scope of work at the sole discretion by the Authority.

E. On Capital Programs, the Authority's Project Manager reserves the right to require the Contractor to provide one additional full-time safety representative with qualifications as identified in item 2.3 (C) above whenever the number of individuals from the Contractor, its subcontractors, suppliers, and vendors meets or exceeds 50 workers, or is warranted by the scope of work.

2.4 SITE HSE ORIENTATION

The Contractor shall conduct and document a project site safety orientation for all Contractor personnel, subcontractors, suppliers, vendors, and new employees assigned to the project prior to performing any work on Authority projects, a copy of the HSE orientation attendance list shall be provided to the Authority Project Manager. The safety orientation, at a minimum, shall include, as applicable, Personal Protection Equipment (PPE) requirements, eye protection, ANSI class 2 reflective vests, designated smoking, eating, and parking areas, traffic speed limit and routing, cell phone policy, and barricade requirements. When required by scope, additional orientation shall include fall protection, energy isolation lock-out/tag-out (LOTO), confined space, hot work permit, security requirements, and similar project safety requirements.

2.5 INCIDENT NOTIFICATION AND INVESTIGATION

A. The Authority shall be promptly notified of any of the following types of incidents:

   1. Damage to Authority property (or incidents involving third party property damage);

   2. Reportable and/or recordable injuries (as defined by the U. S. Occupational Safety and Health Administration);

   3. Incidents impacting the environment, i.e. spills or releases on Authority property.

B. Notifications shall be made to Authority representatives, employees and/or agents. This includes incidents occurring to contractors, vendors, visitors, or members of the general public that arise from the performance of Authority contract work. An initial immediate verbal notification, followed by a written incident investigation report shall be submitted to Authority's Project Manager within 24 hours of the incident.

   A final written incident investigative report shall be submitted within seven (7) calendar days, and include the following information. The current status of anyone injured, photos of the incident area, detailed description of what happened, the contributing factors that led to the incident occurrence, a copy of the company policy or procedure associated with the incident and evaluation of effectiveness, copy of the task planning documentation, and the corrective action initiated to prevent recurrence. This information shall be considered the minimum elements required for a comprehensive incident report acceptable to OCTA.

C. A Serious Injury, Serious Incident, OSHA Recordable Injury / Illness, or Significant Near Miss shall require a formal incident review at the discretion of the Authority's Project Manager. The incident review shall be conducted within seven (7) calendar days of the incident. This review shall require a senior executive from the Contractors' organization to participate in the presentation. The serious incident presentation shall include action taken for the welfare of

the injured, a status report of the injured, causation factors leading to the incident, a root cause analysis, and a detailed recovery plan that identifies corrective actions to prevent a similar incident, and actions to enhance safety awareness.

1. Serious Injury: includes an injury or illness to one or more employees, occurring in a place of employment or in connection with any employment, which requires inpatient hospitalization for a period in excess of twenty-four hours for other than medical observation, or in which an employee suffers the loss of any member of the body, or suffers any serious degree of physical disfigurement.

2. Serious Incident: includes property damage of $500.00 or more, an incident requiring emergency services (local fire, paramedics and ambulance response), news media or OCTA media relations response, and/or incidents involving other agencies (Cal/OSHA, EPA, AQMD, DTSC, etc.) notification or representation.

3. OSHA Recordable Injury / Illness: includes and injury / illness resulting in medical treatment beyond First Aid, an injury / illness which requires restricted duty, or an injury / illness resulting in days away from work.

4. Significant Near Miss Incident; includes incidents where no property was damaged and no personal injury sustained, but where, given a slight shift in time or position, damage and/or injury easily could have occurred.

2.6 REGULAR INSPECTIONS & THIRD PARTY INSPECTIONS

A. Frequent and regular inspections of the project jobsite shall be made by the Contractor's On-site HSE Representative, or another Competent Individual designated by the Contractor. Unsafe acts and/or conditions noted during inspections shall be corrected immediately.

B. The Contractor is advised that representatives of regulatory agencies (i.e., CAL-OSHA, EPA, SCAQMD, etc.), upon proper identification, are entitled to access onto Authority property and projects. The Authority Project Manager shall be notified of their arrival as soon as possible.

2.7 ENVIROMENTAL REQUIREMENTS

A. The Contractor shall comply with Federal, State, county, municipal, and other local laws and regulations pertaining to the environment, including noise, aesthetics, air quality, water quality, contaminated soils, hazardous waste, storm water, and resources of archaeological significance. Expense of compliance with these laws and regulations is considered included in the agreement. Contractor shall provide water used for dust control, or for pre-wetting areas to be paved, as required; no payment will be made by OCTA for this water.

B. The Contractor shall prevent pollution of storm drains, rivers, streams, irrigation ditches, and reservoirs with sediment or other harmful materials. Fuels, oils,

bitumen, calcium chloride, cement, or other contaminants that would contribute to water pollution shall not be dumped into or placed where they will leach into storm drains, rivers, streams, irrigation ditches, or reservoirs. If operating equipment in streambeds or in and around open waters, protect the quality of ground water, wetlands, and surface waters.

C. The Contractor shall protect adjacent properties and water resources from erosion and sediment damage throughout the duration of the contract. Contractor shall comply with applicable NPDES permits and Storm Water Pollution Prevention Plan (SWPPP) requirements.

D. Contractor shall comply with all applicable EPA, Cal EPA, Cal Recycle, DTSC, SCAQMD, local, state, county and city standards, rules and regulations for hazardous and special waste handling, recycling and/ disposal. At a minimum, Contractor shall ensure compliance where applicable with SCAQMD Rule 1166, CCR Title 8, Section 5192, 29 CFR Subpart 1910.120, 49 CFR Part 172, Subpart H, 40 CFR Subpart 265.16 and CCR Title 22 Section 6625.16. Contractor shall provide OCTA a schedule of all hazardous waste and special or industrial waste disposal dates in advance of transport date. Only authorized OCTA personnel shall sign manifests for OCTA generated wastes. Contractor shall ensure that only current registered transporters are used for disposal of hazardous waste and industrial wastes. The Contractor shall obtain approval from OCTA for the disposal site locations in advance of scheduled transport date.

E. If the Contractor encounters on the site material reasonably believed to be asbestos, polychlorinated biphenyl (PCB) or other Hazardous Substance (as defined in California Health and Safety Code, and all regulations pursuant thereto) which has not been rendered harmless, the Contractor shall immediately stop work in that area affected and report the condition to the Authority in writing. The work in the affected area shall not thereafter be resumed except by written agreement of the Authority and Contractor if in fact the material is asbestos or polychlorinated biphenyl (PCB) or other hazardous substance and has not been rendered harmless. The work in the affected area shall be resumed in the absence of asbestos or polychlorinated biphenyl (PCB) or other hazardous substance, or when it has been rendered harmless, by written agreement of the Authority and the Contractor, or in accordance with a final determination by an Environmental Consultant employed by the Authority.

F. The Contractor shall not permit any hazardous substances to be brought onto or stored at the Project Site or used in the construction of the work, except for specified materials and commonly used construction materials for which there are no reasonable substitutes. All such materials shall be handled in accordance with all manufacturers' guidelines, warnings and recommendations and in full compliance with all applicable laws. All notices required to be given with respect to such materials shall be given by the Contractor. The Contractor shall not intentionally release or dispose of hazardous substances at the Project Site or into the soil, drains, surface or ground water, or air, nor shall the Contractor allow any Sub-Contractor, subcontractor or supplier or any other person for whose acts the Contractor or any subcontractor, vendor or supplier may be liable, to do so. For purposes of Contract Documents, "hazardous

substance" means any substance or material which has been determined or during the time of performance of the work is determined to be capable of posing a risk of injury to health, safety, property or the environment by any federal, state or local governmental authority.

2.8 VEHICLE AND ROADWAY SAFETY REQUIREMENTS

A. The Contractor shall ensure that all Contractor vehicles, including those of its subcontractors, suppliers, vendors and employees are parked in designated parking areas, are identified by company name and/or logo, and comply with traffic routes, and posted traffic signs in areas other than the employee parking lots.

B. Personal vehicles belonging to Contractor employees shall not be parked on the traveled way or shoulders including any section closed to public traffic, or areas of the community that may cause interference or complaints

C. The Contractor shall comply with California Department of Transportation safety requirements and special provisions when working on highway projects.

D. The Contractor shall conform to American Traffic Safety Services Association (Quality Standard for Work Zone Control Devices 1992).

2.9 LANGUAGE REQUIREMENTS

For safety reasons, the Contractor shall ensure employees that do not read, or understand English, shall be within visual and hearing range of a bilingual supervisor or responsible designee at all times when on the Authority property or projects.

2.10 PERSONAL PROTECTIVE EQUIPMENT AND CLOTHING

Contractors, and all associated subcontractors, vendors and suppliers are required to provide their own personal protective equipment (PPE), including eye, head, foot, and hand protection, respirators, reflective safety vests, and all other PPE required to perform their work safely on Authority projects.

A. RESPIRATORS (CCR Title 8, Section 5144) - The required documentation for training and respirator use shall be provided to the Authority's Project Manager upon request within 72 hours. All compliance documentation as required by CCR Title 8, Section 5144, Respiratory Protective Equipment.

B. EYE PROTECTION – The Authority requires eye protection on construction projects and work areas that meet ANSI Z-87.1 Standards.

C. BUS BASE – Minimum PPE required includes but is not limited to; Eye protection, class 2 reflective vest, steel toe or construction type footwear that meets ANSI Z41 1991 are recommended.

D. CONSTRUCTION PROJECTS - Minimum PPE required includes but is not limited to; hard hat, eye protection, hand protection, class 2 reflective vest, safety toe footwear that meets ANSI Z41 1991 are recommended.

E. HARD HATS: Approved hard hat that meet ANSI Z89. 1 (latest revision). Hard hats should be affixed with the company/agency logo and/or name. The bill shall be worn forward. Metal hard hats and cowboy style are forbidden on Authority projects.

F. FOOTWEAR: Enclosed leather that covers the ankles, such as a construction type boot. Employees shall not wear casual dress shoes, open toe, sneakers, sandals, canvas-type shoes, or other shoes that have thin soles or heels that are higher than normal in construction work areas. Safety toe footwear that meets ANSI Z41 1991 are recommended on construction sites and in operating facilities.

G. CLOTHING/SHIRTS: minimum or waist length shirts with sleeves (4" minimum).

H. CLOTHING/TROUSERS: Cover the entire leg. If flare-legged trousers are worn, the trouser bottoms must be tied to prevent catching. No sweat pants, or trousers with holes.

2.11 AERIAL DEVICES (CCR Title 8, Section 3648)

Aerial devices are defined in CCR Title 8 as any vehicle-mounted or self-propelled device, telescoping extensible or articulating, or both, which is primarily designed to position personnel. If aerial devices are to be used, the required documentation in CCR Title 8, Section 3648 shall be provided to the Authority's Project Manager, upon request, within 72 hours.

2.12 CONFINED SPACE ENTRY (CCR Title 8, Section 5157)

Before any employee will be allowed to enter a confined space, the required documentation as required by CCR Title 8, Section 5157 shall be provided to the Authority's Project Manager, upon request, within 72 hours.

A. RECOMMENDED: a copy of the most recent calibration record for each air monitoring unit, 3-gas monitor or "sniffer" to be used by the Entry Supervisor prior to entering permit-required confined spaces.

2.13 CRANES

A. Crane activity shall comply with 29 CFR 1926.550, CCR Title 8 Standards, manufacture's recommendations and requirements, applicable American Society of Mechanical Engineers (ASME), and ANSI Standards. In addition, Contractor shall comply with the following requirements: Prior to using mobile cranes, the Contractor shall provide to the Authority Project Manager, items I,

2 & 3 of the following documentation a minimum of seven (7) days prior to activity, and item 4 on each day of crane activity.

1. Cranes require a submittal of the annual certification, and copy of the cranes most recent quarterly inspection.

2. A copy of each crane operator's qualification (NCCCO or equivalent) of company-authorized crane operators that have been properly trained in the equipment's use and limitations. Operator certification as required by CCR Title 8, Section 5006.1.

3. A rigging plan is required for all lifts. Critical lifts require an engineered plan designed by a registered professional engineer licensed in the State of California.

4. Contractor shall provide the name and qualifications of each "Qualified Rigger" as defined by OSHA.

5. Rigging scope activity shall comply with 29 CFR Subparts1926.250, 1929.753 and CCR Title 8 Standards.

6. All rigging equipment shall be free from defects, in good operating condition and maintained in a safe condition.

7. Rigging equipment shall be inspected by a designated, competent employee prior to initial use on the project, prior to each use, and documented inspections performed regularly. Records shall be kept on jobsite of each of these inspections by contractor and be made available to the Authority upon request within 72 hours.

8. Only one (1) sling eye should be in a hook, for multiple slings a shackle shall be used to prevent separation of slings, and prevent stress on weak points of the hook.

9. Contractor shall prepare a documented daily crane inspection report.

B. Pick and carry with rubber tired cranes is forbidden on Authority projects.

C. Engineered Critical Lifts

A critical lifts is established where any one of the following conditions are created:

1. Where in the crane's current configuration at any point during the lift, a gross load weight exceeds 75% of the capacity of the crane.

2. A gross weight equal to, or greater than 10 tons.

3. Lifts over buildings, equipment, public roadways, structures, or power lines.

4. A single lift where two or more cranes are used, including tandem lifts and tailing cranes.

5. Lifts made in close proximity of power lines, as defined by CCR Title 8 voltage clearance specifications.

6. Lifts involving helicopters, and specialized or unique and complex rigging equipment.

7. Hoisting of suspended work platforms.

8. Static tower crane erection and dismantlement.

9. Making lifts below the ground level where the crane is positioned.
   Note: Where the below the ground lift is minimal (evaluated by California registered professional engineer), a critical lift plan may not be required.

D. Critical Lift Plan

Where a critical lift will be performed, a written critical lift plan shall be submitted to the Authority Project Manager prior to commencing with the lift. The written plan shall include the following:

1. Crane manufacturer, capacity, and all specifications for the configuration to be used for the lift.

2. Load chart data for the crane to be used to make the lift. Total calculated weight of the load to be lifted including all rigging and other deductions consistent with the manufacturer's load chart.

3. Engineering data shall be provided on the hook assembly (manufacture's certification or independent laboratory testing and load testing within the past 60 days), below-the hook rigging, and all specialized below-the-hook lifting devices.

4. Diagrams of the lift that provides geometrical conditions of the load, rigging, and all crane positions during the lift. The drawing shall provide the following:

   A. Locations of all components to be lifted prior, during and after the lift is completed.

   B. Radius points.

   C. Swing patterns.

D. In the event that the lift must be aborted, positions where the load may be safely landed.

E. Areas where any personnel, public, and vehicles must be evacuated during the lift.

5. Potential ground loading for each point of contact by the crane in selected locations in which the crane will perform the critical lift.

6. Soil and subsurface data and information pertaining to the location on which the crane used for the critical lift will be positioned. This information shall be procured from an authoritative source such as a geotechnical engineer or a professional civil engineer registered in the state of California.

   Note: *This information may be available from the Authority for selected locations on some projects.*

7. An engineer shall use the data provided in #5 and #6 above to verify and confirm the following:

   A. That the soil and subsurface conditions are capable of supporting all loads imposed during the critical lift.

   B. That the designs of cribbing and other supports used under the crane load points are appropriate to safely transfer such loads.

8. Signature and stamp on the plan by a California registered professional engineer, evidencing review of the plan as meeting the requirements that all loads and load information and calculations contained in the plan are approved, acceptable and safe to perform.

9. Operator qualifications.

10. Method by which communication will be provided to the crane operator. (Designated signal person, two-way radio, hard wire phone system, etc.).

11. A critical lift hazard analysis which identifies the particular hazards (including weather, wind, obstructions, etc.) associated with the lift and the means and methods to reduce, mitigate, or eliminate the hazards.

12. Emergency action plan.

13. Documentation of lift and pre-job meeting shall be conducted by Contractor's Project Manager.

The written plan shall be submitted 7 days prior to any critical lift for review by the Authority Project Manager and the Authority HSEC department. No critical lifts shall be conducted prior to such review.

E. OVERHEAD CRANES

Before using the Authority overhead cranes, each Contractor shall designate a limited number of employees to attend a training session on the use and limitations of overhead cranes with designated Authority personnel.

2.14 DEMOLITION OPERATIONS (CCR Title 8, Section 1734)

Before starting demolition activities the required documentation shall be provided to the Authority's Project Manager, upon request, within 72 hours. Contractor shall provide all compliance documentation as required by CCR Title 8 Article 31.

A. The Contractor shall be responsible for visiting and examining the project site to assess and personally determine the extent of demolition, associated work, debris removal, disposal and general work to be done under this section.

B. The Contractor shall take possession of all demolished materials, except as noted otherwise in the Contract Documents, and be responsible for disposing of them in accordance with applicable laws and regulations. On-site burning or burial of demolition materials will not be permitted.

C. Provide continuous noise and dust abatement as required, preventing disturbances and nuisances to the public, workers, and the occupants of adjacent premises and the surrounding areas. Dampen areas affected by demolition operation as necessary to prevent dust nuisance.

D. Site demolition plan: Indicate methods, procedures, equipment, and structures to be employed. Specify safety measures in accordance with applicable codes including signs, barriers, and temporary walkways. Plans shall be prepared by a qualified person (CSP, CIH, CHST, CHMM, etc.), or as necessary by a professional engineer licensed to practice in the State of California, when so required by the provisions of the California Board for Professional Engineer and Surveyors.

E. Equipment, haul routes, and disposal sites to be used in the demolition and disposal work. Copy of manifests showing delivery of disposed materials in accordance with the plan and permit conditions. Certification that all demolished materials removed from the site have been disposed of in accordance with applicable laws and regulations.

2.15 EXCAVATION OPERATIONS (CCR Title 8, Section 1541)

Before starting excavation activities more than 5 feet deep into which people shall enter, the required documentation shall be provided to the Authority's Project Manager, upon request, within 72 hours. All compliance documentation shall comply with the following CCR Title 8, Section 1541 requirements:

A. A copy of the Contractor's Excavation Permit.

B. Attention is directed to the applicable sections of the Labor Code concerning trench excavation safety plans, "Trench Safety." Excavation for any trench 5 feet or more in depth shall not begin until the Contractor has received approval from the Engineer of the Contractor's detailed plan for worker protection from the hazards of caving ground during the excavation of that trench and any design calculations used in the preparation of the detailed plan. Excavations 20 feet or greater shall be engineered and plan stamped by a California registered professional engineer.

C. The detailed plan shall show the details of the design of shoring, bracing, sloping or other provisions to be made for worker protection during the excavation. No plan shall allow the use of shoring, sloping or a protective system less effective than that required by the Construction Safety Orders of the Division of Occupational Safety and Health. If the plan complies with the shoring system standards established by the Construction Safety Orders, the plan shall be submitted at least five (5) days before the Contractor intends to begin excavation for the trench.

D. Excavations and trenches shall be inspected by a "Competent Person" daily and after every rainfall to determine if they are safe. Daily inspections shall be recorded. Documentation is to be kept on site and available for review upon request.

E. Excavations are considered class 'C' soil unless documented testing in accordance with 29 CFR Subpart P, Section 1926.650 and CCR Title 8 Standards supports a class 'B' soil classification and is confirmed and stamped by a California registered professional engineer. In no case will excavations be classified as class 'A' soil.

2.16 FALL PROTECTION (CCR Title 8, Sections 1669-1671)

The following standards are required when performing work on Authority property. The required documentation shall be provided to the Authority's Project Manager, upon request, within 72 hours.

A. Fall protection is required for workers exposed to falls in excess of six (6) feet.

B. When conventional fall protections methods are impractical or create a greater hazard, a written plan in conformance with CCR Title 8, Article 24, shall be submitted to the Authority a minimum of seven (7) days in advance of the scheduled activity.

2.17 FORKLIFTS, BACKHOES AND OTHER INDUSTRIAL TRACTORS (CCR Title 8, Section 3664)

CCR Title 8 defines backhoes as "industrial tractors". All compliance documentation shall be provided as required by CCR Title 8, Section 3664. The following required documentation shall be provided to the Authority's Project Manager, upon request, within 72 hours:

A. A copy of each operator's certificate or a list of company-authorized industrial tractor operators that have been properly trained in the equipment's use and limitations. Please state which equipment, and model each operator has been authorized to operate (i.e. forklifts, backhoe, bulldozer, front-end loader, etc.).

2.18 ELECTRICAL OPERATIONS

HIGH VOLTAGE (CCR Title 8, Sections 2700-2974)

Any work on electrical equipment defined by OSHA as high-voltage, at or above 600 volts, requires specialized training certifications and personal protective equipment. Before any high-voltage work commences, the Authority Project Manger must be notified and must provide approval. The following required NFPA 70E certification and a certificate of training from a recognized organization of a two day high voltage safety training course shall be provided to the Authority's Project Manager, upon request, within 72 hours:

A. A list of the name(s) of the company-designated high voltage Qualified Electrical Worker(s)

LOW VOLTAGE (CCR Title 8, Sections 2299-2599)

Only qualified persons shall work on electrical equipment or systems.

A. Electrical Certification of Training; Contractor employees working on or around electrical panels, wiring, motors, electrical energy sources or similar electrical devices shall have attended a NFPA 70E, Electrical Safety Course and provide to the OCTA Project Manager a copy of employees' NFPA 70E qualification certificate of training for each employee assigned to electrical tasks on OCTA property or projects.

2.19 POWDER-ACTUATED TOOLS (CCR Title 8, Section 1685)

Before using tools such as "Hilti guns" or other powder-actuated tools, the following required documentation shall be provided to the Authority's Project Manager, upon request, within 72 hours.

A. A copy of each qualified person's valid operator card.

2.20 SCAFFOLDS (CCR Title 8, Sections 1635.1-1677)

Scaffold erection shall be in compliance with CCR Title 8 Standards. All compliance documentation shall be provided as required by CCR Title 8, Sections 1635.1-1677. In addition, the Contractor shall comply with the following additional requirements.

A. All scaffolds on Authority project shall be inspected by a competent person qualified for scaffolds in accordance with CCR Title 8 Standards.

B. Contractor shall arrange for a third party inspection, at least quarterly, by a credentialed professional (insurance carrier, scaffold manufacturer representative, or similar) in addition to the contractors daily self inspections.

C. A proper scaffold inspection and tagging system shall be maintained identifying compliance status (Example: Green/safe, Yellow/modified-fall protection required, Red/unsafe-do not use).

D. Contractor shall have a fall protection plan that meets CCR Title 8 Standards for scaffold erectors, an erection/dismantling plan shall be submitted to Authority Project Manager for review prior to start of activity.

E. Scaffold erection/dismantling shall install handrails beginning on the first level above ground erected, and erectors shall plan erection and dismantling in a manner to maximize handrail protection and minimize employees at unprotected areas.

2.21 WARNING SIGNS AND DEVICES

Signs, signals, and/or barricades shall be visible at all times when and where a hazard exists. Overhead tasks, roofing tasks, excavations, roadwork activity, demolition work, and other recognized hazards shall have guardrail protection, warning barricades, or similar protective measures acceptable to the Authority's Project Manager. Signs, signals, and/or barricades shall be removed when the hazard no longer exists.

2.22 STEEL ERECTION

Steel Erection scope activity shall comply with 29 CFR Subpart R, Section 1926.750, and CCR Title 8 Standards. In addition to OSHA Standards, Contractor shall comply with the following requirements.

A. Erection planning should incorporate installation methods using aerial devices (man-lifts) and elevated work platforms (scissor lift) to minimize fall hazards of climbing steel where possible. A detailed written job safety analysis (JSA) shall identify installation methods, equipment, and control methods to minimize potential fall hazards.

B. The Contractor shall not allow any employee to walk the steel unprotected from falls. Contractor employees must be tied-off and "coon" the beam until safety cables are provided to which employees shall use 100% tie-off protection. Two lanyards are required to ensure 100% tie-off protection.

C. A safe means of access to the level being worked shall be planned. Climbing and sliding down columns are not considered safe access and are forbidden on Authority projects.

D. A qualified rigger shall inspect the rigging prior to each shift and each lift.

E. Multiple lift rigging (Christmas Treeing) lifts are forbidden on Authority property and controlled projects.

2.23 AUDITS

A. The Authority may make periodic patrols of the project site as a part of its normal security and safety program. The Contractor shall not be relieved of its aforesaid responsibilities and the Authority shall not assume same, nor shall it be deemed to have assumed, any responsibility otherwise imposed upon the Contractor, as a result of safety patrols by the Authority.

B. The Authority may audit the Contractor's safety program for HSE compliance at various intervals of the project, at the sole discretion of the Authority. Elements may include, but are not limited to: OSHA injury & illness records and logs, Job Safety Analysis and safety plans, equipment operator licenses and training records, incident reports, meeting minutes, engineered plans, safety meeting records, crane and rigging plans, equipment inspection records, qualifications of and interviews with key Contractor management personnel, and other similar information. The Contractor shall support and cooperate with these audits at no additional compensation or schedule impacts with this contract.

2.24 RAILWAY SAFETY PRECAUTIONS

A. Work on operating railways shall be in compliance with 49 CFR, Part 214, CCR Title 8 Standards, and the Southern California Regional Rail Authority (SCRRA).

B. New construction rail projects require that all employers and contractors are responsible to assure employees are trained and understand on-track safety procedures, and follow roadway worker rules identified in 49 CFR, Part 214, CCR Title 8, SCRRA, the California Department of Transportation (CalTrans), and OCTA HSE Construction Management Requirements (i.e., item E references).

C. Minimum PPE for workers include hard hat, safety glasses, orange (i.e., rail company approved color) class 2 reflective vest, safety toe footwear that meets ANSI Z41 1991 (lace-up type over the ankle) and hearing protection (on person and worn as necessary).

2.25 FINES

The Contractor shall be responsible for the payment of all fines levied against the Authority for HSE violations arising from or related to activities over which Contractor has responsibility per the contract..

2.26 COMPLIANCE COSTS

Compliance with Health, Safety and Environmental Compliance identified in these aforementioned Authority Safety Specifications shall be at the expense of the Contractor, and included in Bid Documents to the Authority for the Contractor's scope. The Authority shall incur no additional cost or schedule impacts by Contractor, for compliance with California Construction Safety Orders, CCR Title 8 Standards, Federal OSHA Standards, and the Authority Safety Specifications for the protection of persons and property.

2.27 REFERENCES

A. CCR Title 8 Standards (Cal/OSHA)
B. CFR Including 1910 and 1926 Standards
C. NFPA, NEC, ANSI, NIOSH Standards
D. USACE Construction Quality Management Manuel (EM-385-1-1)
E. Construction Industry Institute (CII)
F. OCTA Construction Management Procedures Manual
G. OCTA Yard Safety Rules

END OF DOCUMENT

BID BOOKLET INVITATION FOR BID (IFB) 4-2550
BOOK 2 OF 2

REPLACEMENT OF MECHANICAL UNITS AT THE SANTA ANA BUS BASE

ORANGE COUNTY TRANSPORTATION AUTHORITY
550 South Main Street
P.O. Box 14184
Orange, CA 92863-1584
(714) 560-6282

Key IFB Dates

Issue Date:	November 26, 2024
Pre-Bid Conference/Site Visit:	December 5, 2024
Questions/Approved Equal Submittal:	December 20, 2024
Bids Submittal Date:	February 3, 2025

BID DOCUMENT SUBMISSION CHECKLIST

IFB NO._____

PROJECT TITLE: _____

The Orange County Transportation Authority has prepared this checklist as a reminder of the documents required to be submitted with the bid. These documents must be complete, fully executed, notarized where appropriate as required in the bid documents in order to render the bid responsive.

THE FOLLOWING CHECKED DOCUMENTS MUST BE SUBMITTED WITH THE BID:

General IFB Forms:

	Bid Form – include all pages 1 through 4. *All addenda must be acknowledged, signed, dated, corporate seal*
	Bid Security Form: Bid Bond or Check (circle one) *Correct bid number, signed, dated, notarized (bid bond)*
	Information Required of Bidder *Provide all information, signed*
	Bidders Certificate of Compliance Regarding Workers Compensation Insurance *Signed and dated*
	Bidders Certificate of Compliance Regarding State of California Business and Professions Code Section 7028.15 *Signed, dated, notarized*
	List of Subcontractors (Exhibit D) *License Number- address/ name should match that associated with License # on CSLB website, DIR Registration Number, Description of work (one subcontractor for each portion), Dollar amount and Bidders name at bottom of form*
	Status of Past and Present Contracts Form *Signed, dated*
	Non-Collusion Declaration Form *Signed, dated*
	Iran Contracting Act Certification Applicable (Bids over $1,000,000 only) *Signed, dated, (select one option only)*

Signature on this Bid Document Submission Checklist is affirmation that items marked above are hereby submitted with the bid. I understand that failure to complete and/or submit any of the required documents may deem my bid non-responsive.

_____ _____
Authorized Signature Print Name and Title

_____ _____
Firm Name Date

OCTA

BID FORM

The undersigned hereby proposes to perform all work for which a contract may be awarded and to furnish any and all plant, labor, services, material, tools, equipment, supplies, transportation, utilities, and all other items and facilities necessary therefore as required in the **IFB 4-2550**, **"REPLACEMENT OF MECHANICAL UNITS AT THE SANTA ANA BUS BASE"**, and to do everything required therein; and further proposes that, if this bid is accepted, will contract in the form and manner stipulated to perform all the work in strict conformity therewith within the time limits set forth therein, and will accept as full payment therefore, the following price:

Description	**Total Lump Sum Bid Amount**
_____	$ _____

A cashier's check/certified check/bid bond (circle applicable term) properly made payable to Orange County Transportation Authority, hereinafter designated as the Owner, for the sum of _____ Dollars ($ _____) which amount is not less than ten percent (10%) of the total amount of this bid, is attached hereto and is given as a guarantee that the undersigned will execute the Agreement and furnish the required bonds, "Guaranty" and "Certificate of Insurance", if awarded the contract, and in case of failure to do so within the time provided, (a) the proceeds of said check shall be forfeited to the Authority; or (b) surety's liability to the Authority for forfeiture of the face amount of the bond shall be considered as established [circle (a) or (b)].

The undersigned hereby represents that:

BID FORM, PAGE 2

1. Bidder has thoroughly examined and become familiar with the work required and documents included under this IFB. The bidder understands that the award of the contract, if it is awarded, will be based on the lowest total bid submitted by a responsive and responsible bidder, and further, that the amounts and the total on the Bid Form will be subject to verification by the Authority.

2. By investigation at the site of the work and otherwise, it is satisfied as to the nature and location of the work and is fully informed as to all conditions and matters, which can in any way affect the work or the cost thereof.

3. Bidder fully understands the scope of the work/specifications and has checked carefully all words and figures inserted in said Invitation For Bids (IFB) and further understands that the Authority will in no way be responsible for any errors or omissions in the preparation of this bid. Bidder further asserts that it is capable of performing quality work to meet Authority's requirements.

4. Bidder will execute the Agreement and furnish the required Performance and Payment Bonds, Guaranty and proof of insurance coverage within ten (10) calendar days after notice of acceptance of bid by the Authority; and further, that this bid may not be withdrawn for a period of 120 calendar days after the date set for the opening thereof, unless otherwise required by law. If any bidder shall withdraw its bid within said period, the bidder shall be liable under the provisions of the Bid Security, or the bidder and the surety shall be liable under the Bid Bond, as the case may be.

5. Bidder hereby certifies that this bid is genuine and not a sham or collusive or made in the interest or on behalf of any person not herein named, and the undersigned has not directly or indirectly induced or solicited any other bidder to put in a sham bid, or any other person, firm, or corporation to refrain from bidding; the undersigned has not in any manner sought by collusion to secure for himself an advantage over any other bidder.

6. In conformance with current statutory requirements of Section 1860, et. seq., of the Labor Code of the State of California, the Bidder shall execute the document included in this IFB entitled "Bidder's Certificate of Compliance Regarding Workers' Compensation Insurance."

7. Bidder hereby further certifies that each, and every representations made in this bid are true and correct and made under penalty of perjury.

BID FORM, PAGE 3

8. Bidder shall permit the authorized representative of the Authority to inspect and audit all data and records of bidder relating to this bid, and if awarded a contract resulting from this bid, shall permit such inspection and audit of all data and records of bidder related to bidder's performance of such contract.

9. Bidder does not employ anyone who is now, or for one (1) year immediately prior to the date of this offer was, a director, officer, member, or employee of the Orange County Transportation Authority. The undersigned has not agreed to pay a fee contingent upon the award of a contract resulting from this bid to anyone who is now, or for one (1) year immediately prior to the date of this bid was, a director, officer, member, or employee of the Orange County Transportation Authority. No member of or delegate to the Congress of the United States shall be admitted to any share of the contract or to any benefit arising therefrom.

10. If awarded a contract resulting from this bid, bidder shall not discriminate against any employee or applicant for employment because of race, religion, color, sex, age or national origin. The bidder shall take affirmative action to ensure that applicants are employed, and that employees are treated during their employment, without regard to their race, religion, color, sex, age or national origin. Such actions shall include, but not be limited to the following: employment, upgrading, demotion, or transfer; recruitment or recruitment advertising; layoff or termination; rates of pay or other forms of compensation; and selection for training, including apprenticeship.

11. Bid will be in effect for 120 calendar days after the bid closing date.

BID FORM, PAGE 4

Now: In compliance with the **Invitation For Bids (IFB) 4-2550**, **"REPLACEMENT OF MECHANICAL UNITS AT THE SANTA ANA BUS BASE"**, the undersigned, with full cognizance thereof, hereby proposes to perform the entire work in strict compliance with all of the said requirements and provisions for the prices set forth herein upon which award of contract is made. The undersigned affirms that the information provided herein is true and accurate and that any misrepresentations are made under penalty of perjury.

Dated _____ , 202_ Bidder _____

The above bid includes Signature _____

Addenda Nos. _____ Name _____

Title _____

Bidder's Authorized Representative _____

Title _____

Telephone # _____

Fax # _____

Email Address _____

Bidders post office address _____

_____

_____

Corporation organized under the laws of the State of _____

Contractor's License No. _____

Expiration Date of License _____

Surety or sureties _____

_____

(CORPORATE SEAL)

BID SECURITY FORM
BID BOND

KNOW ALL MEN BY THESE PRESENTS:

That, _____ as principal and Bidder and _____ as Surety, are held and firmly bound unto the Orange County Transportation Authority, of State of California, hereinafter referred to as "Authority," in the sum of _____ Dollars ($_____), to be paid to the Authority, its successors, and assigns; for which payment, well and truly to be made, bind themselves, their heirs, executors, administrators, successors, and assigns, jointly and severally, firmly by these presents, this amount being ten percent (10%) of the total amount of the Bid.

THE CONDITION OF THIS OBLIGATION IS SUCH, that if the certain bid of the above named bounden principal _____
_____
for_____ at the Orange County Transportation Authority's _____ as specifically set forth in documents entitled **IFB 4-2550, "REPLACEMENT OF MECHANICAL UNITS AT THE SANTA ANA BUS BASE",** shall not be withdrawn within a period of 120 calendar days after the date set for the opening of bids, (unless otherwise required by law, and notwithstanding the award of the contract to another Bidder), and that if said bid is accepted by the Authority through action of its legally constituted contracting authorities and if the above bounden_____ its heirs, executors, administrators, successors and assigns, shall execute a contract for such construction and deliver the required Performance and Payment Bonds, "Guaranty," and proof of insurance coverage within ten (10) calendar days after notification of contract award from the Authority, then this obligation shall become null and void; otherwise it shall be and remain in full force and effect.

IN WITNESS WHEREOF, we hereunto set our hands and seals this _____ day of _____, 202_.

_____
_____

NOTE: The standard printed bond form of any bonding company acceptable to the Authority may be used in lieu of the foregoing approved sample bond form provided the security stipulations protecting the Authority are not in any way reduced by use of the security company's printed standard form.

BID SECURITY FORM
CHECK TO ACCOMPANY BID

(NOTE: The following form shall be used in case check accompanies bid)

Accompanying this bid is a Certified or Cashiers check (circle the appropriate one) payable to the order of Orange County Transportation Authority, hereinafter referred to as "Authority" for _____ dollars ($_____), this amount being ten percent (10%) of the total amount of the Bid submitted in response to **IFB 4-2550, "REPLACEMENT OF MECHANICAL UNITS AT THE SANTA ANA BUS BASE"**. The proceeds of this check shall become the property of Authority provided this bid shall be accepted by Authority through action of its legally constituted contracting authorities and the undersigned shall fail to execute a contract and furnish the required Guaranty Form, Performance and Payment Bonds and proof of insurance coverage within ten (10) calendar days after date of notification of contract award from the Authority. The proceeds of this check shall also become the property of the Authority if the undersigned bidder withdraws the bid within the period of 120 days after the date set for the opening thereof, unless otherwise required by law, and notwithstanding the award of the contract to another bidder. Otherwise, the check shall be returned to the undersigned.

Bidder:_____

Signature:_____

Date:_____

NOTE: If the bidder desires to use a bond instead of check, the Bid Bond form shall be executed and the sum of this bond shall be ten percent [10%] of the total amount of the bid.

INFORMATION REQUIRED OF BIDDER

The bidder is required to supply the following information. Additional sheets may be attached if necessary.

1. Name of Bidder: _____
2. Business Address: _____
3. Telephone ( )_____ Fax ( )_____E-Mail: _____
4. Type of Firm - Individual, Partnership or Corporation: _____
5. Corporation organized under the laws of state of: _____
6. Contractor's License No.: _____ Class_____Years of Experience: __
7. Expiration Date of License: _____
8. Is your firm a certified small business in California? Yes____ No____
9. List the names and addresses of all owners of the firm or names and titles of all officers of the corporation:

   _____

   _____

INFORMATION REQUIRED OF BIDDER, PAGE 2

10. Please list the following: a) All prior and current license numbers that the current owner(s) or officers possess or have possessed in the last five years and the current status of those license; b) any prior company names that the owner(s) had in operation during the previous five years.

Current Officers or Owners Name	Prior Company Names (During the last 5 years)	Prior and Current License Numbers	Status of License

Note: If additional space is required to detail the information requested, please attach another page. All information requested must be included. Failure to identify all of the information may result in your bid being found non-responsive and your bid being rejected.

11. List all construction projects (public and private) for which Bidder has provided general contractor services for the past three years:

Contract Type (Public or Private)	Project Description	Dates of Service	Total Cost	Name and Address of Owner	Contact Name and Phone Number

Note: If additional space is required to detail the information requested, please attach another page. All information requested must be included. Failure to identify all of the information, may result in your bid being found non-responsive and your bid being rejected.

12. List the name, address and phone number of Superintendent for this project:

_____

13. List all construction projects (public and private) for which Superintendent has provided services as a Superintendent for the past three years.

Contract Type (Public or Private)	Project Description	Dates of Service	Total Cost	Name and Address of Owner	Contact Name and Phone Number

Bidder hereby certifies that it:

_____ is a certified Disadvantaged Business Enterprise as defined herein.

_____ is not a Disadvantaged Business Enterprise as defined herein.

NOTE: If requested by the Authority, bidder shall furnish a certified financial statement, financial data, or other information and references sufficiently comprehensive to permit an appraisal of its current financial condition.

I hereby certify the above is true and correct to the best of my belief.

_____
Signature

_____
Name

_____
Title

_____
Company Name

_____
Telephone Number

_____
Fax Number

_____
Email Address

NOTICE OF REQUIREMENT FOR AFFIRMATIVE ACTION TO ENSURE EQUAL EMPLOYMENT OPPORTUNITY (EXECUTIVE ORDER 11246)

1. The Bidders' attention is called to the "Equal Opportunity Clause" and the "Standard Federal Equal Employment Opportunity Construction Contract Specifications" set forth herein.

2. The goals and timetables for minority and female participation, expressed in percentage terms for the Contractor's aggregate work force in each trade on all construction work in the covered area, are as follows:

   Timetable Goals for Minority Participation for Each Trade (11.9)

   Goals for Female Participation in Each Trade (6.9)

   These goals are applicable to all the Contractor's construction work (whether or not it is federal or federally assisted) performed in the covered area.

   The Contractor's compliance with the Executive Order and the regulations in 41 C.F.R. Part 60-4 shall be based on its implementation of the Equal Opportunity Clause, specific affirmative action obligations required by the specifications set forth in 41 C.F.R. 60-4.3 (a), and its efforts to meet the goals established for the geographical area where the contract resulting from this solicitation is to be performed. The hours of minority and female employment and training must be substantially uniform throughout the length of the contract, and in each trade, and the Contractor shall make a good faith effort to employ minorities and women evenly on each of its projects. The transfer of minority or female employees or trainees from contractor to contractor or from project to project for the sole purpose of meeting the contractor's goals shall be a violation of the contract, the Executive Order and the regulations in 41 C.F.R. Part 60-4. Compliance with the goals will be measured against the total work hours performed.

3. The Contractor shall provide written notification to the Director of the Office of Federal Contract Compliance Programs within ten (10) working days of award of any construction subcontract in excess of $10,000 at any tier for construction work under the contract resulting from this solicitation. The notification shall list the name, address and telephone number of the subcontractor; employer identification number; estimated dollar amount of the subcontract; estimated starting and completion dates of the subcontract; and the geographical area in which the contract is to be performed.

4. As used in this Notice, and in the contract resulting from this solicitation, the "covered area" includes the County of Orange, California.

BIDDER'S CERTIFICATE OF COMPLIANCE REGARDING WORKERS' COMPENSATION INSURANCE

In conformance with current statutory requirements of Section 1860, et. seq., of the Labor Code of the State of California, the undersigned confirms the following certification:

> "I am aware of the provisions of Section 3700 of the Labor Code which require every employer to be insured against liability for Workers' Compensation or to undertake self-insurance in accordance with the provisions of that code and I will comply with such provisions before commencing the performance of the work of this Contract."

Bidder/Contractor: _____

Signature: _____

Name and Title: _____

Date: _____

BIDDER'S CERTIFICATE OF COMPLIANCE
REGARDING
STATE OF CALIFORNIA
BUSINESS AND PROFESSIONS CODE SECTION 7028.15

Contractor License Number: _____

Expiration Date of Contractor's License: _____

Each, every and all of the representations made by Bidder in the attached bid are true and correct.

Name of Bidder/Contractor: _____

Signed: _____

Title: _____

Subscribed to and sworn before me, a Notary Public in and for the State of California, on _____, 202___.

_____
Notary Public

My commission expires on:

_____, 202__
(NOTARY SEAL)

LIST OF SUBCONTRACTORS

List only the subcontractors, which will perform work or labor or render services to the bidder in excess of one-half of one percent (1/2 of 1%) of the bidder's total bid amount. Do not list alternative subcontractors for the same work. (Use additional sheets if necessary.)

Name & Address Under Which Subcontractor is Licensed	License Number	DIR Registration No.	Specific Description of Work to be Rendered	Small Business Y/N	Type	Dollar Amount
						$
						$
						$
						$
						$
						$
TOTAL VALUE OF SUBCONTRACTED WORK						$

Bidder's Name _____

STATUS OF PAST AND PRESENT CONTRACTS FORM

On the form provided below, Offeror/Bidder shall list the status of past and present contracts where the firm has either provided services as a prime vendor or a subcontractor during the past five (5) years in which the contract has been the subject of or may be involved in litigation with the contracting authority. This includes, but is not limited to, claims, settlement agreements, arbitrations, administrative proceedings, and investigations arising out of the contract.

A separate form must be completed for each contract. Offeror/Bidder shall provide an accurate contact name and telephone number for each contract and indicate the term of the contract and the original contract value. Offeror/Bidder shall also provide a brief summary and the current status of the litigation, claims, settlement agreements, arbitrations, administrative proceedings, or investigations. If the contract was terminated, list the reason for termination.

Offeror/Bidder shall have an ongoing obligation to update the Authority with any changes to the identified contracts and any new litigation, claims, settlement agreements, arbitrations, administrative proceedings, or investigations that arise subsequent to the submission of the bid. Each form must be signed by an officer of the Offeror/Bidder confirming that the information provided is true and accurate.

Project city/agency/other:	
Contact Name:	**Phone:**
Project Award Date:	**Original Contract Value:**
Term of Contract:	
(1) Litigation, claims, settlements, arbitrations, or investigations associated with contract:	
(2) Summary and Status of contract:	
(3) Summary and Status of action identified in (1):	
(4) Reason for termination, if applicable:	

By signing this Form entitled "Status of Past and Present Contracts," I am affirming that all of the information provided is true and accurate.

_____ _____
Name Signature

_____ _____
Title Date

Revised. 03/16/2018

Non-Collusion Affidavit

To the Orange County Transportation Authority

In accordance with Title 23 United States Code Section 112 and Public Contract Code 7106 the bidder declares that the bid is not made in the interest of, or on the behalf of, any undisclosed person, partnership, company, association, organization or corporation; that the bid is genuine and not collusive or sham; that the bidder has not directly or indirectly induced or solicited any other bidder to put in a false or sham bid, or that anyone shall refrain from bidding; that the bidder has not in any manner, directly or indirectly, sought by agreement, communication, or conference with anyone to fix the bid price of the bidder or any other bidder, or to fix any overhead, profit, or cost element of the bid price, or of that of any bidder, or to secure any advantage against the public body awarding the contract of anyone interested in the proposed contract; that all statements contained in the bid are true; and, further, that the bidder has not, directly, or indirectly, submitted his or her bid price or any breakdown thereof, or the contents thereof, or divulged information or data relative thereto, or paid, and will not pay, any fee to any corporation, partnership, company association, organization, bid depository, or to any member or agent thereof to effectuate a collusive or sham bid.

Name of Bidder:_____

Signature: _____

Date:_____

IRAN CONTRACTING ACT CERTIFICATION

(California Public Contract Code Sections 2200, *et seq.*)

The Iran Contracting Act of 2010 (PCC Sections 2200-2208), prohibits bidders who are engaged in investment activities in the energy sector of Iran from bidding on, submitting proposals for, or entering into or renewing contracts with public entities for goods or services of one million dollars ($1,000,000) or more. At the time of submitting a bid, each bidder must certify that the bidder is not identified on the Department of General Services list of ineligible persons pursuant to PCC Section 2203(b). Each bidder is also required to certify that the bidder is not engaged in investment activities in violation of the Iran Contracting Act of 2010.

A bidder who is engaged in investment activities in the energy sector of Iran is defined as:

1. A person providing goods or services of twenty million dollars ($20,000,000) or more in the energy sector of Iran, including a person that provides oil or liquefied natural gas tankers, or products used to construct or maintain pipelines used to transport oil or liquefied natural gas, for the energy sector of Iran; or
2. A person that is a financial institution that extends twenty million dollars ($20,000,000) or more in credit to another person, for 45 days or more, if that person will use the credit to provide goods or services in the energy sector in Iran and is identified on a list created pursuant to PCC Section 2203(b).

A bidder is not required to certify that it is engaged in investment activities in the energy sector of Iran if the bidder is exempt from the certification under PCC Section 2203(c) or (d). If the bidder is exempt from the certification requirement, the bidder will be required to provide documentation demonstrating the exemption.

To comply with the Iran Contracting Act of 2010, the bidder shall complete **one** of the options below. Please note: under PCC Section 2205, false certification of this form may result in civil penalties of $250,000 or twice the amount of the contract for which false certification was made, termination of the contract, and/or ineligibility to bid on contracts for a period of three years.

Option No. 1: Certification

I, the official named below, certify I am duly authorized to execute this certification on behalf of the vendor/financial institution identified below, and the vendor/financial institution identified below, and any subcontractor who will perform work or labor or render services to the vendor identified below, is not on the current Department of General Services list identifying persons engaged in investment activities in the energy sector of Iran, and is not a financial institution extending twenty million dollars ($20,000,000) or more in credit to another person/vendor, for 45 days or more, if that other person/vendor will use the credit to provide goods or services in the energy sector in Iran and is identified on the current Department of General Services list identifying persons engaged in investment activities in the energy sector of Iran.

Vendor/Financial Institution:_____

Signature: _____

Name and Title: _____

Date: _____

Option No. 2: Exemption

Pursuant to PCC Section 2203(c) and (d), a public entity may permit a bidder or financial institution engaged in investment activities in Iran, on a case-by-case basis, to be eligible for, or to bid on, submit proposals for, or enter into or renew a contract with a public entity for goods or services of one million dollars ($1,000,000) or more. If the bidder, financial institution, or any subcontractor who will perform work or labor or render services to the bidder has obtained an exemption from the certification requirement, please complete and sign below and attach the documentation demonstrating the exemption approval.

Vendor/Financial Institution:_____

Signature: _____

Name and Title: _____

Date: _____

Option No. 3: Non-Applicability

Pursuant to PCC Section 2203(b), a bidder or financial institution engaged in investment activities in Iran may not be eligible for, or to bid on, submit proposals for, or enter into or renew a contract with a public entity for goods or services of one million dollars ($1,000,000) or more. If the contract is not for goods or services of one million dollars ($1,000,000) or more, please sign below indicating that the contract is not for goods or services of one million dollars ($1,000,000) or more and thus bidder is not required to certify and does not meet the exemption.

Vendor/Financial Institution:_____

Signature: _____

Name and Title: _____

Date: _____